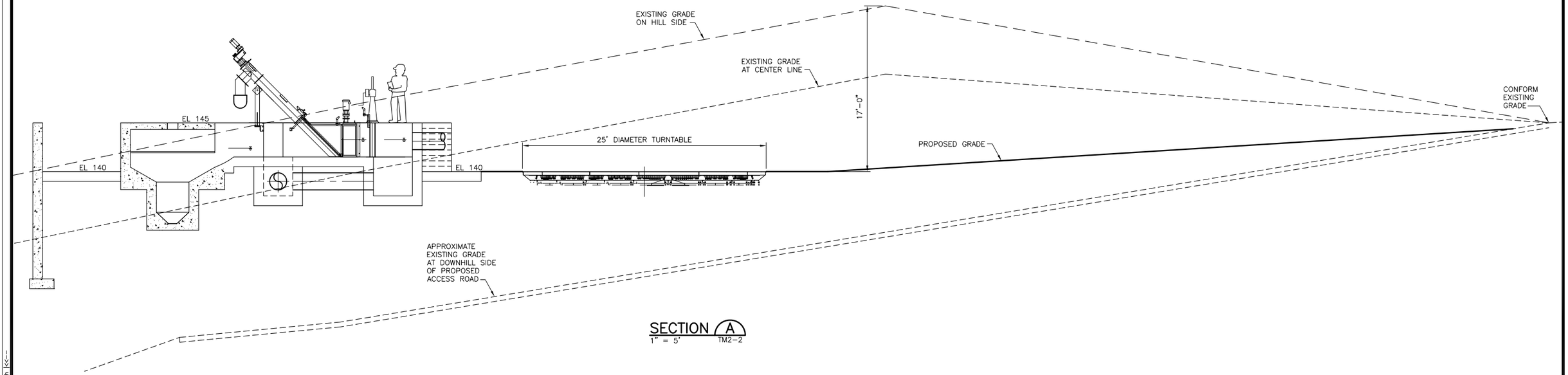

SECTION A
1" = 5' TM2-2

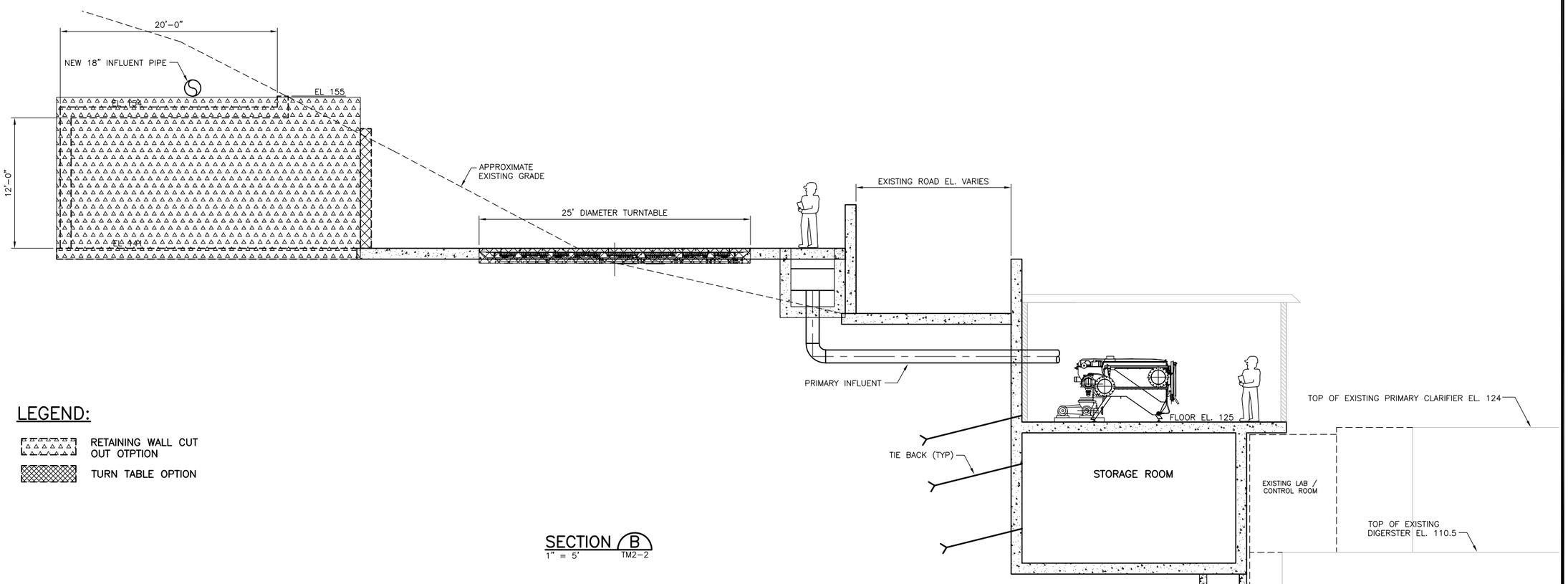

LEGEND:

RETAINING WALL CUT OUT OTPTION

TURN TABLE OPTION

SECTION B
1" = 5' TM2-2

0" 1"
VERIFY SCALES
BAR IS ONE INCH LONG ON FULL SIZE DRAWING. IF NOT ONE INCH LONG ON THIS DRAWING, ADJUST SCALES ACCORDINGLY

RMC Water and Environment

REV	DATE	BY	APVD	DESCRIPTION

DESIGNED D. Gellerman
DRAWN C. To
CHECKED

SUBMITTED: RMC PROJ ENGR
APPROVED: RMC ENGR

SAUSALITO - MARIN CITY SANITARY DISTRICT

HILLSIDE PROCESS OPTION - SECTIONS
COMPACT PRIMARY

DWG NO TM2-3
SHEET NO OF
PROJ NO 055-003
DATE OCTOBER 2011

FILENAME: 0055-003-HP1 10-12-11 12:38am mtakemoto || XREFS: X-SMCSD-TBLK | X-Treatment Plant Site Plan | 0055-003-H2 | Pk Mechanical Drawings | X-Tapo 664HR | X-h150Sarch |<<--

Last Saved By: mtakemoto 8-22-11 10:46am