SAUSALITO - MARIN CITY SANITARY DISTRICT

TREATMENT AND WET WEATHER FLOW UPGRADE

PROJECT NO. 0055-006

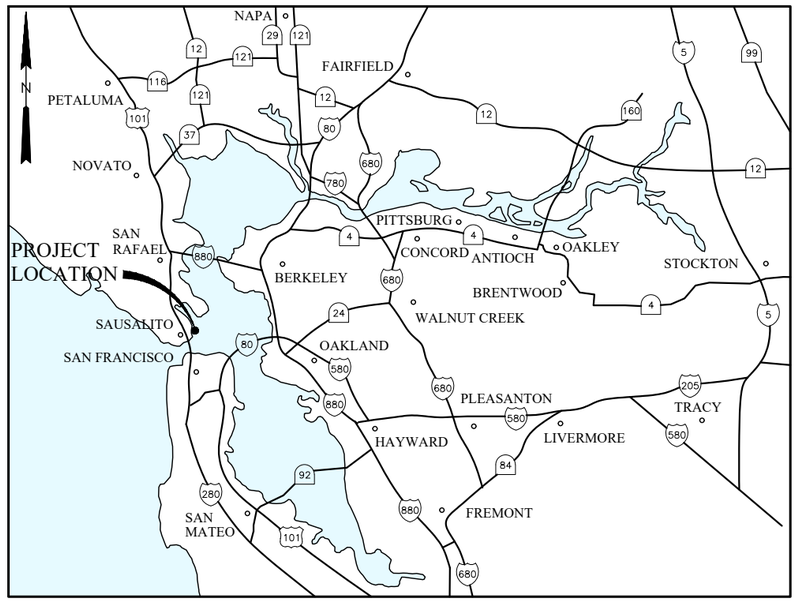

VICINITY MAP
NTS

CONTRACT DRAWINGS

VOLUME 3

NOVEMBER 2016

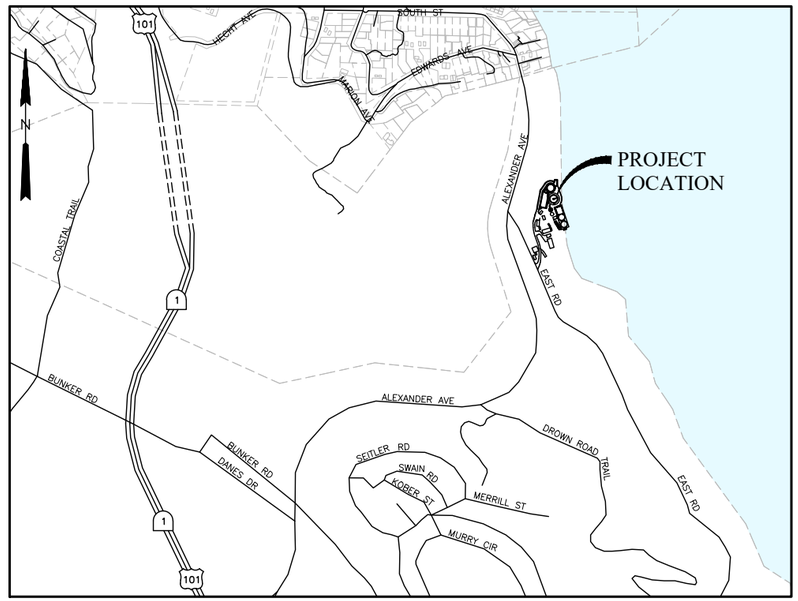

LOCATION MAP
SCALE: 1"=2000'

BID SET

RMC water and environment

TJC and ASSOCIATES, INC.

DTN ENGINEERS, INC.

FILENAME: 0055-006-Cover 11-11-16 11:04am CTo || XREFS: |<<--

Last Saved By: mtakemoto 11-11-16 08:53am

INDEX OF DRAWINGS

Sheet No.	Dwg. No.	Drawing Title
		GENERAL
1		COVER, VICINITY MAP AND LOCATION MAP
2	G-1	INDEX OF DRAWINGS
3	G-2	ABBREVIATIONS AND SYMBOLS
4	G-3	OVERALL PROCESS FLOW SCHEMATIC
5	G-4	DESIGN CRITERIA
6	G-5	HYDRAULIC PROFILE
7	G-6	PIPE SCHEDULE AND LEGENDS
8	G-7	EXISTING SITE PLAN
9	G-8	STAGING AREA LOCATIONS
		DEMOLITION
10	D-1	DEMOLITION LEGEND AND NOTES
11	D-2	OVERALL SITE DEMOLITION PLAN
12	D-3	DEMOLITION ENLARGED PLAN
13	D-4	ENERGY DISSIPATION STRUCTURE DEMOLITION DETAILS
14	D-5	EXISTING PRIMARY CLARIFIER DEMOLITION PLAN – 1
15	D-6	EXISTING PRIMARY CLARIFIER DEMOLITION PLAN – 2
16	D-7	DEWATERING BUILDING DEMOLITION PLAN
17	D-8	DEWATERING BUILDING DEMOLITION SECTIONS
18	D-9	DIESEL TANK AND GAS PURIFIER DEMOLITION
19	D-10	MISC DEMOLITION DETAILS
20	D300-1	FFR PUMP DEMOLITION PLAN
21	D300-2	FFR MEDIA DEMOLITION PLAN
22	D300-3	FFR MEDIA DEMOLITION SECTIONS
23	D300-4	FFR PIPING DEMOLITION SECTIONS
24	D400-1	SAND FILTERS DEMOLITION PLAN & SECTIONS – 1
25	D400-2	SAND FILTERS DEMOLITION PLAN & SECTIONS – 2
26	D400-3	SAND FILTERS DEMOLITION DETAILS
27	D600-1	UTILITY WATER PUMP STATION DEMOLITION PLAN
28	D600-2	SAMPLE PUMP NO. 5 DEMOLITION PLAN AND DETAILS
		CIVIL
29	C-1	CIVIL LEGEND & NOTES
30	C-2	CIVIL STANDARD DETAILS – 1
31	C-3	CIVIL STANDARD DETAILS – 2
32	C-4	CIVIL STANDARD DETAILS – 3
33	C-5	CIVIL STANDARD DETAILS – 4
34	C-6	CIVIL STANDARD DETAILS – 5
35	C-7	CIVIL STANDARD DETAILS – 6
36	C-8	CIVIL STANDARD DETAILS – 7
37	C-9	CIVIL MISCELLANEOUS DETAILS
38	C-20	TEMPORARY INFLUENT SEWER PLAN
39	C-21	TEMPORARY UTILITIES PLAN
40	C100-1	CIVIL SITE GRADING AND PAVING OVERALL PLAN
41	C100-2	CIVIL SITE GRADING AND PAVING PLAN – 1
42	C100-3	CIVIL SITE GRADING AND PAVING PLAN – 2
43	C100-4	TEMPORARY STAIRS
44	C110-1	GEOTECHNICAL SOIL NAIL UPPER WALL PROFILES
45	C110-2	GEOTECHNICAL SOIL NAIL LOWER WALL PROFILES
46	C110-3	SOIL NAIL ADMIN WALL PROFILE
47	C110-4	GEOTECHNICAL SOIL NAIL WALL DETAILS
48	C200-1	CIVIL YARD PIPING PLAN
49	C200-2	PIPE PROFILES – 1
50	C200-3	PIPE PROFILES – 2
51	C200-4	INFLUENT SEWER TEMPORARY BYPASS PLAN AND SECTIONS
		CATHODIC PROTECTION
52	CP-1	CORROSION CONTROL DETAILS
53	CP-2	CORROSION CONTROL DETAILS
54	CP-3	CONCRETE REPAIR AND LINING DETAILS
55	CP-4	CONCRETE REPAIR AND LINING DETAILS
56	CP-5	CONCRETE REPAIR AND LINING DETAILS
		ARCHITECTURAL
57	A100-1	HEADWORKS/GRIT AND EQ BASIN ARCHITECTURAL FLOOR PLAN
58	A100-2	HEADWORKS/GRIT AND EQ BASIN ARCHITECTURAL FLOOR PLAN
59	A100-3	HEADWORKS/GRIT AND EQ BASIN ARCHITECTURAL ELEVATIONS
60	A100-4	HEADWORKS/GRIT AND EQ BASIN ARCHITECTURAL ELEVATIONS
61	A100-5	HEADWORKS/GRIT AND EQ BASIN SECTIONS AND DETAILS
62	A100-6	HEADWORKS/GRIT AND EQ BASIN SCHEDULES AND DETAILS
63	A200-1	PRIMARY CLARIFIER ARCHITECTURAL ELEVATIONS
		LANDSCAPING
64	L1	LANDSCAPE CONSTRUCTION AND PLANTING PLAN
65	L1-1	PLANTING PLAN
66	L1-2	IRRIGATION PLAN
67	L1-3	IRRIGATION PLAN
68	L10-1	TREE REMOVAL PLAN
69	L10-2	TREE REMOVAL PLAN
70	L10-3	TREE PRESERVATION PLAN
71	L10-4	TREE PRESERVATION PLAN
72	L20-1	WALL ELEVATION
73	L20-2	WALL ELEVATION
74	L20-3	WALL ELEVATION
75	L20-4	CONSTRUCTION DETAILS
76	L20-5	CONSTRUCTION DETAILS
77	L20-6	PLANTING DETAILS
78	L30-1	IRRIGATION DETAILS

Sheet No.	Dwg. No.	Drawing Title
		STRUCTURAL
79	S-1	GENERAL NOTES
80	S-2	GENERAL NOTES
81	S-3	ABBREVIATIONS & STANDARD DETAILS
82	S-4	STANDARD DETAILS
83	S-5	STANDARD DETAILS
84	S-6	STANDARD DETAILS
85	S-7	STANDARD DETAILS
86	S-8	STANDARD DETAILS
87	S-9	STANDARD DETAILS
88	S-10	STANDARD DETAILS
89	S-11	STANDARD DETAILS
90	S-12	STANDARD DETAILS
91	S-13	STANDARD DETAILS
92	S-14	STANDARD DETAILS
93	S-15	STANDARD DETAILS
94	S-16	MISCELLANEOUS STAIRS
95	S-17	STAIR SECTIONS
96	S030-1	VIEWING AREA
97	S100-1	EQ BASIN – FOUNDATION PLAN EL 4.17
98	S100-2	HEADWORKS/EQ BASIN FOUNDATION PLAN EL 29.50
99	S100-3	HEADWORKS/EQ BASIN INTERMEDIATE PLAN EL 42.50
100	S100-4	HEADWORKS/EQ BASIN TOP PLAN EL 44.50
101	S100-5	HEADWORKS/EQ BASIN SECTION A
102	S100-6	HEADWORKS/EQ BASIN SECTION B
103	S100-7	HEADWORKS/EQ BASIN SECTIONS C & D
104	S100-8	HEADWORKS/EQ BASIN SECTIONS E & F
105	S100-9	HEADWORKS/EQ BASIN SECTIONS G & H
106	S100-10	HEADWORKS/EQ BASIN SECTIONS J & K
107	S100-11	HEADWORKS/EQ BASIN SECTIONS & DETAILS
108	S200-1	PRIMARY CLARIFIER NO. 2 FOUNDATION AND TOP PLANS
109	S200-2	PRIMARY CLARIFIER NO. 2 SECTIONS AND DETAIL
110	S400-1	EFFLUENT FILTERS PLAN
111	S400-2	EFFLUENT FILTERS SECTIONS
112	S400-3	MISCELLANEOUS STAIRS
		MECHANICAL
113	M-1	MECHANICAL LEGEND AND SCHEDULE
114	M-2	MECHANICAL STANDARD DETAILS – 2
115	M-3	MECHANICAL STANDARD DETAILS – 3
116	M-4	MECHANICAL STANDARD DETAILS – 4
117	M-5	MECHANICAL STANDARD DETAILS – 5
118	M-6	MECHANICAL STANDARD DETAILS – 6
119	M-7	MECHANICAL STANDARD DETAILS – 7
120	M-8	MECHANICAL STANDARD DETAILS – 8
121	M-9	MECHANICAL STANDARD DETAILS – 9
122	M-10	MECHANICAL STANDARD DETAILS – 10
123	M-20	ODOR CONTROL SCHEMATIC
124	M100-1	OVERALL SITE PLAN
125	M100-2	HEADWORKS AND EQ BASIN FOUNDATION PLAN
126	M100-3	HEADWORKS AND EQ BASIN LOWER PLAN EL 25.0
127	M100-4	HEADWORKS AND EQ BASIN PLAN EL 43.0
128	M100-5	HEADWORKS AND EQ BASIN TOP PLAN
129	M100-6	HEADWORKS AND EQ BASIN ENLARGED PLAN AT EL 43.00
130	M100-7	HEADWORKS/PRIMARY – SECTION 1
131	M100-8	HEADWORKS – SECTION 1
132	M100-9	HEADWORKS – SECTION 2
133	M100-10	HEADWORKS – SECTION 3
134	M100-11	HEADWORKS – SECTION 4
135	M100-12	HEADWORKS – SECTION 5
136	M100-13	HEADWORKS – SECTION 6
137	M100-14	HEADWORKS – SECTION 7
138	M100-15	HEADWORKS – SECTION 8
139	M100-16	HEADWORKS – SECTION 9
140	M100-17	HEADWORKS – SECTION 10
141	M100-18	HEADWORKS DETAILS
142	M110-1	ILLUSTRATIVE ISOMETRIC VIEWS – 1
143	M110-2	ILLUSTRATIVE ISOMETRIC VIEWS – 2
144	M110-3	ILLUSTRATIVE ISOMETRIC VIEWS – 3
145	M200-1	PRIMARY CLARIFIER NO. 2 – TOP PLAN
146	M200-2	PRIMARY CLARIFIER NO. 2 – BOTTOM PLAN
147	M200-3	PRIMARY CLARIFIER SECTION
148	M200-4	PRIMARY CLARIFIER DETAILS – 1
149	M200-5	PRIMARY CLARIFIER DETAILS – 2
150	M200-6	SCUM PIT AND EFFLUENT BOX PARTIAL PLAN AND SECTIONS
151	M210-1	PRIMARY SLUDGE/SCUM PUMPS – PARTIAL PLAN AND SECTIONS
152	M210-2	PRIMARY SLUDGE/SCUM PUMPS – PARTIAL PLAN AND SECTIONS
153	M300-1	FFR PUMP PLAN AND SECTION
154	M300-2	DIVERSION BOX PLAN AND SECTION
155	M300-3	FIXED FILM REACTOR SECTION
156	M400-1	EFFLUENT FILTERS FOUNDATION PLAN
157	M400-2	EFFLUENT FILTERS INTERMEDIATE PLAN
158	M400-3	EFFLUENT FILTERS TOP PLAN
159	M400-4	EFFLUENT FILTERS SECTIONS
160	M400-5	EFFLUENT FILTERS SECTIONS
161	M400-6	EFFLUENT FILTERS SECTIONS
162	M500-1	RECYCLE BOX PLAN AND SECTIONS
163	M600-1	UTILITY WATER PUMP STATION PLAN AND SECTION
164	M600-2	UTILITY WATER PUMP STATION SECTION

Sheet No.	Dwg. No.	Drawing Title
		ELECTRICAL
165	E-1	LEGEND AND GENERAL NOTES
166	E-2	MAIN SINGLE-LINE DIAGRAM MCC HW ELEVATION
167	E-3	MCC-HW SINGLE-LINE DIAGRAM
168	E-4	FFR SUPPLY PUMPS MODIFICATIONS
169	E-5	FILTER FEED PUMP CONTROL CONTROL SCHEMATIC & PANEL
170	E-6	CONTROL SCHEMATIC DIAGRAMS SHEET 1 OF 4
171	E-7	CONTROL SCHEMATIC DIAGRAMS SHEET 2 OF 4
172	E-8	CONTROL SCHEMATIC DIAGRAMS SHEET 3 OF 4
173	E-9	CONTROL SCHEMATIC DIAGRAMS SHEET 4 OF 4 AND PANEL BOARD SCHEDULE
174	E-10	CONTROL ONE-LINE DIAGRAMS SHEET 1 OF 2
175	E-11	CONTROL ONE-LINE DIAGRAMS SHEET 2 OF 2
176	E-12	SCADA PLC WIRING DIAGRAMS PLC-HW SHEET 1 OF 4
177	E-13	SCADA PLC WIRING DIAGRAMS PLC-HW SHEET 2 OF 4
178	E-14	SCADA PLC WIRING DIAGRAMS PLC-HW SHEET 3 OF 4
179	E-15	SCADA PLC WIRING DIAGRAMS PLC-HW SHEET 4 OF 4
180	E-15A	SCADA PLC WIRING DIAGRAMS PLC-GEN SHEET 1 OF 2
181	E-15B	SCADA PLC WIRING DIAGRAMS PLC-GEN SHEET 2 OF 2
182	E-16	SCADA PLC WIRING DIAGRAM INTERNAL POWER DISTRIBUTION
183	E-17	CABLE AND CONDUIT SCHEDULE SHEET 1 OF 3
184	E-18	CABLE AND CONDUIT SCHEDULE SHEET 2 OF 3
185	E-19	CABLE AND CONDUIT SCHEDULE SHEET 3 OF 3
186	E-20	LIGHTING FIXTURE SCHEDULE AND LIGHTING CONTROL AND EYEWASH CONTROL PANEL
187	E-21	FIRE ALARM – ELECTRICAL ROOM
188	E-22	CONSTRUCTION DETAILS SHEET 1 OF 3
189	E-23	CONSTRUCTION DETAILS SHEET 2 OF 3
190	E-24	CONSTRUCTION DETAILS SHEET 3 OF 3
191	E-25	PARTIAL SITE PLAN – THICKENER, SEC. DIGESTER & GEN. BLDG.
192	E-26	ELECT. SEQUENCE OF WORK AND TEMP. POWER DURING CONSTRUCTION
193	E-27	TYPICAL CONSTRUCTION DETAILS SHEET 1 OF 3
194	E-28	TYPICAL CONSTRUCTION DETAILS SHEET 2 OF 3
195	E-29	TYPICAL CONSTRUCTION DETAILS SHEET 3 OF 3
196	E-30	UTILITY WATER PUMP CONTROL DIAGRAM AND CONTROL PANEL
197	E-31	EXISTING MCC-P1 MODIFICATIONS AND RECYCLE PUMPS
198	E-32	UTILITY WATER PUMP DETAIL, RECYCLE PUMP DETAIL AND PLC-6 MODIFICATIONS
199	E-33	EXISTING MAIN PLANT PLC MODIFICATIONS
200	E-34	EXISTING PLC-6 MODIFICATIONS
201	E100-1	OVERALL SITE PLAN
202	E100-2	HEADWORKS ELECTRICAL PARTIAL ENLARGED SITE PLAN
203	E100-3	HEADWORKS/GRIT AND EQ BASIN TOP PLAN – POWER AND SIGNAL
204	E100-4	HEADWORKS/GRIT & EQ BASIN CROSS SECTION DETAIL
205	E100-5	HEADWORKS/GRIT & EQ BASIN BOTTOM PLAN – POWER AND SIGNAL
206	E100-6	EQUALIZATION CROSS SECTION LIGHTING ELEVATION DETAIL
207	E100-7	ELECTRICAL ENLARGED PLAN, MCC ROOM – POWER, LIGHTING AND SIGNAL
208	E200-1	PRIMARY SLUDGE/SCUM PUMPS PARTIAL PLAN AND SECTION
209	E300-1	FIXED FILM REACTOR MODIFICATIONS PLAN – POWER AND SIGNAL
210	E400-1	EFFLUENT FILTERS PLAN – POWER AND SIGNAL
		INSTRUMENTATION AND CONTROLS
211	I-1	INSTRUMENTATION LEGEND AND GENERAL NOTES
212	I-2	INSTRUMENTATION SYMBOLS AND NOTES
213	I-3	SCADA SYSTEM BLOCK DIAGRAM
214	I-4	INSTRUMENTATION TYPICAL DETAILS SHEET 1 OF 2
215	I-5	INSTRUMENTATION TYPICAL DETAILS SHEET 2 OF 2
216	I100-1	P&ID HEADWORKS OVERVIEW
217	I100-2	P&ID SCREENING HANDLING AND TURNTABLE
218	I100-3	P&ID GRIT HANDLING INSTRUMENTATION
219	I100-4	P&ID EQUALIZATION INSTRUMENTATION
220	I100-5	P&ID FERRIC CHLORIDE SYSTEM AND DIESEL FUEL TANK
221	I200-1	P&ID PRIMARY CLARIFIER #2 AND SLUDGE/SCUM PUMPING
222	I300-1	P&ID FIXED FILM REACTOR SUPPLY PUMPING
223	I400-1	P&ID TERTIARY FILTER PUMPING
224	I400-2	P&ID TERTIARY FILTER PACKAGES
225	I500-1	P&ID RECYCLE PUMP STATION
226	I600-1	P&ID UTILITY WATER PUMP STATION

SELECT REFERENCE DRAWINGS (AVAILABLE IN ELECTRONIC PDF FORMAT ONLY)

1952 SMCSD SEWAGE PUMPING AND TREATMENT WORKS
1972 SMCSD WASTE TREATMENT AND DISPOSAL FACILITIES
1988 SMCSD WASTEWATER PLANT IMPROVEMENTS C-06-2464 RECORD DRAWINGS
1990 SMCSD WASTEWATER PLANT IMPROVEMENTS EFFLUENT FILTERS
1997 SMCSD BEACH FORCEMAIN REPLACEMENT
2008 SMCSD SLUDGE DEWATERING PROEJCT

REGISTERED PROFESSIONAL ENGINEER MARK W. TAKEMOTO No. 64369 Exp. 06-30-17 CIVIL STATE OF CALIFORNIA

0" 1" — VERIFY SCALES — BAR IS ONE INCH LONG ON FULL SIZE DRAWING. IF NOT ONE INCH LONG ON THIS DRAWING, ADJUST SCALES ACCORDINGLY

RMC water and environment

REV	DATE	BY	APVD	DESCRIPTION

DESIGNED M. TAKEMOTO
DRAWN S. JUNG
CHECKED M. NAKAMOTO

SUBMITTED: MARK TAKEMOTO, RMC PROJECT ENGINEER CE-64369
APPROVED: STEVE CLARY, RMC ENGINEER CE-30318

SAUSALITO - MARIN CITY SANITARY DISTRICT

TREATMENT AND WET WEATHER FLOW UPGRADE

INDEX OF DRAWINGS

DWG NO G-1
SHEET NO 2 OF 226
PROJ NO 055-006
DATE NOVEMBER 2016

FILENAME: 0055-006-G-1 11-22-16 03:32pm C:\o || XREFS: X-SMCSD-TBLK | M:\takemoto-PE-stamp |<<--
Last Saved By: smasuda 11-22-16 03:26pm

ABBREVIATIONS

@	AT
AB	ANCHOR BOLT, AGGREGATE BASE
ABC	AGGREGATE BASE COURSE (CALTRANS CLASS 2 AGGREGATE BASE)
ABS	ACRYLONITRILE–BUTADIENE– STYRENE
AC	ASBESTOS CEMENT, ASPHALTIC CONCRETE
AC/HR	AIR CHANGES PER HOUR
ACI	AMERICAN CONCRETE INSTITUTE
ADH AB	ADHESIVE ANCHOR BOLT
ADJ	ADJACENT, ADJUSTABLE
AISC	AMERICAN INSTITUTE OF STEEL CONSTRUCTION
AL	ALUMINUM
ALT	ALTERNATE
ANSI	AMERICAN NATIONAL STANDARDS INSTITUTE
APPROX	APPROXIMATE
ARCH.	ARCHITECTURAL
ARV	AIR RELEASE VALVE
AUX	AUXILIARY
AWG	AMERICAN WIRE GAGE
AWT	ADVANCED WASTE TREATMENT
BC	BOLT CIRCLE, BEGIN CURVE
BD	BOARD
BF	BLIND FLANGE, BOTTOM FLAT
BFV	BUTTERFLY VALVE
BGS	BELOW GROUND SURFACE
BLDG	BUILDING
BM	BENCH MARK, BEAM
BO	BLOWOFF
BOT	BOTTOM
BRG	BEARING
BS	BUTT STRAP
BV	BALL VALVE
BVC	BEGINNING OF VERTICAL CURVE
C	CHANNEL (BEAM)
CAV	COMBINATION AIR AND VACUUM VALVE
CB	CATCH BASIN
CDF	CONTROLLED DENSITY FILL
CFM	CUBIC FEET PER MINUTE
CFS	CUBIC FEET PER SECOND
CHEM	CHEMICAL
CIP	CAST IRON PIPE
CIRC	CIRCUMFERENTIAL
CJ	CONSTRUCTION JOINT
CLR	CLEAR
CLS	CHLORINE SOLUTION HYPOCHLORITE
CLSM	CONTROLLED LOW STRENGTH MATERIAL
℄	CENTERLINE
CMP	CORRUGATED METAL PIPE
CMU	CONCRETE MASONRY UNIT
CO	CLEANOUT
COL	COLUMN
COMP	COMPRESSOR(S)
CONC	CONCRETE, CONCENTRIC
COND	CONDUIT
CONN	CONNECTION
CONT	CONTINUOUS
COORD	COORDINATE
CPLG	COUPLING
CPVC	CHLORINATED POLYVINYL CHLORIDE
CT	CERAMIC TILE
CTD	CENTERED
CTJ	CONTROL JOINT
CTR	CENTER
CTS	CORROSION TEST STATION
C TO C	CENTER TO CENTER
CU	CUBIC
CU FT	CUBIC FOOT
CU IN.	CUBIC INCH
CU YD	CUBIC YARD
CV	CHECK VALVE
°C	DEGREE CELSIUS
d	PENNY (NAIL SIZE)
D	DRAIN
DBL	DOUBLE
DET	DETAIL
DFT	DRY FILM THICKNESS
DI	DROP INLET, DUCTILE IRON
DIA	DIAMETER
DIAG	DIAGONAL
DIP	DUCTILE IRON PIPE
DIR	DIRECTION
DN	DOWN
DWG	DRAWING

E	EAST
EA	EACH
EC	END CURVE
ECB	EROSION CONTROL BLANKET
ECC	ECCENTRIC
EF	EACH FACE, EXHAUST FAN
EL, ELEV	ELEVATION
ELEC	ELECTRIC, ELECTRICAL
ELL	ELBOW
ENGR	ENGINEER
EO	EMERGENCY OVERFLOW
EP	EDGE OF PAVEMENT
EQ	EQUAL
EQPT	EQUIPMENT
EQ SP	EQUALLY SPACED, EQUAL SPACES
ESMT	EASEMENT
EVC	END OF VERTICAL CURVE
EW	EACH WAY
EWEF	EACH WAY, EACH FACE
EXC	EXCAVATE
EXH	EXHAUST
EXP	EXPOSED
EXP JT	EXPANSION JOINT
EXST	EXISTING
FA	FOUL AIR
FAB	FABRICATION
FC	FLEXIBLE COUPLING
FCA	FLANGED COUPLING ADAPTER
FCO	FLOOR CLEAN OUT
FD	FLOOR DRAIN
FDS	FINAL DIGESTED SLUDGE
FDN	FOUNDATION
FE	FLANGED END, FINAL EFFLUENT
FEXT	FIRE EXTINGUISHER
FF	FINISH FLOOR
FG	FINISH GRADE
FHY	FIRE HYDRANT
FI	FILTER INFLUENT
FIG.	FIGURE
FL	FLOOR
℄	FLOW LINE
FLG	FLANGE
FLH	FLAT HEAD
FLTR	FILTER
FM	FORCE MAIN
FO	FIBER OPTIC
FOC	FACE OF CONCRETE, FIBER OPTIC CABLE
FOCC	FIBER OPTIC CABLE CONDUIT
FOR	FUEL OIL RETURN
FOS	FUEL OIL SUPPLY
FRP	FIBERGLASS REINFORCED PLASTIC
FT	FOOT OR FEET
FTG	FOOTING
FUT	FUTURE
FWD	FORWARD
°F	DEGREE FAHRENHEIT
GA	GAGE
GAL	GALLON
GALV	GALVANIZED
GC	GROOVED COUPLING
GCO	GRADE CLEAN OUT
GE	GROOVED END
GL	GLASS
GPD	GALLONS PER DAY
GPH	GALLONS PER HOUR
GPM	GALLONS PER MINUTE
GSP	GALVANIZED STEEL PIPE
GV	GATE VALVE
GVL	GRAVEL
HD	HUB DRAIN
HDG	HOT DIP GALVANIZED
HDPE	HIGH DENSITY POLYETHYLENE, HDPE PIPE
HDR	HEADER
HDW	HARDWARE
HGT	HEIGHT
HM	HOLLOW METAL
HORIZ	HORIZONTAL
HP	HORSEPOWER
HR	HOSE RACK, HANDRAIL, HOUR
HV	HOSE VALVE
HWR	HOT WATER RETURN
HWS	HOT WATER SUPPLY
H2E	HOOK TWO ENDS
ID	INSIDE DIAMETER
IF.	INSIDE FACE
IJTS	INSULATING JOINT TEST STATION
IN.	INCH
INFL	INFLUENT
INSTM	INSTRUMENTATION
INSUL	INSULATE
INVT	INVERT
IRR, IRRIG	IRRIGATION
IE	INVERT ELEVATION

JT	JOINT
KIP	THOUSAND POUNDS
KW	KILOWATT
L	ANGLE, LENGTH
LAB	LABORATORY
LAV	LAVATORY
LB	POUNDS
LB/CU FT	POUNDS PER CUBIC FOOT
LF	LINEAR FEET
LONG.	LONGITUDINAL
LP	LOW PRESSURE
LR	LONG RADIUS
LT	LEFT
MAG	MAGNETIC
MATL	MATERIAL
MAX	MAXIMUM
MCC	MOTOR CONTROL CENTER
MECH	MECHANICAL
MFR	MANUFACTURER
MGD	MILLION GALLONS PER DAY
MH	MANHOLE
MIN	MINIMUM
MISC	MISCELLANEOUS
MJ	MECHANICAL JOINT
ML	MIXED LIQUOR
MLCSP	MORTAR LINED AND COATED STEEL PIPE
MSNRY	MASONRY
MO	MASONRY OPENING
MT	MITER
MTR	METER
MTS	MILL TYPE STEEL PIPE
MWS	MAXIMUM WATER SURFACE
N	NORTH
NIC	NOT IN CONTRACT
NO.	NUMBER
NPT	NATIONAL PIPE THREAD
NTS	NOT TO SCALE
OC	ON CENTER
OD	OUTSIDE DIAMETER
OF.	OUTSIDE FACE, OVERFLOW
OSD	OPEN SITE DRAIN
OPNG	OPENING
OZ	OUNCE
PC	POINT OF CURVE
PCC	PORTLAND CEMENT CONCRETE, POINT OF COMPOUND CURVATURE
PCO	PRESSURE CLEANOUT
PD	PUMPED DRAIN
PE	PLAIN END
PH	POTHOLE
PI	POINT OF INTERSECTION
PL	PLASTIC, PROPERTY LINE, PLATE
℔	PLATE (STEEL)
PLYWD	PLYWOOD
PRC	POINT OF REVERSE CURVE
PREFAB	PREFABRICATED
PRESS.	PRESSURE
PRI	PRIMARY
PROP	PROPERTY
PSF	POUNDS PER SQUARE FOOT
PS	PUMP STATION
PSI	POUNDS PER SQUARE INCH
PSIG	POUNDS PER SQUARE INCH, GAUGE
PT	POINT, POINT OF TANGENCY
PV	PLUG VALVE
PVC	POLYVINYL CHLORIDE PLASTIC, PVC PIPE
PVMT	PAVEMENT
R	RADIUS
RAS	RETURN ACTIVATED SLUDGE
RCP	REINFORCED CONCRETE PIPE
RD	ROOF DRAIN, ROAD
RDCR	REDUCER
RDW	REDWOOD
RECIRC	RECIRCULATION
REF	REFER OR REFERENCE
REINF	REINFORCED, REINFORCING, REINFORCE
REQD	REQUIRED
RM	ROOM
RO	ROUGH OPENING
RPVC	REINFORCED POLYVINYL CHLORIDE
RSFM	RAW SEWAGE FORCE MAIN
RSU	RETURN SUPERNATANT
RT	RIGHT
RTN	RETURN
RV	ROOF VENT
RW	RECYCLED WATER
R/W	RIGHT–OF–WAY

SCFM	STANDARD CUBIC FEET PER MINUTE
SCH	SCHEDULE
SD	STORM DRAIN, SOAP DISPENSER
SE	SECONDARY EFFLUENT
SEC	SECONDARY
SECT	SECTION
SHT	SHEET
SIM	SIMILAR
SL, SLP	SLOPE
SMP	SAMPLE
SOLN	SOLUTION
SP	SPACE OR SPACES
SPEC	SPECIFICATIONS
SPLY	SUPPLY
SQ	SQUARE
SQ FT	SQUARE FOOT
SQ IN	SQUARE INCH
SS	SANITARY SEWER
SST	STAINLESS STEEL
STA	STATION
STD	STANDARD
STL	STEEL, STEEL PIPE
STR	STRAIGHT
STRL	STRUCTURAL
STRUCT	STRUCTURE
SUSP	SUSPEND
SWD	STORM WATER DRAIN
SYMM	SYMMETRICAL
T	TANGENT LENGTH
TAN.	TANGENT
TBG	TUBING
TBM	TEMPORARY BENCH MARK
T&B	TOP AND BOTTOM
TC	TOP OF CURB
TDH	TOTAL DYNAMIC HEAD
TECH	TECHNICAL
TEL	TELEPHONE
TEMP	TEMPERATURE
TF	TOP FACE, TOP FLAT
T&G	TONGUE AND GROOVE
THD	THREAD
THK	THICK
THRU	THROUGH
TOS	TOP OF SLOPE, TOP OF STEEL
TP	TURNING POINT
TRANSF	TRANSFORMER
TRANSV	TRANSVERSE
TW	TOP OF WALL
TYP	TYPICAL
UBC	UNIFORM BUILDING CODE
UD	UNDERDRAIN
UNO	UNLESS NOTED OTHERWISE
USA	UNDERGROUND SERVICES ALERT
UW	UTILITY WATER
V	VENT, VOLT, VALVE
VAC	VACUUM
VAR	VARIOUS
VC	VERTICAL CURVE
VERT	VERTICAL
VPI	VERTICAL POINT OF INTERSECTION
VTR	VENT THRU ROOF
W	WIDE FLANGE (BEAM), WEST, WATER
W/	WITH
WAS	WASTE ACTIVATED SLUDGE
WC	WATER CLOSET
WH	WATER HEATER
WM	WATER METER
WP	WORK POINT
WS	WATER SURFACE, WATER STOP
W SH ST	WEATHERING SHEET STEEL
WSP	WELDED STEEL PIPE
WT	WEIGHT
WTR	WATER
WW	WASHWATER
WWF	WELDED WIRE FABRIC
YD	YARD

NOTES:

1. THIS IS A STANDARD ABBREVIATION SHEET. SOME ABBREVIATIONS THAT APPEAR ON THIS SHEET ARE NOT USED ON THIS PROJECT.
2. FOR PROCESS FLUID ABBREVIATIONS SEE SHEET G–6.

SECTION AND DETAIL IDENTIFICATION

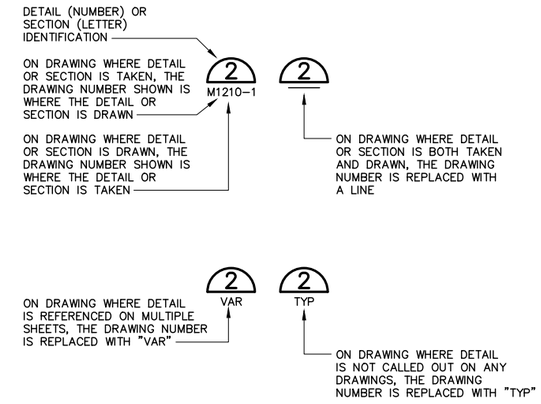

STANDARD DETAIL IDENTIFICATION

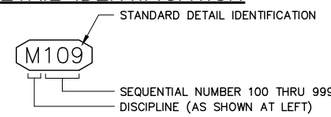

DISCIPLINES:

C	CIVIL
CP	CATHODIC PROTECTION
L	LANDSCAPING AND IRRIGATION
M	MECHANICAL
A	ARCHITECTURAL
E	ELECTRICAL
P	INSTRUMENTATION AND CONTROL
S	STRUCTURAL

NOTE:

STANDARD DETAIL IDENTIFICATIONS ARE SHOWN ON THE PLANS AND ON THE STANDARD DETAIL DRAWINGS. THERE IS NO SPECIFIC CROSS REFERENCING OF DRAWINGS. STANDARD DETAILS ARE INTENDED TO BE TYPICAL AND SHALL APPLY TO ALL SIMILAR SITUATIONS OCCURRING ON THIS PROJECT, WHETHER OR NOT THEY ARE REFERENCED TO IN EACH APPLICABLE LOCATION. CONSULT THE ENGINEER FOR REVIEW OF THE USE OF STANDARD DETAILS PRIOR TO BIDDING.

REGISTERED PROFESSIONAL ENGINEER — MARK W. TAKEMOTO — No. 64369 Exp. 06-30-17 — CIVIL — STATE OF CALIFORNIA

0" 1" — VERIFY SCALES — BAR IS ONE INCH LONG ON FULL SIZE DRAWING. IF NOT ONE INCH LONG ON THIS DRAWING, ADJUST SCALES ACCORDINGLY

RMC water and environment

REV	DATE	BY	APVD	DESCRIPTION

DESIGNED M. TAKEMOTO
DRAWN S. JUNG
CHECKED M. NAKAMOTO

SUBMITTED: MARK TAKEMOTO, RMC PROJECT ENGINEER CE-64369
APPROVED: STEVE CLARY, RMC ENGINEER CE-30318

SAUSALITO · MARIN CITY SANITARY DISTRICT

TREATMENT AND WET WEATHER FLOW UPGRADE

ABBREVIATIONS AND SYMBOLS

DWG NO G-2
SHEET NO 3 OF 226
PROJ NO 055-006
DATE NOVEMBER 2016

FILENAME: 0055-006-G-2 11-11-16 11:05am CTo || XREFS: | X-SMCSD-TBLK | MTakemoto-PE-stamp |<<--

Last Saved By: SJung 10-12-16 03:12pm

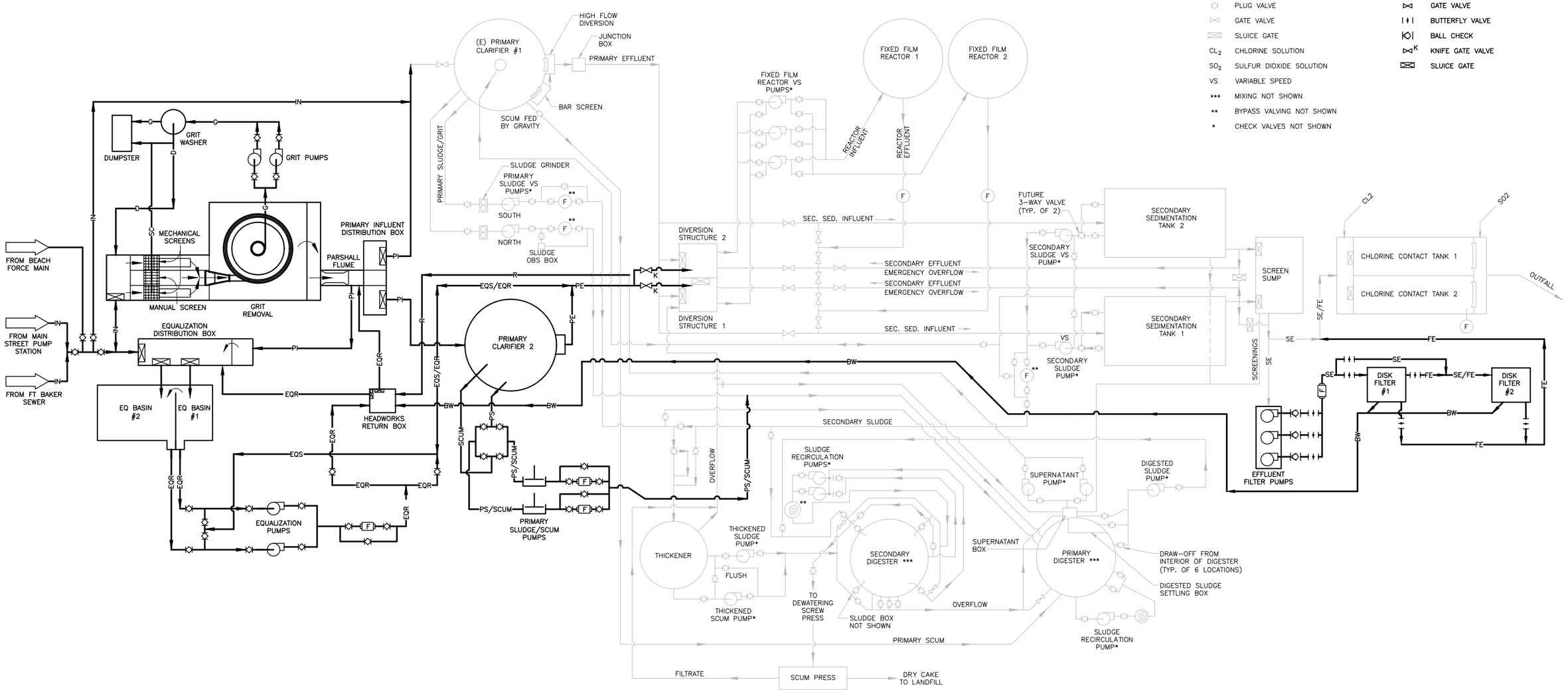

FILENAME: 0055-006-G-3 11-11-16 11:05am CTo | XREFS: | X-SMCSD-TBLK | MTakemoto-PE-stamp |<<--

REGISTERED PROFESSIONAL ENGINEER — MARK W. TAKEMOTO — No. 64369 — Exp. 06-30-17 — CIVIL — STATE OF CALIFORNIA

0" 1" — VERIFY SCALES — BAR IS ONE INCH LONG ON FULL SIZE DRAWING. IF NOT ONE INCH LONG ON THIS DRAWING, ADJUST SCALES ACCORDINGLY

RMC water and environment

REV	DATE	BY	APVD	DESCRIPTION

DESIGNED M. TAKEMOTO
DRAWN C. TO
CHECKED M. NAKAMOTO

SUBMITTED: MARK TAKEMOTO, RMC PROJECT ENGINEER CE-64369
APPROVED: STEVE CLARY, RMC ENGINEER CE-30318

SAUSALITO · MARIN CITY SANITARY DISTRICT

TREATMENT AND WET WEATHER FLOW UPGRADE

OVERALL PROCESS FLOW SCHEMATIC

DWG NO G-3
SHEET NO 4 OF 226
PROJ NO 055-006
DATE NOVEMBER 2016

Last Saved By: CTo 10-17-16 08:42am

Criteria	Value	Units	Criteria	Value	Units	Criteria	Value	Units	Criteria	Value	Units	Criteria	Value	Units
Design Flow			Grit Pumps			EQ Return Pumps			**Secondary Treatment**			Tertiary Filtration		
Average Dry Weather Flow	1.3	MGD	Type	Recessed Impeller	-	Type	Self Priming	-	FFR Feed Pumps			Type	Rotating Disk	-
Peak Day Wet Weather Flow	6	MGD	Number	2	-	Number	2	-	Type	Centrifugal	-	Units	2	-
5-Year Peak Wet Weather Flow (Instantaneous)	12.3	MGD	Capacity (Each Pump)	250	gpm	Capacity (Each)	1390	gpm	Number	3	-	Disks Per Unit	8	-
10-Year Peak Wet Weather Flow (Instantaneous)	13	MGD	TDH	24	ft	TDH	61	feet	Capacity (Each Pump)	3,125	gpm	Filter Area Per Disk	54	ft^2
Headworks			Motor Size	10	HP	Motor Size	40	HP	TDH	62	feet	Nominal Pore Size	10 (Disk Filter No. 1) 5 (Disk Filter No. 2)	micron
Mechanical Screens			Grit Handling			**Primary Treatment**			Motor Size	75	HP	Total Submerged Filter Area	861	ft^2
Type	Sieve auger screen	-	Type	Fuidized Bed	-	Primary Clarifier			Fixed Film Reactor			Design Loading Rate	2.42	gpm/ft^2
Number	2	-	Number	1	-	Number	2 (1 new/1 existing)	-	Media Type	Cross Flow	-	Maximum Loading Rate	4.84	gpm/ft^2
Openings	0.25	inch	Capacity (1 Unit)	250	gpm	Type	Circular	-	Media Surface Area/Volume	32	ft^2/ft^3	Maximum Backwash (% of average flow)	5	%
Capacity (Each Screen)	3	MGD	Influent Metering			Maximum Design Flow (each)	6 to 7	MGD	Reactor Surface Area (Total, 2 FFRs)	2,514	ft^2	Filter Backwash Pumps		
Manual Screen			Type	Parshall Flume	-	Diameter	55	feet	Media Depth	32	ft	Type	Centrifugal	-
Type	Bar	-	Number	1	-	Side Water Depth	9.5	feet	Volume (Total, 2 FFRs)	81,060	ft^3	Number	4	-
Number	1	-	Throat Width	18	inch	Surface Area (Each Tank)	2,376	ft^2	**Tertiary Treatment**			Capacity (Each Pump)	130	gpm
Screen Opening Width	0.75	inch	**Equalization**			Overflow Rate at Average Dry Weather Flow (1.3 MGD)	631	gpd/ft^2	Filter Feed Pumps			TDH	45	feet
Capacity	10	MGD	EQ Storage Tank			Overflow Rate at 10-Year Peak Wet Weather Flow (13.0 MGD with 2 Units in Service)	2,736	gpd/ft^2	Type	Submersible	-	Motor Size	3	HP
Grit Chamber			Compartments	2	-	Primary Sludge/Scum Pumps			Number	3	-	Turn Table		
Type	Hydraulic Vortex	-	Volume (Total)	0.6	MG	Type	Double Disc	-	Capacity (Each Pump)	2,085	gpm	Diameter	25	feet
Number	1	-	EQ Activated @ Influent Flow of	9	MGD	Number	2	-	TDH	31	feet	Motor Size	2	HP
Diameter	9	ft				Capacity (Each Pump)	100	gpm	Motor Size	20	HP			
Capacity	13	MGD				TDH	20	feet						
						Motor Size	5	HP						

REGISTERED PROFESSIONAL ENGINEER
MARK W. TAKEMOTO
No. 64369
Exp. 06-30-17
CIVIL
STATE OF CALIFORNIA

0" 1"
VERIFY SCALES
BAR IS ONE INCH
LONG ON FULL
SIZE DRAWING.
IF NOT ONE INCH
LONG ON THIS
DRAWING, ADJUST
SCALES ACCORDINGLY

RMC water and environment

REV	DATE	BY	APVD	DESCRIPTION

DESIGNED M. TAKEMOTO
DRAWN S. JUNG
CHECKED M. NAKAMOTO

SUBMITTED: MARK TAKEMOTO
RMC PROJECT ENGINEER CE-64369

APPROVED: STEVE CLARY
RMC ENGINEER CE-30318

SAUSALITO · MARIN CITY SANITARY DISTRICT

TREATMENT AND WET WEATHER FLOW UPGRADE

DESIGN CRITERIA

DWG NO G-4
SHEET NO 5 OF 226
PROJ NO 055-006
DATE NOVEMBER 2016

FILENAME: 0055-006-G-4 11-11-16 11:06am CTo || XREFS:| X-SMCSD-TBLK | MTakemoto-PE-stamp |<<--

Last Saved By: SJung 10-12-16 03:11pm

	Qi INFLUENT FLOW	Qe, EQ FLOW	Qs, SECONDARY PROCESS FLOW	Qr, FFR FLOW	Qf, FFR RECYCLE	Qd, FILTER FEED FLOW	HIGH TIDE LEVEL
MAX PWWF	13.0 MGD	4.0	9.0	9.0 MGD	0.0 MGD	6.0 MGD	8.2 FT
MAX FFR	9.0 MGD	0.0	9.0	9.0 MGD	0.0 MGD	6.0 MGD	8.2 FT
ADWF	1.3 MGD	0.0	1.3	3.0 MGD	1.7 MGD	1.3 MGD	8.2 FT

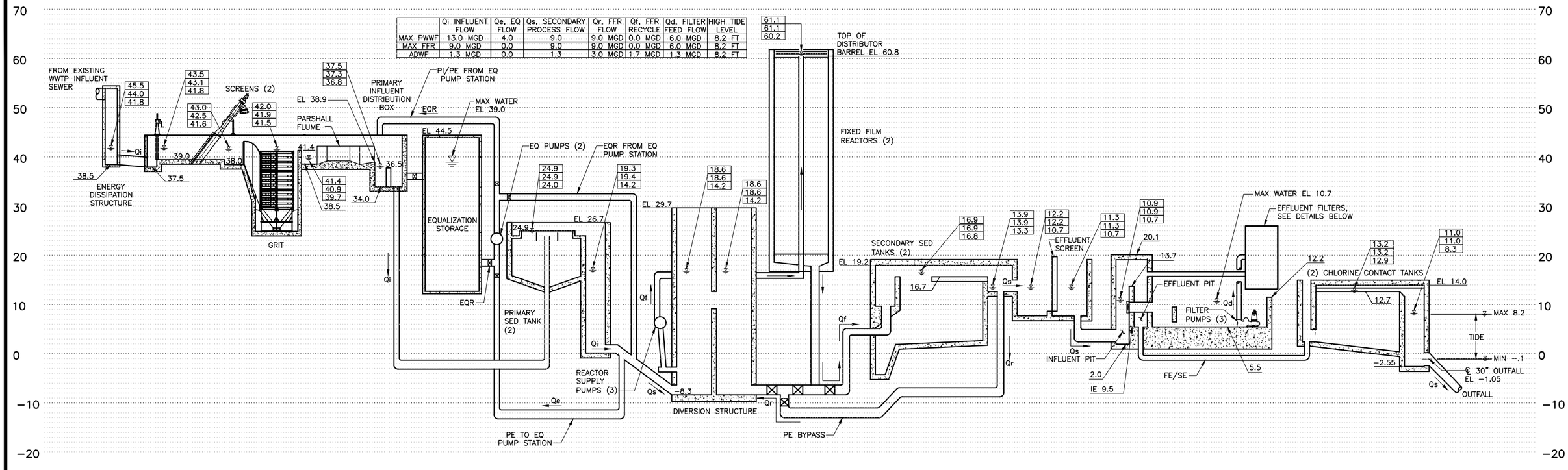

TREATMENT PLANT
HORIZONTAL NTS, VERTICAL 1"=10'

NOTES:

1. HYDRAULIC PROFILE BASED ON EQUALIZATION OF PRIMARY EFFLUENT AT MAX PWWF CONDITION.

	COMBINED TOTAL FLOW
MAX HYDRAULIC CAPACITY	9.0 MGD (2 FILTERS)
MAX FILTER DESIGN FLOW	6.0 MGD (2 FILTERS)
ADWF	1.3 MGD (1 FILTER)

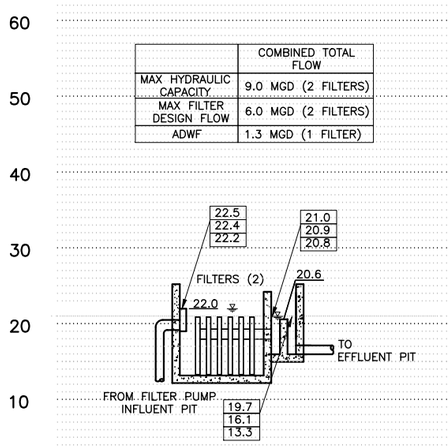

FILTERS IN PARALLEL OPERATION
HORIZONTAL NTS, VERTICAL 1"=10'

	SERIES FILTER FLOW
MAX DESIGN FLOW	3.0 MGD
ADWF	1.3 MGD

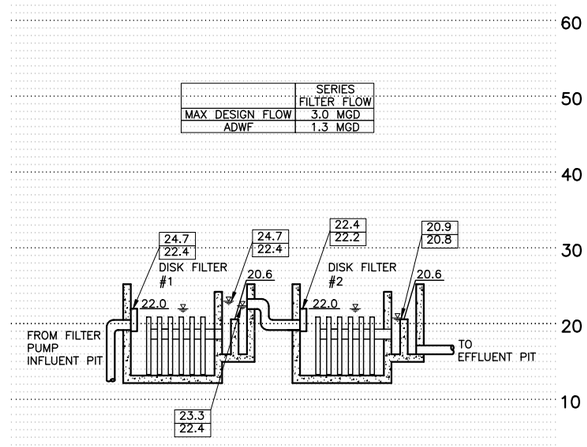

FILTERS IN SERIES OPERATION
HORIZONTAL NTS, VERTICAL 1"=10'

REGISTERED PROFESSIONAL ENGINEER — MARK W. TAKEMOTO — No. 64369 — Exp. 06-30-17 — CIVIL — STATE OF CALIFORNIA

0" 1" — VERIFY SCALES — BAR IS ONE INCH LONG ON FULL SIZE DRAWING. IF NOT ONE INCH LONG ON THIS DRAWING, ADJUST SCALES ACCORDINGLY

RMC water and environment

REV	DATE	BY	APVD	DESCRIPTION

DESIGNED	S. MASUDA
DRAWN	J. MAY
CHECKED	M. NAKAMOTO

SUBMITTED: MARK TAKEMOTO, RMC PROJECT ENGINEER CE-64369

APPROVED: STEVE CLARY, RMC ENGINEER CE-30318

SAUSALITO · MARIN CITY SANITARY DISTRICT

TREATMENT AND WET WEATHER FLOW UPGRADE

HYDRAULIC PROFILE

DWG NO	G-5
SHEET NO	6 OF 226
PROJ NO	055-006
DATE	NOVEMBER 2016

FILENAME: 0055-006-G-5 11-11-16 11:06am CTo || XREFS:| X-SMCSD-TBLK | MTakemoto-PE-stamp |<<--

Last Saved By: SJung 10-12-16 03:13pm

PROCESS FLUID PIPE SCHEDULE

FLUID ABBREV	PROCESS FLUID	Pipe Type (1) Buried	Pipe Type (1) Exposed	Pipe Testing (2) Pressure (PSI)	Pipe Testing (2) Fluid	Special Requirements
1W	POTABLE WATER	41,91	41,91	125	WATER	
2W	NON-POTABLE WATER	NA	NA	NA	NA	
3W	TREATED PLANT EFFLUENT	91,92,96	22,41,91	150	WATER	
AL	ALUM	NA	NA	NA	NA	
BW	EFFLUENT FILTER BACKWASH	91,96	25,27,91,96	50	WATER	
CA	COMPRESSED AIR	NA	NA	NA	NA	
CHA	CHANNEL AIR	NA	45	25	AIR	
CLS	CHLORINE SOLUTION, HYPOCHLORITE	NA	NA	NA	NA	
D	DRAIN	91,93	91	PER SPEC 02640	WATER	
DG	DIGESTER GAS	NA	NA	NA	NA	
DOF	DIGESTER OVERFLOW	NA	NA	NA	NA	
FOR	DIESEL FUEL RETURN	21	21	50	WATER	
FOS	DIESEL FUEL SUPPLY	21	21	50	WATER	
DS	DIGESTED SLUDGE	NA	NA	NA	NA	
DSM	DIGESTED SLUDGE MIXING	NA	NA	NA	NA	
DSR	DIGESTED SLUDGE RETURN	NA	NA	NA	NA	
DSU	DIGESTED SUPERNATANT	NA	NA	NA	NA	
EA	EXHAUST AIR	NA	NA	NA	NA	
EBI	EQUALIZATION BASIN INFLUENT	91,96	25,27,91,96	50	WATER	
EBR	EQUALIZATION BASIN RETURN	91,96	25,27,91,96	50	WATER	
FA	FOUL AIR	61,91,96	61	15	AIR	
FC	FERRIC CHLORIDE	98	91,98	30	WATER	
FDS	FINAL DIGESTED SLUDGE	NA	NA	NA	NA	
FE	FINAL EFFLUENT	91,92,96	25,27,91,96	60	WATER	
FS	FIRE SPRINKLER	NA	NA	NA	NA	
FLE	FILTER EFFLUENT	91,92	25,27,91	25	WATER	
FT	FILTRATE	NA	NA	NA	NA	
G	GRIT	11,25,91	11,25,91	50	WATER	
HRSD	HEATED RECIRCULATED SLUDGE	NA	NA	NA	NA	
HWR	HOT WATER RETURN	NA	NA	NA	NA	
HWS	HOT WATER SUPPLY	NA	NA	NA	NA	
IA	INSTRUMENT AIR	NA	NA	NA	NA	
INF	INFLUENT SEWER	96	96	PER SPEC 02640	WATER	
NG	NATURAL GAS	NA	NA	NA	NA	
OA	OUTSIDE AIR	NA	NA	NA	NA	
OF	OVERFLOW	91,96	91,95	25	WATER	
P	POLYMER	NA	NA	NA	NA	
PD	PUMPED DRAIN	91,96	25,27,91,96	50	WATER	
PDS	PRIMARY DIGESTED SLUDGE	NA	NA	NA	NA	
PE	PRIMARY EFFLUENT	91,92,95	25,27,91,95	60	WATER	
PI	PRIMARY INFLUENT	91,92,95	25,27,91,95	60	WATER	
PS	PRIMARY SLUDGE	91,96	25,27,91,96	60	WATER	
R	PLANT DRAINAGE RETURN	91,96	25,27,91,96	50	WATER	
SB	SODIUM BISULFITE	NA	NA	NA	NA	
SBR	SPENT BACKWASH RETURN	25	91	50	WATER	
SC	SCREENINGS	91	91	25	WATER	
SCUM	SCUM	91	91	100	WATER	
SD	STORM DRAIN	93,97	NA	PER SPEC 02640	WATER	
SE	SECONDARY EFFLUENT	91,92,96	25,27,91,95	50	WATER	
SEP	SEPTAGE	NA	NA	50	WATER	
SG	SLUDGE GAS	NA	NA	NA	NA	
SLUDGE	SLUDGE	NA	NA	NA	NA	
SS	SANITARY SEWER	91,93,96	91,96	PER SPEC 02640	WATER	
SW	SEAL WATER	NA	41, 91	125	WATER	
TS	THICKENED SLUDGE	NA	NA	NA	NA	
TWAS	THICKENED WASTE SLUDGE	NA	NA	NA	NA	
V	VENT	NA	21,91	125	WATER	
WS	WASTE SLUDGE	NA	NA	NA	NA	

JOINT TYPES

BF	BUTT FUSION
BLO	BUTT LAMINATED OVERLAY
BSG	BELL SPIGOT, GASKET
BSW	BELL SPIGOT WELD
BW	BUTT WELD
CJ	COMPRESSION JOINTS
CW	SOCKET WELDED
F	FLANGED
FJ	FLARED JOINTS
GC	GROOVED COUPLING
GTG	GROUTED TONGUE AND GROOVE
MJ	MECHANIAL JOINT
SC	SLEEVE COUPLING
SE	SCREWED ENDS
SJ	SOLDERED JOINTS
SW	SOLVENT WELDED
THD	THREADED

NOTES:
(1) A PIPE MATERIAL SPECIFICALLY DESIGNATED ON THE DRAWINGS SHALL TAKE PRECEDENCE OVER OPTIONAL MATERIALS SHOWN IN THE TABLE. THIS SYMBOL ◆ INDICATES A PIPE MATERIAL CHANGE.

(2) REFER TO SPECIFICATION SECTION 02640 – PIPELINE TESTING AND DISINFECTION FOR HYDRAULIC TESTING REQUIREMENTS AND LEAKAGE ALLOWANCES.

(3) INSPECTION AND TESTING SHALL BE IN ACCORDANCE WITH APPLICABLE PLUMBING CODE.

PIPE MATERIAL SCHEDULE

Pipe Mtl Number	PIPE MATERIAL	Specification Section	Type/ Rating	Joint Type (a) Buried	Joint Type (a) Exposed	SPECIAL THRUST RESTRAINT REQUIREMENTS (NOTE 3)	CORROSION PROTECTION REQUIREMENTS (NOTE 4)
	DUCTILE IRON						
11	DIP, C-151, CML	02565	250	BSG,F	F,GC	MECH. RESTRAINTS OR ANCHOR BLOCKS AT BENDS	CATHODIC PROTECTION
	STEEL PIPE						
21	STEEL, ASTM A53 (<3 INCH)	15025	SCH 40	SC,BW,CW	SC,F,BW,CW		COATING AND CATHODIC PROTECTION
	STEEL, ASTM A53 (3 - 12 INCH)	15025	SCH 40	GC,BSW	F,GC,BW		COATING AND CATHODIC PROTECTION
	STEEL, ASTM A53 (> 12 INCH)	15025	1/4" Wall	GC,BSW	F,GC,BW		COATING AND CATHODIC PROTECTION
22	GALV STEEL, ASTM A106	15025	SCH 40	SE	GC,BW		
23	STEEL, ASTM A106	15025	SCH 80	CW	CW		COATING AND CATHODIC PROTECTION
25	STEEL, AWWA C200, CML&C	02570	1/4" Wall	BSW	F,GC,BW		CORROSION MONITORING OR CATHODIC PROTECTION
27	TEEL, AWWA C200, FUSION BONDED EPOX	02571	1/4" Wall	BSW	F,GC,BW		CORROSION MONITORING OR CATHODIC PROTECTION
	ALLOY						
41	COPPER	15036	Type K	SJ,FJ,CJ,SE	SJ,FJ,CJ,SE		
45	STAINLESS STEEL - 316		SCH 10	BW,SC,F	BW,SC,F		
46	STAINLESS STEEL - 316 (UP TO 2.5 INCH)	15030	SCH 40	SE	SE		
	STAINLESS STEEL - 316 (>3 INCH)	15030	SCH 40	BW,CW	BW,CW,F		
47	STAINLESS STEEL - 304	15030	SCH 10	BW,SC,F	BW,SC,F		
	FRP						
61	FRP DUCTING	02510		BLO	BLO		
	PLASTIC						
91	PVC (1)	15060	SCH 80	SW	SW		
92	PVC C-900,905	02597	DR-18	BSG	BSG	MECH. RESTRAINTS OR ANCHOR BLOCKS AT BENDS	CATHODIC PROTECTION ON ALL METALLIC COMPONENTS
93	PVC GRAVITY SEWER PIPE	02595	SDR-35	BSG	BSG		CATHODIC PROTECTION ON ALL METALLIC COMPONENTS
95	HDPE, SOLID WALL, C-906, DIPS (OD)	02590	DR-21	BF	BF,F		CATHODIC PROTECTION ON ALL METALLIC COMPONENTS
96	HDPE, SOLID WALL, C-906	02590	DR-9	BF	BF,F		CATHODIC PROTECTION ON ALL METALLIC COMPONENTS
98	RPVC TUBING IN PVC CONTAINMENT PIPE	15061	100	SW	SW		

NOTES:
(1) SCH 80 PVC MAY ONLY BE USED FOR PIPE DIAMETERS 10 INCHES AND SMALLER.
(2) THIS SCHEDULE IDENTIFIES CERTAIN THRUST RESTRAINT AND CORROSION PROTECTION REQUIREMENTS, FOR CLARITY. NOT ALL REQUIREMENTS ARE IDENTIFIED. CONTRACTOR SHALL FULLY COMPLY WITH ALL REQUIREMENTS OF THE CONTRACT DOCUMENTS.
(3) MECHANICAL RESTRAINTS PER PIPE SPECIFICATIONS. ANCHOR BLOCKS PER DETAIL C250, C251 AND C252.
(4) CORROSION PROTECTION REQUIREMENTS PER CP DRAWINGS AND SPECIFICATIONS.
(5) STEEL OR DUCTILE IRON PIPE SHALL BE USED AT ALL PENETRATIONS THROUGH CONCRETE STRUCTURES.

PIPING

DOUBLE LINE / SINGLE LINE

- EXISTING PIPE (FUTURE PIPE IF DESIGNATED AS FUTURE)
- EXISTING PIPE TO BE ABANDONED
- EXISTING PIPE TO BE REMOVED
- NEW PIPE
- BUTT WELDED JOINT
- FLANGED JOINT
- GROOVED END JOINT
- HUB & SPIGOT JOINT
- FLEXIBLE COUPLING
- FLANGED COUPLING ADAPTER
- MECHANICAL JOINT
- ELASTOMER BELLOWS EXP JOINT
- ELBOW DOWN
- ELBOW UP
- TEE DOWN
- TEE UP
- LATERAL DOWN
- LATERAL UP
- CONCENTRIC REDUCER
- ECCENTRIC REDUCER
- UNION
- CAP (BUTT WELDED)
- CAP (SCREWED OR SOCKET WELDED)
- ELBOW, 90 DEGREE
- CROSS
- TEE
- ELBOW, 45 DEGREE
- LATERAL
- CHANGE IN PIPE MATERIAL (COUPLING MAY VARY)
- BLIND FLANGE

PIPING DESIGNATION

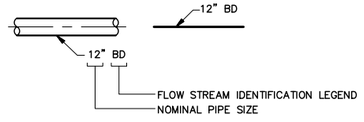

NOTE:
FLOW STREAM IDENTIFICATION LEGEND SHALL BE USED FOR PIPING SCHEDULE SELECTION. ADDITIONAL DESCRIPTION IS USED ONLY TO DESCRIBE THE PROCESS FUNCTION OF THE PIPE. ADDITIONAL DESCRIPTIONS ARE FROM THE STANDARD ABBREVIATIONS DRAWING.

YARD PIPING LEGEND

- 24" FM — FORCEMAIN
- BO — BLOWOFF (PLAN)
- AIR RELEASE VALVE
- 12" SD — STORM DRAIN MAIN
- 8" SS — SANITARY SEWER MAIN
- 8" W — WATER MAIN
- E — ELEC CONDUIT (UNDERGROUND)
- E (O/H) — ELEC CABLES (OVERHEAD)
- T — TELECOM (POSSIBLY FIBRE OPTIC) CONDUIT
- FO — TELECOM/FIBRE OPTIC CONDUIT
- 8" GAS — GAS PIPELINE
- 18" SD?? — EXISTENCE OR SIZE OF UTILITY NOT CONFIRMED (??)
- STORM DRAIN INLET
- MANHOLE
- WATER METER
- FIRE HYDRANT
- WATER VALVE

VALVES

- GATE
- K — KNIFE GATE
- BALL
- GLOBE
- BUTTERFLY
- V — VEE BALL
- ECCENTRIC PLUG
- NEEDLE
- PLUG OR COCK
- BALL CHECK
- SWING OR SILENT CHECK
- DOUBLE DOOR CHECK
- PINCH
- DIAPHRAGM
- HOSE VALVE
- PRESSURE RELIEF
- REGULATED SIDE — PRESSURE CONTROL
- AIR RELIEF VALVE
- AIR AND VACUUM RELIEF VALVE

MISCELLANEOUS PIPING COMPONENTS

- BALANCING DAMPER
- FLEXIBLE (ELASTOMER) PIPE CONNECTION
- WYE–STRAINER
- BASKET STRAINER
- QUICK DISCONNECT COUPLING
- HOSE RACK
- SAFETY SHOWER/EYEWASH
- CO — CLEANOUT
- HD — HUB DRAIN
- FD — FLOOR DRAIN
- F — FLUSHING CONNECTION
- FE BD–1–2 — TYPICAL INSTRUMENT BUBBLE (SEE I&C LEGEND)

GENERAL PIPING NOTES

1. SYMBOLS SHOWN HERE FOR SINGLE LINE FITTINGS ARE SHOWN WITH SOCKET TYPE ENDS. END CONNECTIONS SHALL BE PER SPECIFICATIONS.
2. THIS IS A STANDARD LEGEND SHEET. NOT ALL ITEMS SHOWN ARE USED ON THIS PROJECT.
3. SOME SYMBOLS MAY BE SHOWN DIFFERENTLY ON DRAWINGS AND LABELED ACCORDINGLY.
4. NOT ALL PIPING AND VALVES ARE SHOWN ON THE MECHANICAL DRAWINGS. SEE INSTRUMENTATION AND CONTROL DRAWINGS FOR ADDITIONAL PIPING AND VALVES.

REGISTERED PROFESSIONAL ENGINEER — MARK W. TAKEMOTO — No. 64369 — Exp. 06-30-17 — CIVIL — STATE OF CALIFORNIA

6" — 1" — VERIFY SCALES — BAR IS ONE INCH LONG ON FULL SIZE DRAWING. IF NOT ONE INCH LONG ON THIS DRAWING, ADJUST SCALES ACCORDINGLY

RMC water and environment

REV	DATE	BY	APVD	DESCRIPTION

DESIGNED	M. TAKEMOTO
DRAWN	S. JUNG
CHECKED	M. NAKAMOTO

SUBMITTED: MARK TAKEMOTO, RMC PROJECT ENGINEER CE-64369
APPROVED: STEVE CLARY, RMC ENGINEER CE-30318

SAUSALITO · MARIN CITY SANITARY DISTRICT

TREATMENT AND WET WEATHER FLOW UPGRADE

PIPE SCHEDULE AND LEGENDS

DWG NO	G-6
SHEET NO	7 OF 226
PROJ NO	055-006
DATE	NOVEMBER 2016

FILENAME: 0055-006-G-6 11-11-16 11:07am CTo || XREFS: | X-SMCSD-TBLK | MTakemoto-PE-stamp |<<--

Last Saved By: SJung 10-12-16 03:15pm

N

SCALE: 1"=20'

0 20 40 60

SCALE IN FEET

SAN FRANCISCO BAY

PRIMARY CLARIFIER NO. 1

DEWATERING BLDG

PROCESS LEVEL

FFR

FFR

SAND FILTERS

MAINTENANCE LEVEL

ADMIN BLDG

ADMIN LEVEL

STORAGE LEVEL

LOWER ACCESS ROAD

PLANT ACCESS ROAD

EAST ROAD

FORT BAKER ROAD

ALEXANDER AVENUE

ALEXANDER AVENUE

PLAN
1" = 20'

REGISTERED PROFESSIONAL ENGINEER
MARK W. TAKEMOTO
No. 64369
Exp. 06-30-17
CIVIL
STATE OF CALIFORNIA

0" 1"
VERIFY SCALES
BAR IS ONE INCH
LONG ON FULL
SIZE DRAWING.
IF NOT ONE INCH
LONG ON THIS
DRAWING, ADJUST
SCALES ACCORDINGLY

RMC water and environment

REV	DATE	BY	APVD	DESCRIPTION

DESIGNED M. TAKEMOTO
DRAWN C. TO
CHECKED M. NAKAMOTO

SUBMITTED: MARK TAKEMOTO
RMC PROJECT ENGINEER CE-64369

APPROVED: STEVE CLARY
RMC ENGINEER CE-30318

SAUSALITO · MARIN CITY SANITARY DISTRICT

TREATMENT AND WET WEATHER FLOW UPGRADE

EXISTING SITE PLAN

DWG NO G-7
SHEET NO 8 OF 226
PROJ NO 055-006
DATE NOVEMBER 2016

FILENAME: 0055-006-G-7 11-11-16 11:07am CTo || XREFS: | X-SMCSD-TBLK | X-Topo Survey | X-Treatment Plant site plan | MTakemoto-PE-stamp |<<--

Last Saved By: SJung 10-12-16 03:14pm



STAGING AREAS PLAN
1" = 1700'

NOTES:

1. CONTRACTOR SHALL BE RESPONSIBLE FOR PROVIDING SECURITY FOR STAGING AREAS. THE DISTRICT SHALL NOT BE RESPONSIBLE FOR ANY STOLEN OR DAMAGED EQUIPMENT, MATERIALS, ETC.
2. THE STORAGE YARD AT THE WWTP, JUST DOWNHILL FROM THE ENTRANCE, MAY BE USED FOR CONTRACTOR STAGING AS LONG AS ACCESS IS MAINTAINED FOR DISTRICT STAFF. TEMPORARY RELOCATION OF TOTES, ETC. TO MAKE ROOM FOR LARGE EQUIPMENT MAY BE ACCEPTABLE WITH PRIOR APPROVAL FROM THE CONSTRUCTION MANAGER.
3. THE CONTRACTOR SHALL BE RESPONSIBLE FOR ALL COSTS ASSOCIATED WITH LEASING OR RENTING STAGING AREAS.
4. USE OF STAGING AREAS SHALL CONFORM TO THE REQUIREMENTS OF SECTION 01500.



STAGING AREA A PLAN
NOT TO SCALE

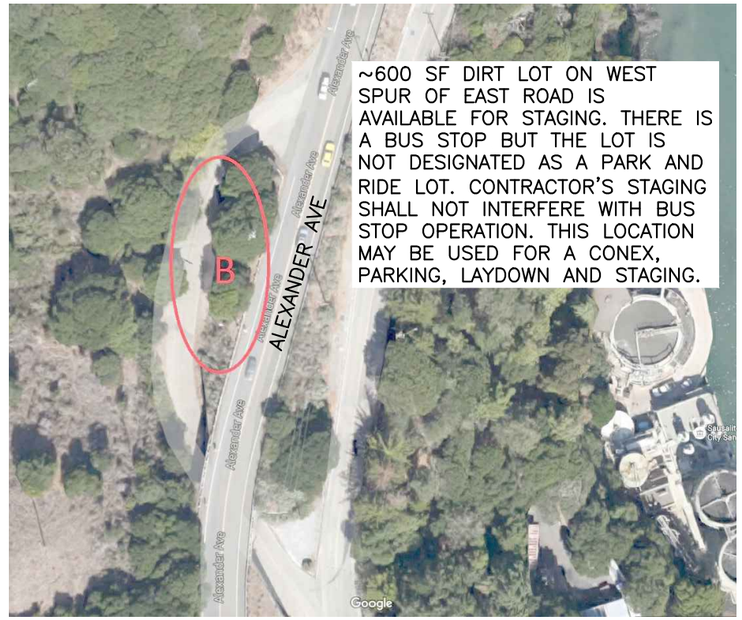

STAGING AREA B PLAN
NOT TO SCALE

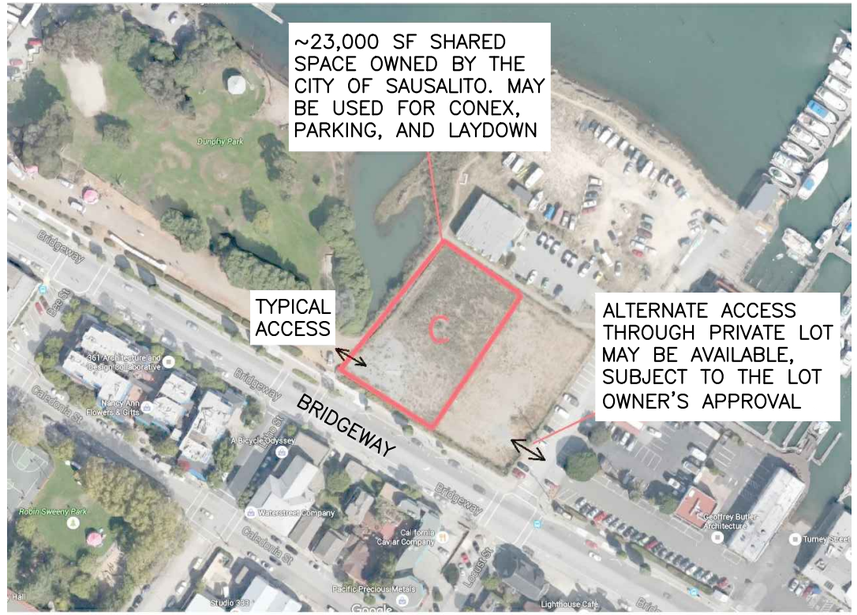

STAGING AREA C PLAN
NOT TO SCALE



STAGING AREA D PLAN
NOT TO SCALE

REGISTERED PROFESSIONAL ENGINEER — MARK W. TAKEMOTO — No. 64369 Exp. 06-30-17 CIVIL — STATE OF CALIFORNIA

0" 1" — VERIFY SCALES — BAR IS ONE INCH LONG ON FULL SIZE DRAWING. IF NOT ONE INCH LONG ON THIS DRAWING, ADJUST SCALES ACCORDINGLY

RMC water and environment

REV	DATE	BY	APVD	DESCRIPTION
1				
2				
3				
4				
5				

DESIGNED M. TAKEMOTO
DRAWN C. TO
CHECKED M. NAKAMOTO

SUBMITTED: MARK TAKEMOTO, RMC PROJECT ENGINEER CE-64369
APPROVED: STEVE CLARY, RMC ENGINEER CE-30318

SAUSALITO · MARIN CITY SANITARY DISTRICT

TREATMENT AND WET WEATHER FLOW UPGRADE

STAGING AREA LOCATIONS

DWG NO G-8
SHEET NO 9 OF 226
PROJ NO 055-006
DATE NOVEMBER 2016

FILENAME: 0055-006-G-8 11-11-16 11:08am CTo | XREFS: | X-SMCSD-TBLK | X-Topo Survey | X-Treatment Plant site plan | MTakemoto-PE-stamp |<<--

Last Saved By: SJung 10-12-16 03:16pm

DEMOLITION LEGEND

B-11	SOIL BORING
103	BENCHMARK/CONTROL POINT
PH10	POTHOLE
	RIGHT OF WAY LINE
105	CONTOUR LINE
	STREET LIGHT (SINGLE ARM)
	STREET LIGHT (DOUBLE ARM)
	STREET SIGN
+ 101.3	SPOT ELEVATION
	SLOPE DIRECTION
X X	FENCE
	FLOW LINE
	ABANDONED
XXXXXXXXXXXX	TO BE REMOVED
	DEMOLITION

GENERAL DEMOLITION NOTES:

1. REFERENCE DRAWINGS FOR STRUCTURES TO BE DEMOLISHED ARE INCLUDED AT THE END OF THE DRAWING SET.
2. DEMOLITION SHALL BE IN ACCORDANCE WITH SECTION 02050 RECONSTRUCTION AND SEQUENCING AND CONSTRAINTS IN SECTION 01010.
3. FOR PIPELINES TO BE CUT AND CAP, CONTRACTOR SHALL INSTALL THRUST RESTRAINT AS NECESSARY TO PREVENT CAP PIPELINES FROM DISCONNECTION AND LEAKAGE DURING OPERATION.
4. ALL MATERIALS/ITEMS IDENTIFIED "TO BE REMOVED" AND/OR "REMOVE" SHALL BE DISPOSED OF BY THE CONTRACTOR IN ACCORDANCE WITH THE CONTRACT DOCUMENTS.
5. TRENCHES FOR DEMOLITION SHALL BE BACKFILLED AND FINISHED IN ACCORDANCE SECTION 02200 EARTHWORK.
6. DEMOLITION SHALL BE IN ACCORDANCE WITH THE HAZARDOUS MATERIALS TESTING REPORT AND SECTION 02081 HAZARDOUS MATERIALS ABATEMENT
7. CONTRACTOR SHALL PROVIDE TEMPORARY BARRIERS AND/OR FALL PROTECTION AROUND FALL HAZARDS CREATED DURING AND AFTER DEMOLITION.

REGISTERED PROFESSIONAL ENGINEER — MARK W. TAKEMOTO — No. 64369 — Exp. 06-30-17 — CIVIL — STATE OF CALIFORNIA

0" 1" — VERIFY SCALES — BAR IS ONE INCH LONG ON FULL SIZE DRAWING. IF NOT ONE INCH LONG ON THIS DRAWING, ADJUST SCALES ACCORDINGLY

RMC water and environment

REV	DATE	BY	APVD	DESCRIPTION
1				
2				
3				
4				
5				

DESIGNED M. TAKEMOTO
DRAWN S. JUNG
CHECKED M. NAKAMOTO

SUBMITTED: MARK TAKEMOTO, RMC PROJECT ENGINEER CE-64369
APPROVED: STEVE CLARY, RMC ENGINEER CE-30318

SAUSALITO · MARIN CITY SANITARY DISTRICT

TREATMENT AND WET WEATHER FLOW UPGRADE

DEMOLITION LEGEND AND NOTES

DWG NO D-1
SHEET NO 10 OF 226
PROJ NO 055-006
DATE NOVEMBER 2016

FILENAME: 0055-006-D-1 11-11-16 11:08am CTo || XREFS: | X-SMCSD-TBLK | MTakemoto-PE-stamp |<<--

Last Saved By: SJung 10-12-16 03:22pm

SCALE: 1"=20'

0 20 40 60

SCALE IN FEET

SAN FRANCISCO BAY

NOTES:
1. LOCATION OF EXISTING UTILITIES SHOWN IS APPROXIMATE. NOT ALL UTILITIES MAY BE SHOWN. CONTRACTOR SHALL VERIFY UTILITY LOCATION AND SERVICE IN THE FIELD PRIOR TO DEMOLITION.
2. ALL UTILITIES AND STRUCTURES ON THE TREATMENT PLANT SIDE OF THE BOUNDARY OF DEMOLITION SHALL BE DEMOLISHED UNLESS NOTED OTHERWISE. CONTRACTOR SHALL NOTIFY THE CONSTRUCTION MANAGER IF UNKNOWN UTILITIES OR STRUCTURES ARE ENCOUNTERED. AT THE DISCRETION OF THE CONSTRUCTION MANAGER THESE UTILITIES OR STRUCTURES SHALL BE DEMOLISHED AT NO ADDITIONAL COST TO THE OWNER.
3. SEE SHEET E100-2 FOR ELECTRICAL, INSTRUMENTATION AND COMMUNICATION DEMOLITION REQUIREMENTS.
3. ALL WORK SHALL BE PERFORMED IN ACCORDANCE WITH SECTION 01040.

REMOVE TOP PORTION OF CONCRETE WALL. REMAINING PORTION OF THE WALL SHALL BE FLUSH WITH EXISTING GRADE. CONTRACTOR SHALL REPAIR THE EXPOSED TOP OF WALL SURFACE TO PROVIDE A CLEAN AND FINISHED APPEARANCE

CAUSEWAY HAS A FLOOR LOADING CAPACITY OF 250 LBS PER SQUARE FOOT

SEE C100-2 FOR BOUNDARY OF WALL REMOVAL

PROTECT MANHOLE IN PLACE

DEMOLISH CURB

DEMOLISH ODOR CONTROL DUCT AS REQUIRE FOR NEW DUCT INSTALLATION. SEE M100-4.

BOUNDARY OF ROAD DEMOLITION

SEE D-10

DEMOLISH CONCRETE PLATFORM AND ROAD

CAUTION! EXISTING UNDERGROUND 4" PG&E PRIMARY DUCT 3'± COVER, NO ENCASEMENT (HIGH VOLTAGE)

REMOVE TREES - SEE L10-1 FOR TREE REMOVAL PLAN

DEMOLISH

DEMOLISH

BOUNDARY OF DEMOLITION/ EXCAVATION

(2) 2" 1W

HEAVY VEGETATION THROUGHOUT HILLSIDE

CAUTION! EXISTING UNDERGROUND 12KV POWER LINE

28" INF SEWER

TELEPHONE LINE

PREVIOUSLY ABANDONED 4" DIGESTED SLUDGE, 4" RW, AND 2-1/2" RW. DEMOLISH AS REQUIRED FOR SOIL NAIL WALL CONSTRUCTION.

ABANDON 8" SS SEE D-3

REMOVE FFR MEDIA SEE D300-2

DEMOLISH EFFLUENT SCREEN SEE D400-1

REMOVE FILTER FEED PUMPS SEE D400-1

DEMOLISH SAND FILTERS SEE D400-1

FOR ENLARGED AREA SEE DWG D-3

REMOVE PAVING AND HILLSIDE CUT SEE DWG C100-3

REMOVE TREES AS NEEDED - SEE L1.1 FOR TREE PRESERVATION PLAN

REMOVE TREES AS NEEDED - SEE L1.1 FOR TREE PRESERVATION PLAN

PLANT ACCESS ROAD

EAST ROAD

FORT BAKER ROAD

ALEXANDER AVENUE

PLAN
1" = 20'

REGISTERED PROFESSIONAL ENGINEER
MARK W. TAKEMOTO
No. 64369
Exp. 06-30-17
CIVIL
STATE OF CALIFORNIA

0" 1"
VERIFY SCALES
BAR IS ONE INCH LONG ON FULL SIZE DRAWING. IF NOT ONE INCH LONG ON THIS DRAWING, ADJUST SCALES ACCORDINGLY

RMC water and environment

REV	DATE	BY	APVD	DESCRIPTION
1				
2				
3				
4				
5				

DESIGNED M. TAKEMOTO
DRAWN C. TO
CHECKED M. NAKAMOTO

SUBMITTED: MARK TAKEMOTO
RMC PROJECT ENGINEER CE-64369

APPROVED: STEVE CLARY
RMC ENGINEER CE-30318

SAUSALITO · MARIN CITY SANITARY DISTRICT

TREATMENT AND WET WEATHER FLOW UPGRADE

OVERALL SITE DEMOLITION PLAN

DWG NO D-2
SHEET NO 11 OF 226
PROJ NO 055-006
DATE NOVEMBER 2016

FILENAME: 0055-006-D-2 11-11-16 11:09am CTo | XREFS: | X-SMCSD-TBLK | X-2012_topo_survey | X-Treatment Plant site plan | X-Site | M:\takemoto-PE-stamp |<<--

Last Saved By: SJung 10-12-16 03:25pm

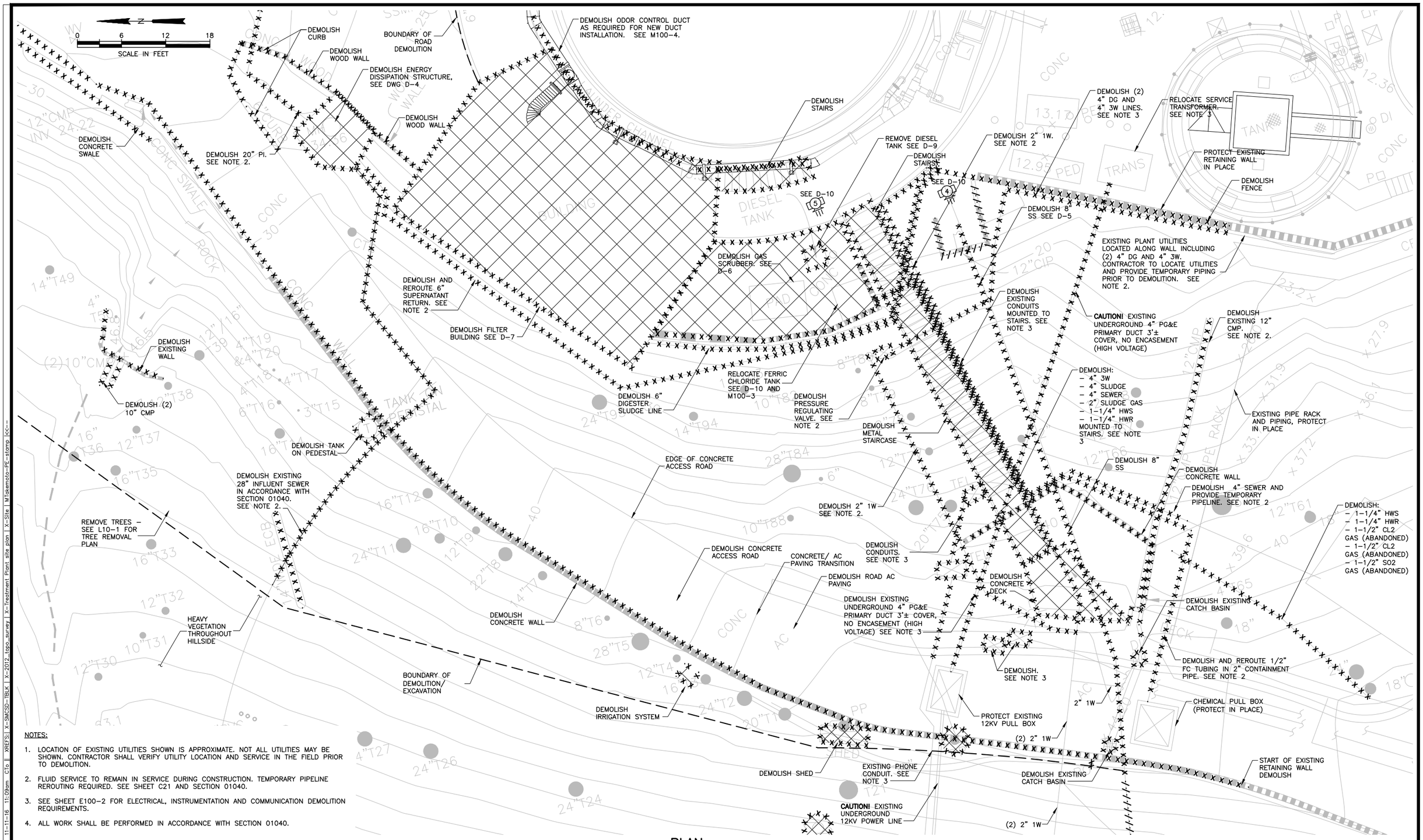

NOTES:

1. LOCATION OF EXISTING UTILITIES SHOWN IS APPROXIMATE. NOT ALL UTILITIES MAY BE SHOWN. CONTRACTOR SHALL VERIFY UTILITY LOCATION AND SERVICE IN THE FIELD PRIOR TO DEMOLITION.
2. FLUID SERVICE TO REMAIN IN SERVICE DURING CONSTRUCTION. TEMPORARY PIPELINE REROUTING REQUIRED. SEE SHEET C21 AND SECTION 01040.
3. SEE SHEET E100-2 FOR ELECTRICAL, INSTRUMENTATION AND COMMUNICATION DEMOLITION REQUIREMENTS.
4. ALL WORK SHALL BE PERFORMED IN ACCORDANCE WITH SECTION 01040.

PLAN
1" = 6'

REGISTERED PROFESSIONAL ENGINEER MARK W. TAKEMOTO No. 64369 Exp. 06-30-17 CIVIL STATE OF CALIFORNIA

0" 1" — VERIFY SCALES — BAR IS ONE INCH LONG ON FULL SIZE DRAWING. IF NOT ONE INCH LONG ON THIS DRAWING, ADJUST SCALES ACCORDINGLY

RMC water and environment

REV	DATE	BY	APVD	DESCRIPTION

DESIGNED M. TAKEMOTO
DRAWN C. TO
CHECKED M. NAKAMOTO

SUBMITTED: MARK TAKEMOTO, RMC PROJECT ENGINEER CE-64369
APPROVED: STEVE CLARY, RMC ENGINEER CE-30318

SAUSALITO · MARIN CITY SANITARY DISTRICT

TREATMENT AND WET WEATHER FLOW UPGRADE

DEMOLITION ENLARGED PLAN

DWG NO D-3
SHEET NO 12 OF 226
PROJ NO 055-006
DATE NOVEMBER 2016

FILENAME: 0055-006-D-2 11-11-16 11:09am CTo || XREFS: | X-SMCSD-TBLK | X-2012 topo survey | X-Treatment Plant site plan | X-Site | MTakemoto-PE-stamp |<<--

Last Saved By: SJung 10-12-16 03:25pm

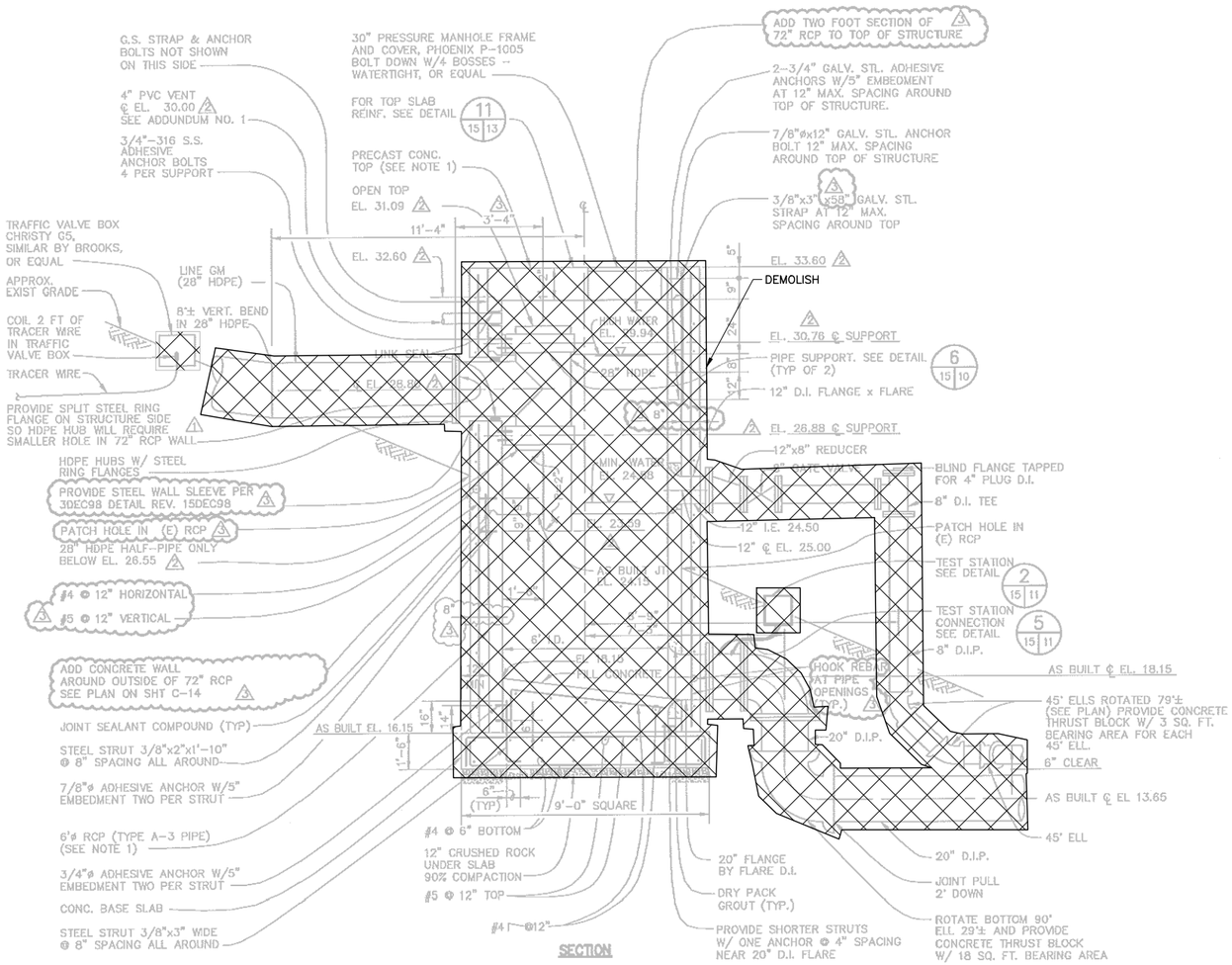

SECTION

NOTES:

1. PROVIDE FACTORY APPLIED PVC LINER INSIDE RCP, UNDERSIDE OF TOP AND INSIDE HATCH OPENING, AMERON T–LOCK OR EQUAL. SEAL JOINTS IN FIELD.
2. CORE DRILL PIPE HOLES THROUGH PVC LINER IN FIELD.
3. PIPES ARE SHOWN ROTATED INTO SECTION VIEW FOR CLARITY. SEE PLAN VIEW DETAIL 10 / 15 | 10 FOR PROPER ORIENTATION.
4. MINIMUM WATER ELEVATION SHALL BE THE BOTTOM ELEVATION OF THE V–NOTCH WEIR IN THE PRIMARY CLARIFIER. V–NOTCH FIELD MEASURED AT EL. 24.58 ON 2 OCT 98.

ENERGY DISSIPATOR/VENT STRUCTURE DETAIL 5 / 13 | 15
N.T.S.

NOTES:

1. THE EXISTING ENERGY DISSIPATION STRUCTURE SHALL BE USED AS PART OF THE TEMPORARY INFLUENT SEWER CONNECTIONS. SEE DRAWING C20.
2. DEMOLITION OF THE ENERGY DISSIPATION STRUCTURE SHALL BE SEQUENCED IN ACCORDANCE WITH SECTION 01040.

RECORD PROFESSIONAL ENGINEER MARK W. TAKEMOTO No. 64369 Exp. 06–30–17 CIVIL STATE OF CALIFORNIA

0" 1" — VERIFY SCALES — BAR IS ONE INCH LONG ON FULL SIZE DRAWING. IF NOT ONE INCH LONG ON THIS DRAWING, ADJUST SCALES ACCORDINGLY

RMC water and environment

REV	DATE	BY	APVD	DESCRIPTION
△1				
△2				
△3				
△4				
△5				

DESIGNED M. TAKEMOTO
DRAWN C. TO
CHECKED M. NAKAMOTO

SUBMITTED: MARK TAKEMOTO, RMC PROJECT ENGINEER CE-64369
APPROVED: STEVE CLARY, RMC ENGINEER CE-30318

SAUSALITO · MARIN CITY SANITARY DISTRICT

TREATMENT AND WET WEATHER FLOW UPGRADE

ENERGY DISSIPATION STRUCTURE DEMOLITION DETAILS

DWG NO D-4
SHEET NO 13 OF 226
PROJ NO 055-006
DATE NOVEMBER 2016

FILENAME: 0055-006-D-2 11-11-16 11:09am CTo || XREFS: | X-SMCSD-TBLK | X-2012_topo_survey | X-Treatment Plant site plan | X-Site | MTakemoto-PE-stamp |<<--

Last Saved By: SJung 10-12-16 03:25pm

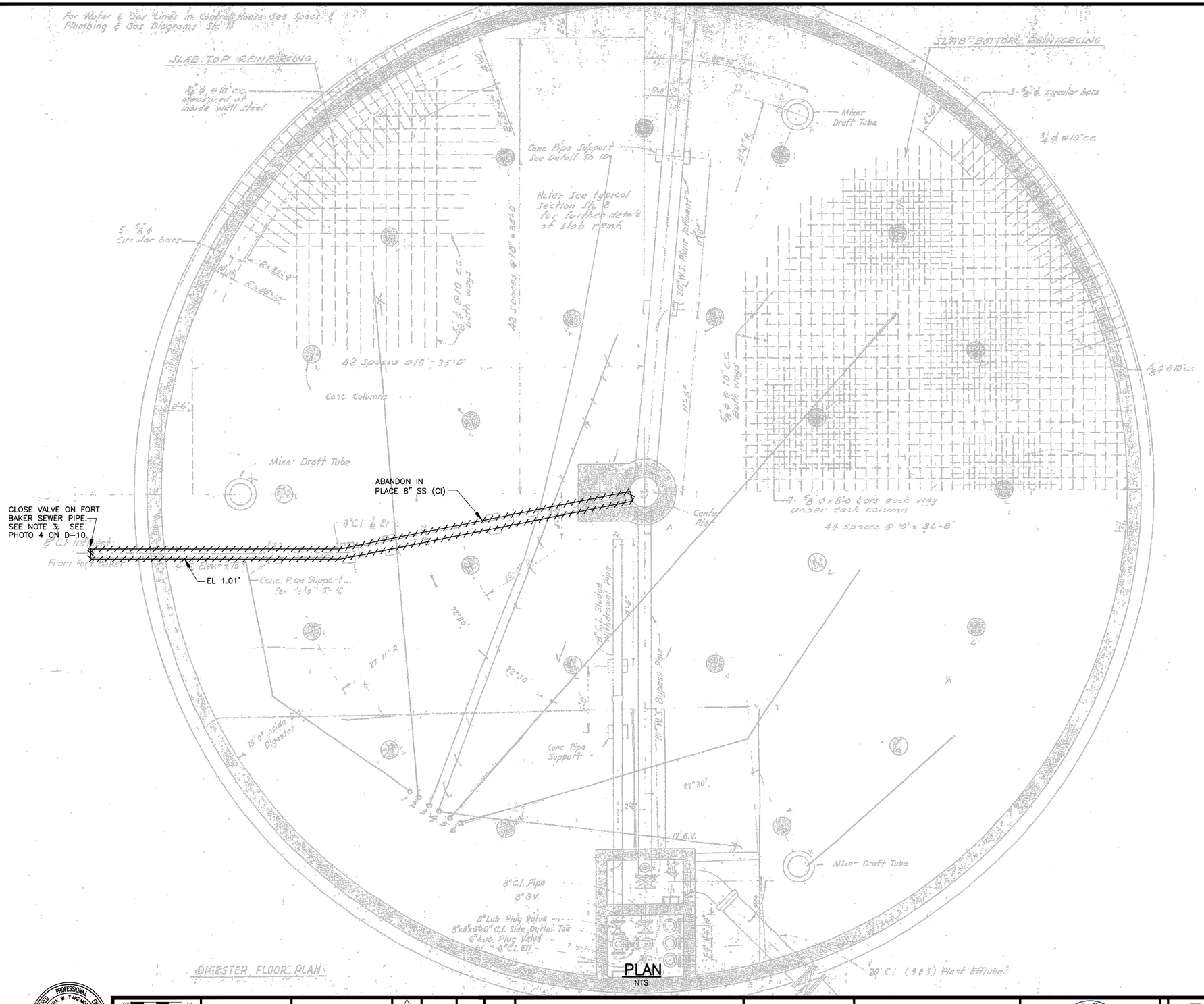

NOTES:

1. DRAWING NOT TO SCALE.
2. DEMOLITION REFERENCE FROM 1952 DRAWING (6 OF 20) SET (SEE REFERENCE DRAWINGS).
3. DEMOLITION OF THE FORT BAKER SEWER SHALL BE PERFORMED IN ACCORDANCE WITH SECTION 01040.

REGISTERED PROFESSIONAL ENGINEER MARK W. TAKEMOTO No. 64369 Exp. 06-30-17 CIVIL STATE OF CALIFORNIA

0" 1" — VERIFY SCALES — BAR IS ONE INCH LONG ON FULL SIZE DRAWING. IF NOT ONE INCH LONG ON THIS DRAWING, ADJUST SCALES ACCORDINGLY

RMC water and environment

REV	DATE	BY	APVD	DESCRIPTION

DESIGNED M. TAKEMOTO
DRAWN S. JUNG
CHECKED M. NAKAMOTO

SUBMITTED: MARK TAKEMOTO, RMC PROJECT ENGINEER CE-64369
APPROVED: STEVE CLARY, RMC ENGINEER CE-30318

SAUSALITO · MARIN CITY SANITARY DISTRICT

TREATMENT AND WET WEATHER FLOW UPGRADE

EXISTING PRIMARY CLARIFIER DEMOLITION PLAN - 1

DWG NO D-5
SHEET NO 14 OF 226
PROJ NO 055-006
DATE NOVEMBER 2016

FILENAME: 0055-006-D-5 11-11-16 11:10am CTo || XREFS:| X-SMCSD-TBLK | MTakemoto-PE-stamp |<<--

Last Saved By: SJung 10-12-16 03:25pm

NOTES:

1. DRAWING NOT TO SCALE.
2. LOCATION OF EXISTING UTILITIES SHOWN IS APPROXIMATE. NOT ALL UTILITIES MAY BE SHOWN. CONTRACTOR SHALL VERIFY UTILITY LOCATION AND SERVICE IN THE FIELD PRIOR TO DEMOLITION.
3. DEMOLITION REFERENCE FROM 1988 DRAWING (M-23) SET (SEE REFERENCE DRAWINGS). CONTRACTOR SHALL REMOVE STRUCTURE, MECHANICAL EQUIPMENT, AND UTILITIES.
4. UNLESS OTHERWISE NOTED, PIPING WITHIN 10 FEET OF THE STRUCTURE THAT IS TO BE TAKEN OUT OF SERVICE SHALL BE CUT AND REMOVED. REMAINING ABANDONED PIPELINES SHALL BE CAPPED UNLESS OTHERWISE NOTED.
5. FLUID SERVICE TO REMAIN IN SERVICE DURING CONSTRUCTION. TEMPORARY REROUTING REQUIRED. SEE SHEET C21 AND SECTION 01040.

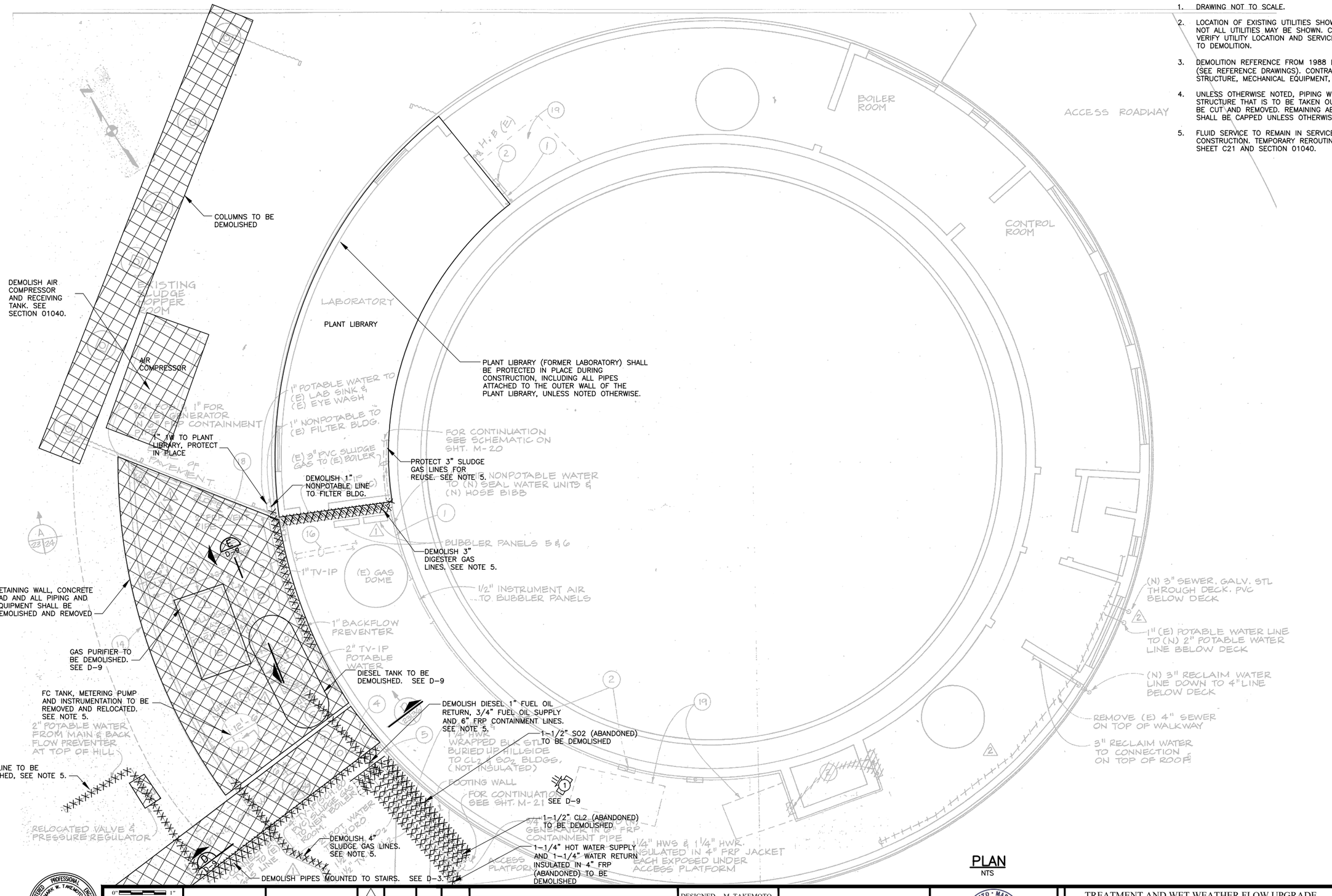

PLAN
NTS

REGISTERED PROFESSIONAL ENGINEER MARK W. TAKEMOTO No. 64369 Exp. 06-30-17 CIVIL STATE OF CALIFORNIA

0" 1" VERIFY SCALES BAR IS ONE INCH LONG ON FULL SIZE DRAWING. IF NOT ONE INCH LONG ON THIS DRAWING, ADJUST SCALES ACCORDINGLY

RMC water and environment

REV	DATE	BY	APVD	DESCRIPTION

DESIGNED M. TAKEMOTO
DRAWN S. NGUYEN
CHECKED M. NAKAMOTO

SUBMITTED: MARK TAKEMOTO, RMC PROJECT ENGINEER CE-64369
APPROVED: STEVE CLARY, RMC ENGINEER CE-30318

SAUSALITO · MARIN CITY SANITARY DISTRICT

TREATMENT AND WET WEATHER FLOW UPGRADE

EXISTING PRIMARY CLARIFIER DEMOLITION PLAN - 2

DWG NO D-6
SHEET NO 15 OF 226
PROJ NO 055-006
DATE NOVEMBER 2016

FILENAME: 0055-006-D-6 11-11-16 11:10am CTo || XREFS:| X-SMCSD-TBLK | MTakemoto-PE-stamp |<<--

Last Saved By: SJung 10-12-16 03:25pm

pulleys, gears & other moving parts as req'd. by the General Industrial Safety Orders, issued by the Calif. Div. of Industrial Safety.
See Equipment Floor Slab Loading Requirements on Floor Plan Note 3 Sh. 6.

Treadle Operated Valve, or equal "Speakman Co. Assembly, or approved equal. All Assembly Piping & Fittings To be Galv.

DRAIN SYSTEM (See Sh. 2)

PROTECT 4" SUMP DISCHARGE IN PLACE FOR REUSE. SEE M100-2.

Columns Below See Sh. 6

12'-9"

Vacuum Filter

7'-3"

Exist. Wall Intersect Below, See Sh. 6

6" P.V.C. Drain Line from C.B.

Exist. Gate

4" P.V.C. Sump Pump Discharge Line

DEMOLISH 4" SUMP PUMP DISCHARGE. SEE NOTE 6.

DEWATERING BUILDING STRUCTURE AND ALL EQUIPMENT AND PIPING IN THE STRUCTURE SHALL BE DEMOLISHED

B D-8

D

14 WF 30 Beam, Below, See Sh. 6

Handrail, Typ. See Sect. D-D, Sheet 4

1" H.B. Fr. Water

12" ϕ Duct See Note Sh. 7

STEEL STAIR No. 1 (See Details Sh. 5)

1:12

Exist. Clarifier Influent Line

Exist. 4" W.S. Sludge Line, Install Offset in Vert. Portion As Req'd. to Provide Clearance for Steel Stair Installation.

STAIRS TO BE DEMOLISHED

Exist. 4" W.S. Sludge Line

Connect New 4" W.S. Sludge Line to Exist. 4" W.S. Sludge Line Utilizing A Welded Conn. Install 4" P.V. as shown & Provide Vert. Bend as Req'd.

Install 4'-0" Wide x 2'-0" High Louver Under this Window, See Louver Note this Sheet & Northeast Elev. Sh. 7

Chemical Storage Area, See Floor Plan Sh. 6

18'-10½"±

Vacuum Filter, Exist. Clarifier & Exist. Control Room & Lab, See Sheet 6

37'-9"±

LIME SLURRY SUPPLY TANK & MIXER (See Specs.)

FERRIC CHLORIDE SUPPLY TANK & MIXER (See Specs.)

6" P.V.C. Drain Line

FERRIC CHLORIDE FEEDER (See Specs.)

DEMOLISH 6" DRAIN LINE

6" W.S. Drain Line

Pipe Support Bracket See Det. Sh. 9

Slope 2"

4" W.S.

7'-6"

6" P.V.C. to W.S. Transition, Grooved Collar Pipe Ends w/ Vict. Coup., Typ.

LIME FEEDER (See Specs.)

C

6" P.V.C. Drain Line

DRY CHEMICAL FEED SYSTEM (See Specs.)

A D-8

PLANT LIBRARY (BELOW) SHALL BE PROTECTED IN PLACE

Mixing Tank

Roof Drain Leader, Typ.

Chem. Transfer Pump

14 WF Beam Below, See Sh. 6

Install 4" W.S. Sludge Line at a ℄ Rad. of 27'-0" on approved pipe supports (7'-0" Max. Spacing). The pipe shall have Victaulic type connections & fittings and/or Unions as Req'd.

STAIRS TO BE DEMOLISHED

Pipe Supports, Typical

Chemical Feed Pump

INSTALL POWER WALL EXHAUSTER No. 2 (See Note Below)

3" DIGESTER GAS LINES. SEE NOTE 6.

Install 1" G.V.

DEMOLISH 2" 1W. CAP AT TEE. SEE NOTE 6.

Exist. Fr. Water Line

STAIRS TO BE DEMOLISHED

STEEL STAIR No. 2 (See Details Sh. 5)

Remove Exist. & Install New 1" Sch. 80 B.I. Pipe From this Jt. to the Exist. Valve at the Exist. Chlorinator in the Chlor. Rm. (See Diagram Sh. 5) Coat New Pipe with "Protecto-Wrap" 200-A Tape, or "Polyken" No. 930 Tape, or Approved Equal. Secure Pipe to Wall, See Note Sh. 4

Exist. Stairs

Exist. 1" Chlorine Gas Line

DEMOLISH 1" CL GAS LINE (ABANDONED) AS NECESSARY

Exist. Fence

Exchanger Rm. Eq., Dry Pack in Place

Install 4" P.V.C. Drain thru wall from Pump Pit Below, Drypack in Place.

SECTION W-W

6" W.S. Drain Line

Approved Pipe Support Bracket w/ Appurtenances, Securely Fasten to Exist. Clarifier Platform in an approved manner

Exist. Clarifier Center Platform

Exist. Clarifier Walkway

SAMPLE PUMP SYSTEM (See Det. Sh. 4 & Specs.)

Strainers Disch. Piping Discharge Point

RECLAIMED WATER PUMP SYSTEM (See Det. Sh. 4 & Specs.)

1½" P.V.C. Sample Pump Suction Line, Secure to Exist. Clarifier Walkway

Install Sample Pump Suction Basket, See Detail Sh. 4

Exist. 12" C.I. Bypass Line

¼" Plastic Tube in a ¾" P.V.C. Conduit (Signal Air)

¾" P.V.C. (Power Air)

1½" P.V.C. (Recl. Water)

Exist. Clarifier Wall

NOTE See Pipe Supp. Note Sh. 4

SECTION X-X No Scale

Install 1½" P.V.C. Recl. Water Line

Install 4" W.S. Sludge Line

Exist. 4" W.S. Sludge Line

DIGESTED SLUDGE FEED PUMP (See Specs.)

Exist. Sludge Feed Pump

Ex. Fr. Water H.B.

Conn. to Ex. Fr. Water w/ 1" P.V.C. For Strainer Wash Water

1½" P.V.C. Sample Line to Residual Cont.

INSTALL RESIDUAL CONTROLLER IN ROOM BELOW (See Diagram Sh. 5 & Specs.)

Install 4" P.V.C. Drain Line

Exist. Shower In Room Below

CUT OPNG. IN REINF. CONC. WALL & INSTALL POWER WALL EXHAUSTER No. 1, @ 1'-0" ABOVE CHLOR. RM. FLOOR (See Note At Left)

INSTALL CHLORINATOR ADJACENT TO EXISTING CHLORINATOR IN CHLORINATOR ROOM BELOW (See Diagram Sh. 5 & Specs.)

Exist. Chlorinator

Exist. Air Compressor (In Chlor. Rm.)

Exist. Flow Signal Converter (In Chlor. Rm.)

Cut 1'-0" Square Opening in reinf. conc. wall, (Bottom of Opening 3" above floor.) Install Louver. See Note below.

Install Signal & Power Air Lines From Equip. in Chlor. Room to Chem. Feed Pump. See Diagram Sh. 5

Close Valves & Remove Operators & Shafts. Finish Flush w/ Conc. & patch as required

Install 1" Sch. 80 B.I. Pipe Chlorine Gas Line. See Note at Left.

1" CHLORINE GAS LINE (ABANDONED)

PLAN
NTS

NOTES:

1. DRAWING NOT TO SCALE.
2. LOCATION OF EXISTING UTILITIES SHOWN IS APPROXIMATE. NOT ALL UTILITIES MAY BE SHOWN. CONTRACTOR SHALL VERIFY UTILITY LOCATION AND SERVICE IN THE FIELD PRIOR TO DEMOLITION.
3. DEMOLITION REFERENCE FROM 1972 DRAWING (3 OF 13) SET (SEE REFERENCE DRAWINGS). CONTRACTOR SHALL REMOVE STRUCTURE, MECHANICAL EQUIPMENT, AND UTILITIES.
4. UNLESS OTHERWISE NOTED, PIPING WITHIN 10 FEET OF THE STRUCTURE THAT IS TO BE TAKEN OUT OF SERVICE SHALL BE CUT AND REMOVED. REMAINING ABANDONED PIPELINES SHALL BE CAPPED UNLESS OTHERWISE NOTED.
5. THE VACUUM FILTER WAS PREVIOUSLY REPLACED WITH A BELT FILTER PRESS. CONTRACTOR SHALL DEMOLISH ALL EQUIPMENT LOCATED WITHIN THE DEWATERING BUILDING INCLUDING THE BELT PRESS.
6. FLUID SERVICE TO REMAIN IN SERVICE DURING CONSTRUCTION. TEMPORARY REROUTING REQUIRED. SEE SHEET C21 AND SECTION 01040.
7. ASBESTOS AND OTHER HAZARDOUS MATERIALS HAVE BEEN IDENTIFIED IN THE DEWATERING BUILDING. DEMOLITION SHALL BE IN ACCORDANCE WITH SECTION 02081.

REGISTERED PROFESSIONAL ENGINEER MARK W. TAKEMOTO No. 64369 Exp. 06-30-17 CIVIL STATE OF CALIFORNIA

0" 1" VERIFY SCALES BAR IS ONE INCH LONG ON FULL SIZE DRAWING. IF NOT ONE INCH LONG ON THIS DRAWING, ADJUST SCALES ACCORDINGLY

RMC water and environment

REV	DATE	BY	APVD	DESCRIPTION

DESIGNED M. TAKEMOTO
DRAWN S. JUNG
CHECKED M. NAKAMOTO

SUBMITTED: MARK TAKEMOTO, RMC PROJECT ENGINEER CE-64369
APPROVED: STEVE CLARY, RMC ENGINEER CE-30318

SAUSALITO · MARIN CITY SANITARY DISTRICT

TREATMENT AND WET WEATHER FLOW UPGRADE

DEWATERING BUILDING DEMOLITION PLAN - 1

DWG NO D-7
SHEET NO 16 OF 226
PROJ NO 055-006
DATE NOVEMBER 2016

FILENAME: 0055-006-D-7 11-11-16 11:10am CTo || XREFS: | X-SMCSD-TBLK | MTakemoto-PE-stamp |<--

Last Saved By: SJung 10-12-16 03:29pm

NOTES:

1. DRAWING NOT TO SCALE.
2. DEMOLITION REFERENCE FROM 1972 DRAWING (4 OF 13) SET (SEE REFERENCE DRAWINGS). CONTRACTOR SHALL REMOVE STRUCTURE, MECHANICAL EQUIPMENT, AND UTILITIES.
3. UNLESS OTHERWISE NOTED, PIPING WITHIN 10 FEET OF THE STRUCTURE THAT IS TO BE TAKEN OUT OF SERVICE SHALL BE CUT AND REMOVED. REMAINING ABANDONED PIPELINES SHALL BE CAPPED UNLESS OTHERWISE NOTED.
4. THE VACUUM FILTER WAS PREVIOUSLY REPLACED WITH A BELT FILTER PRESS. CONTRACTOR SHALL DEMOLISH ALL EQUIPMENT LOCATED WITHIN THE DEWATERING BUILDING INCLUDING THE BELT PRESS.
5. FLUID SERVICE TO REMAIN IN SERVICE DURING CONSTRUCTION. TEMPORARY REROUTING REQUIRED. SEE SHEET C21 AND SECTION 01040.
6. ASBESTOS AND OTHER HAZARDOUS MATERIALS HAVE BEEN IDENTIFIED IN THE DEWATERING BUILDING. DEMOLITION SHALL BE IN ACCORDANCE WITH SECTION 02081.

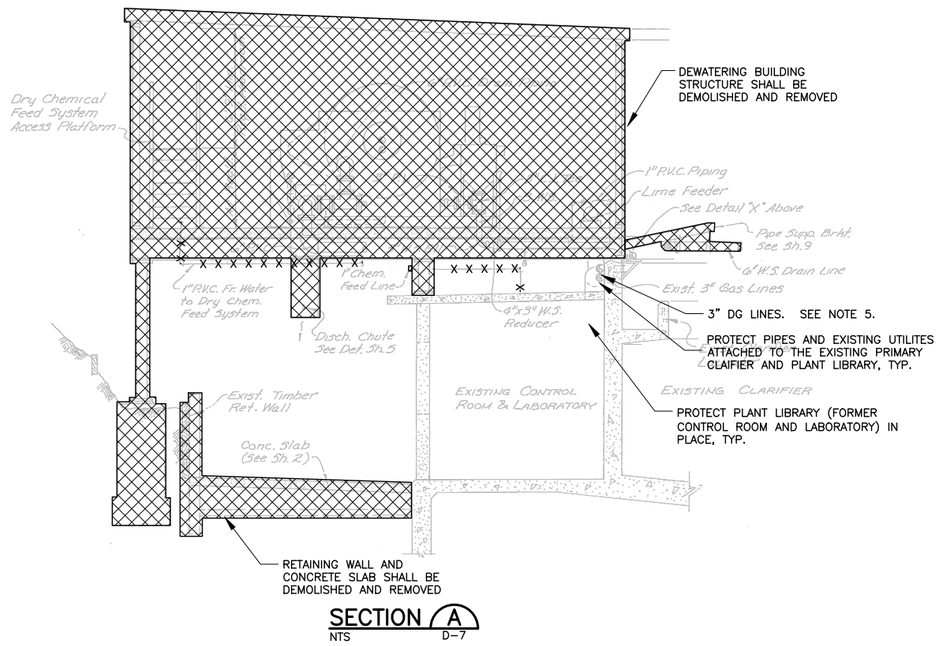

SECTION A
NTS D-7

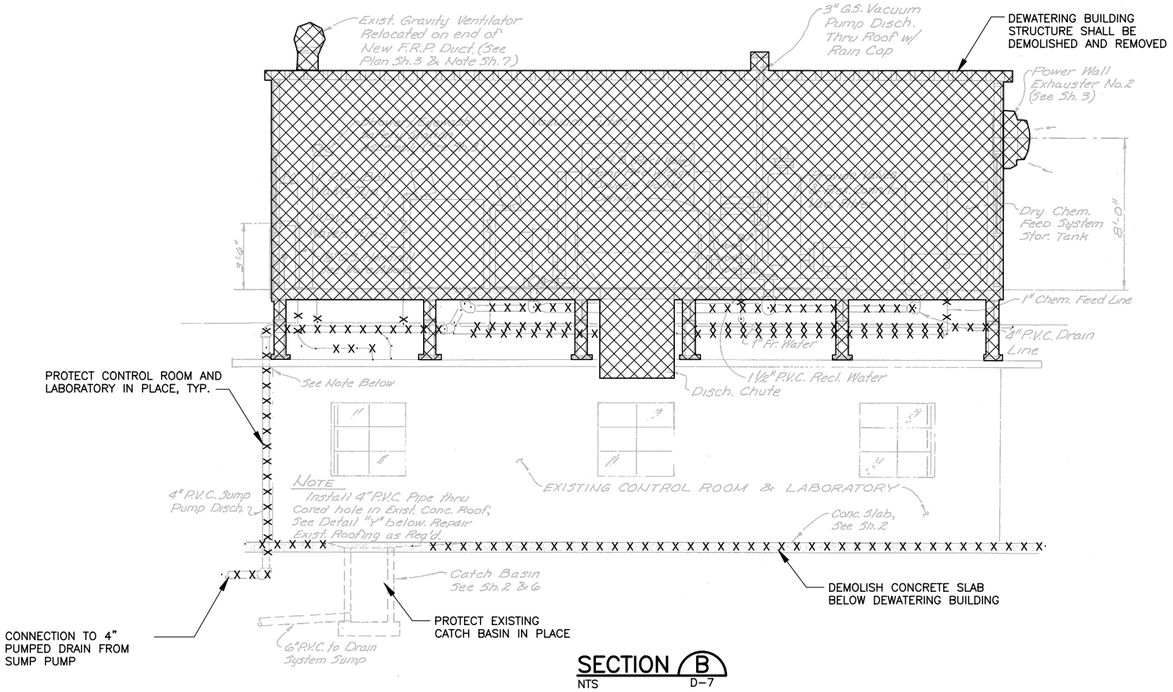

SECTION B
NTS D-7

REGISTERED PROFESSIONAL ENGINEER — MARK W. TAKEMOTO — No. 64369 — Exp. 06-30-17 — CIVIL — STATE OF CALIFORNIA

0" 1" — VERIFY SCALES — BAR IS ONE INCH LONG ON FULL SIZE DRAWING. IF NOT ONE INCH LONG ON THIS DRAWING, ADJUST SCALES ACCORDINGLY

RMC water and environment

REV	DATE	BY	APVD	DESCRIPTION

DESIGNED M. TAKEMOTO
DRAWN S. JUNG
CHECKED M. NAKAMOTO

SUBMITTED: MARK TAKEMOTO, RMC PROJECT ENGINEER CE-64369
APPROVED: STEVE CLARY, RMC ENGINEER CE-30318

SAUSALITO · MARIN CITY SANITARY DISTRICT

TREATMENT AND WET WEATHER FLOW UPGRADE

DEWATERING BUILDING DEMOLITION SECTIONS

DWG NO D-8
SHEET NO 17 OF 226
PROJ NO 055-006
DATE NOVEMBER 2016

FILENAME: 0055-006-D-8 11-11-16 11:11am CTo || XREFS: X-SMCSD-TBLK | MTakemoto-PE-stamp |<<--

Last Saved By: SJung 10-12-16 03:29pm

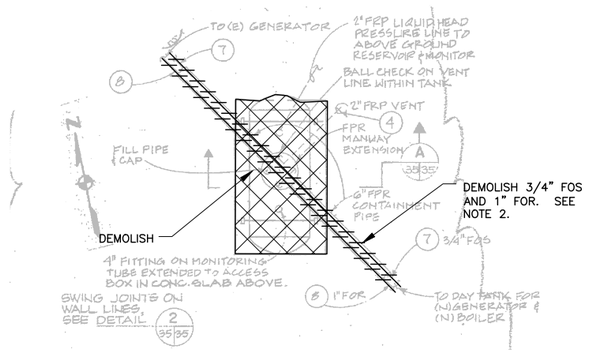

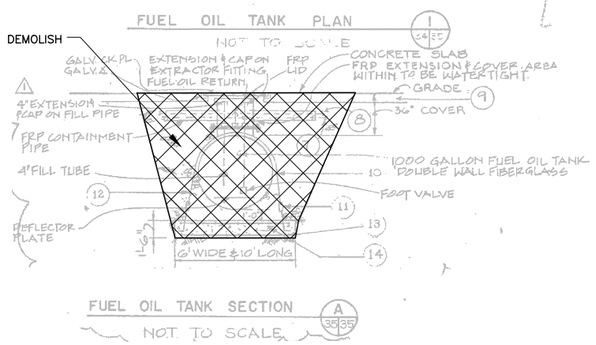

EXISTING DIESEL TANK

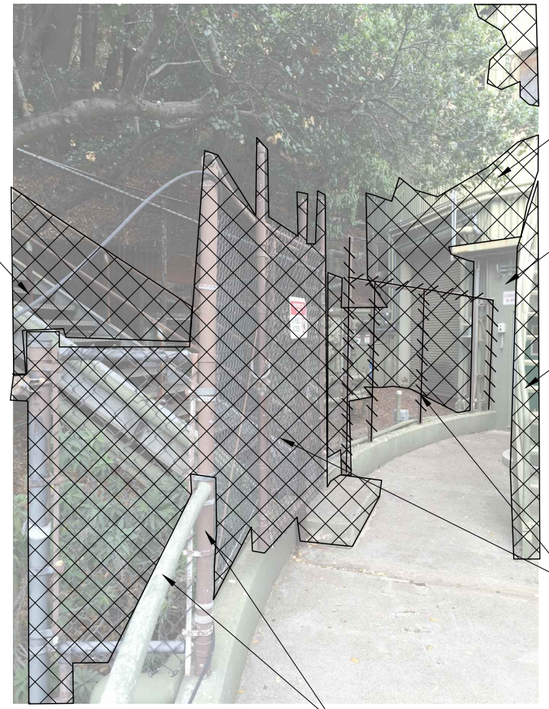

PHOTO 1 D-6

NOTES:

1. LOCATION OF EXISTING UTILITIES SHOWN IS APPROXIMATE. NOT ALL UTILITIES MAY BE SHOWN. CONTRACTOR SHALL VERIFY UTILITY LOCATION AND SERVICE IN THE FIELD PRIOR TO DEMOLITION.
2. FLUID SERVICE TO REMAIN IN SERVICE DURING CONSTRUCTION. TEMPORARY REROUTING REQUIRED. SEE SHEET C21 AND SECTION 01040.
3. ALL WORK SHALL BE PERFORMED IN ACCORDANCE WITH SECTION 01040.
4. GAS SCRUBBER/PURIFIER MEDIA IS A POTENTIAL FIRE HAZARD AND SHALL BE DEMOLISHED IN ACCORDANCE WITH SECTION 02050.

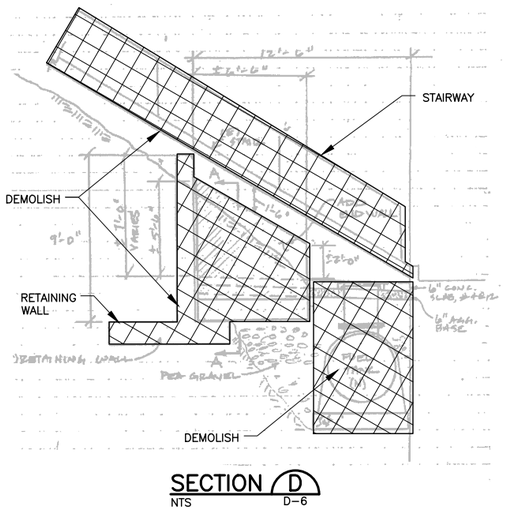

SECTION D D-6
NTS

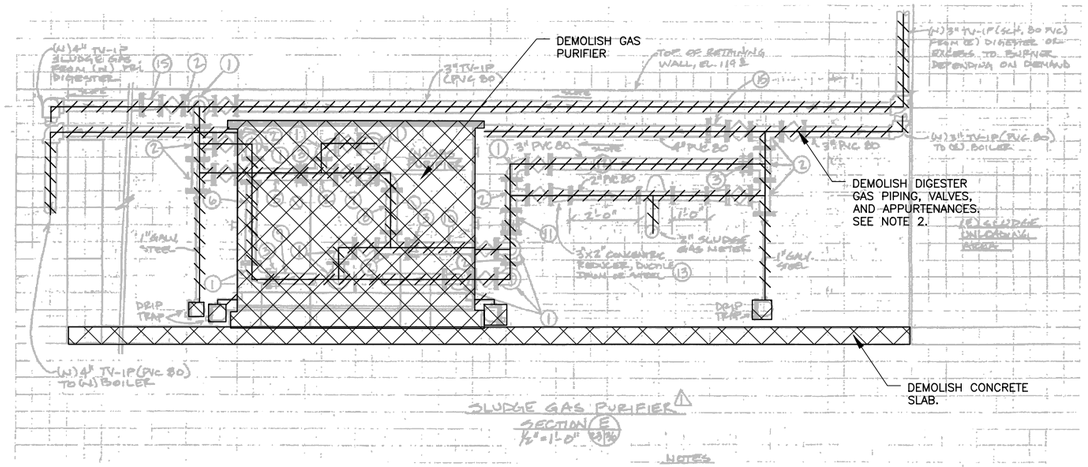

SECTION E D-6
NTS

RFQ #22-WATERWORKS TAKE-OFF FOR SLUDGE GAS SYSTEM MODIFICATIONS

ITEM	QUAN	SIZE	DESCRIPTION	MATERIAL
1	16	3"	90 DEGREE ELBOW-FL X FL	CAST IRON
2	10	3"	TEE-FL X FL X FL	CAST IRON
3	5	3"	FCA-SUIT D.I.PIPE O.D.	MANF STND COATING
4	2	3"	FCA-SUIT STEEL PIPE O.D.	MANF STND COATING
5	1	3"	1'-11" FL X PE SPOOL	DUCTILE IRON
6	1	3"	2'-4 5/8" FL X FL SPOOL	DUCTILE IRON
7	1	3"	0'-5 7/8" FL X FL SPOOL	DUCTILE IRON
8	1	3"	1'-2 1/2" FL X FL SPOOL	DUCTILE IRON
9	1	3"	5'-2 1/4" FL X PE SPOOL	DUCTILE IRON
10	1	3"	1'-11" FL X PE SPOOL	DUCTILE IRON
11	1	3"	0'-5" FL X PE SPOOL	DUCTILE IRON
12	1	3"	5'-7 5/8" FL X PE SPOOL	DUCTILE IRON
13	2		3" X 2" FL X FL CONC RED	CAST IRON
14	4	2"	COMPANION FLANGE	CAST IRON
15	2		4" X 3" FL X FL CONC RED	CAST IRON
16	57	3"	1/8" FULL FACED GASKETS	BLACK NEOPRENE
17	244		5/8" X 2 1/2" BOLTS	ELECTROPLATED
18	244		5/8" NUTS	ELECTROPLATED
19	2	4"	1/8" FULL FACED GASKETS	BLACK NEOPRENE
20	6	3"	COMPANION FLANGE	CAST IRON
21	6	3"	1/8" FULL FACED GASKETS	BLACK NEOPRENE
22	1	6"	FL X FL STEEL PIPE SPOOL	F.E.C.&L.
23	1	6"	FL X FL STEEL PIPE SPOOL	F.E.C.&L.
24	1	6"	FL X FL STEEL PIPE SPOOL	F.E.C.&L.
25	1	6"	FL X PE STEEL PIPE SPOOL	F.E.C.&L.
26	1	6"	FCA TO SUIT STEEL PIPE O.D.	MANF STND COATING
27	1	6"	FL X FL STEEL 90 DEGREE ELBOW	F.E.C.&L.
28	1		6" X 6" X 4" FL X FL TEE	F.E.C.&L.
29	11	6"	1/8" FULL FACED GASKETS	BLACK NEOPRENE
30	88		3/4" X 3 1/4" BOLTS	ELECTROPLATED
31	88		3/4" NUTS	ELECTROPLATED
32	1	2"	FL X FL STEEL PIPE SPOOL	F.E.C.& L
33	1	2"	FL X FL STEEL PIPE SPOOL	F.E.C.& L.
34	1	2"	FL X FL STEEL PIPE SPOOL	F.E.C.& L.
35	1	2"	FL X FL STEEL PIPE SPOOL	F.E.C.& L.
36	2	2"	COMPANION FLANGE	CAST IRON
37	5	2"	1/8" FULL FACED BASKET	BLACK NEOPRENE
38	20		5/8" X 2 1/4" BOLTS	ELECTROPLATED
39	20		5/8" NUTS	ELECTROPLATED

REGISTERED PROFESSIONAL ENGINEER — MARK W. TAKEMOTO — No. 64369 Exp. 06-30-17 — CIVIL — STATE OF CALIFORNIA

0" 1" — VERIFY SCALES — BAR IS ONE INCH LONG ON FULL SIZE DRAWING. IF NOT ONE INCH LONG ON THIS DRAWING, ADJUST SCALES ACCORDINGLY

RMC water and environment

REV	DATE	BY	APVD	DESCRIPTION
1				
2				
3				
4				
5				

DESIGNED M. TAKEMOTO
DRAWN M. TAKEMOTO
CHECKED M. NAKAMOTO

SUBMITTED: MARK TAKEMOTO, RMC PROJECT ENGINEER CE-64369
APPROVED: STEVE CLARY, RMC ENGINEER CE-30318

SAUSALITO · MARIN CITY SANITARY DISTRICT

TREATMENT AND WET WEATHER FLOW UPGRADE

DIESEL TANK AND GAS PURIFIER DEMOLITION

DWG NO D-9
SHEET NO 18 OF 226
PROJ NO 055-006
DATE NOVEMBER 2016

FILENAME: 0055-006-D-9 11-11-16 11:11am CTo || XREFS: X-SMCSD-TBLK | MTakemoto-PE-stamp |<<--

Last Saved By: mtakemoto 3-14-16 09:23am

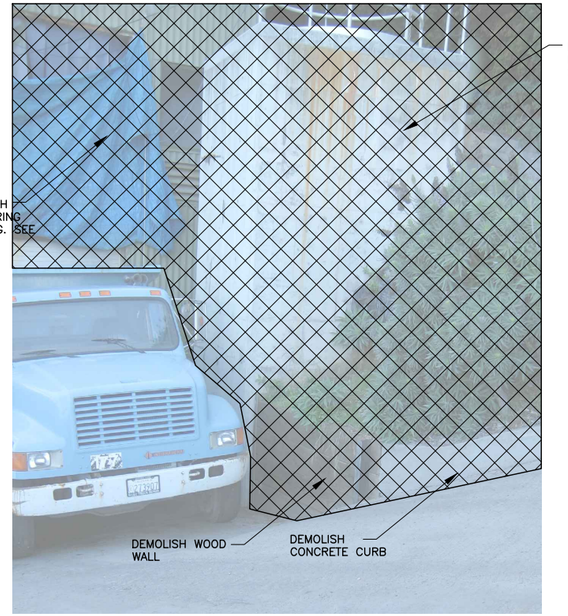

PHOTO 1 D-2

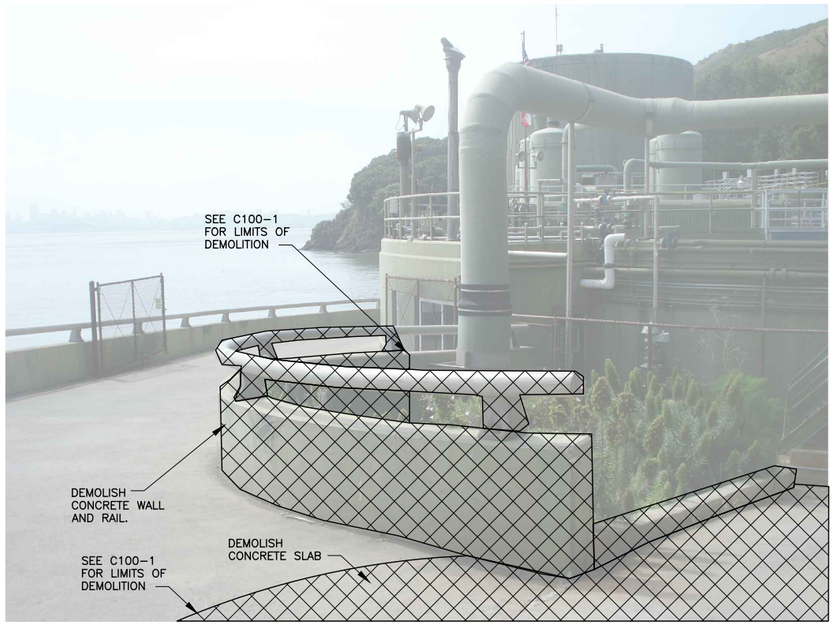

PHOTO 2 D-2

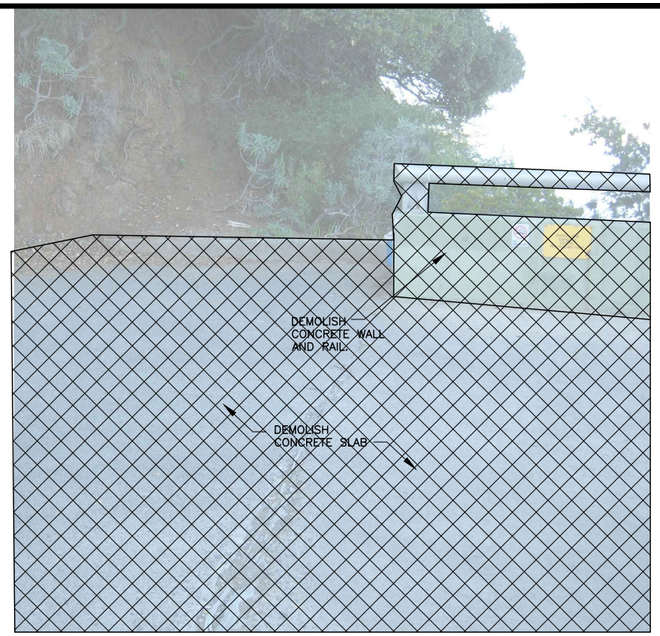

PHOTO 3 D-2



PHOTO 4 D-3

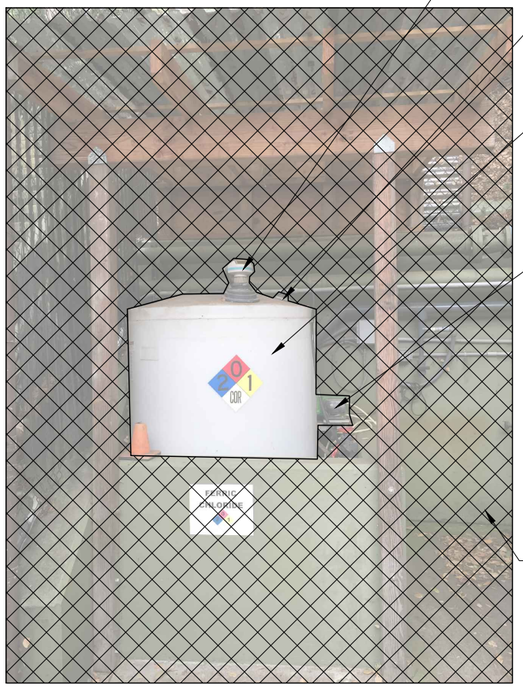

PHOTO 5 D-3

NOTES:

1. LOCATION OF EXISTING UTILITIES SHOWN IS APPROXIMATE. NOT ALL UTILITIES MAY BE SHOWN. CONTRACTOR SHALL VERIFY UTILITY LOCATION AND SERVICE IN THE FIELD PRIOR TO DEMOLITION.
2. FLUID SERVICE TO REMAIN IN SERVICE DURING CONSTRUCTION. TEMPORARY REROUTING REQUIRED. SEE SHEET C21 AND SECTION 01040.
3. ALL WORK SHALL BE PERFORMED IN ACCORDANCE WITH SECTION 01030 AND SECTION 01040.

REGISTERED PROFESSIONAL ENGINEER MARK W. TAKEMOTO No. 64369 Exp. 06-30-17 CIVIL STATE OF CALIFORNIA

0" 1" VERIFY SCALES — BAR IS ONE INCH LONG ON FULL SIZE DRAWING. IF NOT ONE INCH LONG ON THIS DRAWING, ADJUST SCALES ACCORDINGLY

RMC water and environment

REV	DATE	BY	APVD	DESCRIPTION

DESIGNED M. TAKEMOTO
DRAWN M. TAKEMOTO
CHECKED M. NAKAMOTO

SUBMITTED: MARK TAKEMOTO, RMC PROJECT ENGINEER CE-64369
APPROVED: STEVE CLARY, RMC ENGINEER CE-30318

SAUSALITO · MARIN CITY SANITARY DISTRICT

TREATMENT AND WET WEATHER FLOW UPGRADE

MISC. DEMOLITION DETAILS

DWG NO D-10
SHEET NO 19 OF 226
PROJ NO 055-006
DATE NOVEMBER 2016

FILENAME: 0055-006-D-10 11-11-16 11:12am CTo || XREFS: | X-SMCSD-TBLK | MTakemoto-PE-stamp |<<--

Last Saved By: mtakemoto 9-21-16 02:03pm

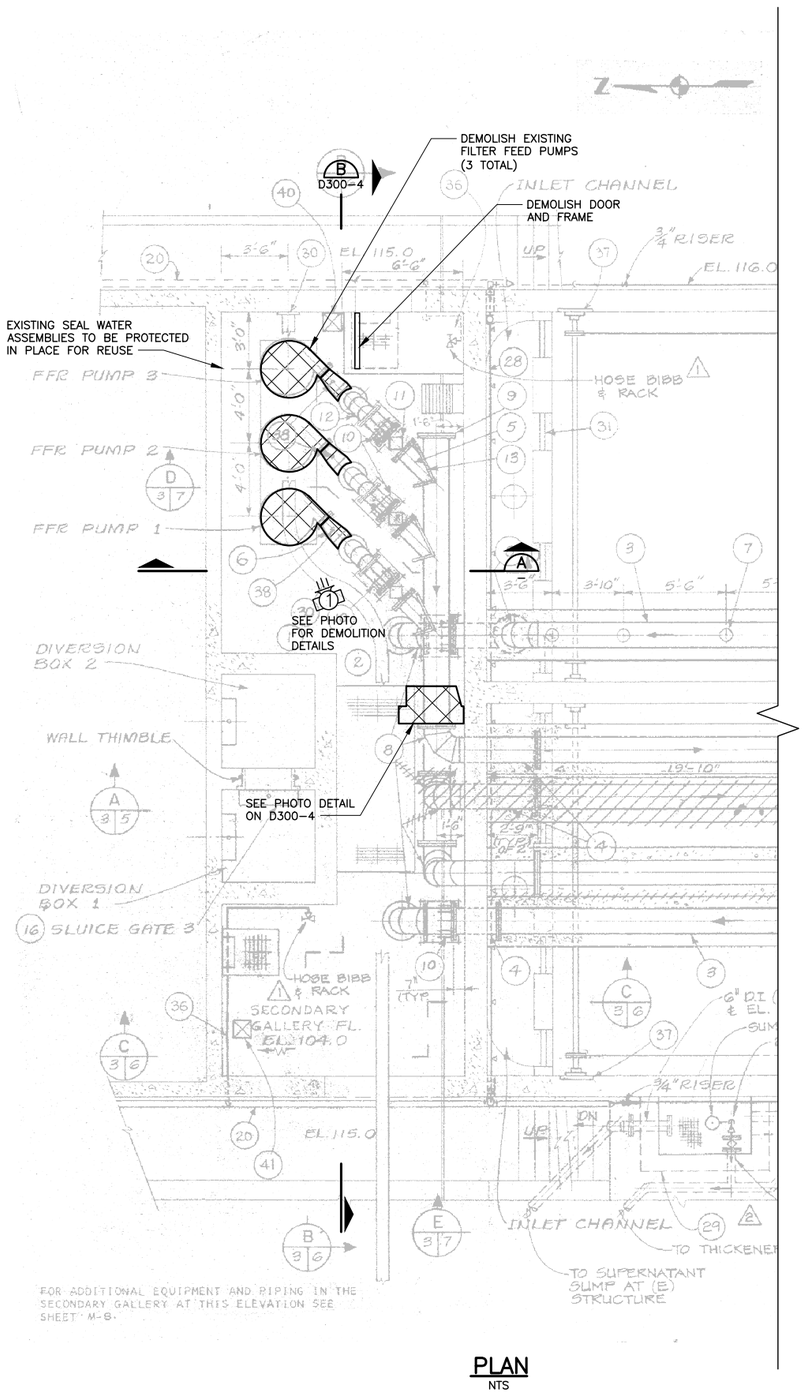

PLAN
NTS

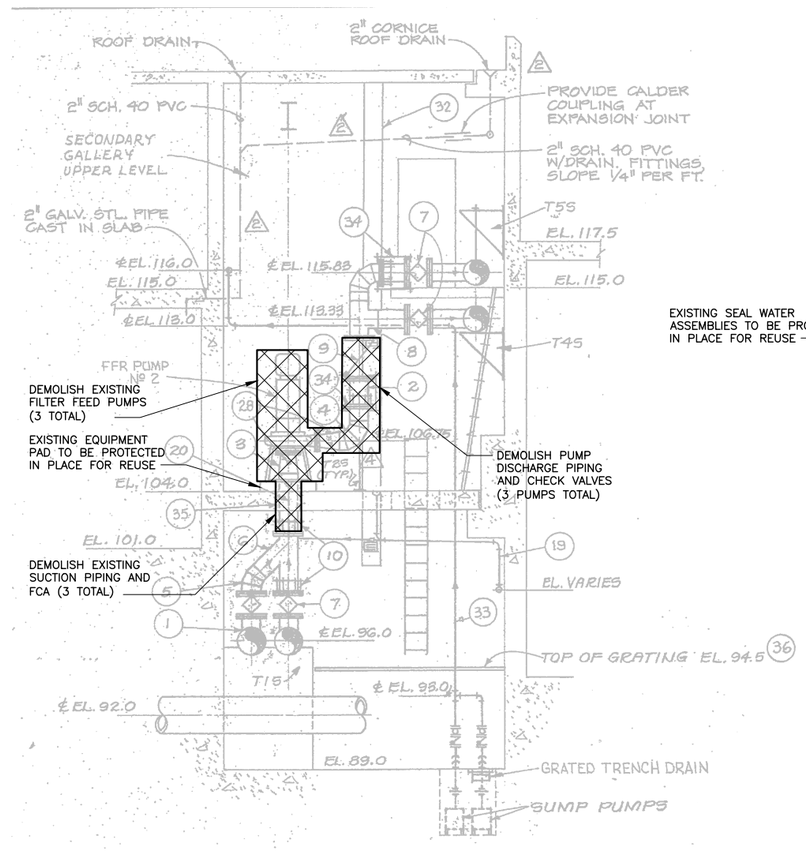

SECTION A
NTS



PHOTO 1

NOTES:

1. CONTRACTOR SHALL DEMOLISH EXISTING FFR PUMPS, PIPING, AND VALVES AS SHOWN.
2. CONSTRUCTION SEQUENCING SHALL BE PERFORMED IN ACCORDANCE WITH SECTION 01040.
3. MECHANICAL BACKGROUND TAKEN FROM 1988 DRAWING SET (SHEETS M-3, M-7, SEE REFERENCE DRAWINGS).
4. REFERENCE DRAWING DATUM IS USGS 1929 MSL+100.

FILENAME: 0055-006-D300-1 11-11-16 11:12am CTo || XREFS: X-SMCSD-TBLK | MTakemoto-PE-stamp |<<--
Last Saved By: SJung 10-12-16 03:01pm

REGISTERED PROFESSIONAL ENGINEER MARK W. TAKEMOTO No. 64369 Exp. 06-30-17 CIVIL STATE OF CALIFORNIA

0" 1" VERIFY SCALES BAR IS ONE INCH LONG ON FULL SIZE DRAWING. IF NOT ONE INCH LONG ON THIS DRAWING, ADJUST SCALES ACCORDINGLY

RMC water and environment

REV	DATE	BY	APVD	DESCRIPTION

DESIGNED M. TAKEMOTO
DRAWN S. JUNG
CHECKED M. NAKAMOTO

SUBMITTED: MARK TAKEMOTO, RMC PROJECT ENGINEER CE-64369
APPROVED: STEVE CLARY, RMC ENGINEER CE-30318

SAUSALITO · MARIN CITY SANITARY DISTRICT

TREATMENT AND WET WEATHER FLOW UPGRADE

FFR PUMP
DEMOLITION PLAN

DWG NO D300-1
SHEET NO 20 OF 226
PROJ NO 055-006
DATE NOVEMBER 2016

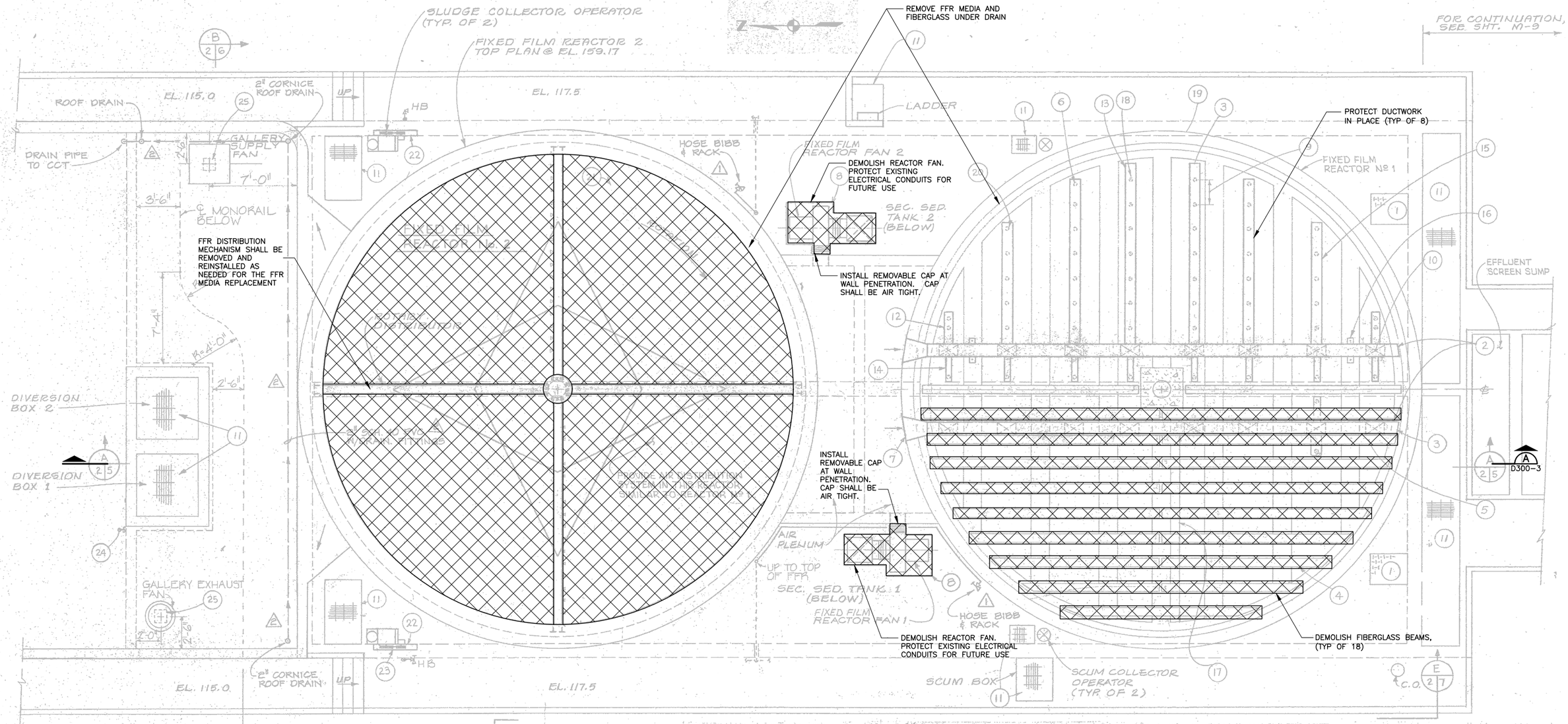

NOTES:

1. WORK SHOWN APPLIES TO BOTH FIXED FILM REACTORS.
2. ONLY ONE FFR MAY BE REMOVED FROM SERVICE AT A TIME. SEE SECTION 01040.
3. ESTIMATED VOLUME OF THE EXISTING FFR MEDIA IS 81,000 CU FT (TOTAL BOTH FFRs).
4. EXISTING MEDIA IS A PLASTIC CROSS FLOW MEDIA.
5. THE FFRS ARE A CONFINED SPACE.
6. MECHANICAL REFERENCE FROM WASTEWATER PLANT IMPROVEMENTS 1988 RECORD DRAWING (M-2) SET (SEE REFERENCE DRAWINGS).
7. REFERENCE DRAWING DATUM USGS 1929 MSL+100.

25. 12" X 12" VENT OPENING. SEE DETAILS 4/2.15 AND 5/2.15

18. 7-2½" DIAMETER OPENINGS IN BOTTOM OF 10" DIAMETER ROUND DUCT. (4 DUCTS PER REACTOR).
19. FIXED FILM REACTOR 1 (SECTIONAL PLAN @ EL. 123.0) FIBERGLASS BEAMS & AIR SYSTEM ARE SYMMETRICAL ABOUT CENTERLINE. SPLIT PLAN SHOWN FOR CLARITY.
20. 5-2½" DIAMETER OPENINGS IN BOTTOM OF 10" DIAMETER ROUND (4 DUCTS PER REACTOR).
21. DUCTWORK SIMILAR (BUT OPPOSITE HAND) TO THAT SHOWN FOR FIXED FILM REACTOR NO. 1.
22. GALVANIZED STEEL GUARD (TYP. AT ALL DRIVES).
23. SEE COLLECTOR MANUFACTURER'S DWGS. FOR SIZE OF OPENING AND RECESS. RECESS NOT TO EXCEED 5-1/2".
24. 1" TV-1P FROM AIR RECEIVER TO BUBBLER PANEL 1. SEE ELECTRICAL DWGS.
11. GRATING (SEE SPECS.) FOR OPENING DIMENSIONS, SEE STRUCTURAL DWGS.
12. 2-2-1/2" DIAMETER OPENINGS IN BOTTOM OF 8" DIAMETER DUCT (4 DUCTS PER REACTOR).
13. 10" DIAMETER DUCT, LENGTH AS SHOWN (12 PER REACTOR).
14. 6" DIAMETER DUCT (16 DUCTS PER REACTOR), 2½" DIAMETER OPENING IN BOTTOM OF EACH.
15. FOR TYPICAL BRANCH DUCT SUPPORT. SEE DETAIL 3/M-33
16. 1/4" X 4" X 4" X 6" LONG PVC ANGLES CONTINUOUS WELDED TO DUCT AND BOLT TO CONCRETE BEAM W/1/4" DIAMETER S.S. BOLTS. 4 PER DUCT MAIN.
17. DUCTWORK IN THIS AREA SIMILAR BUT MIRROR IMAGE TO THAT SHOWN FOR EASTERN HALF OF FIXED FILM REACTOR (ABOVE).

1. 2'-6" X 3'-0" HATCH. (SEE SPECS).
2. 14" X 30" DUCT MAIN. FULL LENGTH OF REACTOR (TWO PER REACTOR).
3. AIR TIGHT CAP (TYP.).
4. FIBERGLASS BEAMS, SEE STRUCTURAL DWGS.
5. FIBERGLASS BEAMS, SUPPORT ALL ROUND PVC DUCT FROM BEAM. SEE DETAIL 2/M-33
6. 7-2½" DIAMETER OPENINGS IN BOTTOM OF 10" DIAMETER ROUND DUCT (4 DUCTS PER REACTOR).
7. DUCT THRU CONCRETE WALL. SEE DETAIL 5/M-33
8. SEE DETAIL 7/M-33
9. AIR DISCHARGE OPENING IN BOTTOM OF 10" DIAMETER DUCT 2'-0" O.C. TYP.
10. 14" X 18" DEEP DUCT DROP. (16 PER REACTOR).

Record Drawing
These record drawings have been prepared, in part, on the basis of information compiled and furnished by others. Kennedy/Jenks/Chilton is not responsible for any errors or omissions in this document as a result of information provided by others.
Dated 4-89, 19 88
RECORD DRAWING

PLAN
NTS

GRAPHIC SCALE

REGISTERED PROFESSIONAL ENGINEER MARK W. TAKEMOTO No. 64369 Exp. 06-30-17 CIVIL STATE OF CALIFORNIA

0" 1" — VERIFY SCALES — BAR IS ONE INCH LONG ON FULL SIZE DRAWING. IF NOT ONE INCH LONG ON THIS DRAWING, ADJUST SCALES ACCORDINGLY

RMC water and environment

REV	DATE	BY	APVD	DESCRIPTION

DESIGNED M. TAKEMOTO
DRAWN S. JUNG
CHECKED M. NAKAMOTO

SUBMITTED: MARK TAKEMOTO, RMC PROJECT ENGINEER CE-64369
APPROVED: STEVE CLARY, RMC ENGINEER CE-30318

SAUSALITO · MARIN CITY SANITARY DISTRICT

TREATMENT AND WET WEATHER FLOW UPGRADE

FFR MEDIA DEMOLITION PLAN

DWG NO D300-2
SHEET NO 21 OF 226
PROJ NO 055-006
DATE NOVEMBER 2016

FILENAME: 0055-006-D300-2 11-11-16 11:12am Cto || XREFS: | X-SMCSD-TBLK | MTakemoto-PE-stamp |<<--

Last Saved By: SJung 10-12-16 03:02pm

NOTES:

1. CONSTRUCTION SEQUENCING SHALL BE PERFORMED IN ACCORDANCE WITH SECTION 01040. THE INTERIOR OF THE FFR STRUCTURE SHALL BE INSPECTED BY THE CONSTRUCTION MANAGER AFTER THE REMOVAL OF THE EXISTING MEDIA.
2. CONTRACTOR SHALL REMOVE AND REINSTALL THE EXISTING AIR DUCT SYSTEM AS REQUIRED TO INSTALL THE NEW FFR MEDIA AND SUPPORT SYSTEM. CONTRACTOR SHALL PROTECT THE AIR DUCTS DURING DEMOLITION. SEE REFERENCE DRAWING M-2 FROM 1988 DRAWINGS FOR EXISTING AIR DUCT LAYOUT.
3. CONTRACTOR SHALL REMOVE AND REINSTALL THE MOTORIZED DISTRIBUTOR MANUFACTURED BY WESTECH AS REQUIRED TO DEMOLISH THE FFR MEDIA AND SUPPORT SYSTEM. REINSTALLED SYSTEMS SHALL BE INSTALLED AND TESTED PER THE MANUFACTURERS INSTRUCTION BY THE CONTRACTOR AND IN ACCORDANCE WITH SECTION 01650.
4. MECHANICAL REFERENCE FROM WASTEWATER PLANT IMPROVEMENTS 1988 RECORD DRAWING (M-5) SET (SEE REFERENCE DRAWINGS).
5. REFERENCE DRAWING DATUM USGS 1929 MSL+100.
6. WORK SHOWN APPLIES TO BOTH FIXED FILM REACTORS.

ROTARY DISTRIBUTOR, TYP. FOR REACTOR 1
PROTECT ROTARY DISTRIBUTOR IN PLACE, TYP.
DEMOLISH FFR MEDIA AND UNDERDRAIN SYSTEM
DISTRIBUTOR NOT SHOWN
EL. 159.7
2"CLR. (TYP.)
TOP OF MEDIA EL. 154.17
FIXED FILM REACTOR 2
FIXED FILM REACTOR 1
FIXED FILM MEDIA
AIR SUPPLY PLENUMS
FOR CONTINUATION SEE SHT. M-9
EXISTING AIR HEADER AND DUCTS. SEE NOTE 2.
SLUICE GATE OPERATORS
STEM COVERS
EL. 127.0
SECONDARY GALLERY UPPER LEVEL
CONTROL BLDG.
SLUICE GATE NO 3
EL. 115.0
CHLORINE CONTACT STRUCTURE
EL 109.0
DIVERSION BOX 1
GRATING
STEM GUIDE (TYP.)
EL. 101.0
EL. 98.0 THICK EFFL.
℄ EL. 96.0 FFR PUMP SUCTION
THIMBLE (TYP.)
℄ EL. 92.0
EL. 89.0
SECONDARY GALLERY LOWER LEVEL
EL. 113.0
INLET CHANNEL
SECONDARY SLUDGE PUMP 2
EL. 107.0
BAR SCREEN SEE DETAIL 1/5/7
PIPE ℄ EL. 101.5
DEMOLISH 10" KNIFE GATE VALVE (2 TOTAL) SEE D300-4
SLUDGE HOPPER
INV. EL. 94.0
SECTION A 8,2,3 4/5
SCUM COLLECTOR
℄ EL. 113.75
EL. 114.0
EFFLUENT LAUNDER
SECONDARY SEDIMENTATION TANK 1
SLUDGE COLLECTOR ← TRAVEL
STEM COVER
SLIDE GATE OPERATOR
EL. 120.0
EL. 117.5
EFFLUENT CHANNEL
EL. 110.0
EFFLUENT SCREEN SUM

SECTION A
1/4" = 1'-0" D300-2

18 SWEEP IN GROUT W/MECHANISM.
19 CONCRETE FILLET. SEE STRUCTURAL DWGS.
20 4" PLUG VALVE.

11 MAKE CONNECTIONS PER DISTRIBUTOR MANUFACTURER'S RECOMMENDATIONS.
12 8" T.X-3P (TYP.).
13 FFR2 AIR DUCT SYSTEM NOT SHOWN. SEE FFR1.
14 30" X 14" DUCT.
15 REACTOR AIR DUCT SYSTEM.
16 SUPPORT ALL DUCTS FROM 8" BEAM 2'-0" O.C. SEE DETAIL 2/M-33
17 FOR DUCT SIZES, ETC. SEE M-2. FOR ISOMETRIC DIAGRAM SEE M-33

1 FIXED FILM REACTORS CUT AT CENTER-LINE ON THIS DWG. FOR CLARITY.
2 24" T.L.P.
3 16" T.X-3P.
4 16" T.X-3P. SEE NOTE 3, SHT. M-3.
5 12" T.X-3P FOR CONTINUATION. SEE SHT. M-3.
6 4" T.N-7P.
7 16" T.X-3P 90° ELL.
8 4" T.N-7P 90° ELL.
9 10" VENTURI FLOW METER. SEE SPECS.
10 16" F.C.A. W/ RESTRAINING RODS.

PROFESSIONAL ENGINEER — REGISTERED — KELLY A. MAUGAN — No. 82686 Exp. 09-30-18 CIVIL — STATE OF CALIFORNIA

PROFESSIONAL ENGINEER — REGISTERED — MARK W. TAKEMOTO — No. 64369 Exp. 06-30-17 CIVIL — STATE OF CALIFORNIA

0" 1" — VERIFY SCALES — BAR IS ONE INCH LONG ON FULL SIZE DRAWING. IF NOT ONE INCH LONG ON THIS DRAWING, ADJUST SCALES ACCORDINGLY

RMC water and environment

REV	DATE	BY	APVD	DESCRIPTION

DESIGNED S. MASUDA
DRAWN S. JUNG
CHECKED M. NAKAMOTO

SUBMITTED: MARK TAKEMOTO, RMC PROJECT ENGINEER CE-64369
APPROVED: STEVE CLARY, RMC ENGINEER CE-30318

SAUSALITO · MARIN CITY SANITARY DISTRICT

TREATMENT AND WET WEATHER FLOW UPGRADE

FFR MEDIA DEMOLITION SECTIONS

DWG NO D300-3
SHEET NO 22 OF 226
PROJ NO 055-006
DATE NOVEMBER 2016

FILENAME: 0055-006-D300-3 11-11-16 11:13am CTo || XREFS: | X-SMCSD-TBLK | MTakemoto-PE-stamp |<<--

Last Saved By: SJung 10-12-16 03:02pm

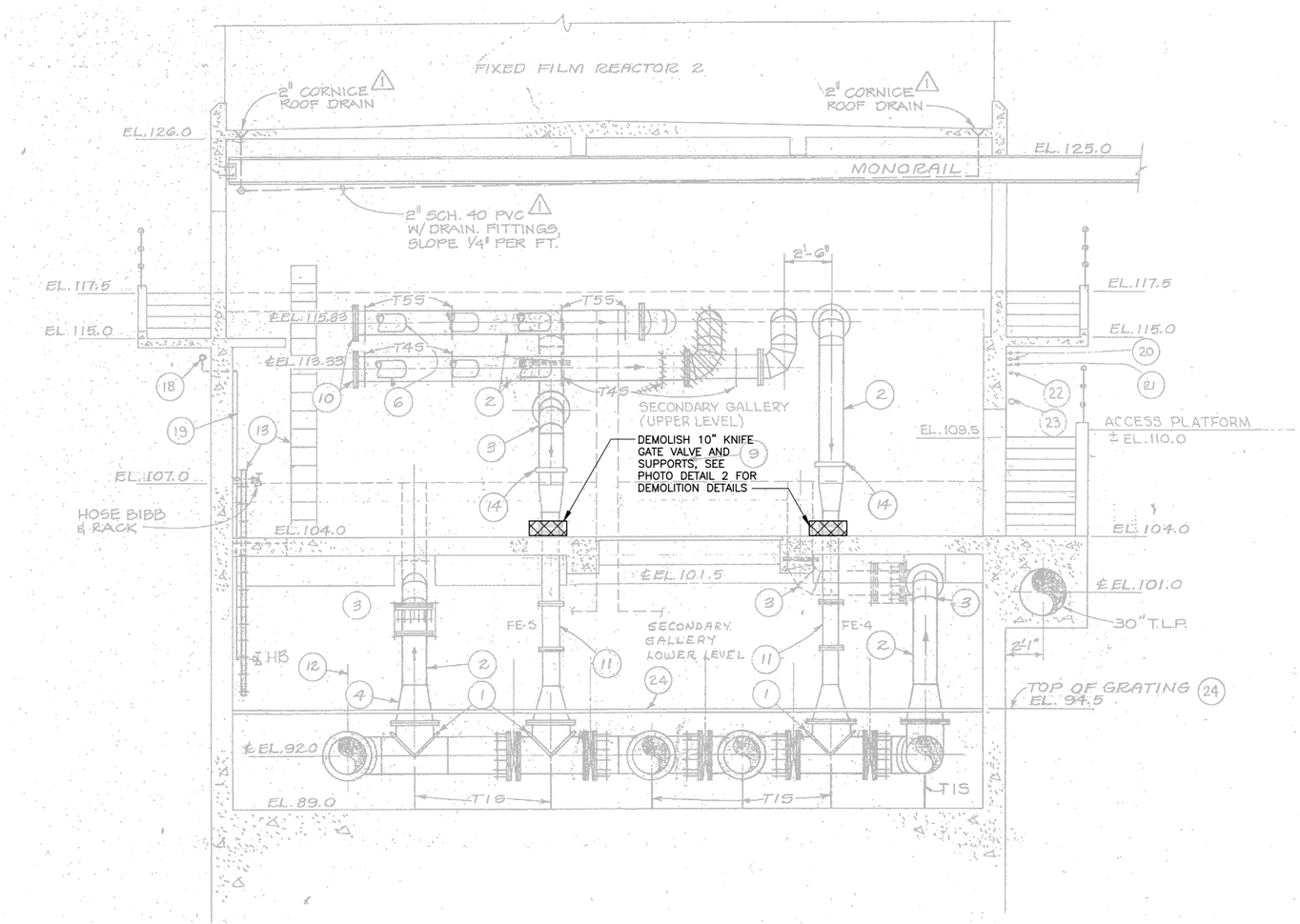

SECTION B
1/4" = 1'-0" D300-1

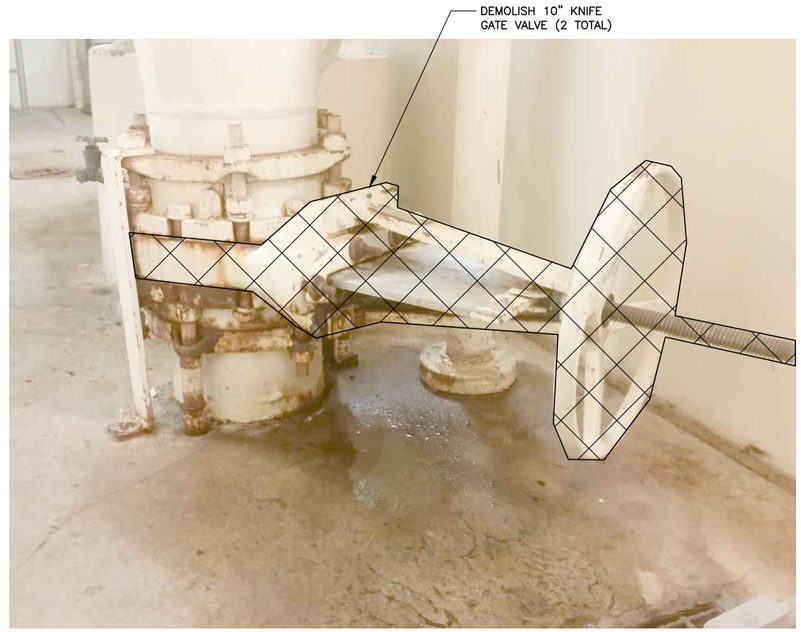

PHOTO 2

FILENAME: 0055-006-D300-3 11-11-16 11:13am CTo || XREFS: | X-SMCSD-TBLK | MTakemoto-PE-stamp |<<--

Last Saved By: SJung 10-12-16 03:02pm

REGISTERED PROFESSIONAL ENGINEER — SHELLY A. MASUDA — No. 62686 — Exp. 09-30-18 — CIVIL — STATE OF CALIFORNIA

REGISTERED PROFESSIONAL ENGINEER — MARK W. TAKEMOTO — No. 64369 — Exp. 06-30-17 — CIVIL — STATE OF CALIFORNIA

0" 1" — VERIFY SCALES — BAR IS ONE INCH LONG ON FULL SIZE DRAWING. IF NOT ONE INCH LONG ON THIS DRAWING, ADJUST SCALES ACCORDINGLY

RMC water and environment

REV	DATE	BY	APVD	DESCRIPTION
1				
2				
3				
4				
5				

DESIGNED	S. MASUDA
DRAWN	S. JUNG
CHECKED	M. NAKAMOTO

SUBMITTED: MARK TAKEMOTO, RMC PROJECT ENGINEER CE-64369

APPROVED: STEVE CLARY, RMC ENGINEER CE-30318

SAUSALITO · MARIN CITY SANITARY DISTRICT

TREATMENT AND WET WEATHER FLOW UPGRADE

FFR PIPING DEMOLITION SECTIONS

DWG NO	D300-4
SHEET NO	23 OF 226
PROJ NO	055-006
DATE	NOVEMBER 2016

NOTES:

1. CONTRACTOR SHALL DEMOLISH EXISTING FILTER PUMPS, SAND FILTERS, PIPING, AND VALVES AS SHOWN.
2. CONSTRUCTION SEQUENCING SHALL BE PERFORMED IN ACCORDANCE WITH SECTION 01040.
3. MECHANICAL BACKGROUND TAKEN FROM 1990 DRAWING SET (SHEETS 3 AND 4 OF 16, SEE REFERENCE DRAWINGS).
4. CONTRACTOR SHALL REMOVE AND DISPOSE OF ALL SAND FILTER EQUIPMENT INCLUDING BUT NOT LIMITED TO PIPES, PUMPS, VALVES, FILTER COMPONENTS AND MEDIA.
5. REFERENCE DRAWING DATUM IS USGS 1929 MSL+100.
6. SEE DWG M400-2 AND M400-3 FOR ADDITIONAL PIPING AND EQUIPMENT TO BE DEMOLISHED.

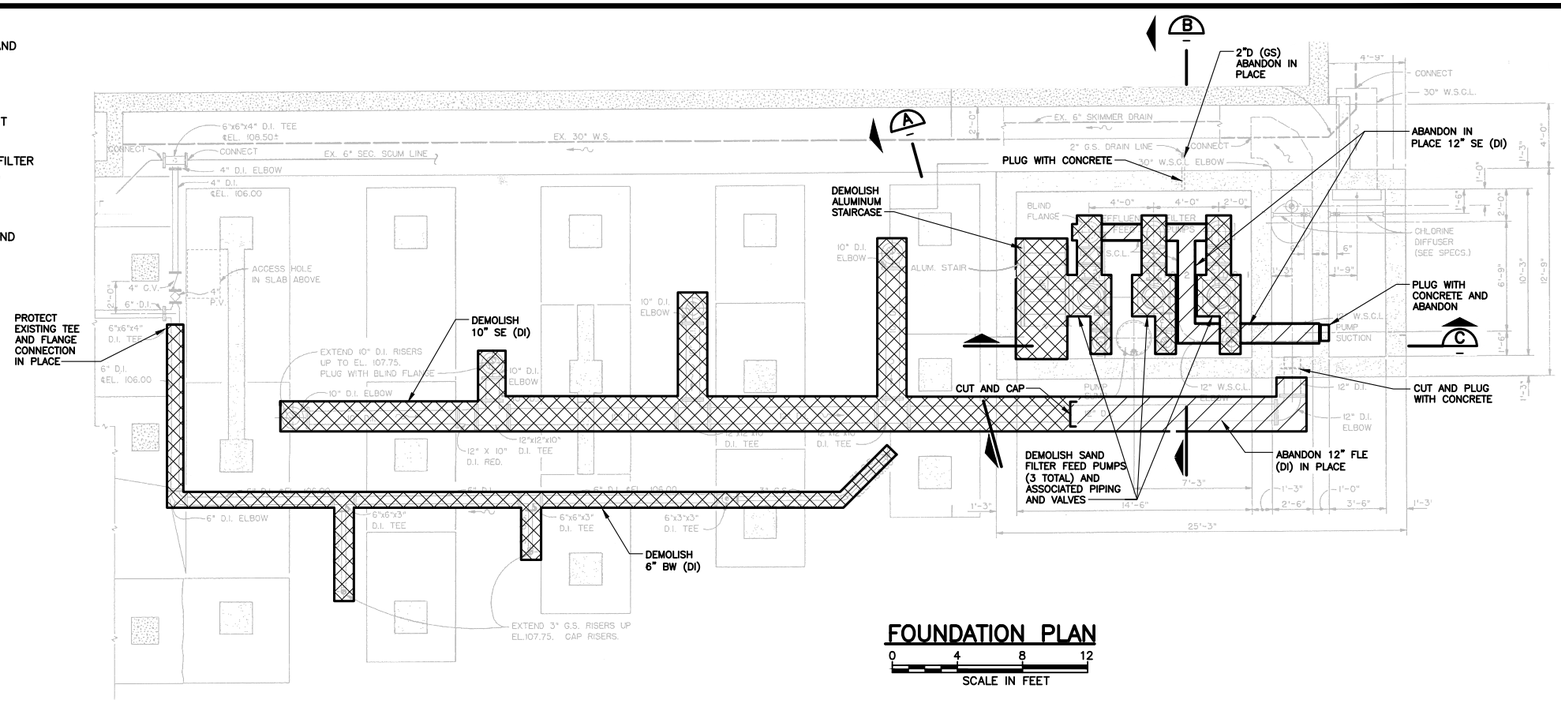

FOUNDATION PLAN

0 4 8 12

SCALE IN FEET

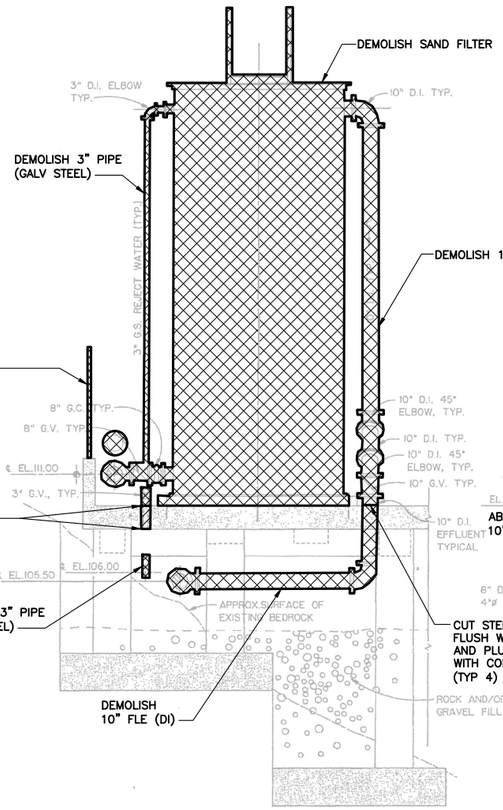

SECTION A

NTS

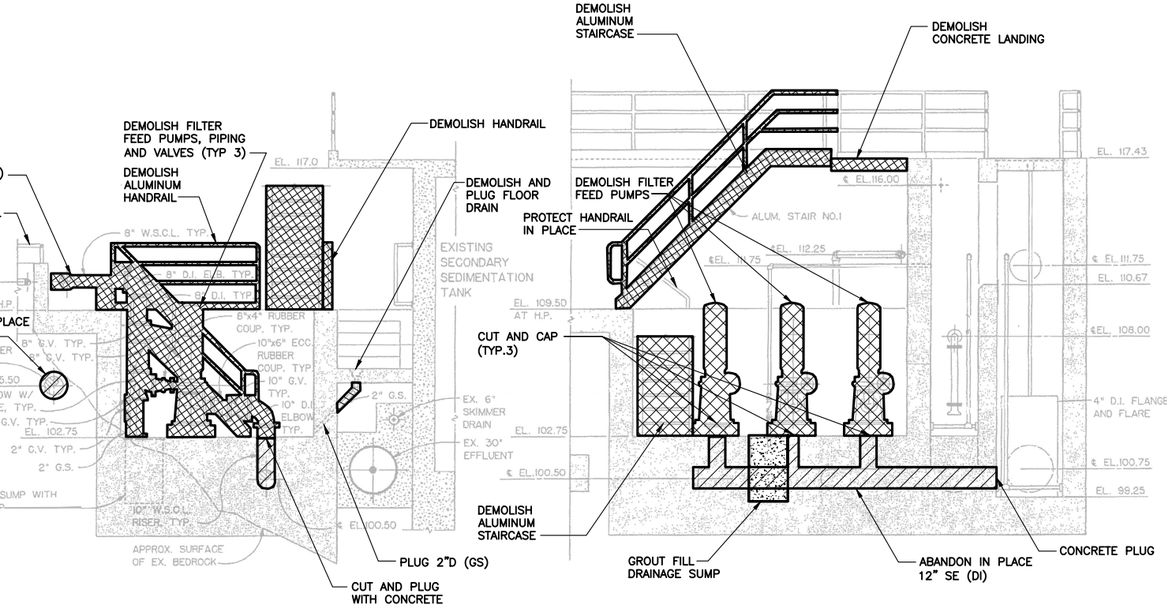

SECTION B

NTS

SECTION C

NTS

NOTES:

1. DRAWING NOT TO SCALE.
2. DEMOLITION REFERENCE FROM 1990 DRAWING (5 OF 19) SET (SEE REFERENCE DRAWINGS). CONTRACTOR SHALL REMOVE STRUCTURE, MECHANICAL EQUIPMENT, AND UTILITIES.
3. UNLESS OTHERWISE NOTED, PIPING WITHIN 10 FEET OF THE STRUCTURE THAT IS TO BE TAKEN OUT OF SERVICE SHALL BE CUT AND REMOVED. REMAINING ABANDONED PIPELINES SHALL BE CAPPED UNLESS OTHERWISE NOTED.
4. REFERENCE DRAWING DATUM IS USGS 1929 MSL+100.

REGISTERED PROFESSIONAL ENGINEER — SHELLY A. MASUDA — No. 82686 Exp. 09-30-18 CIVIL — STATE OF CALIFORNIA

REGISTERED PROFESSIONAL ENGINEER — MARK W. TAKEMOTO — No. 64369 Exp. 06-30-17 CIVIL — STATE OF CALIFORNIA

0" 1" — VERIFY SCALES — BAR IS ONE INCH LONG ON FULL SIZE DRAWING. IF NOT ONE INCH LONG ON THIS DRAWING, ADJUST SCALES ACCORDINGLY

RMC water and environment

REV	DATE	BY	APVD	DESCRIPTION
1				
2				
3				
4				
5				

DESIGNED	S. MASUDA
DRAWN	S. JUNG
CHECKED	M. NAKAMOTO

SUBMITTED: MARK TAKEMOTO, RMC PROJECT ENGINEER CE-64369

APPROVED: STEVE CLARY, RMC ENGINEER CE-30318

SAUSALITO · MARIN CITY SANITARY DISTRICT

TREATMENT AND WET WEATHER FLOW UPGRADE

SAND FILTERS DEMOLITION PLAN & SECTIONS - 1

DWG NO	D400-1
SHEET NO	24 OF 226
PROJ NO	055-006
DATE	NOVEMBER 2016

FILENAME: 0055-006-D400-1 11-17-16 08:42am SJung | XREFS: X-SMCSD-TBLK | MTakemoto-PE-stamp |<<--

Last Saved By: SJung 11-17-16 08:26am

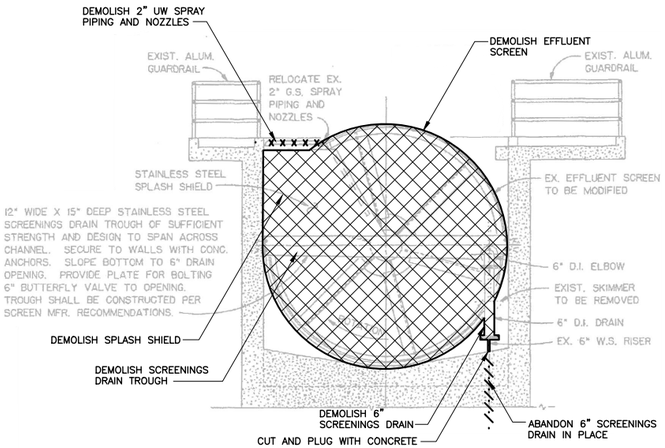

SECTION D
NTS

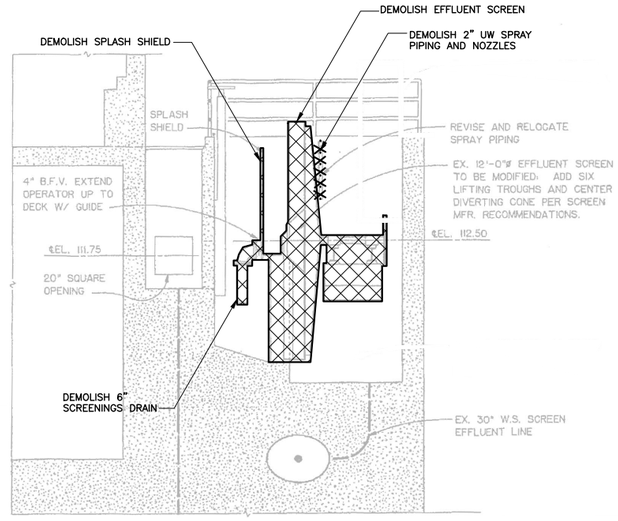

SECTION E
NTS

NOTES:

1. CONTRACTOR SHALL DEMOLISH EXISTING FILTER PUMPS, SAND FILTERS, PIPING, AND VALVES AS SHOWN.
2. CONSTRUCTION SEQUENCING SHALL BE PERFORMED IN ACCORDANCE WITH SECTION 01040.
3. MECHANICAL BACKGROUND TAKEN FROM 1990 DRAWING SET (SHEETS 3 AND 4 OF 16, SEE REFERENCE DRAWINGS).
4. CONTRACTOR SHALL REMOVE AND DISPOSE OF ALL SAND FILTER EQUIPMENT INCLUDING BUT NOT LIMITED TO PIPES, PUMPS, VALVES, FILTER COMPONENTS AND MEDIA.
5. REFERENCE DRAWING DATUM IS USGS 1929 MSL+100.
6. SEE DWG M400-1 AND M400-3 FOR ADDITIONAL PIPING AND EQUIPMENT TO BE DEMOLISHED.
7. DEMOLITION OF AND DISPOSAL OF EFFLUENT SCREEN SHALL NOT BEGIN UNTIL COMMISSIONING OF ROTATING DISC FILTERS. CONSTRUCTION SEQUENCING SHALL BE PERFORMED IN ACCORDANCE WITH SECTION 01040.

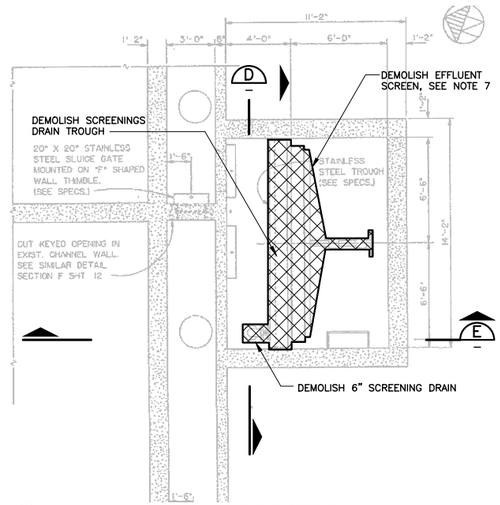

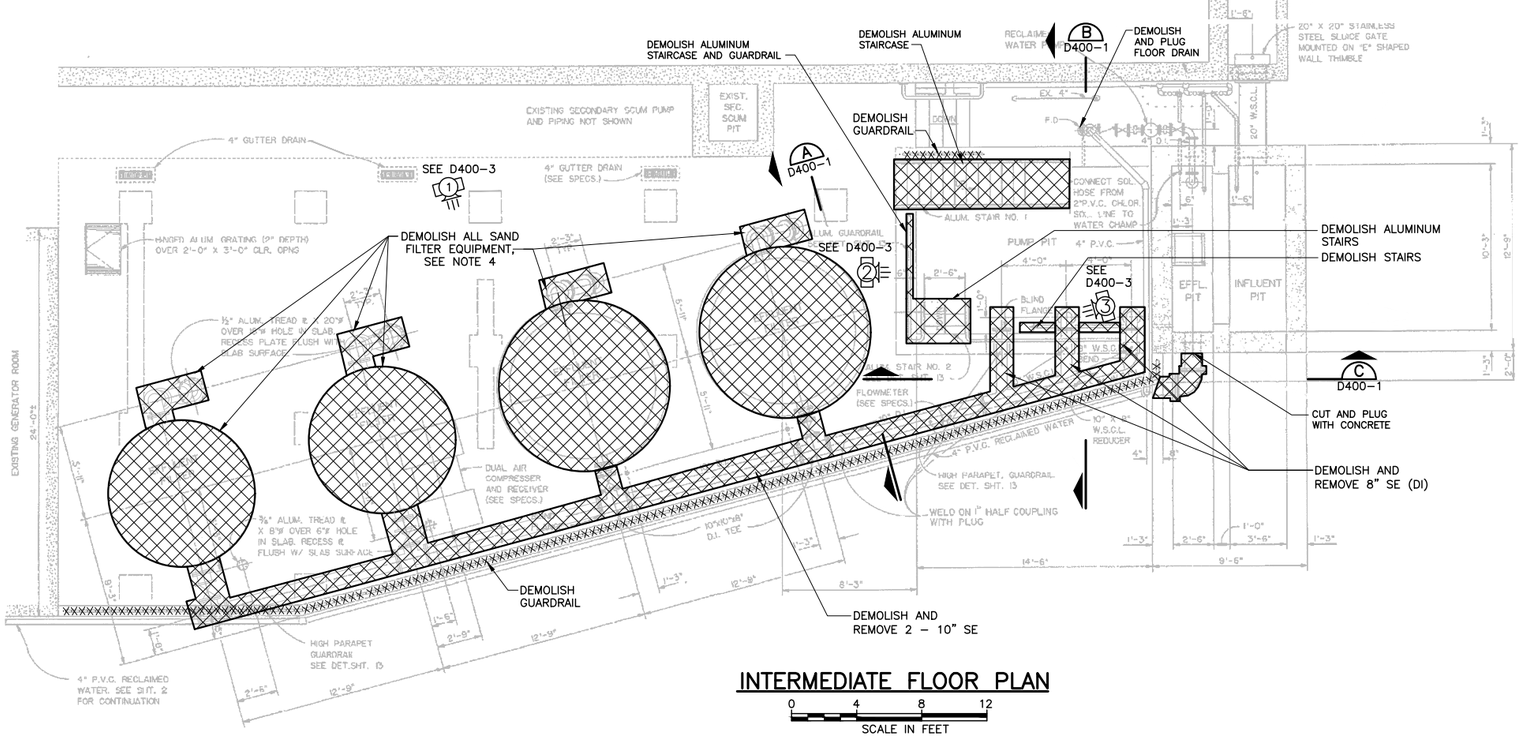

INTERMEDIATE FLOOR PLAN
0 4 8 12
SCALE IN FEET

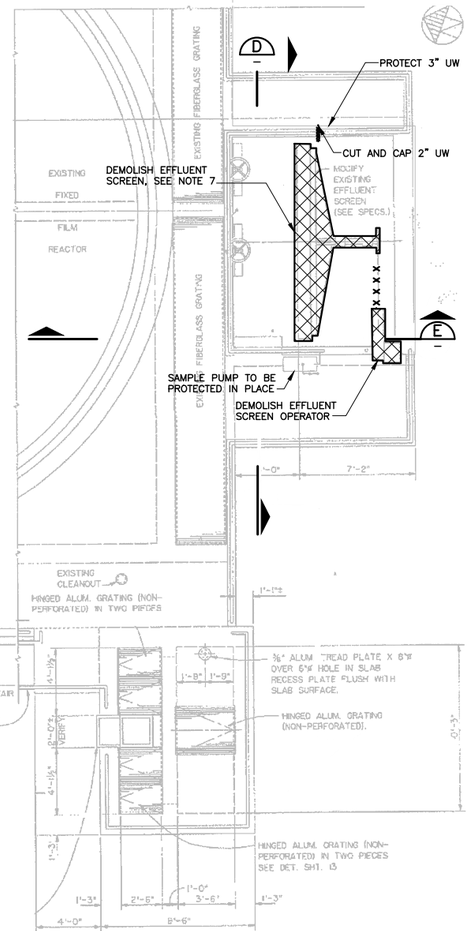

UPPER DECK PLAN
NTS

FILENAME: 055-006-D400-1 11-11-16 11:14am CTo || XREFS: X-SMCSD-TBLK | MTakemoto-PE-stamp |<<--

Last Saved By: SJung 10-12-16 03:03pm

REGISTERED PROFESSIONAL ENGINEER — SHELLY A. MAGDEN — No. 52686 Exp. 09-30-18 CIVIL — STATE OF CALIFORNIA

REGISTERED PROFESSIONAL ENGINEER — MARK W. TAKEMOTO — No. 64369 Exp. 06-30-17 CIVIL — STATE OF CALIFORNIA

0" 1" VERIFY SCALES — BAR IS ONE INCH LONG ON FULL SIZE DRAWING. IF NOT ONE INCH LONG ON THIS DRAWING, ADJUST SCALES ACCORDINGLY

RMC water and environment

REV	DATE	BY	APVD	DESCRIPTION

DESIGNED S. MASUDA
DRAWN S. JUNG
CHECKED M. NAKAMOTO

SUBMITTED: MARK TAKEMOTO, RMC PROJECT ENGINEER CE-64369
APPROVED: STEVE CLARY, RMC ENGINEER CE-30318

SAUSALITO · MARIN CITY SANITARY DISTRICT

TREATMENT AND WET WEATHER FLOW UPGRADE

SAND FILTERS
DEMOLITION PLAN & SECTIONS - 2

DWG NO D400-2
SHEET NO 25 OF 226
PROJ NO 055-006
DATE NOVEMBER 2016

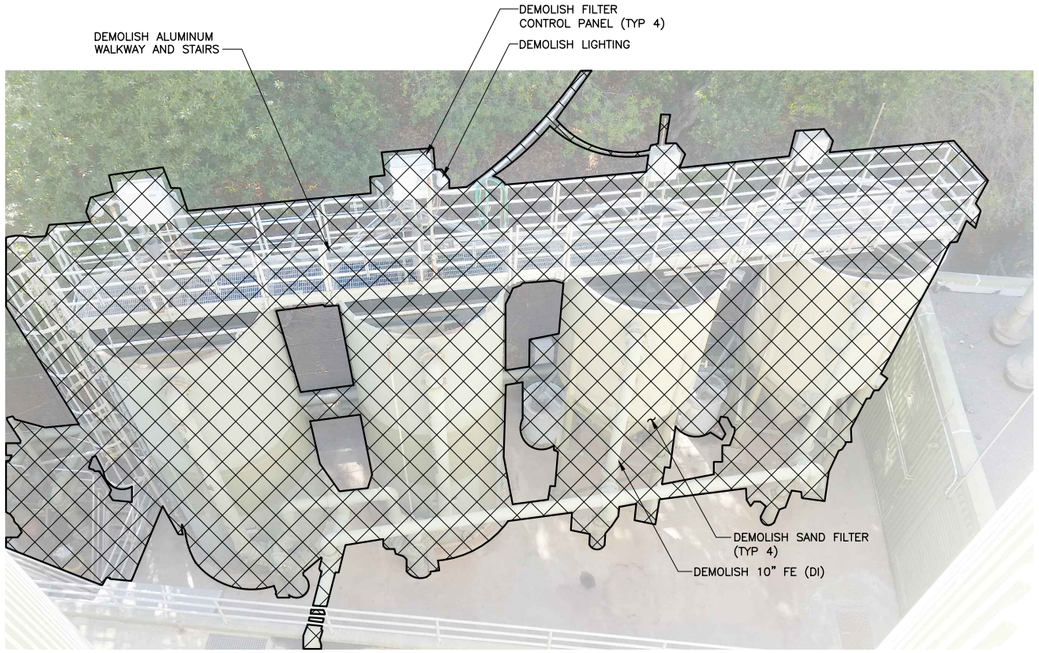

PHOTO 1 D400-1

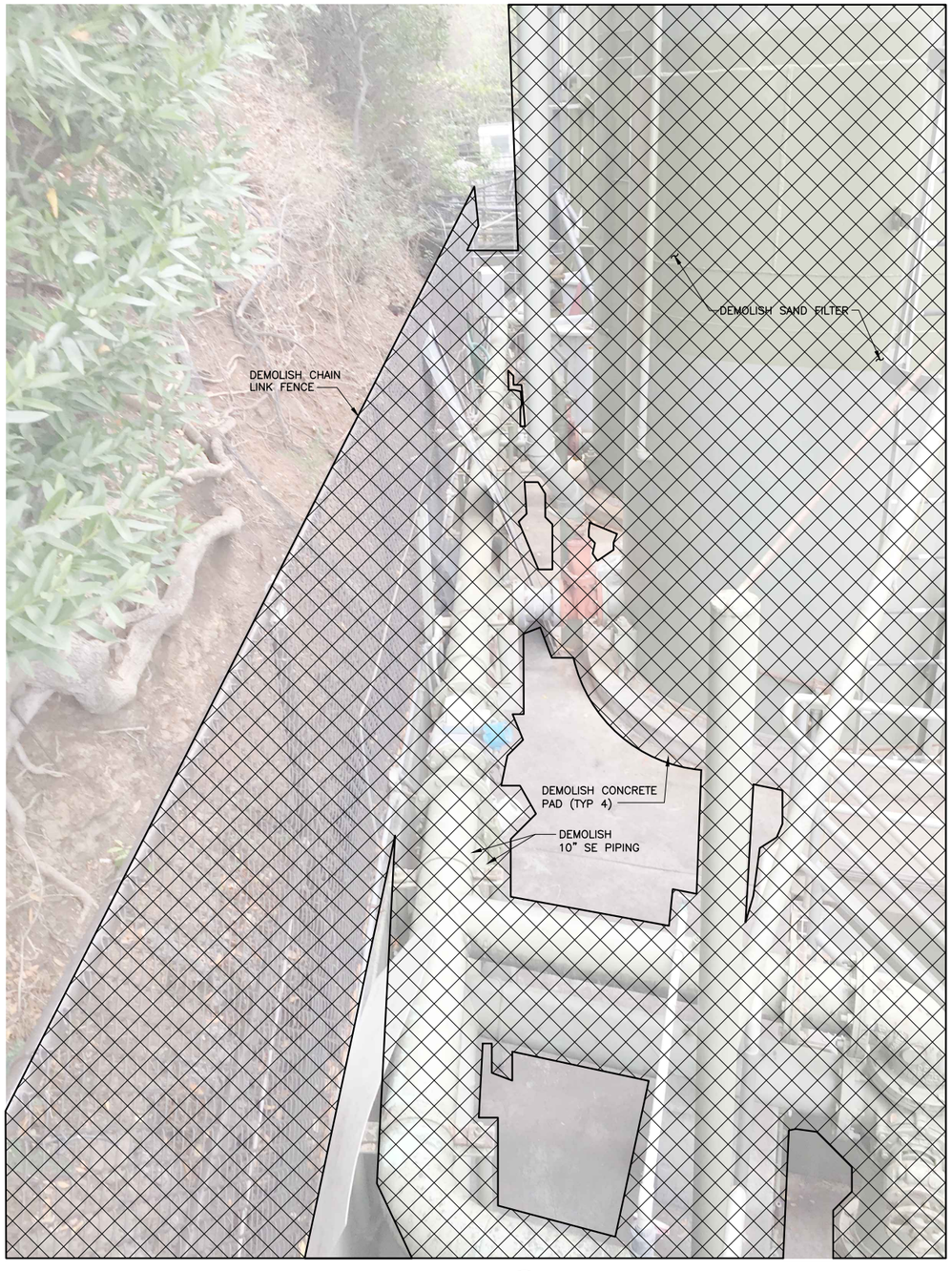

PHOTO 3 D400-1

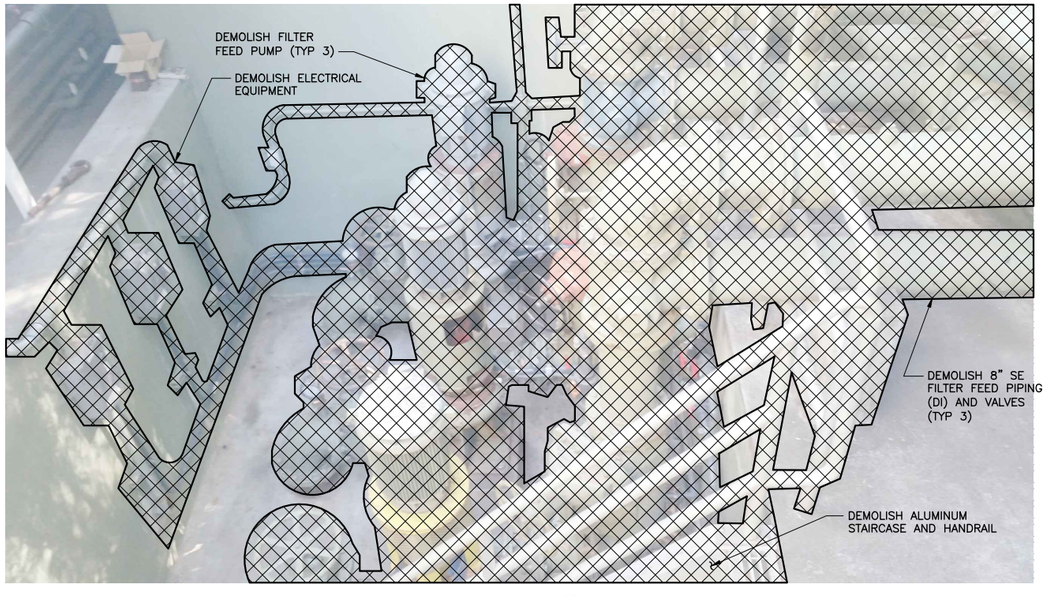

PHOTO 2 D400-1

FILENAME: 055-006-D400-3 11-11-16 11:14am CTo || XREFS: X-SMCSD-TBLK | MTakemoto-PE-stamp |<<--

REGISTERED PROFESSIONAL ENGINEER SHELLY A. MASUDA No. 62686 Exp. 09-30-18 CIVIL STATE OF CALIFORNIA

REGISTERED PROFESSIONAL ENGINEER MARK W. TAKEMOTO No. 64369 Exp. 06-30-17 CIVIL STATE OF CALIFORNIA

0" 1" — VERIFY SCALES — BAR IS ONE INCH LONG ON FULL SIZE DRAWING. IF NOT ONE INCH LONG ON THIS DRAWING, ADJUST SCALES ACCORDINGLY

RMC water and environment

REV	DATE	BY	APVD	DESCRIPTION

DESIGNED S. MASUDA
DRAWN J. MAY
CHECKED M. NAKAMOTO

SUBMITTED: MARK TAKEMOTO, RMC PROJECT ENGINEER CE-64369

APPROVED: STEVE CLARY, RMC ENGINEER CE-30318

SAUSALITO · MARIN CITY SANITARY DISTRICT

TREATMENT AND WET WEATHER FLOW UPGRADE

SAND FILTERS DEMOLITION DETAILS

DWG NO D400-3
SHEET NO 26 OF 226
PROJ NO 055-006
DATE NOVEMBER 2016

Last Saved By: SJung 10-12-16 02:49pm

NOTES:

1. CONTRACTOR SHALL DEMOLISH EXISTING UTILITY WATER PUMPS, PIPING, VALVES, SUPPORTS, AND HANGARS AS SHOWN.
2. CONSTRUCTION SEQUENCING SHALL BE PERFORMED IN ACCORDANCE WITH SECTION 01040.
3. MECHANICAL BACKGROUND TAKEN FROM 1988 DRAWING SET (SHEET M-17, SEE REFERENCE DRAWINGS). THREE PUMPS SHOWN WERE REMOVED AND REPLACED WITH TWO INLINE VERTICAL MULTISTAGE PUMPS. LOCATIONS OF EXISTING PUMPS ARE INDICATED ON PHOTOS 1/- AND 4/-
4. PIPING NOT SHOWN TO BE DEMOLISHED SHALL BE PROTECTED IN PLACE.

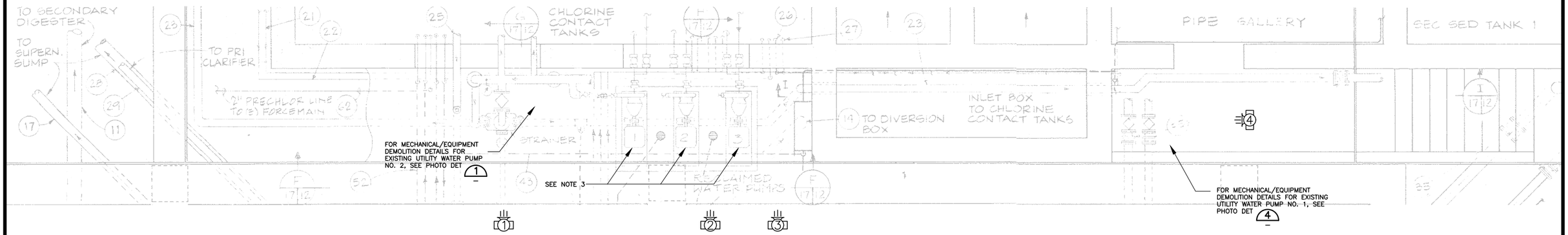

TOP PLAN
NTS

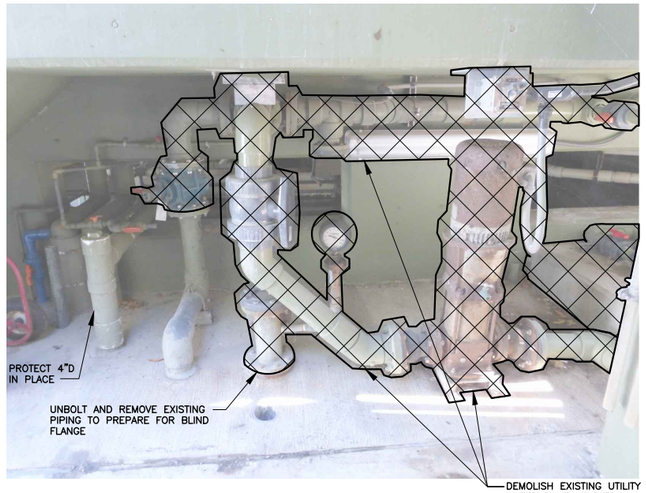

PHOTO 1/-

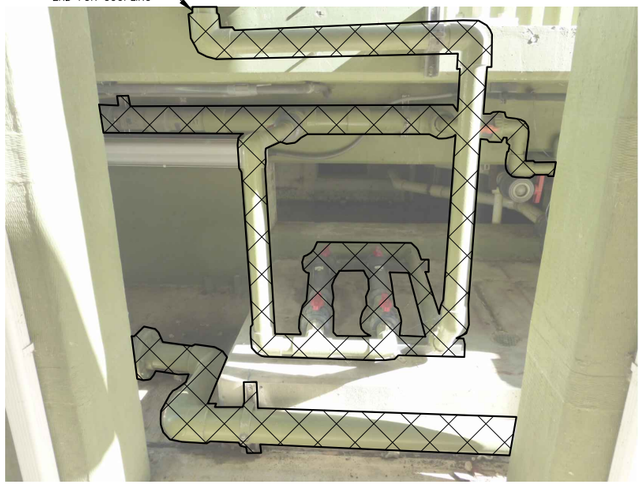

PHOTO 2/-

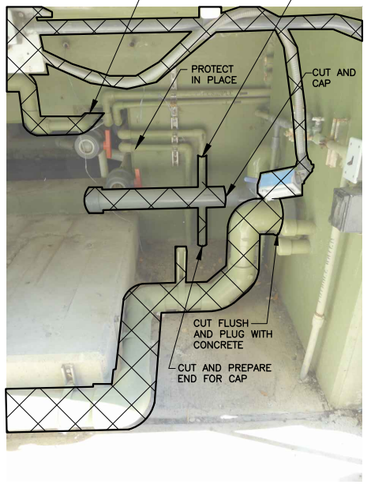

PHOTO 3/-

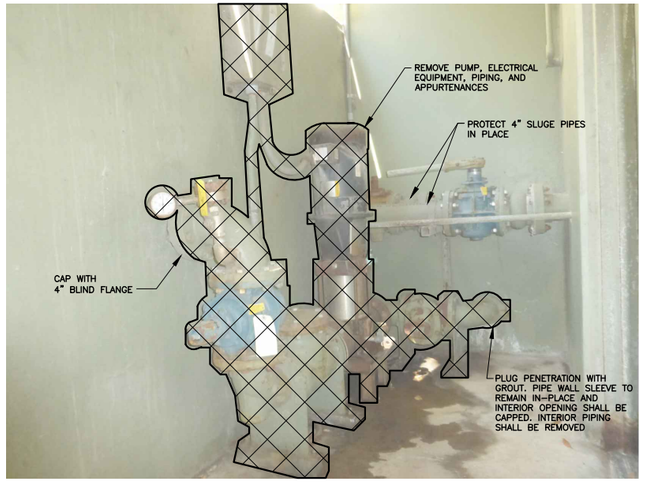

PHOTO 4/-

REGISTERED PROFESSIONAL ENGINEER — SHELLY A. MASUDA — No. 62686 — Exp. 09-30-18 — CIVIL — STATE OF CALIFORNIA

REGISTERED PROFESSIONAL ENGINEER — MARK W. TAKEMOTO — No. 64369 — Exp. 06-30-17 — CIVIL — STATE OF CALIFORNIA

0" — 1" — VERIFY SCALES — BAR IS ONE INCH LONG ON FULL SIZE DRAWING. IF NOT ONE INCH LONG ON THIS DRAWING, ADJUST SCALES ACCORDINGLY

RMC water and environment

REV	DATE	BY	APVD	DESCRIPTION
1				
2				
3				
4				
5				

DESIGNED S. MASUDA
DRAWN J. MAY
CHECKED M. NAKAMOTO

SUBMITTED: MARK TAKEMOTO — RMC PROJECT ENGINEER CE-64369
APPROVED: STEVE CLARY — RMC ENGINEER CE-30318

SAUSALITO · MARIN CITY SANITARY DISTRICT

TREATMENT AND WET WEATHER FLOW UPGRADE

UTILITY WATER PUMP STATION DEMOLITION PLAN

DWG NO D600-1
SHEET NO 27 OF 226
PROJ NO 055-006
DATE NOVEMBER 2016

FILENAME: 055-006-D600-1 11-11-16 11:15am CTo || XREFS: || X-SMCSD-TBLK | MTakemoto-PE-stamp |<<--

Last Saved By: SJung 10-12-16 03:08pm

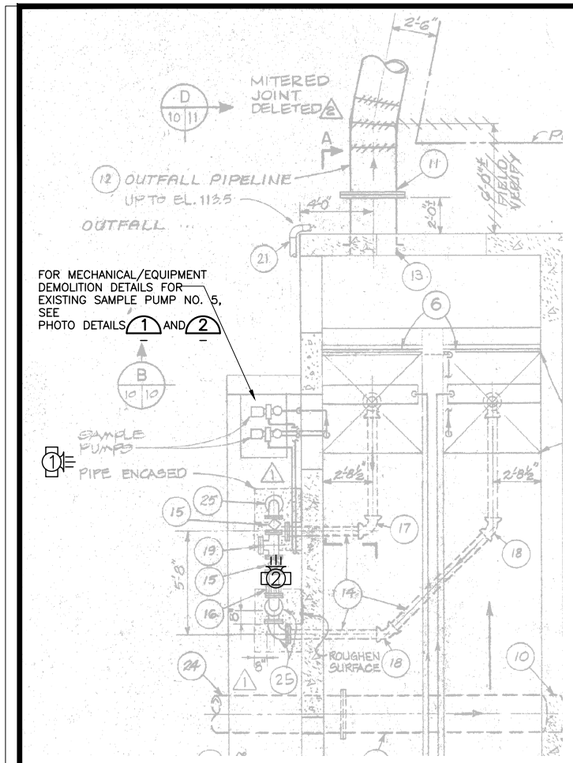

TOP PLAN
NTS

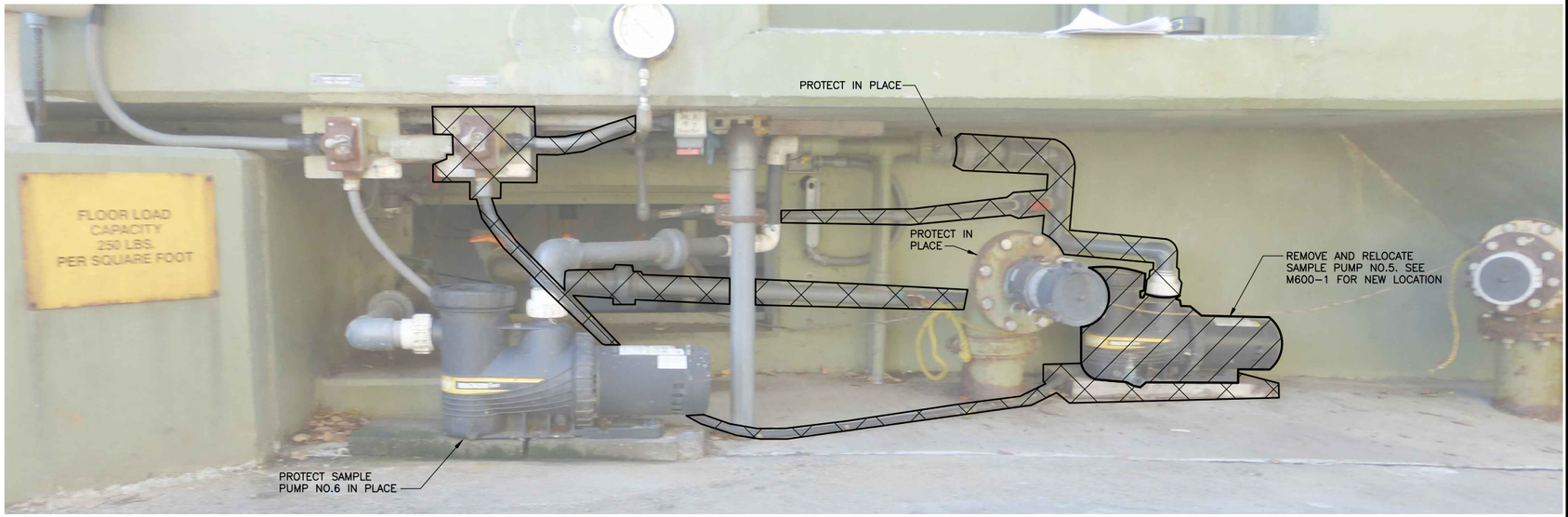

PHOTO 1

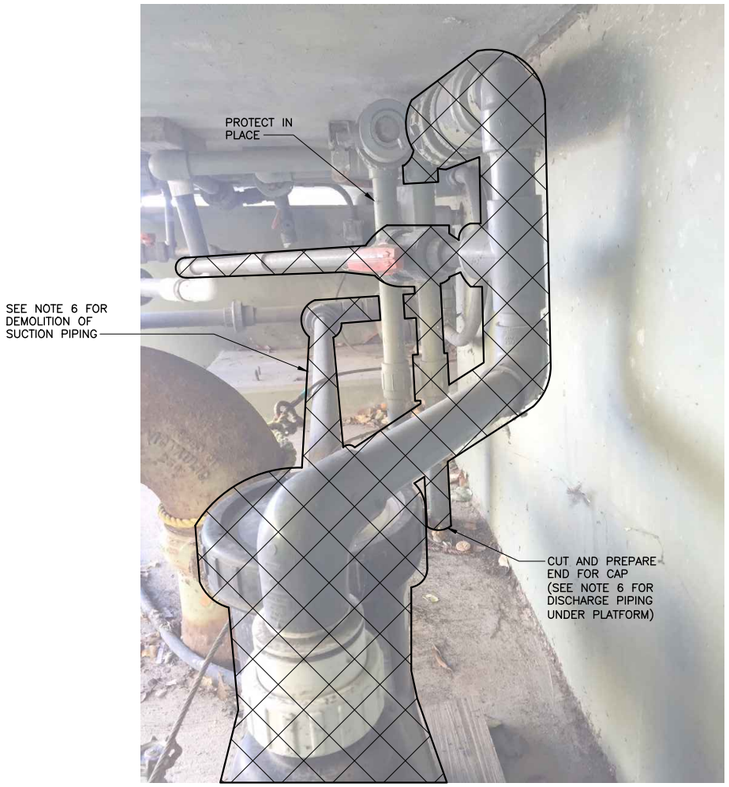

PHOTO 2

NOTES:

1. CONTRACTOR SHALL REMOVE AND RELOCATE EXISTING SAMPLE PUMP AND DEMOLISH PIPING AND VALVES AS SHOWN.
2. CONSTRUCTION SEQUENCING SHALL BE PERFORMED IN ACCORDANCE WITH SECTION 01040.
3. MECHANICAL BACKGROUND TAKEN FROM 1988 DRAWING SET (SHEET M-10, SEE REFERENCE DRAWINGS).
4. REFERENCE DRAWING DATUM IS USGS 1929 MSL +100.
5. CONTRACTOR SHALL REMOVE APPROXIMATELY 33' OF 2" PVC PIPING IN CHLORINE CONTACT TANKS INCLUDING VALVES, SUPPORTS AND HANGARS.
6. CONTRACTOR SHALL REMOVE APPROXIMATELY 53' OF 3/4" PVC PIPING UNDER PLATFORM INCLUDING VALVES, SUPPORTS AND HANGARS. SEE D600-1 FOR EXTENT OF DEMOLITION.

REGISTERED PROFESSIONAL ENGINEER — SHELLY A. MASUDA — No. 52686 Exp. 09-30-18 — CIVIL — STATE OF CALIFORNIA

REGISTERED PROFESSIONAL ENGINEER — MARK W. TAKEMOTO — No. 64369 Exp. 06-30-17 — CIVIL — STATE OF CALIFORNIA

0" 1" — VERIFY SCALES — BAR IS ONE INCH LONG ON FULL SIZE DRAWING. IF NOT ONE INCH LONG ON THIS DRAWING, ADJUST SCALES ACCORDINGLY

RMC water and environment

REV	DATE	BY	APVD	DESCRIPTION
1				
2				
3				
4				
5				

DESIGNED	S. MASUDA
DRAWN	J. MAY
CHECKED	M. NAKAMOTO

SUBMITTED: MARK TAKEMOTO — RMC PROJECT ENGINEER CE-64369

APPROVED: STEVE CLARY — RMC ENGINEER CE-30318

SAUSALITO · MARIN CITY SANITARY DISTRICT

TREATMENT AND WET WEATHER FLOW UPGRADE

SAMPLE PUMP NO.5 DEMOLITION PLAN AND DETAILS

DWG NO	D600-2
SHEET NO	28 OF 226
PROJ NO	055-006
DATE	NOVEMBER 2016

FILENAME: 0055-006-D600-2 11-11-16 11:15am CTo | XREFS: | X-SMCSD-TBLK | MTakemoto-PE-stamp |<--

Last Saved By: SJung 10-12-16 03:09pm

CIVIL LEGEND

B–11	SOIL BORING
18	BENCHMARK/CONTROL POINT
PH10	POTHOLE
	RIGHT OF WAY LINE
105	CONTOUR LINE
	STREET LIGHT (SINGLE ARM)
	STREET LIGHT (DOUBLE ARM)
	STREET SIGN
+ 101.3	SPOT ELEVATION
	SLOPE DIRECTION
X X	FENCE
	FLOW LINE
	EXISTING ABANDONED
	ABANDONED
X X X X X X X X	TO BE REMOVED
	STAGING AREA
	ELECTRICAL AND CONTROL DUCT BANKS
	GRAVEL
	AC PAVING (SECTION)
	CONCRETE PAVING (PLAN)
	NATIVE FILL OR GROUT IN STRUCTURES
	GRIND AND OVERLAY PAVING OR SLURRY SEAL
	GRASS OR LANDSCAPING AREA (TOP SOIL)
	EARTH
	CATCH BASIN
E C	ELECTRICAL OR CONTROL DUCT BANK, JUNCTION BOX
MH	MANHOLE (MH)
	REMOVAL GUARD POST C142

GENERAL GRADING NOTES:

GG1 ALL SPOT ELEVATIONS, SLOPES AND CONTOURS SHOWN ARE APPROXIMATE LOCATION AND CAN BE SCALED FROM THE DRAWING LOCATIONS. SPOT ELEVATIONS SHOWN JUST OUTSIDE BUILDINGS ARE TO BE LOCATED AT THE EXTERIOR ABOVE GROUND FACE OF WALL. SPOT ELEVATION SLOPES AND CONTOURS LOCATED BY DIMENSIONS, STATIONING OR IN PROFILE ARE TO BE ESTABLISHED AS SHOWN.

GG2 TRANSITIONS BETWEEN SLOPES SHALL BE SMOOTH AND UTILIZE VERTICAL CURVES UNLESS NOTED OTHERWISE.

GG3 FINISHED GRADING SHALL DRAIN TO CATCH BASINS. NO PONDING OR STANDING WATER SHALL BE ALLOWED.

GG4 GRADING AND PAVING DRAWINGS SHOW RIM ELEVATIONS FOR CATCH BASINS AND AREA DRAINS. FOR DRAIN PIPE SIZES AND INVERTS SEE YARD PIPING DRAWINGS.

GG5 RIM ELEVATIONS FOR CATCH BASINS ARE ALONG THE FLOWLINE OF GUTTER.

GG6 WHERE GROUND IS DISTURBED CONTRACTOR SHALL INSTALL 4" OF CALIFORNIA CERTIFIED WEED FREE RICE STRAW. STRAW SHALL BE COVERED WITH 600 GR COIR FABRIC. COIR SHALL BE OVERLAPPED BY A MINIMUM 12" AT ALL SEAMS. FABRIC SHALL BE TOED IN TO THE TOP AND BOTTOM OF THE SLOPE AS PER GGNRA BMP HANDBOOK. FABRIC SHALL BE SECURELY STAKED USING A METAL U–STAKE OR WOODEN STAKE, DEPENDING ON FINISH SITE CONDITIONS. STAKES SHALL BE INSTALLED ALONG ALL SEAMS, AS WELL AS THROUGHOUT EROSION CONTROL INSTALLATION TO SECURE FABRIC FIRMLY AND ENSURE NO STRAW MOVEMENT.

GENERAL PAVING NOTES:

GP1 FOR PAVING LOCATIONS SEE GRADING AND PAVING DRAWINGS. SEE ELECTRICAL, MECHANICAL, AND YARD PIPING DRAWINGS FOR UTILITY TRENCH PAVING.

GP2 ALL PAVED AREA SHALL DRAIN TO EXISTING OR NEW CATCH BASIN UNLESS NOTED OTHERWISE.

GP3 WHERE AREAS ARE TO BE REPAVED UTILITY BOXES AND VAULTS SHALL BE PROTECTED IN PLACE. PAVED AREAS SHALL BE GRADED TO DRAIN TO CATCH BASINS UNLESS OTHERWISE NOTED.

GP4 STRIPING SHALL BE IN ACCORDANCE WITH CALTRANS STANDARD SPECIFICATION SECTION 84.

GP5 FOR AREAS IDENTIFIED TO BE GRIND AND OVERLAY PAVING OR SLURRY SEAL OR CRACK SEAL, THE CONTRACTOR SHALL SUBMIT PAVING PLANS TO THE ENGINEER DESIGNATING PAVEMENT RESURFACING PLANS. ENGINEER SHALL RECEIVE AND ACCEPT PLAN.

GENERAL CATHODIC PROTECTION NOTES:

GCP1 CONTRACTOR SHALL INSTALL CATHODIC PROTECTION SYSTEMS AS REQUIRED BY THE SPECIFICATIONS AND IN ACCORDANCE WITH DRAWING CP–1 TO CP–2 AND THE PIPE SCHEDULES ON DRAWING G–6.

GENERAL YARD PIPING NOTES:

GYP1 ALL YARD PIPING SHALL BE AS IDENTIFIED ON YARD PIPING AND MECHANICAL DRAWINGS AND SPECIFICATION SECTION 02500 AND 15000 – PIPING GENERAL.

GYP2 LOCATIONS FOR LARGE YARD PIPE, 12–INCHES IN DIAMETER AND LARGER, ARE IDENTIFIED BY COORDINATES ON THE DRAWINGS.

GYP3 LOCATIONS FOR SMALL YARD PIPE, LESS THAN 12–INCHES IN DIAMETER, ARE APPROXIMATE AND CAN BE SCALED FROM THE DRAWINGS FOR APPROXIMATE LOCATION.

GYP4 ALL DRAINAGE OR GRAVITY FLOW PIPE SHALL MAINTAIN AN AVERAGE SLOPE BETWEEN ELEVATIONS INDICATED ON THE DRAWINGS. THE PIPE MAY BE DEFLECTED TO CLEAR AN INTERFERENCE. IN NO CASE SHALL THE PIPE SLOPE BE LESS THAN 0.0020 UNLESS NOTED OTHERWISE.

GYP5 ALL NEW PRESSURE (NON GRAVITY) PIPE SHALL BE INSTALLED WITH A SLOPE TO ALLOW FREE DRAINAGE TO BLOW–OFF VALVES OR STRUCTURES. ELEVATIONS ON THE DRAWINGS ARE MAXIMUM AND CAN BE LOWERED TO ACCOMMODATE INTERFERENCES, PROVIDED FREE DRAINAGE IS MAINTAINED.

GYP6 SLOPES OF PRESSURE PIPES BETWEEN STRUCTURES, WHEN NO INTERMEDIATE BLOW–OFFS ARE SHOWN, CAN BE ADJUSTED, PROVIDED ADEQUATE ADJUSTMENT EXISTS INSIDE STRUCTURES TO PROVIDE FREE DRAINAGE.

GYP7 ALL PIPES SHALL HAVE A MINIMUM COVER GREATER THAN 2'–6" UNLESS NOTED OTHERWISE.

GYP8 PIPES SHOWN AS CONCRETE ENCASED UNDER STRUCTURES SHALL BE CONCRETE ENCASED TO A MINIMUM HORIZONTAL DISTANCE BEYOND THE STRUCTURE AS SHOWN IN (C254).

GYP9 CONTRACTOR SHALL PROVIDE SUPPORT FOR ALL CROSSING UTILITIES EXPOSED DURING CONSTRUCTION.

GYP10 CONTRACTOR SHALL VERIFY THE TYPE, SIZE AND CONDITION OF EXISTING PIPE PRIOR TO INSTALLING NEW PIPE. THE PIPE SHALL BE INSPECTED FOR CORROSION OR OTHER CONDITIONS THAT WOULD PREVENT AN ADEQUATE CONNECTION.

GYP11 LOCATIONS OF EXISTING PIPES ARE APPROXIMATE. CONTRACTOR SHALL FIELD VERIFY CONNECTION LOCATIONS PRIOR TO STARTING WORK OR DETAILING SHOP DRAWINGS.

GYP12 UNLESS NOTED OTHERWISE ALL PIPES ENTERING OR LEAVING STRUCTURES EXCEPT AIR, GAS, AND SOLVENT WELDED PLASTIC PIPE SHALL BE PROVIDED WITH 2 FLEXIBLE COUPLINGS OR THREE TO FOUR FOOT SECTIONS OF BELL SPIGOT GASKETED PIPE AS SHOWN IN (C234).

GYP13 WHERE BURIED GAS LINES ARE INSTALLED, TWO CONTINUOUS WARNING TAPES SPACED 9–INCHES APART, CENTERED ALONG EACH PIPE, SHALL BE BURIED ONE FOOT BELOW FINISHED GRADE. WHERE GAS LINES CROSS ROADS, WARNING TAPES MAY BE PLACED ON THE SUBGRADE, BELOW ROAD BASE, IN LIEU OF ONE FOOT CRITERIA. IN ADDITION, WARNING SIGNS INDICATING BURIED GAS LINES SHALL BE PLACED ALONG THE PIPELINE ALIGNMENT, SPACED NO FARTHER APART THAN 250 FEET. WHERE GAS PIPELINES ARE BURIED UNDER A ROAD, WARNING SIGNS SHALL BE PLACED ALONG THE SHOULDER AND SHALL INDICATE BURIED GAS LINES UNDER ROAD.

GYP14 NEW ELECTRICAL MANHOLES SHOWN ON ELECTRICAL YARD DRAWINGS ARE SHOWN ON THE YARD PIPING DRAWINGS. THE YARD PIPING AND YARD ELECTRICAL UTILITIES SHALL BE COORDINATED AND SEQUENCED TO MINIMIZE INTERFERENCE DURING CONSTRUCTION. WHERE UTILITIES MUST CROSS UNDER EXISTING OR NEW CONCRETE DUCT BANKS, CONCRETE PIPE, OR OTHER RIGID UTILITIES, UTILITY SUPPORT DETAIL (C248) SHALL BE USED TO FACILITATE INSTALLATION.

GYP15 SOME OF THE SMALL EXISTING UTILITIES THAT ARE ADJACENT TO EACH OTHER ARE REPRESENTED AS A SINGLE LINE.

GYP16 CONTRACTOR SHALL INSTALL 4" OF CALIFORNIA CERTIFIED WEED FREE RICE STRAW. STRAW SHALL BE COVERED WITH 600 GR COIR FABRIC. COIR SHALL BE OVERLAPPED BY A MINIMUM 12" AT ALL SEAMS. FABRIC SHALL BE TOED IN TO THE TOP AND BOTTOM OF THE SLOPE AS PER GGNRA BMP HANDBOOK. FABRIC SHALL BE SECURELY STAKED USING A METAL U–STAKE OR WOODEN STAKE, DEPENDING ON FINISH SITE CONDITIONS. STAKES SHALL BE INSTALLED ALONG ALL SEAMS, AS WELL AS THROUGHOUT EROSION CONTROL INSTALLATION TO SECURE FABRIC FIRMLY AND ENSURE NO STRAW MOVEMENT.

STRUCTURE COORDINATE:

POINT ID.	NORTHING	EASTING
S1	2135783.386	5990756.646
S2	2135658.571	5990684.345
S3	2135735.428	5990699.480
S4	2135759.395	5990705.440
S5	2135807.063	5990772.577
S6	2135837.386	5990782.804
S7	2135837.385	5990799.616
S8	2135799.651	5990799.615
S9	2135793.449	5990783.350
S10	2135647.233	5990741.983
S11	2135565.610	5990790.417
S12	2135559.777	5990781.686
S13	2135802.959	5990710.042
S14	2135805.264	5990704.196
S15	2135744.346	5990680.002
S16	2135738.459	5990678.845
S17	2135640.558	5990683.787
S18	2135629.478	5990679.500
S19	2135565.610	5990790.417
S20	2135559.777	5990781.686

PIPING COORDINATE:

POINT ID.	NORTHING	EASTING	INVERT
P1	2135780.514	5990672.150	CONTRACTOR TO SPEC.
P2	2135779.804	5990675.758	CONTRACTOR TO SPEC.
P3	2135770.400	5990682.072	CONTRACTOR TO SPEC.
P4	2135740.178	5990685.624	CONTRACTOR TO SPEC.
P5	2135754.094	5990688.365	CONTRACTOR TO SPEC.
P6	2135764.018	5990690.316	CONTRACTOR TO SPEC.
P7	2135807.061	5990718.938	CONTRACTOR TO SPEC.
P8	2135820.387	5990732.204	CONTRACTOR TO SPEC.
P9	2135827.162	5990748.457	CONTRACTOR TO SPEC.
P10	2135827.199	5990764.848	CONTRACTOR TO SPEC.
P11	2135820.743	5990780.533	CONTRACTOR TO SPEC.
P12	2135806.428	5990794.912	CONTRACTOR TO SPEC.
P13	2135798.141	5990793.039	CONTRACTOR TO SPEC.
P14	2135778.528	5990805.371	CONTRACTOR TO SPEC.
P15	2135752.888	5990694.501	CONTRACTOR TO SPEC.
P16	2135769.924	5990697.846	CONTRACTOR TO SPEC.
P17	2135820.796	5990772.522	CONTRACTOR TO SPEC.
P18	2135804.127	5990789.266	CONTRACTOR TO SPEC.
P19	2135798.748	5990788.050	CONTRACTOR TO SPEC.
P20	2135773.282	5990804.123	CONTRACTOR TO SPEC.
P21	2135772.821	5990720.018	CONTRACTOR TO SPEC.
P22	2135757.618	5990722.716	CONTRACTOR TO SPEC.
P23	2135753.222	5990745.080	CONTRACTOR TO SPEC.
P20	2135669.372	5990728.594	CONTRACTOR TO SPEC.
P25	2135660.949	5990771.431	CONTRACTOR TO SPEC.
P26	2135610.981	5990788.445	CONTRACTOR TO SPEC.

ROAD COORDINATE:

POINT ID.	NORTHING	EASTING
R1	2135644.049	5990673.337
R2	2135758.872	5990695.911
R3	2135768.539	5990700.069
R4	2135805.122	5990726.090
R5	2135796.608	5990791.740
R6	2135498.909	5990658.153
R7	2135495.698	5990643.481
R8	2135459.107	5990667.425
R9	2135464.688	5990678.118
R10	2135412.873	5990705.156
R11	2135419.225	5990717.329
R12	2135297.158	5990648.387
R13	2135291.573	5990635.148
R14	2135244.485	5990654.536
R15	2135249.623	5990667.213
R16	2135337.093	5990687.940
R17	2135341.601	5990701.918
R18	2135321.191	5990719.822
R19	2135334.880	5990733.615

GENERAL SURVEY NOTES:

CONTROL POINT LIST

POINT	NORTHING	EASTING	ELEVATION
18	2135368.790	5990589.520	109.54
19	2135451.920	5990552.320	119.56

SURVEY NOTES

THE HORIZONTAL DISTANCES AND BASIS OF BEARINGS FOR THIS SURVEY ARE NAD '83, CALIFORNIA COORDINATES, ZONE THREE. ELEVATIONS ARE REFERENCED TO NAVD88 BASED ON U.S.C. & O.S. PT. M108 1932 ELEV = 11.97 NAV88.

MANHOLE AND CATCH BASIN INVERT AND COORDINATE:

POINT ID.	INV.	NORTHING	EASTING
MH1	96.7±	2135646.932	5990574.385
CB2	14.5	2135759.275	5990730.916
CB3	10.5	2135747.975	5990754.780
CB4	7.5	2135662.963	5990735.976
CB5	41.5	2135643.028	5990664.286
CB6	18.0	2135827.762	5990778.051
CB7	19.0	2135803.164	5990796.840
CB8	19.5	2135797.437	5990784.042
CB9	40.5	2135662.427	5990669.832
CB10	40.0	2135656.816	5990682.969

REGISTERED PROFESSIONAL ENGINEER MARK W. TAKEMOTO No. 64369 Exp. 06–30–17 CIVIL STATE OF CALIFORNIA

0" 1" — VERIFY SCALES — BAR IS ONE INCH LONG ON FULL SIZE DRAWING. IF NOT ONE INCH LONG ON THIS DRAWING, ADJUST SCALES ACCORDINGLY

RMC water and environment

REV	DATE	BY	APVD	DESCRIPTION

DESIGNED M. TAKEMOTO
DRAWN C. TO
CHECKED M. NAKAMOTO

SUBMITTED: MARK TAKEMOTO, RMC PROJECT ENGINEER CE-64369
APPROVED: STEVE CLARY, RMC ENGINEER CE-30318

SAUSALITO · MARIN CITY SANITARY DISTRICT

TREATMENT AND WET WEATHER FLOW UPGRADE

CIVIL LEGEND AND NOTES

DWG NO C-1
SHEET NO 29 OF 226
PROJ NO 055-006
DATE NOVEMBER 2016

FILENAME: 0055-006-C-1 11-16-16 08:56am CTo || XREFS:| X-SMCSD-TBLK | MTakemoto-PE-stamp |<<--

Last Saved By: CTo 11-15-16 03:10pm

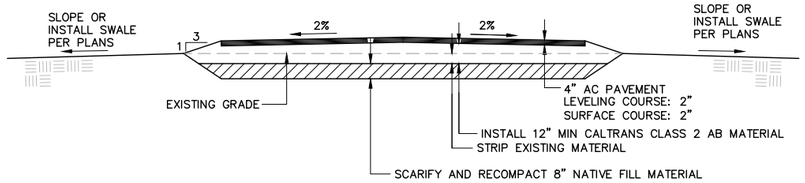

TYPICAL ROAD SECTION – CROWNED – NO CURBS C102

NTS

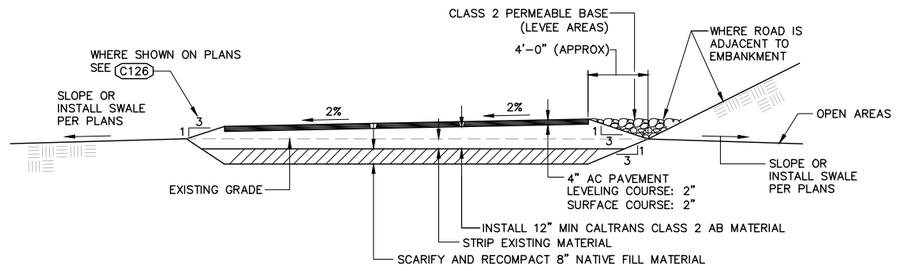

TYPICAL ROAD SECTION – UNIFORM SLOPE – NO CURBS C103

NTS

TYPICAL ROAD SECTION – UNIFORM SLOPE – CURBED C104

NTS

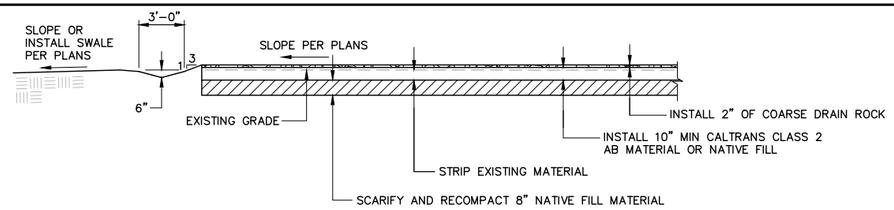

NOTES:

1. FOR CONSTRUCTION STAGING, INSTALL FIRST 8" OF CLASS 2 AB OR NATIVE FILL TOPPED WITH 2" GRAVEL. AFTER CONSTRUCTION TRAILERS, EQUIPMENT AND MATERIALS ARE DEMOBILIZED FROM THIS AREA, REPAIR ALL DAMAGE, THEN SCARIFY AND RECOMPACT TOP 4" OF MATERIAL, AND TOP WITH 2" OF ADDITIONAL COARSE DRAIN ROCK. SLOPE PER PLANS.

STAGING AREA C105

NTS

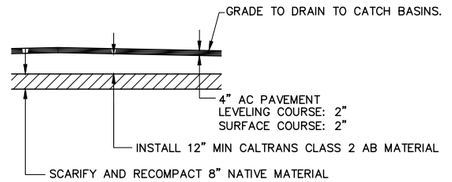

NOTES:

1. EXISTING GRADES SHALL BE CUT OR FILLED AS REQUIRED.
2. EXISTING PAVED AREAS SHALL BE SAW CUT AND PAVEMENT AND UNSUITABLE MATERIAL SHALL BE REMOVED.

TYPICAL PAVED AREA C107

NTS

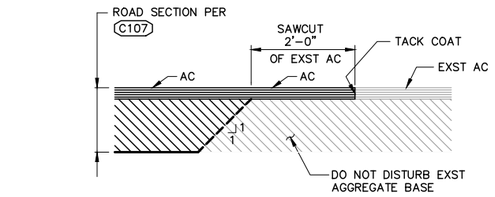

ELEVATION

NEW/ EXST AC ROAD TRANSITION C109

NTS

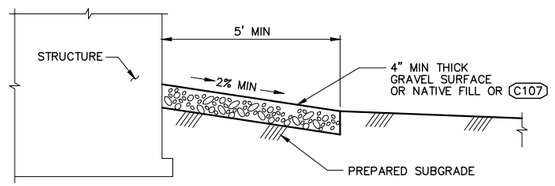

ELEVATION

NOTES:

1. SUBGRADE BENEATH GRAVEL SHALL BE SLOPED SAME AS SURFACE.

TYPICAL GRADING AT STRUCTURES C110

NTS

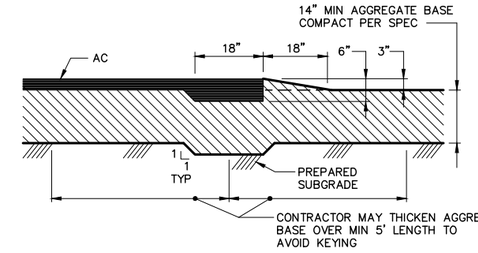

ELEVATION

AC ROAD/GRAVEL ROAD TRANSITION C108

NTS

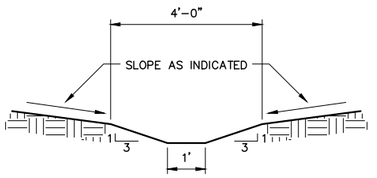

TYPICAL SWALE SECTION

TYPICAL SWALE ELEVATIONS C114

NTS

REGISTERED PROFESSIONAL ENGINEER
MARK W. TAKEMOTO
No. 64369
Exp. 06-30-17
CIVIL
STATE OF CALIFORNIA

0" 1"
VERIFY SCALES
BAR IS ONE INCH
LONG ON FULL
SIZE DRAWING.
IF NOT ONE INCH
LONG ON THIS
DRAWING, ADJUST
SCALES ACCORDINGLY

RMC water and environment

REV	DATE	BY	APVD	DESCRIPTION

DESIGNED M. TAKEMOTO
DRAWN C. TO
CHECKED M. NAKAMOTO

SUBMITTED: MARK TAKEMOTO
RMC PROJECT ENGINEER CE-64369

APPROVED: STEVE CLARY
RMC ENGINEER CE-30318

SAUSALITO · MARIN CITY SANITARY DISTRICT

TREATMENT AND WET WEATHER FLOW UPGRADE

CIVIL STANDARD DETAILS - 1

DWG NO C-2
SHEET NO 30 OF 226
PROJ NO 055-006
DATE NOVEMBER 2016

FILENAME: 0055-006-C-2 11-11-16 10:14am CTo | XREFS: | X-SMCSD-TBLK | MTakemoto-PE-stamp |<<--

Last Saved By: mtakemoto 3-14-16 10:00am

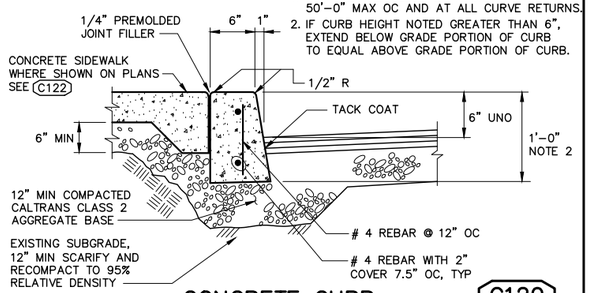

CONCRETE CURB C120

NTS

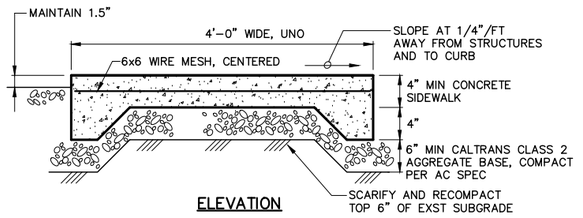

ELEVATION

NOTES:

1. PROVIDE CONTROL JOINTS AT 4' MAX CENTERS.
2. PROVIDE PREMOLDED EXPANSION JOINTS AT 20'-0" MAX ON OC AND AT ALL CORNERS.

SIDEWALK C122

NTS

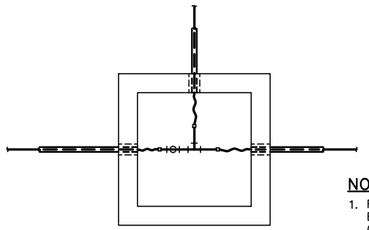

PLAN

NOTES:

1. FOR ORIENTATION OF BOX AND PIPING SEE CIVIL DRAWINGS.

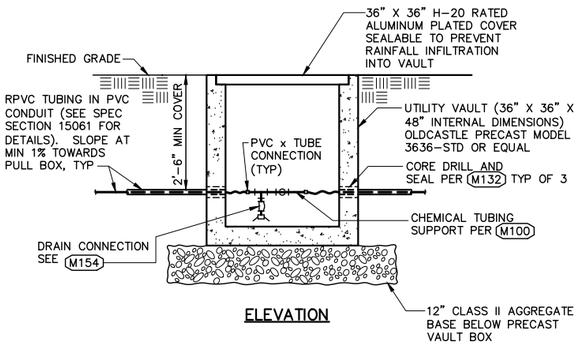

ELEVATION

CHEMICAL TUBING PULL BOX C128

NTS

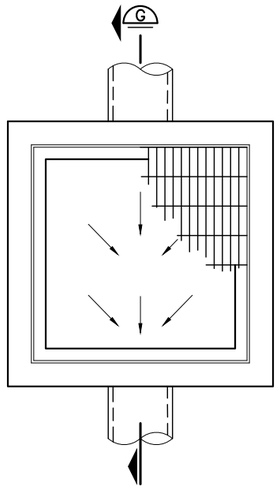

PLAN

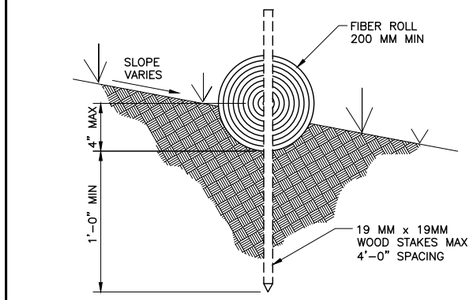

ENTRENCHMENT DETAIL

N.T.S.

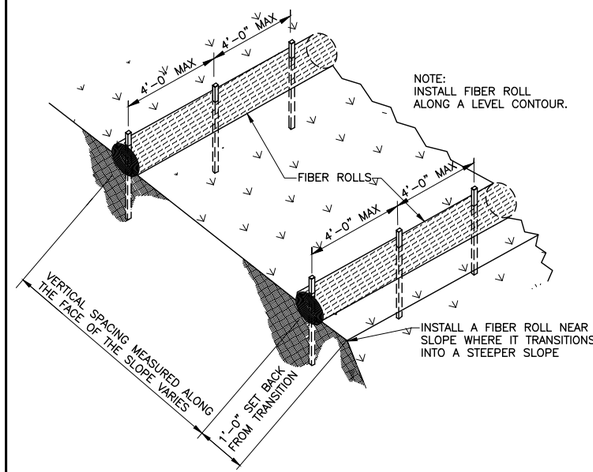

TYPICAL FIBER ROLL INSTALLATION

N.T.S.

TYPICAL FIBER ROLL INSTALLATION C183

NTS

NOTE:
PROVIDE PREMOLDED EXPANSION JOINTS AT 50'-0" MAX OC AND AT ALL CORNERS.

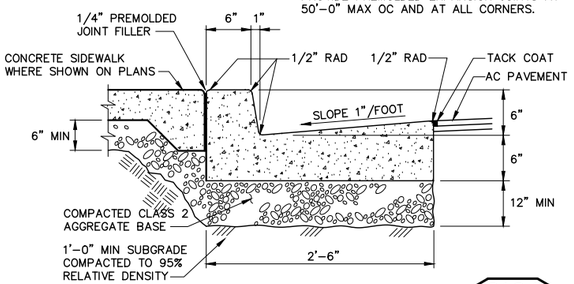

CONCRETE CURB AND GUTTER C124

NTS

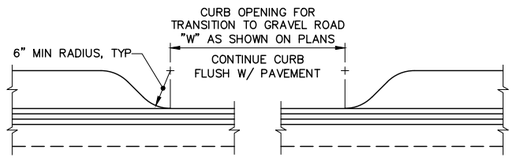

CONCRETE CURB OPENING C143

NTS

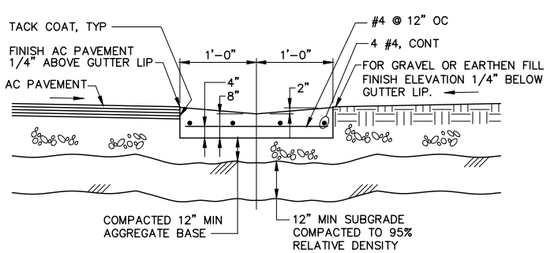

CONCRETE VALLEY GUTTER C126

NTS

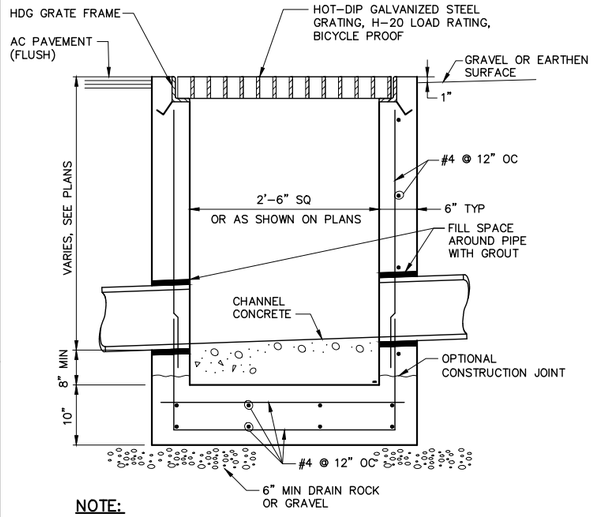

NOTE:

1. PRECAST CATCH BASIN IS ACCEPTABLE ALTERNATIVE WITH ENGINEER APPROVAL. DIMENSION MAY BE MODIFIED FOR STANDARD PRECAST PRODUCTS.
2. PRECAST CATCH BASIN SHALL BE H-20 LOAD.

SECTION G

NTS

TYPICAL CATCH BASIN C182

NTS

FILENAME: 0055-006-C-2 11-11-16 10:14am CTo | XREFS: | X-SMCSD-TBLK | MTakemoto-PE-stamp |<<--

REGISTERED PROFESSIONAL ENGINEER — MARK W. TAKEMOTO — No. 64369 — Exp. 06-30-17 — CIVIL — STATE OF CALIFORNIA

0" 1" — VERIFY SCALES — BAR IS ONE INCH LONG ON FULL SIZE DRAWING. IF NOT ONE INCH LONG ON THIS DRAWING, ADJUST SCALES ACCORDINGLY

RMC water and environment

REV	DATE	BY	APVD	DESCRIPTION
1				
2				
3				
4				
5				

DESIGNED M. TAKEMOTO
DRAWN C. TO
CHECKED M. NAKAMOTO

SUBMITTED: MARK TAKEMOTO, RMC PROJECT ENGINEER CE-64369
APPROVED: STEVE CLARY, RMC ENGINEER CE-30318

SAUSALITO · MARIN CITY SANITARY DISTRICT

TREATMENT AND WET WEATHER FLOW UPGRADE

CIVIL STANDARD DETAILS - 2

DWG NO C-3
SHEET NO 31 OF 226
PROJ NO 055-006
DATE NOVEMBER 2016

Last Saved By: mtakemoto 3-14-16 10:00am

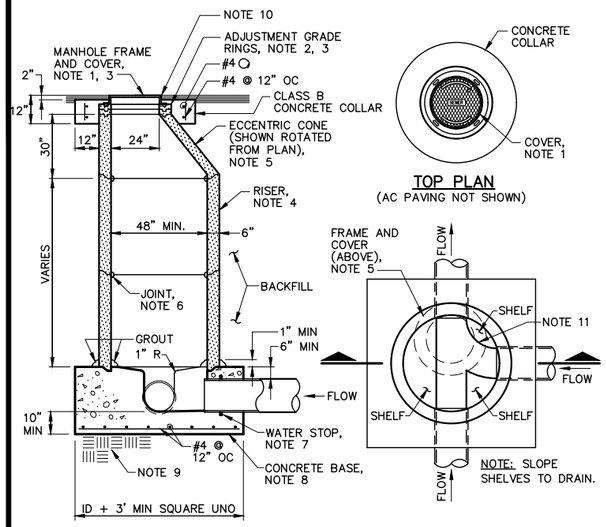

SECTION

TOP PLAN
(AC PAVING NOT SHOWN)

LOWER PLAN

NOTES:

1. MANHOLE FRAME AND COVER SHALL HAVE 30" MIN CLEAR OPENING AND SEALED BLIND PICK HOLE. COVER SHALL BE LABELED "SEWER" AND SHALL BE RATTLE FREE WITHOUT USE OF SEALANT.
2. TOP OF CONE TO TOP OF FRAME SHALL NOT EXCEED 15". ADJUSTMENT GRADE RINGS SHALL BE 3" OR 6" DEEP.
3. GRADE RINGS AND MANHOLE FRAME SHALL BE SEALED AT EACH JOINT WITH BUTYL RUBBER (CONSEAL CS-102 OR EQUAL) AND GROUTED ON THE INSIDE.
4. UNLESS OTHERWISE NOTED, MANHOLE RISERS SHALL BE 48" MIN. INSIDE DIAMETER, PRECAST CONCRETE CONFORMING TO ASTM C478-94 FOR PRECAST REINFORCED MANHOLE SECTIONS.
5. ECCENTRIC CONE SHALL BE PRECAST CONCRETE CONFORMING TO ASTM C478-94 FOR PRECAST REINFORCED MANHOLE SECTIONS. STRAIGHT SIDE OF CONE SHALL BE POSITIONED OVER MANHOLE OUTLET. CONCENTRIC CONES MAY ONLY BE USED IN SPECIAL CASES WITH WRITTEN CONSENT OF ENGINEER.
6. JOINTS SHALL BE SET WITH PREFORMED MASTIC SEALANT (HENRY COMPANY RAM-NEK, KENT SEAL, OR EQUAL). INSIDE OF JOINTS SHALL BE GROUTED WITH NON-SHRINK GROUT.
7. PROVIDE WATER STOPS FOR ENCASED PIPE.
8. CONCRETE POUR SHALL NOT FALL OVER 6 FEET UNLESS AN "ELEPHANT'S TRUNK" OR AN "ADJUSTABLE PIPE" IS USED. CONCRETE WORK IN FLOW CHANNEL SHALL BE STEEL TROWEL FINISHED. SHELVES SHALL BE BROOM FINISHED. BASE SHALL BE MONOLITHICALLY PLACED. A STEEL IMPRESSION RING SHALL BE USED TO FORM GROOVE FOR FIRST RISER SECTION.
9. WHEN IN GROUNDWATER, PROVIDE 6" DEEP CRUSHED ROCK WRAPPED IN GEOTEXTILE BENEATH MANHOLE BASE. OTHERWISE, SCARIFY AND RECOMPACT NATIVE MATERIAL TO 90%.
10. PROVIDE 1/4" LIP AT NEW PAVEMENT AND NO LIP FOR EXISTING PAVEMENT.
11. ALL DIRECTION CHANGES TO BE SMOOTH WIDE SWEEPS.

STANDARD SEWER MANHOLE C200

NTS

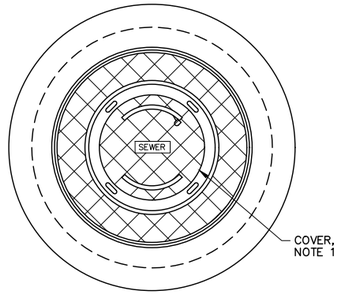

TOP PLAN
(AC PAVING NOT SHOWN)

ELEVATION

NOTES:

MANHOLE FRAME AND COVER SHALL HAVE 48" MIN CLEAR OPENING AND SEALED BLIND PICK HOLE. COVER SHALL BE LABELED "SEWER" AND SHALL BE RATTLE FREE WITHOUT USE OF SEALANT.

PRECAST MANHOLE SLAB TOP C201

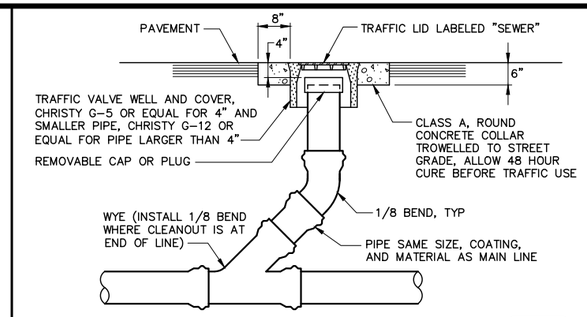

TRAFFIC AREA CLEANOUT C214

NTS

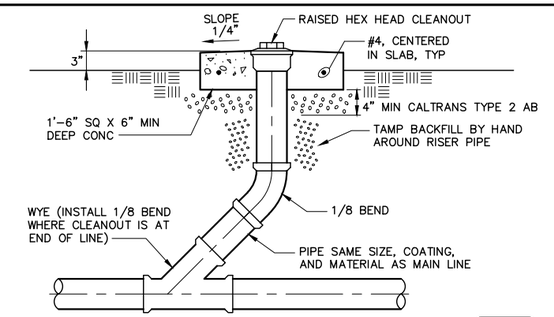

NON-TRAFFIC AREA CLEANOUT C216

NTS

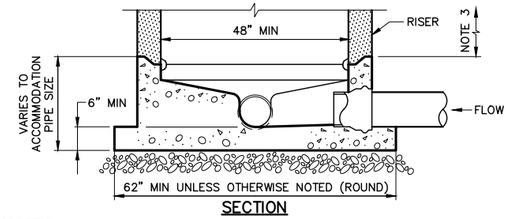

SECTION

NOTES:

1. MANHOLE BASE SHALL BE PLACED ON A MINIMUM 6" CLEAN SAND OR GRAVEL OVER NATIVE MATERIAL THAT IS UNDISTURBED OR COMPACTED TO 95%.
2. SEE DETAIL C200 FOR DETAILS AND NOTES OF CONSTRUCTION ABOVE PRECAST BASE.

PRECAST SEWER MANHOLE BASE C202

NTS

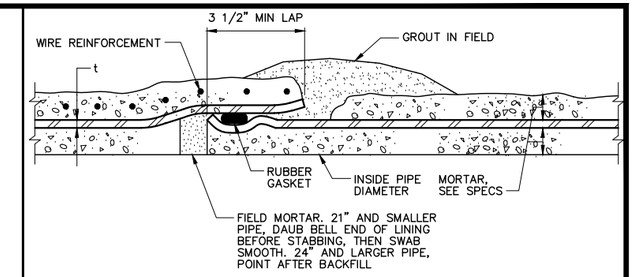

BELL AND SPIGOT RUBBER GASKET JOINT

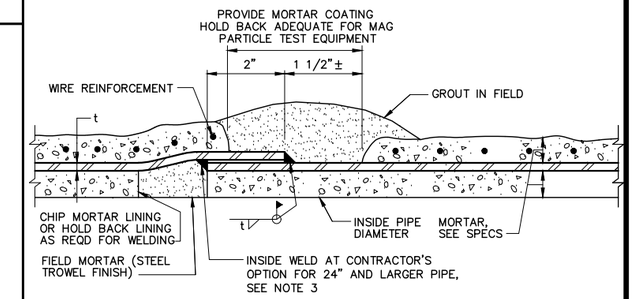

LAP WELDED SLIP JOINT

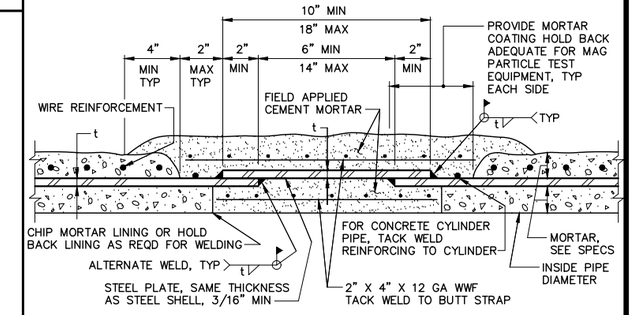

BUTT STRAP JOINT

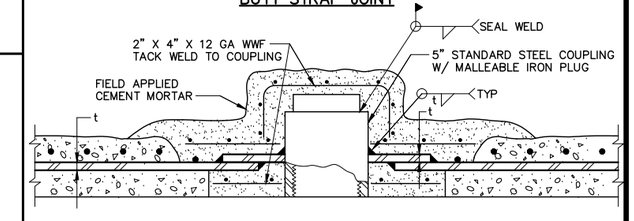

TYPICAL HANDHOLE FOR BUTT STRAP JOINT

NOTES:

1. HANDHOLE REQUIRED ON PIPE SMALLER THAN 24" DIAMETER.
2. PROVIDE ADEQUATE HOLDBACK OF CEMENT MORTAR LINING AND COATING FOR WELDING AND TESTING OF WELDS.
3. WHERE DOUBLE LAP WELD IS SHOWN ON THE DRAWINGS, WELD INSIDE AND OUTSIDE.
4. FIELD WELDS SHALL NOT BE MORTARED UNTIL APPROVED BY OWNER

MORTAR LINED & COATED STEEL PIPE C220

NTS

REGISTERED PROFESSIONAL ENGINEER — MARK W. TAKEMOTO — No. 64369 — Exp. 06-30-17 — CIVIL — STATE OF CALIFORNIA

0" 1" — VERIFY SCALES — BAR IS ONE INCH LONG ON FULL SIZE DRAWING. IF NOT ONE INCH LONG ON THIS DRAWING, ADJUST SCALES ACCORDINGLY

RMC water and environment

REV	DATE	BY	APVD	DESCRIPTION

DESIGNED	M. TAKEMOTO
DRAWN	C. TO
CHECKED	M. NAKAMOTO

SUBMITTED: MARK TAKEMOTO, RMC PROJECT ENGINEER CE-64369

APPROVED: STEVE CLARY, RMC ENGINEER CE-30318

SAUSALITO · MARIN CITY SANITARY DISTRICT

TREATMENT AND WET WEATHER FLOW UPGRADE

CIVIL STANDARD DETAILS - 3

DWG NO	C-4
SHEET NO	32 OF 226
PROJ NO	055-006
DATE	NOVEMBER 2016

FILENAME: 0055-006-C-2 11-11-16 10:14am CTo || XREFS: X-SMCSD-TBLK | MTakemoto-PE-stamp |<<--

Last Saved By: mtakemoto 3-14-16 10:00am

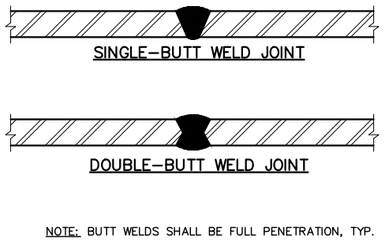

NOTE: BUTT WELDS SHALL BE FULL PENETRATION, TYP.

WELDED STEEL PIPE BUTT WELDS C222
NTS

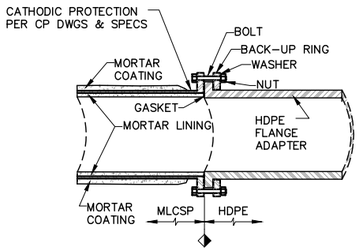

NOTES:
1. CONTRACTOR SHALL ENSURE FLANGE BOLT HOLE PATTERN FOR HDPE AND MLCSP MATCH UP.
2. SEE HDPE SPEC FOR MORE INFORMATION.

STEEL PIPE TO HDPE TRANSITION C231
NTS

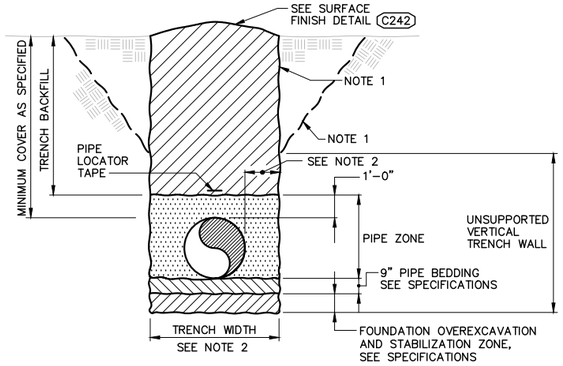

NOTES:
1. ALTERNATE TRENCH SECTIONS SHOWN ARE FOR USE WHERE COMPACT, STABLE SOIL CONDITIONS EXIST. WHERE LARGE ROCKS OR STRUCTURES ARE ENCOUNTERED, TRENCH SECTIONS MAY BE DEEPER AND WIDER THAN THOSE SHOWN. COMBINATION OF SLOPING AND VERTICAL TRENCH WALLS:
   a. TRENCH DEPTHS NOT EXCEEDING 5'–0" SHALL HAVE VERTICAL WALLS IN PIPE ZONE UNLESS NOTED OTHERWISE.
   b. FOR TRENCH DEPTHS EXCEEDING 5'–0" SEE SPECIFICATION 2200.
2. TRENCH WIDTH SHALL BE A MINIMUM OF THE PIPE OD PLUS 24". THE MAXIMUM SHALL BE THE PIPE OD PLUS 36".
3. WHERE WET AND UNSTABLE SOIL IS ENCOUNTERED, SOLID SHEATHING IS REQUIRED FOR ALL VERTICAL TRENCH WALLS.
4. SEE SPECIFICATION 02200 FOR BACKFILL REQUIREMENTS.

PIPE TRENCH SECTION C240
NTS

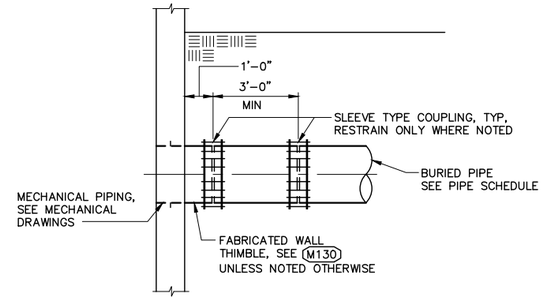

WELDED OR FUSED PIPE

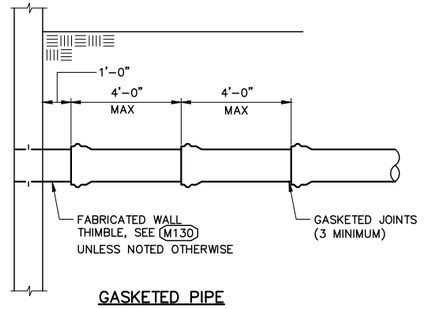

GASKETED PIPE

BURIED PIPE AT STRUCTURE C234
NTS

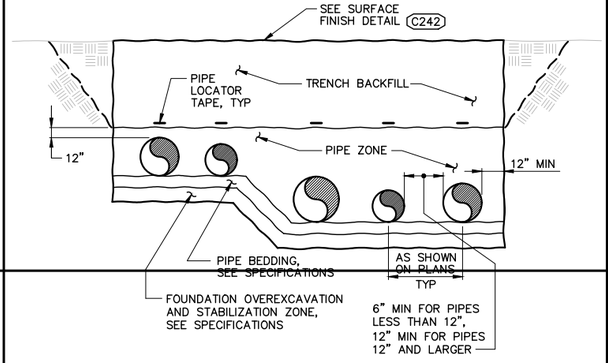

NOTES:
1. PIPES LOCATED WITHIN MULTIPLE PIPE TRENCHES SHALL BE DESIGNED FOR POSITIVE PROJECTING EMBANKMENT CONDITION. SEE SPECS.
2. DESIGN OF PIPE SHALL BE CARRIED OUT FOR EACH INSTANCE OF MULTIPLE PIPE TRENCHES, ACCOUNTING FOR THE GEOMETRY OF THE PIPE TRENCH.

MULTIPLE PIPE TRENCH SECTION C244
NTS

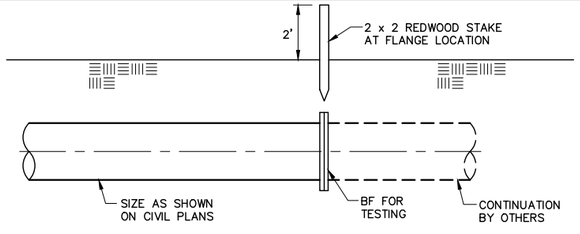

NOTES:
1. CONTRACTOR SHALL PROVIDE SUFFICIENT TEMPORARY THRUST RESTRAINT FOR TESTING.

TYPICAL PIPE END OF CONTRACT DETAIL C238
NTS

REGISTERED PROFESSIONAL ENGINEER MARK W. TAKEMOTO No. 64369 Exp. 06–30–17 CIVIL STATE OF CALIFORNIA

0" 1" — VERIFY SCALES — BAR IS ONE INCH LONG ON FULL SIZE DRAWING. IF NOT ONE INCH LONG ON THIS DRAWING, ADJUST SCALES ACCORDINGLY

RMC water and environment

REV	DATE	BY	APVD	DESCRIPTION

DESIGNED	M. TAKEMOTO
DRAWN	C. TO
CHECKED	M. NAKAMOTO

SUBMITTED: MARK TAKEMOTO, RMC PROJECT ENGINEER CE-64369
APPROVED: STEVE CLARY, RMC ENGINEER CE-30318

SAUSALITO · MARIN CITY SANITARY DISTRICT

TREATMENT AND WET WEATHER FLOW UPGRADE

CIVIL STANDARD DETAILS - 4

DWG NO	C-5
SHEET NO	33 OF 226
PROJ NO	055-006
DATE	NOVEMBER 2016

FILENAME: 0055-006-C-2 11-11-16 10:14am CTo || XREFS:| X-SMCSD-TBLK | MTakemoto-PE-stamp |<<--

Last Saved By: mtakemoto 3-14-16 10:00am

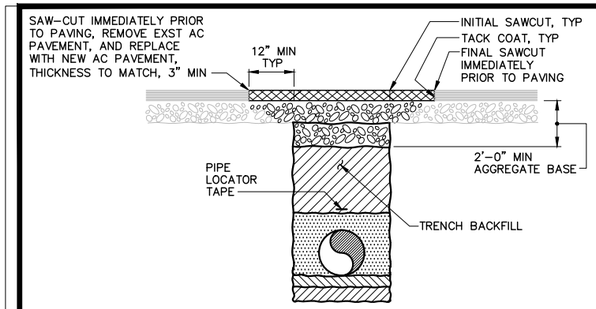

EXISTING AC PAVEMENT

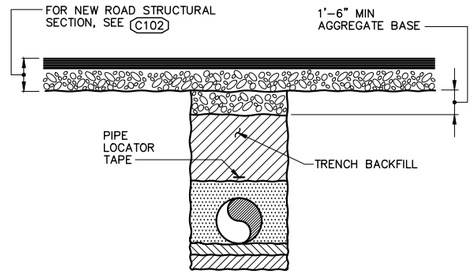

NEW AC PAVEMENT

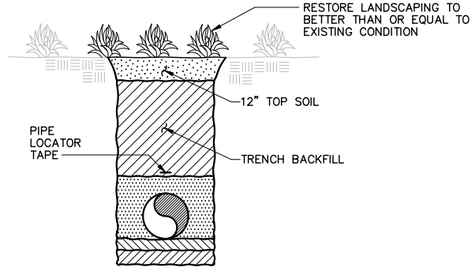

LANDSCAPED AREAS

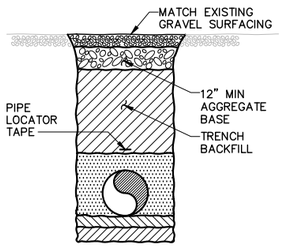

GRAVELLED AREAS

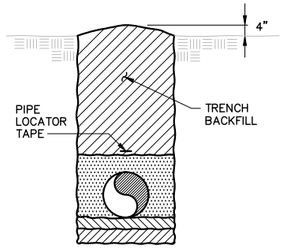

UNSURFACED AREAS

NOTES:

1. VERTICAL WALL TRENCH IS SHOWN. COMBINED SLOPING AND VERTICAL WALL TRENCH IS SIMILAR. ADJUST SURFACE WIDTHS AND SAW-CUT LINES FROM EDGE OF SLOPING WALLS.
2. SEE SPECIFICATIONS FOR BACKFILL MATERIAL AND COMPACTION REQUIREMENTS.
3. PIPE LOCATOR TAPE OR TRACING WIRE SHALL BE BROUGHT TO SURFACE AT STRUCTURE CONNECTIONS. PRECAST CONCRETE HANDHOLE SHALL BE PROVIDED TO TERMINATE LOCATOR TAPE OR TRACING WIRE.

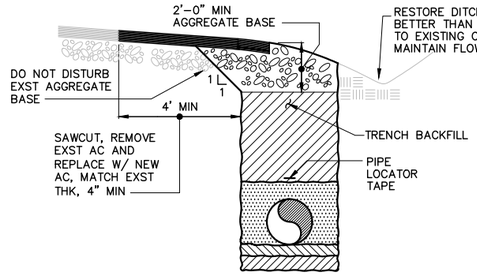

EXISTING ADJACENT ROADWAY

TRENCH SURFACE FINISH C242

NTS

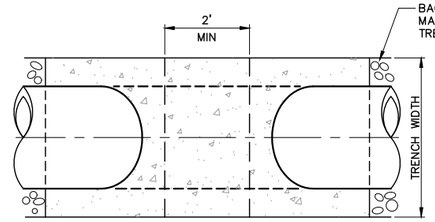

PLAN

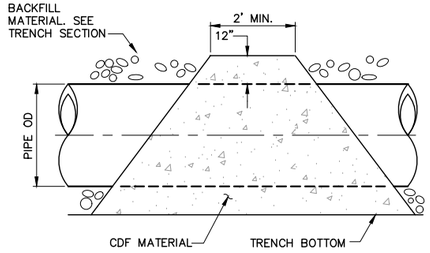

SECTION

TRENCH PLUG C246

NTS

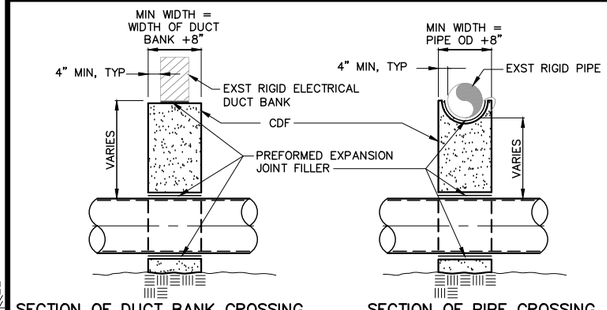

SECTION OF DUCT BANK CROSSING

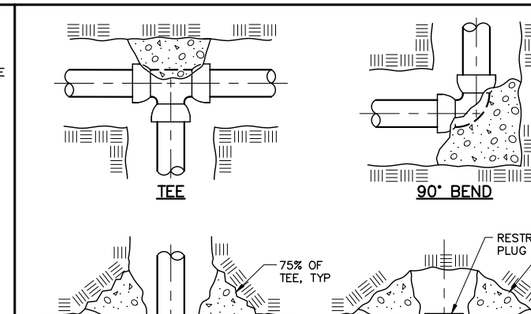

SECTION OF PIPE CROSSING

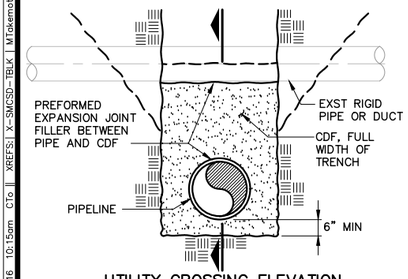

UTILITY CROSSING ELEVATION

NOTES:

1. SUBMIT SHOP DRAWING ON EXPANSION JOINT FILLER MATERIAL.
2. BACKFILL TO BE BROUGHT UP UNIFORMLY ON BOTH SIDES OF UTILITY SUPPORT.
3. EXISTING PIPE OR DUCT SHALL BE FIRMLY SUPPORTED DURING INSTALLATION OF NEW PIPE AND UTILITY SUPPORT.
4. FORM THE SIDES OF UTILITY SUPPORT WHICH CROSS TRENCH.
5. RIGID PIPE SHALL BE DEFINED AS CONCRETE PIPE OR OTHER RIGID MATERIAL.

UNDERGROUND UTILITY SUPPORT DETAILS C248

NTS

TEE

90° BEND

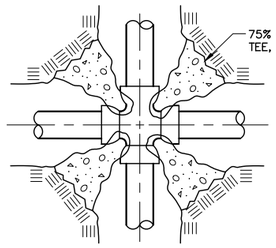

CROSS

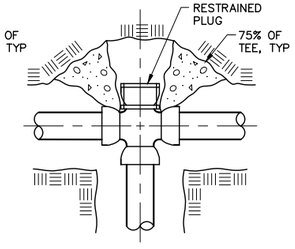

CROSS PLUGGED

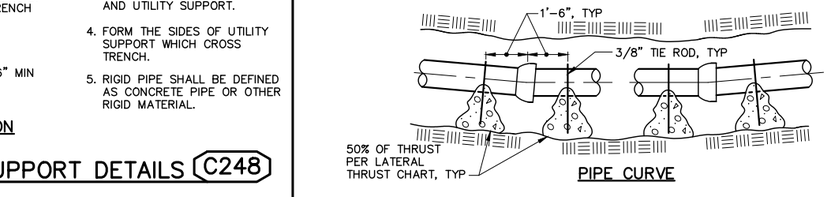

PIPE CURVE

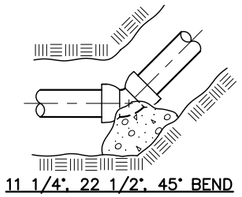

11 1/4°, 22 1/2°, 45° BEND

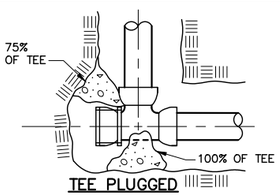

TEE PLUGGED

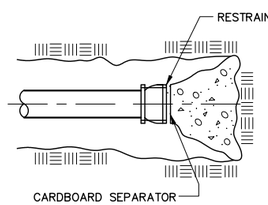

DEAD END

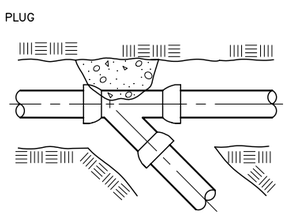

LATERAL

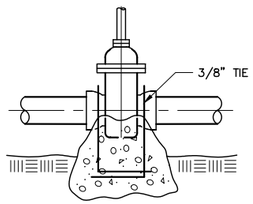

VALVE (ELEVATION)

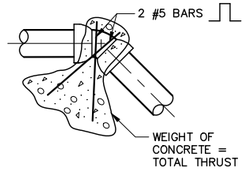

BEND (ELEVATION)

THRUST PER PSI OF HYDROTEST PRESSURE						
PIPE SIZE	90° ELBOW	45° ELBOW	22 1/2° ELBOW	11 1/4° ELBOW	TEE OR DEAD END	LATERAL
4"	28	16	8	6	20	16
6"	56	30	16	10	40	30
8"	96	52	26	14	68	52
10"	154	84	44	22	110	84
12"	220	120	62	32	156	120
14"	298	162	82	42	210	162
16"	384	210	106	54	272	210
18	494	270	138	70	352	270
20	612	334	170	86	434	334
24	878	478	244	122	624	478

EXAMPLE:

12" 45° ELBOW AT 150 PSIG TEST PRESSURE
150 (PSIG) X 120 (FROM CHART) = 18,000 POUNDS
SEE SOILS REPORT FOR SOIL BEARING STRENGTH
(2000 PSF USED FOR EXAMPLE)
18,000\2000 = 9 SQ FT THRUST BLOCK BEARING AREA REQUIRED

LATERAL THRUST PER PSI PER DEGREE OF DEFLECTION			
PIPE SIZE		PIPE SIZE	
4"	.36	14"	3.80
6"	.72	16"	4.86
8"	1.22	18	6.68
10"	1.98	20	7.92
12"	2.78	24	11.50

NOTES:

1. THRUST BLOCKS NOT REQUIRED FOR SOLVENT WELDED PVC PIPE OR PIPE WITH RESTRAINED JOINT TYPE FITTINGS.
2. POUR THRUST BLOCKS AGAINST UNDISTURBED EARTH. LOOSE OR OTHERWISE DISTURBED EARTH IS UNACCEPTABLE FOR THRUST BLOCK FOUNDATION.
3. USE CLASS A CONCRETE FOR THRUST BLOCKS.
4. THRUST BLOCK FOUNDATION SOILS SHALL HAVE A MINIMUM UNCONFINED COMPRESSIVE STRENGTH OF 1,200 PSF AS MEASURED BY ENGINEER WITH POCKET PENETROMETER, OR EQUAL.

CONCRETE THRUST BLOCKS C250

NTS

REGISTERED PROFESSIONAL ENGINEER — MARK W. TAKEMOTO — No. 64369 — Exp. 06-30-17 — CIVIL — STATE OF CALIFORNIA

0" 1" — VERIFY SCALES — BAR IS ONE INCH LONG ON FULL SIZE DRAWING. IF NOT ONE INCH LONG ON THIS DRAWING, ADJUST SCALES ACCORDINGLY

RMC water and environment

REV	DATE	BY	APVD	DESCRIPTION

DESIGNED M. TAKEMOTO
DRAWN C. TO
CHECKED M. NAKAMOTO

SUBMITTED: MARK TAKEMOTO, RMC PROJECT ENGINEER CE-64369
APPROVED: STEVE CLARY, RMC ENGINEER CE-30318

SAUSALITO · MARIN CITY SANITARY DISTRICT

TREATMENT AND WET WEATHER FLOW UPGRADE

CIVIL STANDARD DETAILS - 5

DWG NO C-6
SHEET NO 34 OF 226
PROJ NO 055-006
DATE NOVEMBER 2016

FILENAME: 0055-006-C-2 11-11-16 10:15am CTo || XREFS:| X-SMCSD-TBLK | M:\takemoto-PE-stamp |<<--

Last Saved By: mtakemoto 3-14-16 10:00am

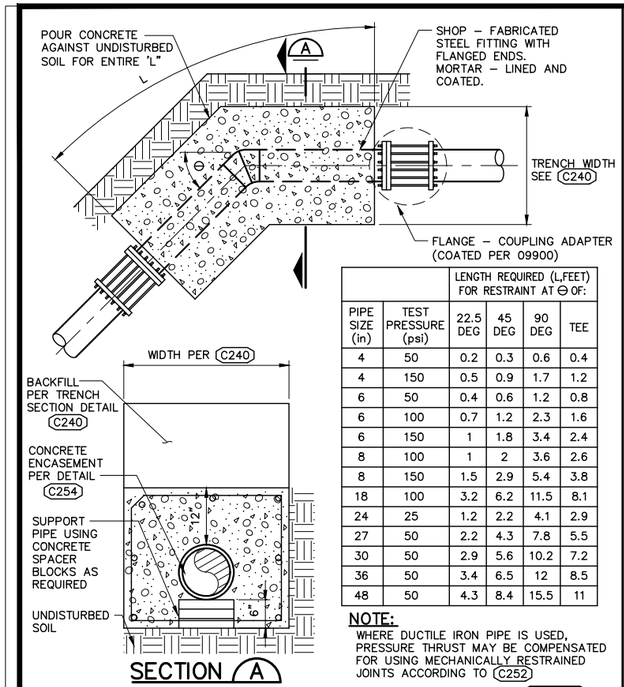

		LENGTH REQUIRED (L,FEET) FOR RESTRAINT AT Θ OF:			
PIPE SIZE (in)	TEST PRESSURE (psi)	22.5 DEG	45 DEG	90 DEG	TEE
4	50	0.2	0.3	0.6	0.4
4	150	0.5	0.9	1.7	1.2
6	50	0.4	0.6	1.2	0.8
6	100	0.7	1.2	2.3	1.6
6	150	1	1.8	3.4	2.4
8	100	1	2	3.6	2.6
8	150	1.5	2.9	5.4	3.8
18	100	3.2	6.2	11.5	8.1
24	25	1.2	2.2	4.1	2.9
27	50	2.2	4.3	7.8	5.5
30	50	2.9	5.6	10.2	7.2
36	50	3.4	6.5	12	8.5
48	50	4.3	8.4	15.5	11

NOTE:
WHERE DUCTILE IRON PIPE IS USED, PRESSURE THRUST MAY BE COMPENSATED FOR USING MECHANICALLY RESTRAINED JOINTS ACCORDING TO C252

ANCHOR THRUST DETAIL C251
NTS

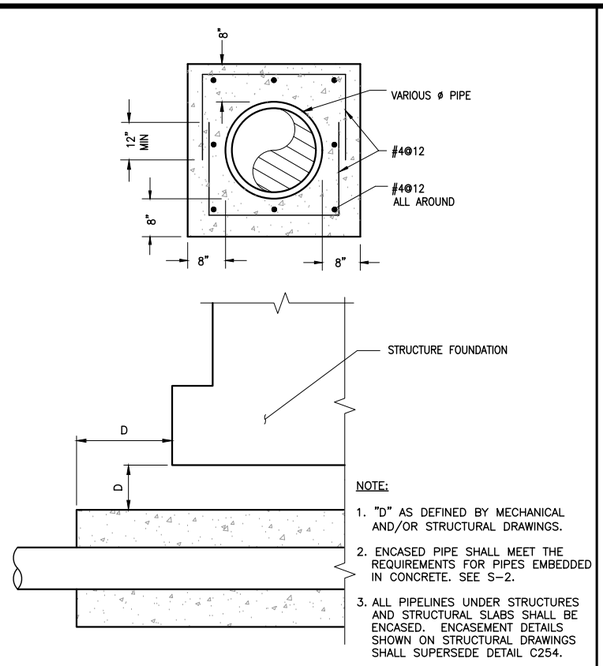

NOTE:
1. "D" AS DEFINED BY MECHANICAL AND/OR STRUCTURAL DRAWINGS.
2. ENCASED PIPE SHALL MEET THE REQUIREMENTS FOR PIPES EMBEDDED IN CONCRETE. SEE S–2.
3. ALL PIPELINES UNDER STRUCTURES AND STRUCTURAL SLABS SHALL BE ENCASED. ENCASEMENT DETAILS SHOWN ON STRUCTURAL DRAWINGS SHALL SUPERSEDE DETAIL C254.

CONCRETE ENCASEMENT C254
NTS

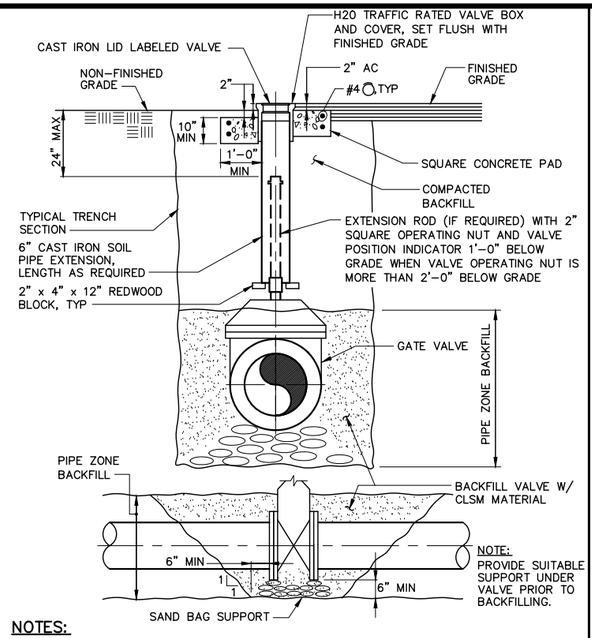

NOTES:
1. CONTRACTOR SHALL PROVIDE A "KEY" OF SUITABLE LENGTH TO CONNECT TO VALVE. FOR ALL OTHER VALVES A RISER SHALL BE PROVIDED.

BURIED GATE VALVE C285
NTS

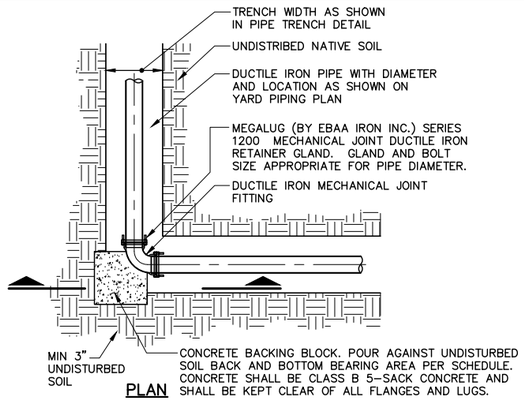

PLAN

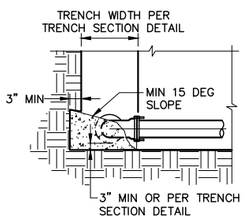

SECTION

REQUIRED BEARING AREA (SF)			
PIPE SIZE	TEE	90	45
6	5	6	4
8	8	11	7
10	11	15	10
12	17	24	16
14	22	31	23
16	30	42	30
18	39	54	35

NOTES:
1. BEARING AREA IS BASED ON PRESSURE OF 150 PSI WITH A SOIL BEARING CAPACITY OF 1000 PSF. OTHER CONDITIONS SHALL BE MODIFIED TO HANDLE THE ASSOCIATED THRUST AND SUBMITTED TO THE ENGINEER FOR APPROVAL.

ALTERNATIVE DUCTILE IRON PIPE THRUST RESTRAINT C252
NTS

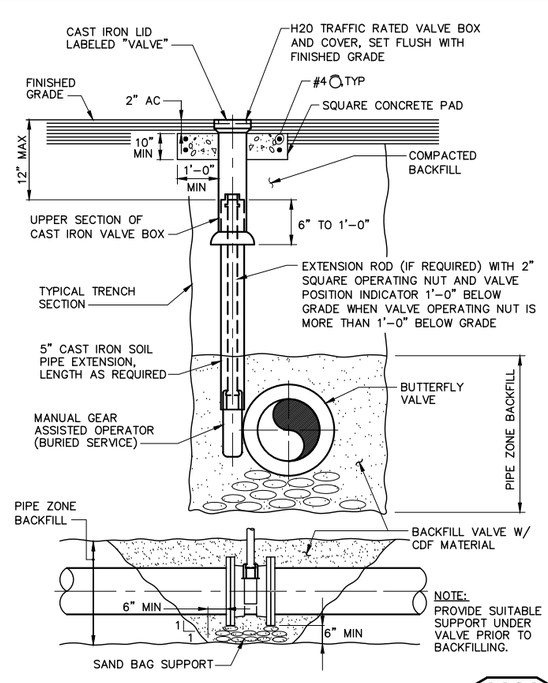

BURIED BUTTERFLY OR PLUG VALVE BOX C282
NTS

REGISTERED PROFESSIONAL ENGINEER
MARK W. TAKEMOTO
No. 64369
Exp. 06–30–17
CIVIL
STATE OF CALIFORNIA

0" 1"
— VERIFY SCALES —
BAR IS ONE INCH LONG ON FULL SIZE DRAWING. IF NOT ONE INCH LONG ON THIS DRAWING, ADJUST SCALES ACCORDINGLY

REV	DATE	BY	APVD	DESCRIPTION

DESIGNED M. TAKEMOTO
DRAWN C. TO
CHECKED M. NAKAMOTO

SUBMITTED: MARK TAKEMOTO, RMC PROJECT ENGINEER CE-64369
APPROVED: STEVE CLARY, RMC ENGINEER CE-30318

TREATMENT AND WET WEATHER FLOW UPGRADE

CIVIL STANDARD DETAILS - 6

DWG NO C-7
SHEET NO 35 OF 226
PROJ NO 055-006
DATE NOVEMBER 2016

FILENAME: 0055-006-C-2 11-11-16 10:15am CTo | XREFS: | X-SMCSD-TBLK | MTakemoto-PE-stamp |<<--

Last Saved By: mtakemoto 3-14-16 10:00am

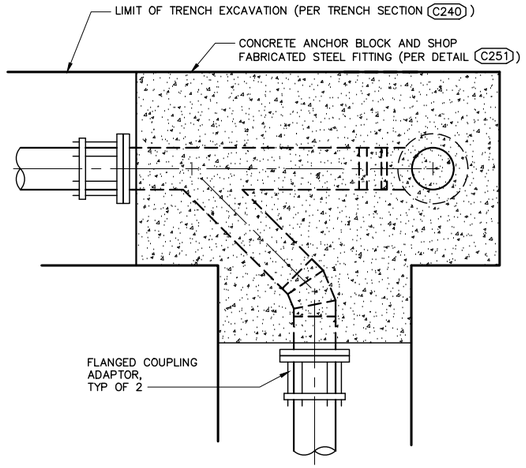

PLAN

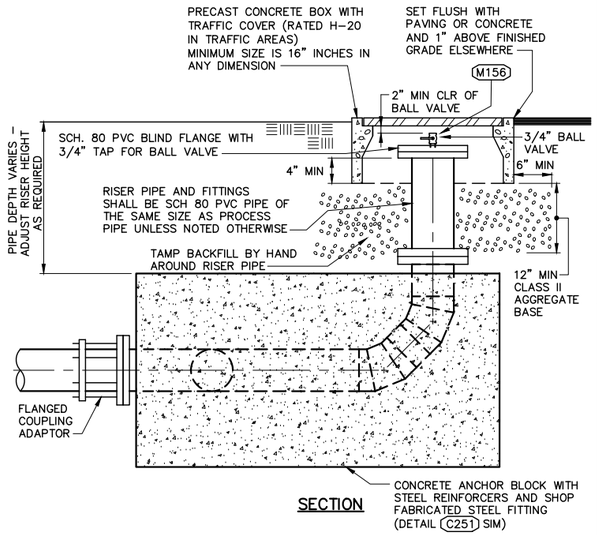

SECTION

SLUDGE PIPE AIR RELEASE/CLEANOUT C301

NTS

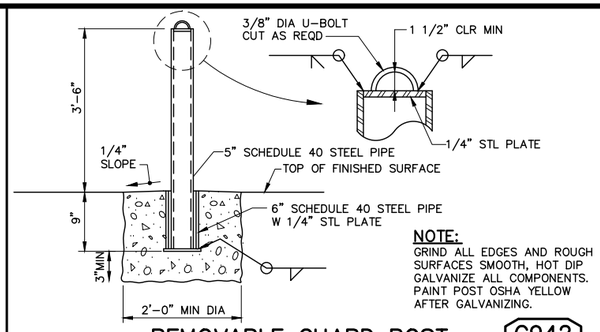

NOTE:
GRIND ALL EDGES AND ROUGH SURFACES SMOOTH, HOT DIP GALVANIZE ALL COMPONENTS. PAINT POST OSHA YELLOW AFTER GALVANIZING.

REMOVABLE GUARD POST C942

NTS

SITUATION: LOCATION OF NEW RECYCLED WATER AND SEWER LINES TO EXISTING DOMESTIC WATER LINES.

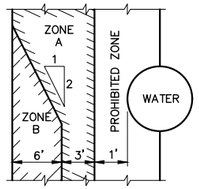

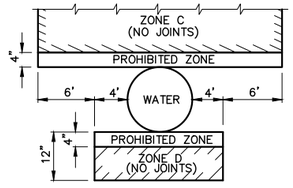

PARALLEL CONSTRUCTION

PERPENDICULAR CROSSING

IF ANY RECYCLED WATER OR SEWER PIPELINES ARE TO BE CONSTRUCTED WITHIN ANY OF THE ABOVE INDICATED ZONES, SPECIAL CONSTRUCTION SHALL BE REQUIRED AS DESCRIBED BELOW.

ZONE	RECYCLED WATER
A	DO NOT LOCATE ANY PARALLEL RECYCLED WATER OR SEWER LINES IN THIS AREA WITHOUT STATE AND LOCAL HEALTH DEPARTMENT APPROVAL.
B	USE CLASS 200 DIP, CLASS 200 PVC – AWWA C900, WELDED STEEL, HDPE OR FUSED PVC PIPE
C	USE CLASS 200 DIP, CLASS 200 PVC – AWWA C900 OR WELDED STEEL, , HDPE OR FUSED PVC PIPE
D	USE CLASS 200 DIP OR CLASS 200 PVC – AWWA C900 OR WELDED STEEL, HDPE OR FUSED PVC PIPE

BASIC SEPARATION STANDARDS

1. PARALLEL CONSTRUCTION: THE HORIZONTAL DISTANCE BETWEEN PRESSURE DOMESTIC WATER AND RECYCLED WATER MAINS AND SEWER LINE SHALL BE AS SHOWN.
2. PERPENDICULAR CONSTRUCTION (CROSSING): PRESSURE WATER MAINS SHALL BE AT LEAST ONE FOOT ABOVE SANITARY SEWER AND RECYCLED WATER LINES WHERE THESE LINES MUST CROSS.
3. SPECIAL PROVISIONS: ALTERNATIVE CONSTRUCTION CRITERIA WHERE THE BASIC SEPARATION STANDARDS CANNOT BE ATTAINED ARE SHOWN ABOVE.

GENERAL NOTES

1. NO PIPE JOINTS SHALL BE PERMITTED WITHIN ZONE D. IT IS THE INTENT OF THESE SPECIFICATIONS THAT NO JOINTS SHALL OCCUR WITHIN ZONE C. IF THAT CANNOT BE ACCOMPLISHED, THE NEW PIPELINE SHALL BE ENCASED IN CONCRETE FOR THE FULL LENGTH OF ZONE C.
2. ALL DIP MUST HAVE HOT DIP BITUMINOUS COATING AND ALL PVC SHALL BE CLASS 200 PER AWWA C900 OR EQUIVALENT.
3. SEWER FORCE MAINS SHALL NOT BE PERMITTED IN ZONES A THROUGH D.
4. THIS CRITERIA DOES NOT APPLY FOR A RECYCLED WATER LINE CROSSING ANOTHER RECYCLED WATER LINE.
5. THE CONSTRUCTION CRITERIA APPLIES TO HOUSE LATERALS THAT CROSS ABOVE A PRESSURE WATER MAIN BUT NOT TO THOSE HOUSE LATERALS THAT CROSS BELOW A PRESSURE WATER MAIN.

STANDARD CLEARANCES TO SEWERS AND DOMESTIC WATER MAINS C384

NTS

REGISTERED PROFESSIONAL ENGINEER MARK W. TAKEMOTO No. 64369 Exp. 06-30-17 CIVIL STATE OF CALIFORNIA

0" 1" — VERIFY SCALES — BAR IS ONE INCH LONG ON FULL SIZE DRAWING. IF NOT ONE INCH LONG ON THIS DRAWING, ADJUST SCALES ACCORDINGLY

RMC water and environment

REV	DATE	BY	APVD	DESCRIPTION
1				
2				
3				
4				
5				

DESIGNED M. TAKEMOTO
DRAWN C. TO
CHECKED M. NAKAMOTO

SUBMITTED: MARK TAKEMOTO, RMC PROJECT ENGINEER CE-64369
APPROVED: STEVE CLARY, RMC ENGINEER CE-30318

SAUSALITO · MARIN CITY SANITARY DISTRICT

TREATMENT AND WET WEATHER FLOW UPGRADE

CIVIL STANDARD DETAILS - 7

DWG NO C-8
SHEET NO 36 OF 226
PROJ NO 055-006
DATE NOVEMBER 2016

FILENAME: 0055-006-C-2 11-11-16 10:15am CTo | XREFS: | X-SMCSD-TBLK | Mtakemoto-PE-stamp |<<--

Last Saved By: mtakemoto 3-14-16 10:00am

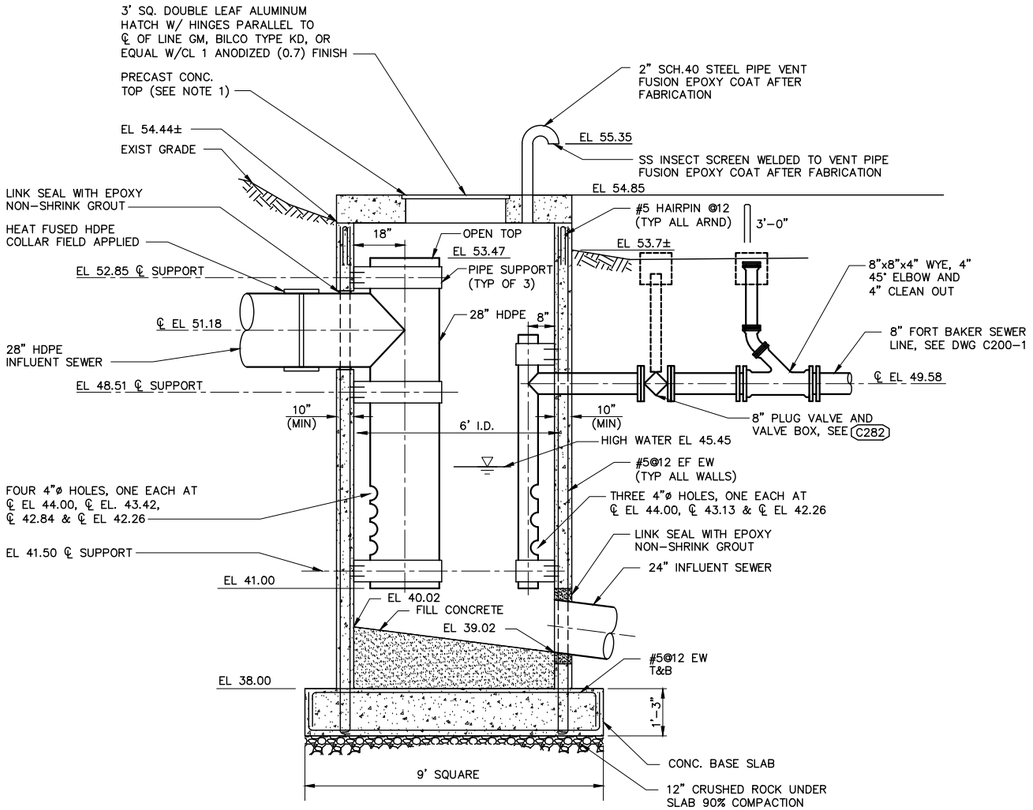

NOTES:

1. PROVIDE PVC LINER INSIDE MANHOLE, UNDERSIDE OF TOP AND INSIDE HATCH OPENING, PER SECTION 06620, SEAL JOINTS IN FIELD. PRECAST LID SHALL BE POSITIVELY ATTACHED TO CAST-IN-PLACE WALLS. USE OF SELF WEIGHT ONLY IS NOT PERMISSIBLE. CONTRACTOR SHALL COORDINATE WITH PRECAST SUPPLIER PRIOR TO PLACING WALLS.
2. PIPES ARE SHOWN ROTATED INTO SECTION VIEW FOR CLARITY. SEE PLAN VIEW FOR PROPER ORDINATION.

ENERGY DISSIPATION STRUCTURE DETAIL 1

NTS C200-1

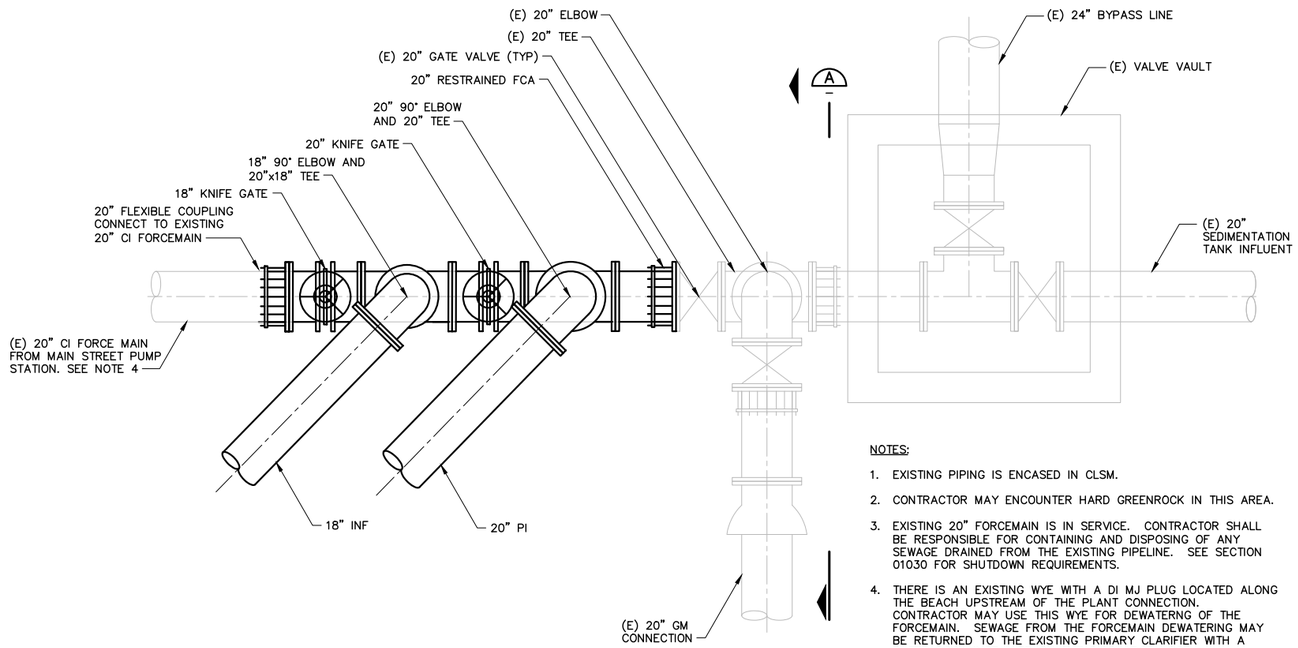

NOTES:

1. EXISTING PIPING IS ENCASED IN CLSM.
2. CONTRACTOR MAY ENCOUNTER HARD GREENROCK IN THIS AREA.
3. EXISTING 20" FORCEMAIN IS IN SERVICE. CONTRACTOR SHALL BE RESPONSIBLE FOR CONTAINING AND DISPOSING OF ANY SEWAGE DRAINED FROM THE EXISTING PIPELINE. SEE SECTION 01030 FOR SHUTDOWN REQUIREMENTS.
4. THERE IS AN EXISTING WYE WITH A DI MJ PLUG LOCATED ALONG THE BEACH UPSTREAM OF THE PLANT CONNECTION. CONTRACTOR MAY USE THIS WYE FOR DEWATERNG OF THE FORCEMAIN. SEWAGE FROM THE FORCEMAIN DEWATERING MAY BE RETURNED TO THE EXISTING PRIMARY CLARIFIER WITH A FILTER SOCK INSTALLED ON THE DISCHARGE HOSE.

NEW PRIMARY INFLUENT CONNECTION AT EXISTING PRIMARY CLARIFIER DETAIL 2

NTS C200-1

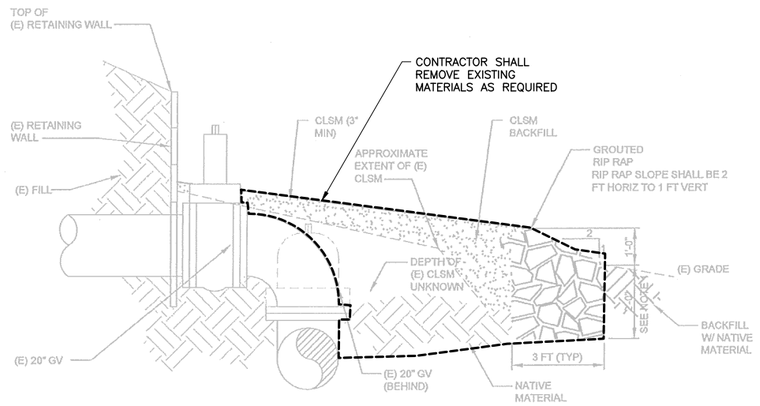

SECTION A

NTS

FILENAME: 0055-006-C-9 11-11-16 10:15am CTo | XREFS: X-SMCSD-TBLK | MTakemoto-PE-stamp |<c--

Last Saved By: mtakemoto 10-24-16 08:48am

REGISTERED PROFESSIONAL ENGINEER — MARK W. TAKEMOTO — No. 64369 — Exp. 06-30-17 — CIVIL — STATE OF CALIFORNIA

0" 1" — VERIFY SCALES — BAR IS ONE INCH LONG ON FULL SIZE DRAWING. IF NOT ONE INCH LONG ON THIS DRAWING, ADJUST SCALES ACCORDINGLY

RMC water and environment

REV	DATE	BY	APVD	DESCRIPTION

DESIGNED	M. TAKEMOTO
DRAWN	C. TO
CHECKED	M. NAKAMOTO

SUBMITTED: MARK TAKEMOTO, RMC PROJECT ENGINEER CE-64369

APPROVED: STEVE CLARY, RMC ENGINEER CE-30318

SAUSALITO · MARIN CITY SANITARY DISTRICT

TREATMENT AND WET WEATHER FLOW UPGRADE

CIVIL MISCELLANEOUS DETAILS

DWG NO	C-9
SHEET NO	37 OF 226
PROJ NO	055-006
DATE	NOVEMBER 2016

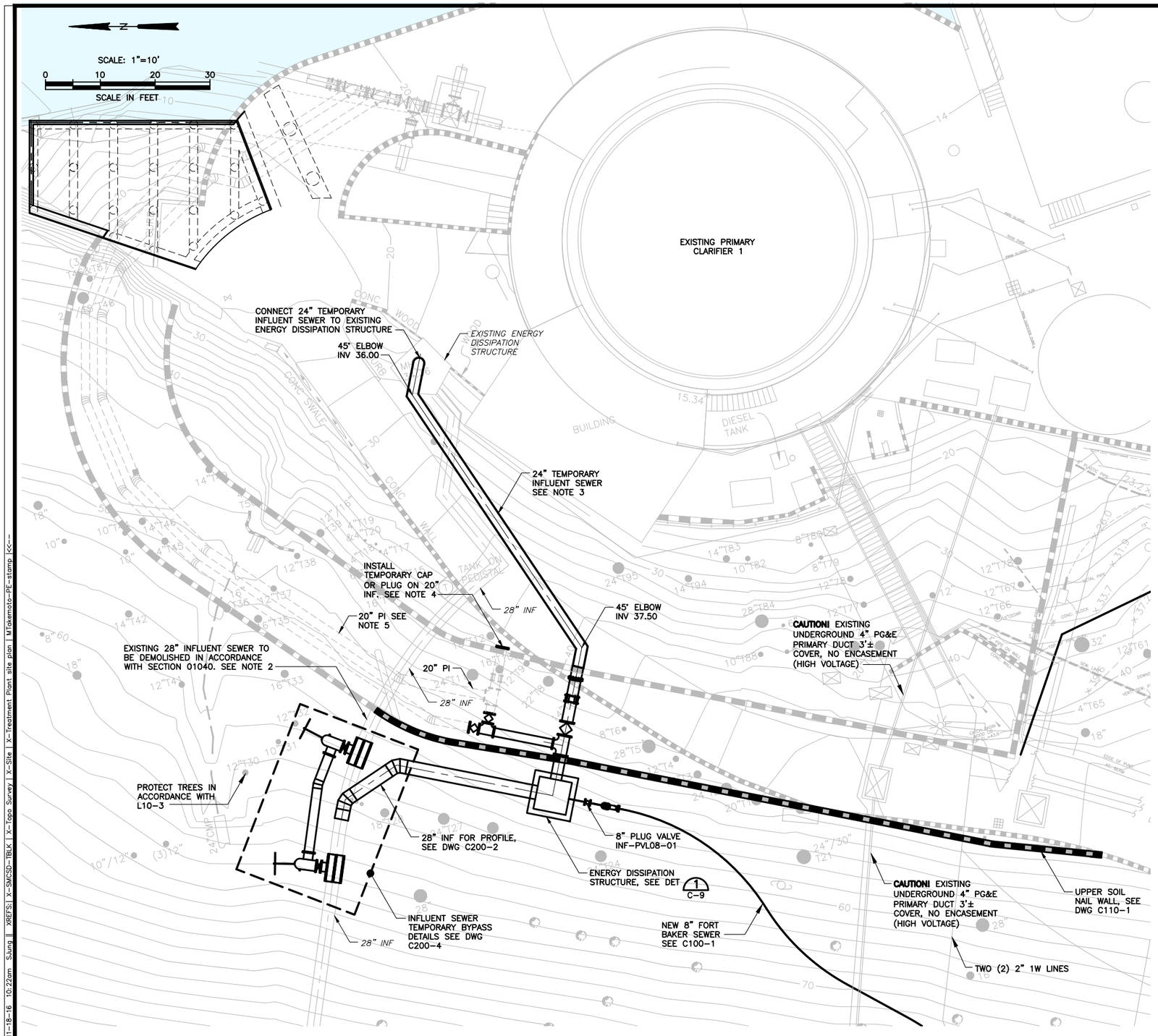

TEMPORARY INFLUENT SEWER PLAN

1" = 10'

NOTES:

1. LOCATION OF EXISTING UTILITIES SHOWN IS APPROXIMATE. NOT ALL UTILITIES MAY BE SHOWN. CONTRACTOR SHALL VERIFY UTILITY LOCATION AND SERVICE IN THE FIELD PRIOR TO DEMOLITION.
2. THE 24" TEMPORARY INFLUENT SEWER LINE SHALL BE PLACED INTO SERVICE PRIOR TO DEMOTION OF THE EXISTING 28" INFLUENT SEWER.
3. CONTRACTOR USE TEMPORARY SUPPORTS AND/OR RESTRAINTS AS NEEDED TO SUPPORT THE 24" TEMPORARY INFLUENT SEWER. CONTRACTOR SHALL MAINTAIN VEHICLE ACCESS TO THE TREATMENT PLANT PROCESS AREA AS REQUIRED IN SECTION 01040. CONTRACTOR SHALL PROTECT THE 24" TEMPORARY INFLUENT SEWER WITH TRENCH PLATES OR OTHER METHODS TO ALLOW FOR VEHICLE TRAFFIC.
4. THE TEMPORARY CAP OR PLUG SHALL REMAIN IN PLACE UNTIL THE PERMANENT 24" INFLUENT SEWER CONNECTION TO THE NEW HEADWORKS IS COMPLETE AND PLACED INTO SERVICE.
5. THE CONTRACTOR MAY USE THE NEW 20" INF LINE AS A TEMPORARY INFLUENT SEWER BYPASS LINE AFTER CONSTRUCTION OF THE NEW 20" INF HAS BEEN COMPLETED.
6. TYPICAL DRY WEATHER FLOW THROUGH THE 28" INF LINE RANGES FROM 0.5 MGD TO 2.0 MGD.
7. TYPICAL DRY WEATHER FLOW THROUGH THE 8" FT BAKER INFLUENT SEWER LINE RANGES FROM 0.05 MGD TO 0.02 MGD.

REGISTERED PROFESSIONAL ENGINEER — MARK W. TAKEMOTO — No. 64369 — Exp. 06-30-17 — CIVIL — STATE OF CALIFORNIA

0" 1" — VERIFY SCALES — BAR IS ONE INCH LONG ON FULL SIZE DRAWING. IF NOT ONE INCH LONG ON THIS DRAWING, ADJUST SCALES ACCORDINGLY

RMC water and environment

REV	DATE	BY	APVD	DESCRIPTION

DESIGNED M. TAKEMOTO
DRAWN C. TO
CHECKED M. NAKAMOTO

SUBMITTED: MARK TAKEMOTO, RMC PROJECT ENGINEER CE-64369
APPROVED: STEVE CLARY, RMC ENGINEER CE-30318

SAUSALITO · MARIN CITY SANITARY DISTRICT

TREATMENT AND WET WEATHER FLOW UPGRADE

TEMPORARY INFLUENT SEWER PLAN

DWG NO C20
SHEET NO 38 OF 226
PROJ NO 055-006
DATE NOVEMBER 2016

FILENAME: 0055-006-C20 11-18-16 10:22am SJung | XREFS: X-SMCSD-TBLK | X-Topo Survey | X-Site | X-Treatment Plant site plan | MTakemoto-PE-stamp |<<--

Last Saved By: SJung 10-24-16 08:49am

TEMPORARY PROCESS PIPELINES TO BE FIELD ROUTED AND PROVIDED BY CONTRACTOR

U1. 28" INF (FROM MAIN ST. PS). SEE C200-1.
U2. 8" SS (PERMANENT LINE FROM FT. BAKER). NOT SHOWN. SEE C100-1.
U3. 4" SEWER (FROM OFFICE)
U4. FC TANK, METERING PUMP
U5. 1/2" FC IN 3" CONTAINMENT PIPE (FROM CHEMICAL PULLBOX TO FC TANK ON TO DIGESTER)
U6. 2" 1W
U7. 4" R (FROM RETURN PS)
U8. TWO (2) 3" DG (TO/FROM SECONDARY DIGESTER)
U9. 6" SD
U10. 12" SE (FROM EFFLUENT FILTER CHANNEL CHLORINE CONTACT TANK INLET)
U11. 4" 3W
U12. 12" SD
U13. HILLSIDE STORM WATER RUN OFF TO BAY (CONTRACTOR TO PROVIDE MIN. 24" DIA. PIPE)
U14. 4" PUMPED DRAIN (FROM SUMP PUMP)

TEMPORARY FACILITIES TO BE PROVIDED BY THE CONTRACTOR

F1. PLANT POWER (SEE E100-2)
F2. SECONDARY FILTRATION
F3. DIESEL FUEL STORAGE
F4. POLYMER STORAGE
F5. DEWATERED SLUDGE TRANSFER

NOTES:

1. ADDITIONAL TEMPORARY UTILITIES/FACILITIES DETAILS AND REQUIREMENTS ARE LISTED IN SECTION 01040.
2. CONTRACTOR SHALL FIELD VERIFY EXISTING UTILITIES AND PROCESS PIPING LOCATIONS AND CONNECTION REQUIREMENTS. SEE D-2 FOR UTILITY DEMOLITION REQUIREMENTS.
3. THE BEGINNING LOCATION FOR EACH TEMPORARY UTILITY IS MARKED WITH AN "A" AT THE BOTTOM. THE END LOCATION FOR THE TEMPORARY UTILITY LOCATION IS MARKED WITH AN "B" AT THE BOTTOM. UTILITY SERVICE SHALL CONTINUE ON TO LOCATION "C" IF INDICATED.

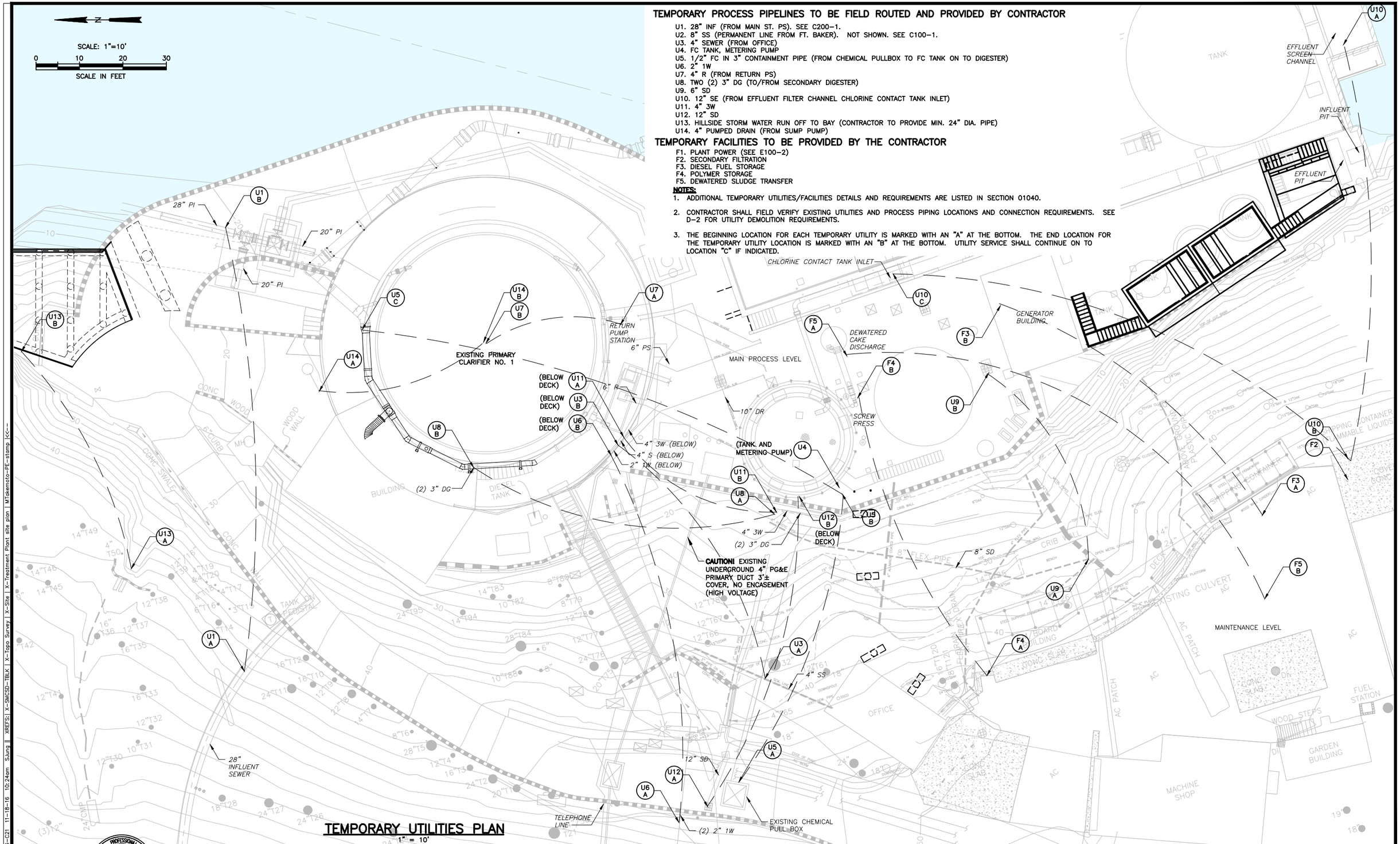

TEMPORARY UTILITIES PLAN

1" = 10'

REGISTERED PROFESSIONAL ENGINEER MARK W. TAKEMOTO No. 64369 Exp. 06-30-17 CIVIL STATE OF CALIFORNIA

0" 1" VERIFY SCALES BAR IS ONE INCH LONG ON FULL SIZE DRAWING. IF NOT ONE INCH LONG ON THIS DRAWING, ADJUST SCALES ACCORDINGLY

RMC water and environment

REV	DATE	BY	APVD	DESCRIPTION

DESIGNED M. TAKEMOTO
DRAWN C. TO
CHECKED M. NAKAMOTO

SUBMITTED: MARK TAKEMOTO, RMC PROJECT ENGINEER CE-64369
APPROVED: STEVE CLARY, RMC ENGINEER CE-30318

SAUSALITO · MARIN CITY SANITARY DISTRICT

TREATMENT AND WET WEATHER FLOW UPGRADE

TEMPORARY UTILITIES PLAN

DWG NO C21
SHEET NO 39 OF 226
PROJ NO 055-006
DATE NOVEMBER 2016

FILENAME: 0055-006-C21 11-18-16 10:24am SJung XREFS: X-SMCSD-TBLK | X-Topo Survey | X-Site | X-Treatment Plant site plan | MTakemoto-PE-stamp

Last Saved By: mtakemoto 10-24-16 08:49am

N

SCALE: 1"=20'

0 20 40 60

SCALE IN FEET

SAN FRANCISCO BAY

SEE DWGS C100-2 AND C200-1

SEE DWG C100-3

NOTES:

1. LOCATION AND DEPTHS OF EXISTING FORT BAKER 8" SEWER AND OTHER UTILITIES ARE APPROXIMATE. NOT ALL UTILITIES MAY BE SHOWN. CONTRACTOR SHALL POTHOLE, LOCATE, AND VERIFY UTILITIES IN THE FIELD.
2. WORK IS REQUIRED IN CLOSE PROXIMITY TO AN EXISTING FIBER OPTIC (FO) LINE AND HIGH VOLTAGE PG&E POWER FEED. THE CONTRACTOR SHALL USE EXTREME CAUTION WHEN WORKING IN THESE AREAS. THE CONTRACTOR SHALL AVOID DAMAGING OR DISRUPTING THE FO LINE. ANY FINES OR PENALTIES RESULTING FROM INTERRUPTION OF THE FO LINE OR SERVICE SHALL BE THE SOLE RESPONSIBILITY OF THE CONTRACTOR AT NO ADDITIONAL COST TO THE DISTRICT.
3. WORK SHALL BE PERFORMED IN ACCORDANCE WITH SECTION 01040.
4. EXISTING CONCRETE MANHOLE SHALL BE REHABILITATED. THE EXISTING MANHOLE IS APPROXIMATELY 4 FEET BY 6 FEET AND 14 FEET DEEP. THE EXISTING MANHOLE IS A CONFINED SPACE. CONTRACTOR SHALL REPAIR THE ENTIRE CONCRETE INTERIOR SURFACE OF THE MANHOLE IN ACCORDANCE WITH SECTION 03740 AND SECTION 09960. THE INTERIOR OF THE MANHOLE SHALL BE LINED WITH AN EPOXY COATING SYSTEM IN ACCORDANCE WITH SECTION 09960. THE CONTRACTOR SHALL INSTALL A NEW CONCRETE TOP WITH A PRECAST H20 TRAFFIC RATED MANHOLE LID ON THE EXISTING STRUCTURE.
5. CONTRACT SHALL STAKE PIPELINE ALIGNMENTS FOR APPROVAL BY THE CONSTRUCTION MANAGER AND NPS AT LEAST TWO WEEKS PRIOR TO THE START OF CONSTRUCTION.
6. ALL BURIED PLASTIC PIPE SHALL BE INSTALLED WITH LOCATING WIRE AS REQUIRED IN SECTION 02500.

EFFLUENT FILTERS

EXISTING PRIMARY CLARIFIER 1

PRIMARY CLARIFIER 2

(E) SUMP PUMPS

HEADWORKS

CAUTION! EXISTING UNDERGROUND 4" PG&E PRIMARY DUCT 3'± COVER, NO ENCASEMENT (HIGH VOLTAGE)

EQ STRUCTURE

PLANT ACCESS ROAD

40' RADIUS BEND

40' RADIUS BEND

EXISTING 28" INFLUENT SEWER

CAUTION! EXISTING UNDERGROUND 4" PG&E PRIMARY DUCT 3'± COVER, NO ENCASEMENT (HIGH VOLTAGE)

(2) 2" 1W (LOCATION IS APPROXIMATE), SEE NOTE 1

40' RADIUS BEND

CONTRACTOR SHALL PROTECT EXISTING TREES IN PLACE AND SHALL ADJUST THE PIPELINE ALIGNMENT AS NECESSARY TO AVOID TREE ROOT ZONES AT NO ADDITIONAL COST TO THE OWNER, TYP.

MAINTAIN SEPERATION REQUIREMENTS FROM POTABLE WATER LINE PER DETAIL C384

8" FORT BAKER FORCE MAIN EXTENSION FOR PROFILE SEE DWG C200-3

HEAVY VEGETATION THROUGHOUT HILLSIDE

EXISTING 20" FORCE MAIN SEWER

EXISTING SEWER MANHOLE

MH1

CAUTION! EXISTING FO LINE. SEE NOTE 2

EXISTING 8" FORT BAKER SEWER

FORT BAKER ROAD

CONSTRUCT 4' DIA SEWER MANHOLE PER DETAIL C200

EXISTING 8" FORT BAKER SEWER

EXISTING 1" HYPOCHLORITE LINE IN 3" CONTAINMENT PIPE

EXISTING 6" FORT BAKER SEWER

REHABILITATE EXISTING CONCRETE MANHOLE. SEE NOTE 4

EAST ROAD

ALEXANDER AVENUE

18

19

PLAN
1" = 20'

Estimated Cut and Fill Quantites (Cubic Yards)			
Area	Cut	Fill	Net
New Road	1003	9	994
Primary Clarifier No. 2	1805	0	1805
Headworks/EQ Strucutre	4456	0	4456
Admin Bldg Retaining Wall	165	0	165
Area Around EQ Structure	637	18	620
Total	**8067**	**27**	**8040**

REGISTERED PROFESSIONAL ENGINEER — Mark W. TAKEMOTO — No. 64369 — Exp. 06-30-17 — CIVIL — STATE OF CALIFORNIA

0" 1" — VERIFY SCALES — BAR IS ONE INCH LONG ON FULL SIZE DRAWING. IF NOT ONE INCH LONG ON THIS DRAWING, ADJUST SCALES ACCORDINGLY

RMC water and environment

REV	DATE	BY	APVD	DESCRIPTION

DESIGNED M. TAKEMOTO
DRAWN C. TO
CHECKED M. NAKAMOTO

SUBMITTED: MARK TAKEMOTO, RMC PROJECT ENGINEER CE-64369
APPROVED: STEVE CLARY, RMC ENGINEER CE-30318

SAUSALITO · MARIN CITY SANITARY DISTRICT

TREATMENT AND WET WEATHER FLOW UPGRADE

CIVIL
SITE GRADING AND PAVING
OVERALL PLAN

DWG NO C100-1
SHEET NO 40 OF 226
PROJ NO 055-006
DATE NOVEMBER 2016

FILENAME: 0055-006-C100-1 11-18-16 11:14am SJung || XREFS: X-SMCSD-TBLK | X-Topo Survey | X-Site | X-Treatment Plant site plan | 286F_E100-2 | MTakemoto-PE-stamp |<<--

Last Saved By: SJung 11-18-16 10:32am

SAN FRANCISCO BAY

SCALE: 1"=10'
0 10 20 30
SCALE IN FEET

NOTES:

1. ONLY HEADWORKS/EQ STRUCTURE FOOTPRINT SHOWN FOR CLARITY. SEE DRAWING M100-1 FOR ADDITIONAL DETAILS.
2. REDUCE HEIGHT OF EXISTING PG&E HIGH VOLTAGE PULL BOX. CONTRACTOR SHALL SAW CUT THE TOP OFF THE EXISTING PULL BOX TO A DEPTH AS NEEDED TO INSTALL A NEW ACCESS COVER AT EL. 44.75. THE ACCESS COVER SHALL BE H20 RATED AND COMPLY WITH PG&E STANDARDS. WORK SHALL ONLY BE PERFORMED WHEN THE PG&E 12KV SERVICE LINE IS DE-ENERGIZED. SEE SECTION 01040.
3. ALL PROPOSED CATCH BASIN SHALL BE PER (C182).
4. AREAS POTENTIALLY CONTAINING HARD GREENSTONE ARE INDICATED IN THE GEOTECH REPORT TITLED "GEOTECHNICAL INVESTIGATION , TREATMENT PLANT UPGRADE PROJECT, SAUSALITO-MARIN CITY SANITARY DISTRICT", MILLER PACIFIC ENGINEERING GROUP, MARCH 2014
5. CONCRETE PAVEMENT SHALL BE PER CALTRANS JOINT PLAIN CONCRETE PAVEMENT REVISED STANDARD PLAN RSP P1. CONCRETE PAVEMENT SHALL HAVE A MINIMUM THICKNESS OF 7-INCHES OVER A 12-INCH LAYER OF AGGREGATE BASE. FOR GRADES GREATER THAN 3%, CONCRETE PAVING SHALL BE INTENTIONALLY SCARIFIED.

VIEWING AREA, SEE DWG S030-1
REMOVABLE GUARD POST (TYP OF 3), SEE (C143)
4'-0"
S7
S8
CB7 RIM 21.92
CB8 RIM 21.92
R5
S6
CB6 RIM 23.50
S9
S5
RETAINING WALL, SEE DETAIL 02006 ON DWG S-6
CONCRETE SLAB, SEE STRUCT DWGS
GUARD RAIL AROUND OPENING AND EXISTING STAIRS
EXISTING STAIRS, PROTECT IN PLACE
21.15
19.50
21.40
19.00
EXISTING SUMP PUMPS
AC PAVEMENT PER (C107)
PRIMARY CLARIFIER 2
EXISTING PRIMARY CLARIFIER 1
TOP WEIR 24.64
TOP WEIR 24.66
TOP WEIR 24.63
TOP WEIR 24.64
TW 26.75
TW 26.66
S1
CB3 RIM 15.92
RETAINING WALL, SEE STRUCT DWGS
16.00
22.00
CB2 RIM 21.83
GRIT PUMP PADS
22.06
CONC PAD EL 22.50
PRIMARY SLUDGE/ SCUM PUMP PAD
R=34.75'
R4
R3
R2
S11
S12
S4
S3
R=25'
4'-0" WIDE x 2'-0" DEEP CONCRETE V-DITCH, SEE DET 11 C110-4 SIM
4' WIDE CONCRETE VALLEY GUTTER SEE (C126), SIM.
CONTRACTOR SHALL REGRADE AREA AS REQUIRE TO DIRECT DRAINAGE TOWARD V-DITCHES.
HEAVY VEGETATION THROUGHOUT HILLSIDE
CONCRETE PAVEMENT. SEE NOTE 5
EQ STRUCTURE FOOTPRINT
PLANT ACCESS ROAD
PG&E 12KV VAULT, SEE NOTE 2
LOWER SOIL NAIL WALL, SEE DWG C110-3
S13
S14
2'-0" WIDE x 1'-0" DEEP CONCRETE V-DITCH, SEE DET 11 C110-4
AC PAVING
UPPER SOIL NAIL WALL, SEE DWG C110-1
RETAINING WALL, SEE DETAIL 02006 ON DWG S-6
CONCRETE PAVEMENT
15.25
EQ PUMP PADS
S10
CB4 RIM 15.17
EL 29.33
FERRIC CHLORIDE TANK PAD
S2
CB10 RIM 44.5
CB9 RIM 44.5
S15
S16
R1
CB5 RIM 49.50
EXISTING CHEMICAL PULL BOX, PROTECT IN PLACE
EFFLUENT FILTERS
S17
S18
EL 25.33
EL 33.50
TEMPORARY WOODEN STAIRS PROFILE, SEE DWG C100-4
EL 42.25
EL 48.08
S19
S20
GM/BOARD BUILDING
CONC SLAB
OFFICE
AC PATCH
CRIB WALL
OPEN METAL DRAINAGE
MATCHLINE FOR CONTINUATION SEE C100-3

PLAN
1" = 10'

REGISTERED PROFESSIONAL ENGINEER MARK W. TAKEMOTO No. 64369 Exp. 06-30-17 CIVIL STATE OF CALIFORNIA

0" 1" VERIFY SCALES BAR IS ONE INCH LONG ON FULL SIZE DRAWING. IF NOT ONE INCH LONG ON THIS DRAWING, ADJUST SCALES ACCORDINGLY

RMC water and environment

REV	DATE	BY	APVD	DESCRIPTION

DESIGNED M. TAKEMOTO
DRAWN C. TO
CHECKED M. NAKAMOTO

SUBMITTED: MARK TAKEMOTO, RMC PROJECT ENGINEER CE-64369
APPROVED: STEVE CLARY, RMC ENGINEER CE-30318

SAUSALITO · MARIN CITY SANITARY DISTRICT

TREATMENT AND WET WEATHER FLOW UPGRADE

CIVIL
SITE GRADING AND PAVING PLAN - 1

DWG NO C100-2
SHEET NO 41 OF 226
PROJ NO 055-006
DATE NOVEMBER 2016

FILENAME: 0055-006-C100-1 11-18-16 11:15am SJung || XREFS: | X-SMCSD-TBLK | X-Topo Survey | X-Site | X-Treatment Plant site plan | 286F_E100-2 | MTakemoto-PE-stamp |<<--

Last Saved By: SJung 11-18-16 10:32am

MATCHLINE FOR CONTINUATION SEE INSERT PLAN ON THE RIGHT

MATCHLINE FOR CONTINUATION SEE C100-2

EFFLUENT FILTERS

12" SD. DIRECT SD TO BEACH TO THE SOUTH OF EXISTING STRUCTURE

NEW DI. CONTRACTOR TO SET RIM ELEVATION AT 0.5 FEET ABOVE UPHILL EXISTING GRADE. SEE C107

12" SD. CONTRACTOR TO VERIFY ALIGNMENT IN THE FIELD. PIPE SHALL BE INSTALLED IN ACCORDANCE WITH THE CONTRACT SPECIFICATIONS.

NEW STAIRCASE. REMOVE EXISTING FENCING AND VEGETATION AS REQUIRED.

REPOSITION EXISTING SHED TO PROVIDE CLEARANCE FOR NEW STAIRS

PROTECT EXISTING TREE IN PLACE, TYP.

STORM DRAIN CLEAN OUT. SEE C216

12" SD. SEE DWG C200-1 FOR CONTINUATION

EL ~51.3 VIF

EX. CONC. PAD EL ~61.5 VIF

CONNECT TRENCH DRAIN TO EXISTING STORM DRAIN

NEW CONCRETE CURB PER DET C120

DEMOLISH EXISTING 2' HIGH WOOD RETAINING WALL

DEMOLISH EXISTING BRICK WALKWAY

MATCH EXISTING PAVEMENT ELEVATION. NEW/EXISTING AC TRANSITION PER DET C109, TYPICAL

PROTECT EXISTING DI IN PLACE

PRE-SLOPED TRENCH DRAIN PER SECTION 02700

AC ROAD/GRAVEL TRANSITION PER DET C108, TYP

PROTECT EXISTING TREE IN PLACE, TYP.

AC ROAD/GRAVEL TRANSITION PER DET C108, TYP

CONFORM TO EXISTING

NEW AC PAVING NEXT TO EXISTING CURB PER DET C120

NEW AC PAVEMENT PER DET C107

ONE 3" AND THREE 1" ELECTRICAL AND CONTROLS CONDUITS LOCATED ALONG HILLSIDE. CONTRACTOR SHALL VERIFY LOCATION AND FUNCTION IN THE FIELD AND REROUTE AROUND NEW RETAINING WALL

NEW AC PAVEMENT PER DET C107

SOIL NAIL WALL, SEE DWG C110-3

DURING ROADWORK, INSTALL TWO (2) 1" CONDUITS AND TERMINATE IN NEW 12"x18" CHRISTY BOXES AT EACH SIDE. CONFIRM EXACT LOCATION WITH OWNER

ABANDONED AUTOMATIC GATE WIRING LOCATED IN THIS AREA. CONTRACTOR TO DEMOLISH

EL 69.25

CONCRETE STEPS WALKWAY, SEE DWG S-16

NEW AC PAVEMENT PER DET C107 SEE NOTE 1.

EL 74.25

EXISTING ELECTRICAL BOXES PROTECT IN PLACE, ADJUST TO FINAL GRADE AS NEEDED

EXISTING ELECTRICAL BOXES PROTECT IN PLACE, ADJUST TO FINAL GRADE AS NEEDED

MATCH EXISTING PAVEMENT ELEVATION NEW/EXISTING AC TRANSITION PER DET C109, TYPICAL

MATCH EXISTING PAVEMENT ELEVATION. NEW/EXISTING AC TRANSITION PER DET C109, TYPICAL

SCALE: 1"=10'

0 10 20 30

SCALE IN FEET

PLAN
1" = 10'

MATCHLINE FOR CONTINUATION SEE C100-2

MATCHLINE FOR CONTINUATION SEE UPPER LEFT

INSERT PLAN
1" = 10'

NOTES:

1. CONTRACTOR SHALL MATCH EXISTING GRADELINES UNLESS NOTED OTHERWISE.

FILENAME: 0055-006-C100-1 11-18-16 11:16am SJung | XREFS: X-SMCSD-TBLK | X-Topo Survey | X-Site | X-Treatment Plant site plan | 286F_E100-2 | MTakemoto-PE-stamp |<<--

Last Saved By: SJung 11-18-16 10:32am

REGISTERED PROFESSIONAL ENGINEER MARK W. TAKEMOTO No. 64369 Exp. 06-30-17 CIVIL STATE OF CALIFORNIA

0" 1" — VERIFY SCALES — BAR IS ONE INCH LONG ON FULL SIZE DRAWING. IF NOT ONE INCH LONG ON THIS DRAWING, ADJUST SCALES ACCORDINGLY

RMC water and environment

REV	DATE	BY	APVD	DESCRIPTION

DESIGNED M. TAKEMOTO
DRAWN C. TO
CHECKED M. NAKAMOTO

SUBMITTED: MARK TAKEMOTO, RMC PROJECT ENGINEER CE-64369

APPROVED: STEVE CLARY, RMC ENGINEER CE-30318

SAUSALITO · MARIN CITY SANITARY DISTRICT

TREATMENT AND WET WEATHER FLOW UPGRADE

CIVIL
SITE GRADING AND PAVING PLAN - 2

DWG NO C100-3
SHEET NO 42 OF 226
PROJ NO 055-006
DATE NOVEMBER 2016

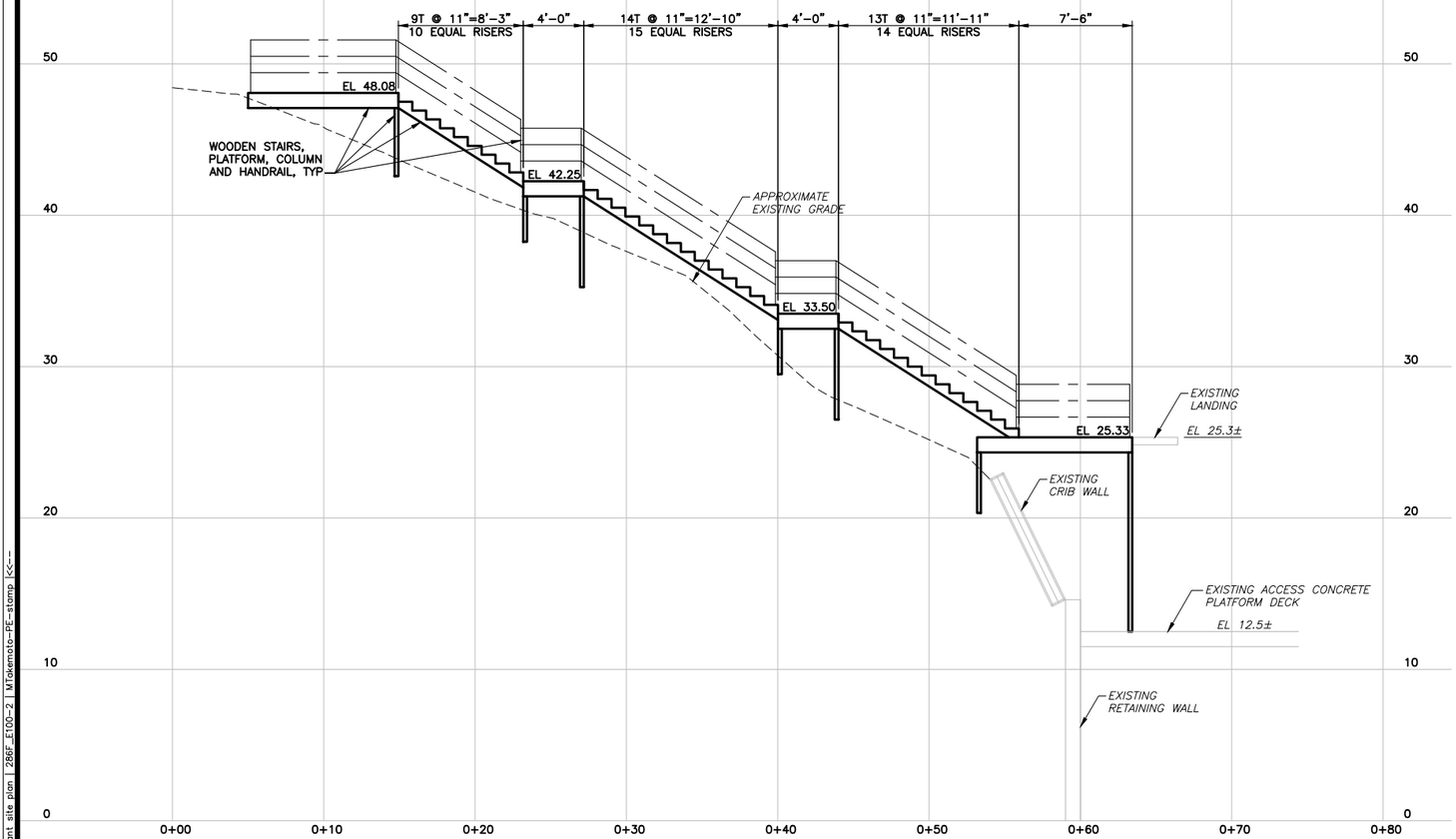

TEMPORARY STAIRS PROFILE (FOR PLAN SEE DWG C100-2)

1" = 5'

NOTES:

1. THIS DRAWING FOR TEMPORARY STAIRS IS CONCEPTUAL ONLY. THE CONTRACTOR SHALL BE RESPONSIBLE FOR EXAMINING EXISTING FIELD CONDITIONS AND THEN DESIGNING AND CONSTRUCTING TEMPORARY STAIRS TO PROVIDE GENERAL ACCESS BETWEEN THE OFFICE AND PLANT FACILITIES DURING CONSTRUCTION. THE DESIGN OF THE TEMPORARY STAIRS SHALL BE PREPARED AND STAMPED BY A STRUCTURAL ENGINEER LICENSED IN THE STATE OF CALIFORNIA AND SHALL COMPLY WITH ALL APPLICABLE CODES AND SAFETY REGULATIONS.
2. THE TEMPORARY STAIRS SHALL BE PROVIDED WITH HAND/GUARD RAILING AND LIGHTING. THE MINIMUM TREAD WIDTH SHALL BE 36".
3. THE CONTRACTOR SHALL BE RESPONSIBLE FOR REGULARLY INSPECTING AND MAINTAINING IN GOOD CONDITION THE TEMPORARY STAIRS.
4. THE CONTRACTOR SHALL COMPLETELY DEMOLISH THE TEMPORARY STAIRS ONCE PERMANENT STAIR ACCESS HAS BEEN CONSTRUCTED AND ACCEPTED BY THE ENGINEER.

REGISTERED PROFESSIONAL ENGINEER — MARK W. TAKEMOTO — No. 64369 Exp. 06-30-17 CIVIL — STATE OF CALIFORNIA

0" 1" — VERIFY SCALES — BAR IS ONE INCH LONG ON FULL SIZE DRAWING. IF NOT ONE INCH LONG ON THIS DRAWING, ADJUST SCALES ACCORDINGLY

RMC water and environment

REV	DATE	BY	APVD	DESCRIPTION

DESIGNED M. TAKEMOTO
DRAWN C. TO
CHECKED M. NAKAMOTO

SUBMITTED: MARK TAKEMOTO, RMC PROJECT ENGINEER CE-64369
APPROVED: STEVE CLARY, RMC ENGINEER CE-30318

SAUSALITO · MARIN CITY SANITARY DISTRICT

TREATMENT AND WET WEATHER FLOW UPGRADE

CIVIL
TEMPORARY STAIRS

DWG NO C100-4
SHEET NO 43 OF 226
PROJ NO 055-006
DATE NOVEMBER 2016

FILENAME: 0055-006-C100-1 11-18-16 10:30am SJung | XREFS: X-SMCSD-TBLK | X-Topo Survey | X-Site | X-Treatment Plant site plan | 286F_E100-2 | MTakemoto-PE-stamp |<<--

Last Saved By: SJung 11-17-16 09:50am

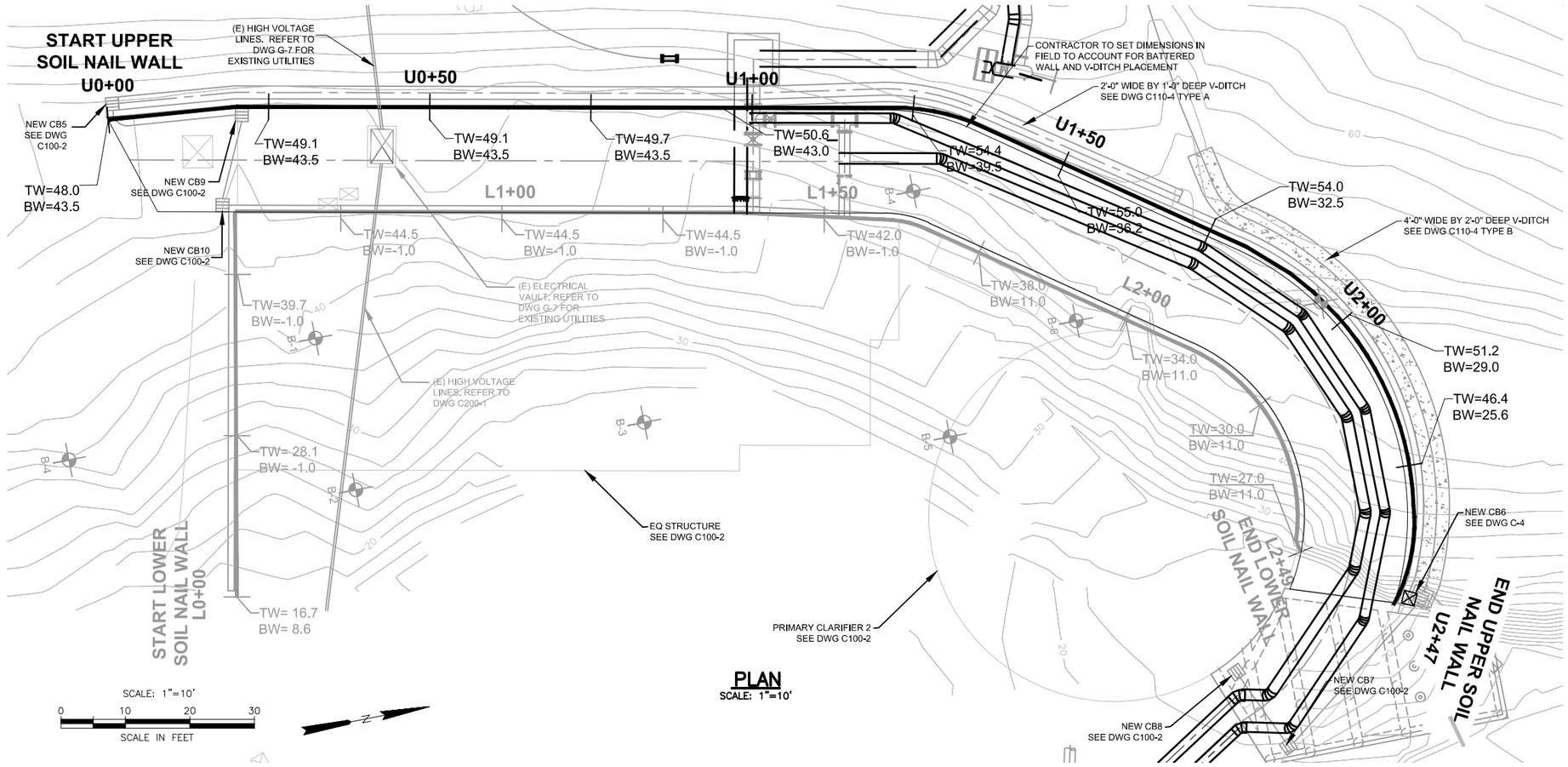

PLAN
SCALE: 1"=10'

SCALE: 1"=10'
0 10 20 30
SCALE IN FEET

LEGEND

- ★ SACRIFICIAL VERIFICATION NAIL (MATCH ADJACENT SOIL NAILS)
- B-1 APPROXIMATE BORING LOCATION. REFER TO GEOTECHNICAL REPORT

PRODUCTION SOIL NAILS		
SYMBOL	NAIL LENGTH (NL)	DESIGN LOAD (KIPS)
●	SEE PROFILE	2.7 x Nail Length

NOTES
- DESIGN LOAD CALCULATION EXAMPLE - ANY NAIL LOCATED BETWEEN STA U1+00 AND STA U1+29 WILL HAVE A REQUIRED NAIL LENGTH OF 15-FT. THE DESIGN LOAD IS 40.5 KIPS (15 x 2.7 = 40.5).
- SEE TECHNICAL SPECIFICATIONS 2286 AND 3360 FOR ADDITIONAL TESTING REQUIREMENTS.

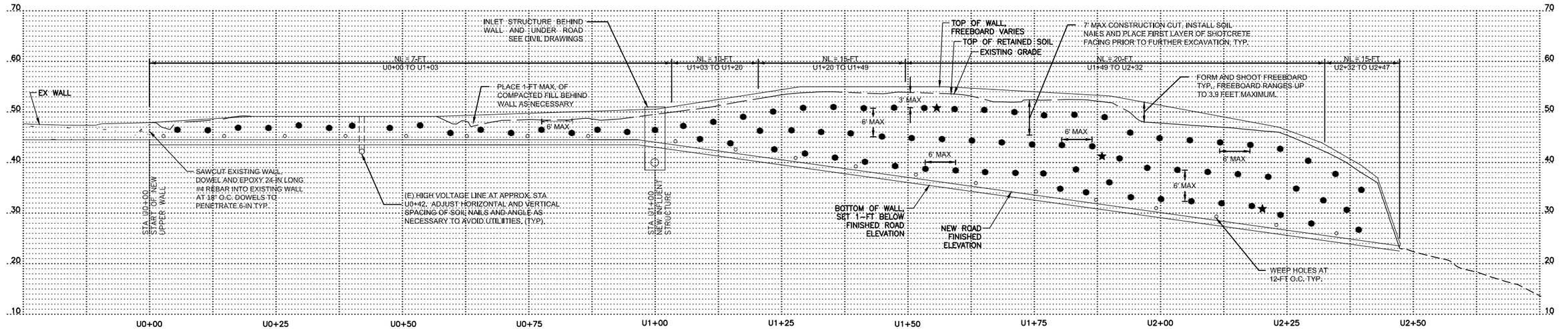

UPPER WALL PROFILE
HORIZ 1"=10' VERT 1"=10'

REGISTERED PROFESSIONAL ENGINEER SCOTT A. STEPHENS No. 2398 Exp. 6/30/17 GEOTECHNICAL STATE OF CALIFORNIA

0" 1" — VERIFY SCALES — BAR IS ONE INCH LONG ON FULL SIZE DRAWING. IF NOT ONE INCH LONG ON THIS DRAWING, ADJUST SCALES ACCORDINGLY

REV	DATE	BY	APVD	DESCRIPTION

DESIGNED	R. AREND
DRAWN	R. AREND
CHECKED	S. STEPHENS

SUBMITTED: MARK TAKEMOTO, RMC PROJECT ENGINEER CE-64369
APPROVED: STEVE CLARY, RMC ENGINEER CE-30318

SAUSALITO · MARIN CITY SANITARY DISTRICT

TREATMENT AND WET WEATHER FLOW UPGRADE

GEOTECHNICAL SOIL NAIL UPPER WALL PROFILES

DWG NO C110-1
SHEET NO 44 OF 226
PROJ NO 055-006
DATE NOVEMBER 2016

FILENAME: C110-1, C110-2, and C110-3 (11-17-16) 11-18-16 04:32pm mtakemoto || XREFS: X-SMCSD-TBLK | X-Site | X-SitePlan | X-Treatment Plant site plan | X-Topo Survey new | MTakemoto-PE-stamp |<<--

Last Saved By: mtakemoto 11-18-16 02:09pm

SCALE: 1"=10'

0 10 20 30

SCALE IN FEET

LEGEND

★ SACRIFICIAL VERIFICATION NAIL (MATCH ADJACENT SOIL NAILS)

B-1 APPROXIMATE BORING LOCATION. REFER TO GEOTECHNICAL REPORT

PRODUCTION SOIL NAILS		
SYMBOL	NAIL LENGTH (NL)	DESIGN LOAD (KIPS)
●	SEE PROFILE	2.7 x Nail Length

NOTES

- DESIGN LOAD CALCULATION EXAMPLE - ANY NAIL LOCATED BETWEEN STA L0+59 AND STA L1+50 WILL HAVE A REQUIRED NAIL LENGTH OF 40-FT. THE DESIGN LOAD IS 108KIPS (40 x 2.7 = 108).
- SEE TECHNICAL SPECIFICATIONS 2286 AND 3360 FOR ADDITIONAL TESTING REQUIREMENTS.

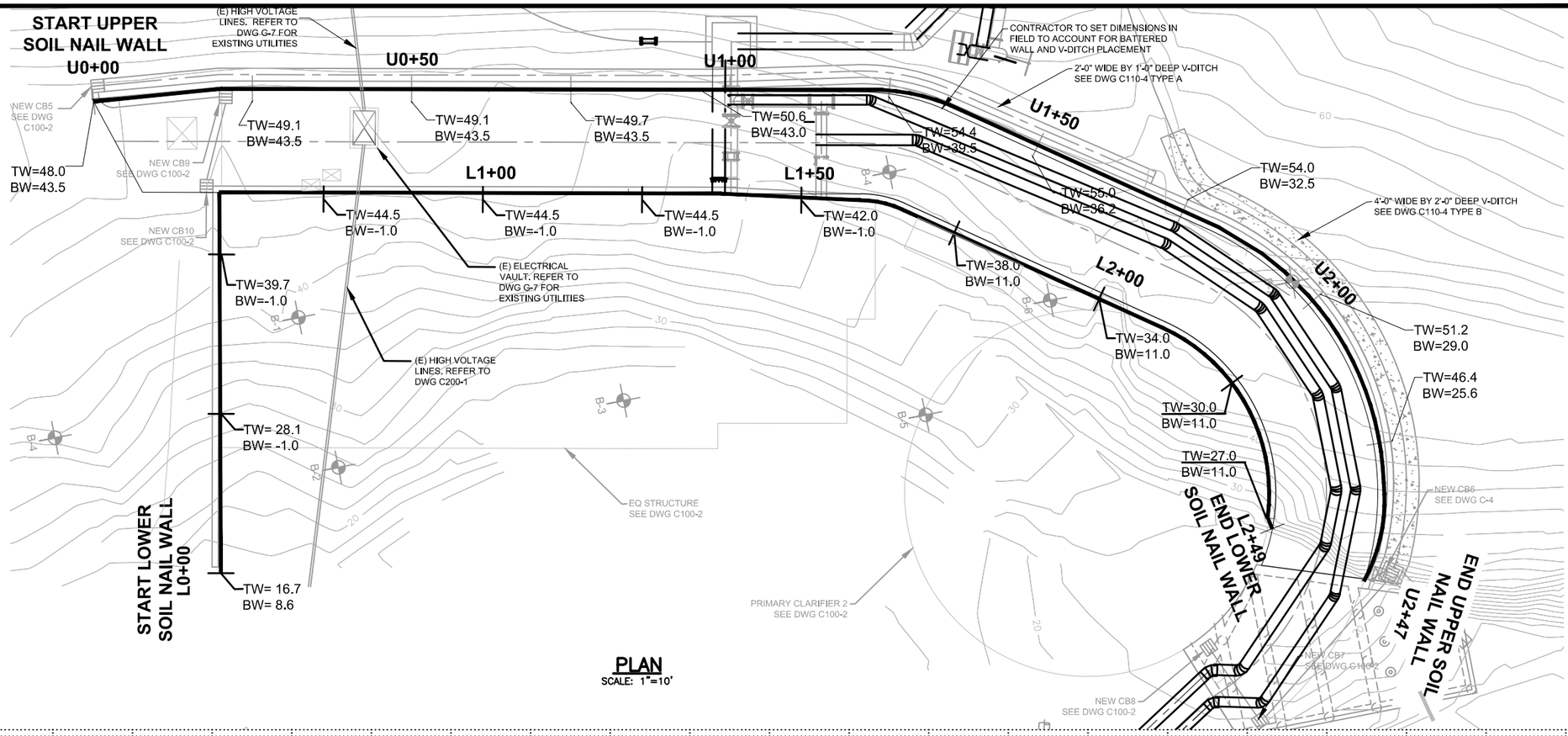

PLAN
SCALE: 1"=10'

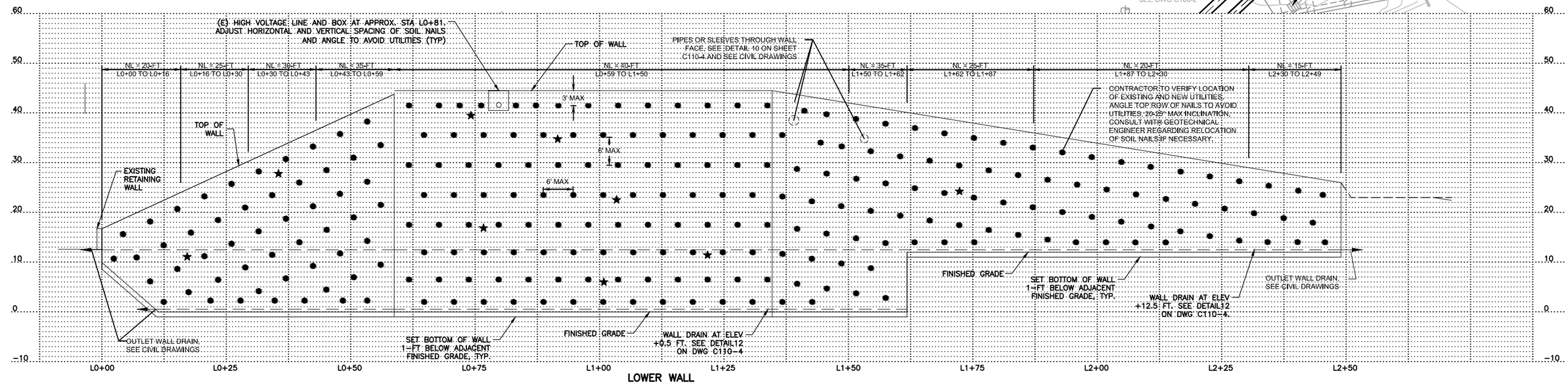

LOWER WALL
PROFILE
HORIZ 1"=10' VERT 1"=10'

REGISTERED PROFESSIONAL ENGINEER SCOTT A. STEPHENS No. 2398 Exp. 6/30/17 GEOTECHNICAL STATE OF CALIFORNIA

0" 1" VERIFY SCALES — BAR IS ONE INCH LONG ON FULL SIZE DRAWING. IF NOT ONE INCH LONG ON THIS DRAWING, ADJUST SCALES ACCORDINGLY

MPEG

REV	DATE	BY	APVD	DESCRIPTION

DESIGNED	R. AREND
DRAWN	R. AREND
CHECKED	S. STEPHENS

SUBMITTED: MARK TAKEMOTO, RMC PROJECT ENGINEER CE-64369

APPROVED: STEVE CLARY, RMC ENGINEER CE-30318

SAUSALITO · MARIN CITY SANITARY DISTRICT

TREATMENT AND WET WEATHER FLOW UPGRADE

GEOTECHNICAL SOIL NAIL LOWER WALL PROFILE

DWG NO	C110-2
SHEET NO	45 OF 226
PROJ NO	055-006
DATE	NOVEMBER 2016

FILENAME: C110-1, C110-2, and C110-3 | 11-17-16) 11-18-16 04:32pm mtakemoto | XREFS: | X-SMCSD-TBLK | X-Site | X-SitePlan | X-Treatment Plant site plan | X-Topo Survey new | MTakemoto-PE-stamp |<c-->

Last Saved By: mtakemoto 11-18-16 02:09pm

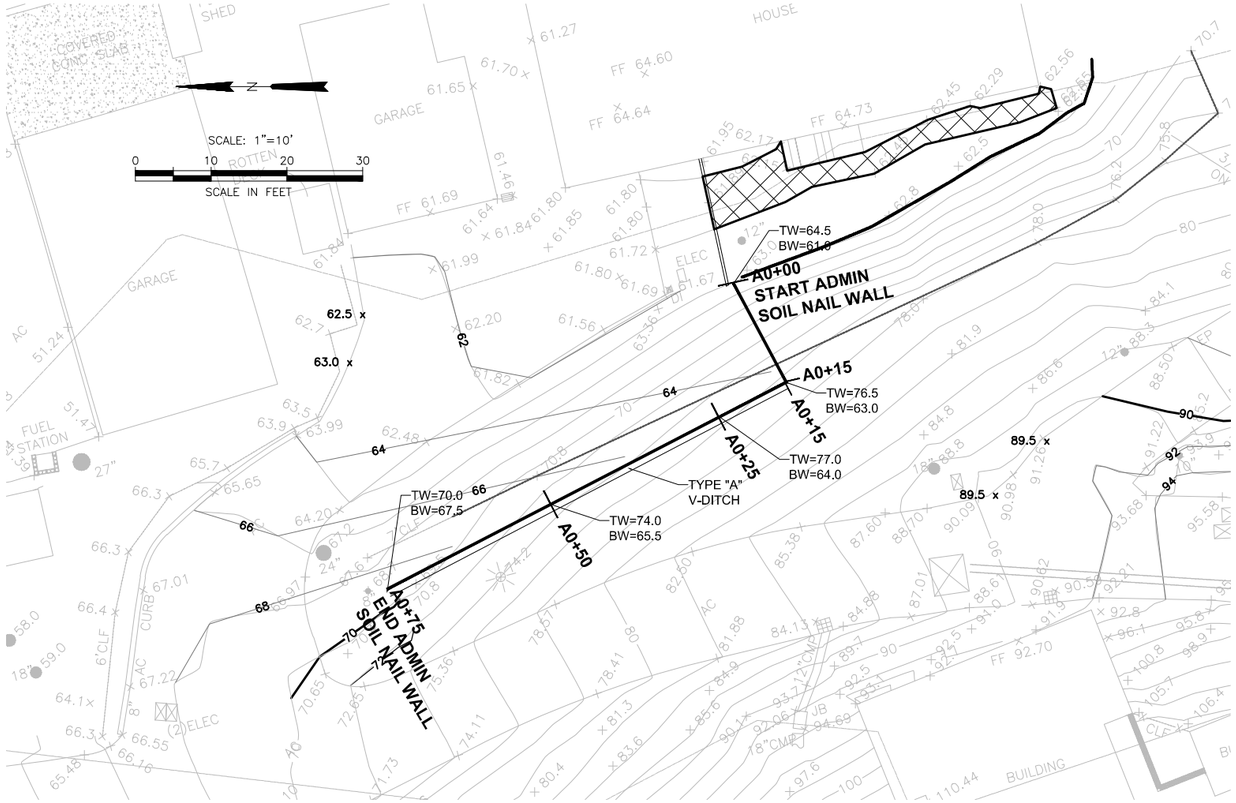

PLAN
1" = 10'

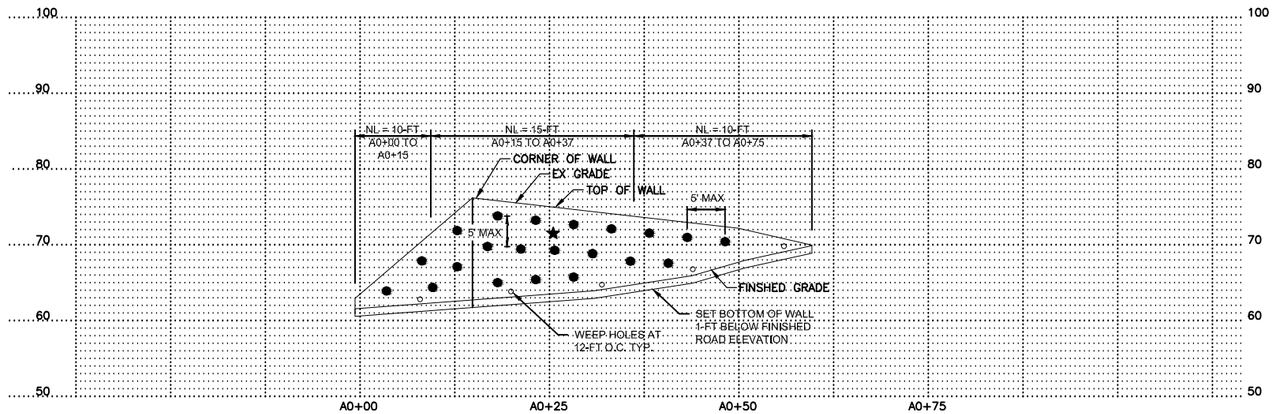

ADMIN RETAINING WALL
PROFILE
HORIZ 1"=10' VERT 1"=10'

LEGEND

★ SACRIFICIAL VERIFICATION NAIL (MATCH ADJACENT SOIL NAILS)

PRODUCTION SOIL NAILS		
SYMBOL	NAIL LENGTH (NL)	DESIGN LOAD (KIPS)
●	SEE PROFILE	0.8 x Nail Length

NOTES

- DESIGN LOAD CALCULATION EXAMPLE - ANY NAIL LOCATED BETWEEN STA A0+10 AND STA A0+55 WILL HAVE A REQUIRED NAIL LENGTH OF 15-FT. THE DESIGN LOAD IS 12 KIPS (15 x 0.8 = 12).
- SEE TECHNICAL SPECIFICATIONS 2286 AND 3360 FOR ADDITIONAL TESTING REQUIREMENTS.

REGISTERED PROFESSIONAL ENGINEER SCOTT A. STEPHENS No. 2398 Exp. 6/30/17 GEOTECHNICAL STATE OF CALIFORNIA

0" 1" — VERIFY SCALES — BAR IS ONE INCH LONG ON FULL SIZE DRAWING. IF NOT ONE INCH LONG ON THIS DRAWING, ADJUST SCALES ACCORDINGLY

REV	DATE	BY	APVD	DESCRIPTION

DESIGNED	S. STEPHENS
DRAWN	R. AREND
CHECKED	R. AREND

SUBMITTED: MARK TAKEMOTO, RMC PROJECT ENGINEER CE-64369

APPROVED: STEVE CLARY, RMC ENGINEER CE-30318

TREATMENT AND WET WEATHER FLOW UPGRADE

GEOTECHNICAL
SOIL NAIL ADMIN WALL PROFILE

DWG NO	C110-3
SHEET NO	46 OF 226
PROJ NO	055-006
DATE	NOVEMBER 2016

FILENAME: C110-4 11-18-16 04:37pm mtakemoto | XREFS: X-SMCSD-TBLK | X-Topo Survey | site | X-Topo Survey new | X-Topo Survey_Road | 0055-006-M400-1 | X-Treatment Plant site plan | 286F_E100-2 | MTakemoto-PE-stamp |<--

Last Saved By: rarend 11-18-16 02:40pm

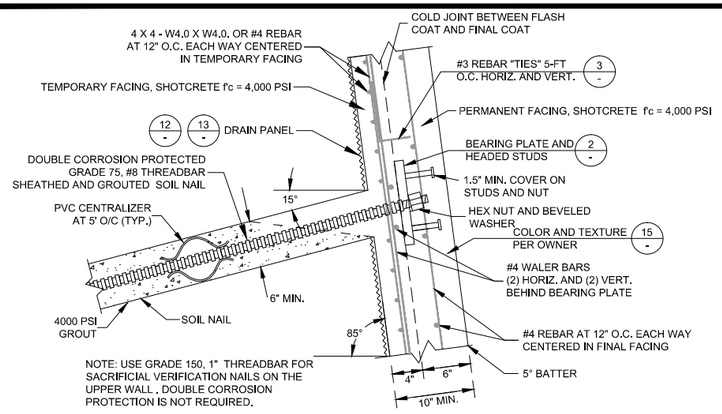

1 - NAIL DETAIL (NOT TO SCALE)

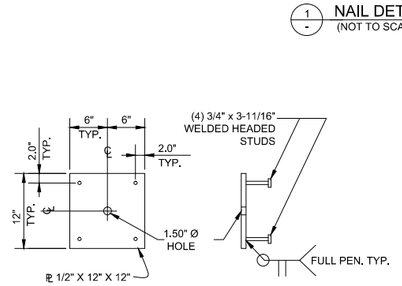

2 - BEARING PLATE DETAIL (NOT TO SCALE)

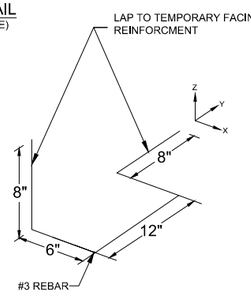

3 - REBAR HOOK "TIES" (NOT TO SCALE)

UPPER SOIL NAIL WALL

SHEET C110-1

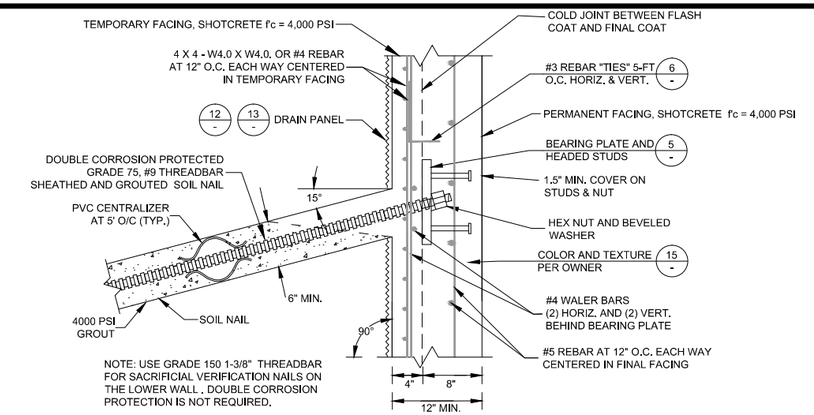

4 - NAIL DETAIL (NOT TO SCALE)

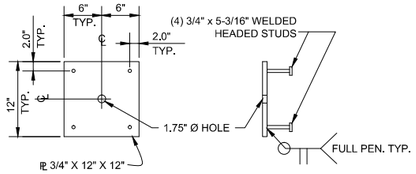

5 - BEARING PLATE DETAIL (NOT TO SCALE)

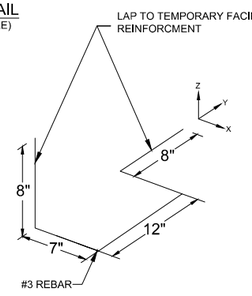

6 - REBAR HOOK "TIES" (NOT TO SCALE)

LOWER SOIL NAIL WALL

SHEET C110-2

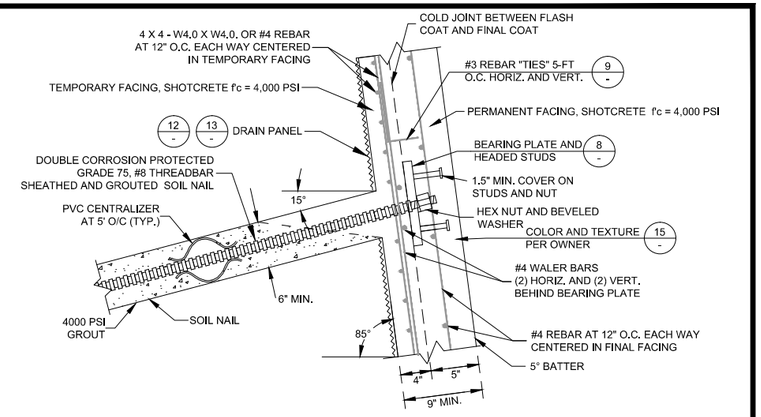

7 - NAIL DETAIL (NOT TO SCALE)

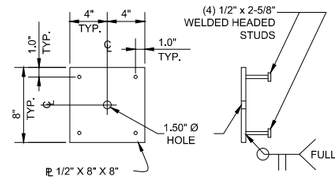

8 - BEARING PLATE DETAIL (NOT TO SCALE)

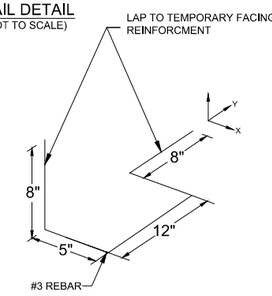

9 - REBAR HOOK "TIES" (NOT TO SCALE)

ADMIN SOIL NAIL WALL

SHEET C110-3

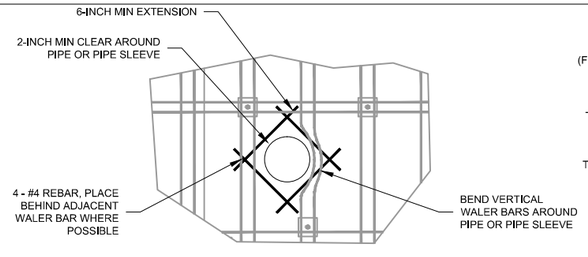

10 - PIPE / PIPE SLEEVE REINFORCEMENT (NOT TO SCALE)

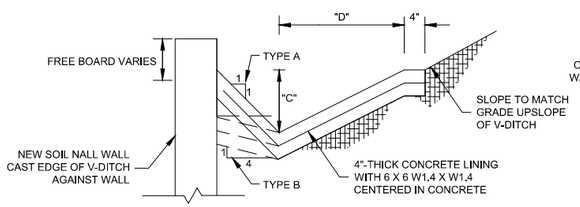

		C	D
TYPE A	2'0"-WIDE X 1'0"-DEEP	12"	12" MIN
TYPE B	4'0"-WIDE X 2'0"-DEEP	24"	24" MIN

11 - CONCRETE V-DITCH DETAIL (NOT TO SCALE)

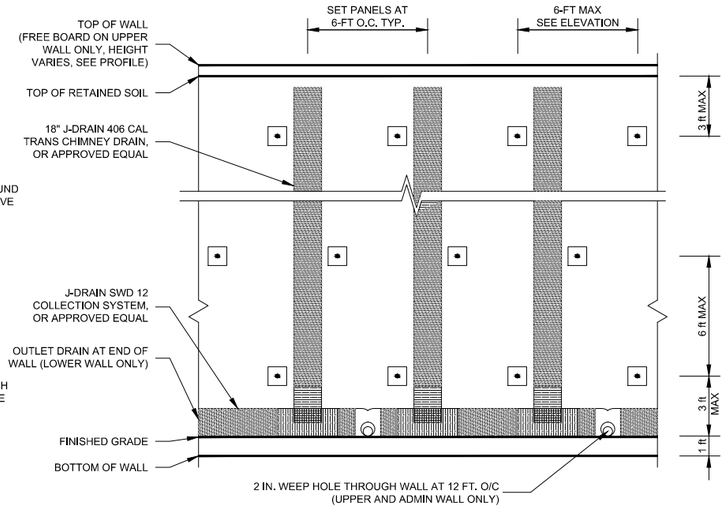

12 - PARTIAL ELEVATION (NOT TO SCALE)

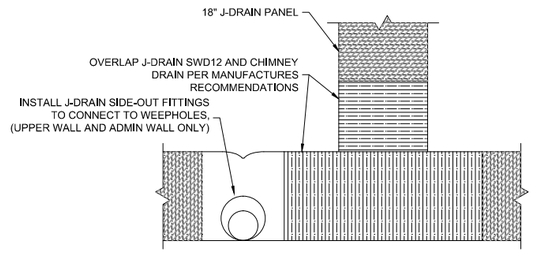

13 - DRAINAGE DETAIL (NOT TO SCALE)

MINIMUM BAR LAPS FOR REINFORCING STEEL (STAGGER SPLICES A MINIMUM OF 24 INCHES)		
SIZE	f'c = 4,000 psi	f'c = 5,000 psi
#3	19"	17"
#4	25"	23"
#5	31"	28"

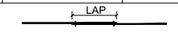

14 - LAP LENGTHS DETAIL (NOT TO SCALE)



OPTION 1

OPTION 2



OPTION 3

15 - WALL COLOR AND FINISH (NOT TO SCALE)

REGISTERED PROFESSIONAL ENGINEER SCOTT A. STEPHENS No. 2398 Exp. 6/30/17 GEOTECHNICAL STATE OF CALIFORNIA

VERIFY SCALES — BAR IS ONE INCH LONG ON FULL SIZE DRAWING. IF NOT ONE INCH LONG ON THIS DRAWING, ADJUST SCALES ACCORDINGLY

MPEG

REV	DATE	BY	APVD	DESCRIPTION

DESIGNED	R. AREND
DRAWN	R. AREND
CHECKED	S. STEPHENS

SUBMITTED: MARK TAKEMOTO, RMC PROJECT ENGINEER CE-64369

APPROVED: STEVE CLARY, RMC ENGINEER CE-30318

SAUSALITO · MARIN CITY SANITARY DISTRICT

TREATMENT AND WET WEATHER FLOW UPGRADE

GEOTECHNICAL SOIL NAIL WALL DETAILS

DWG NO	C110-4
SHEET NO	47 OF 226
PROJ NO	055-006
DATE	NOVEMBER 2016

FILENAME: C110-1, C110-2, and C110-3 (11-17-16) 11-18-16 04:33pm mtakemoto || XREFs: | X-SMCSD-TBLK | X-Site | X-SitePlan | X-Treatment Plant site plan |

Last Saved By: mtakemoto 11-18-16 02:09pm

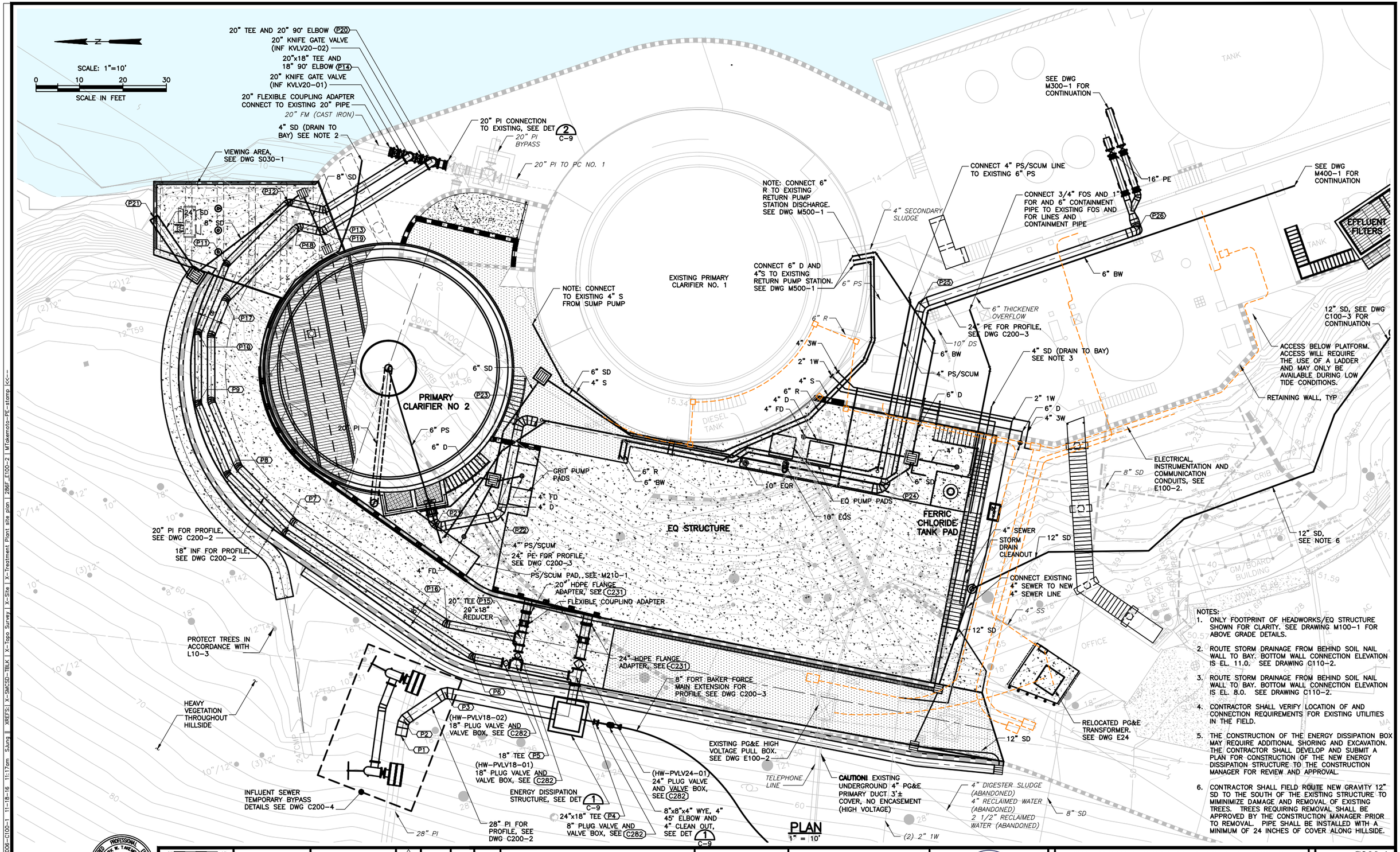

NOTES:

1. ONLY FOOTPRINT OF HEADWORKS/EQ STRUCTURE SHOWN FOR CLARITY. SEE DRAWING M100-1 FOR ABOVE GRADE DETAILS.
2. ROUTE STORM DRAINAGE FROM BEHIND SOIL NAIL WALL TO BAY. BOTTOM WALL CONNECTION ELEVATION IS EL. 11.0. SEE DRAWING C110-2.
3. ROUTE STORM DRAINAGE FROM BEHIND SOIL NAIL WALL TO BAY. BOTTOM WALL CONNECTION ELEVATION IS EL. 8.0. SEE DRAWING C110-2.
4. CONTRACTOR SHALL VERIFY LOCATION OF AND CONNECTION REQUIREMENTS FOR EXISTING UTILITIES IN THE FIELD.
5. THE CONSTRUCTION OF THE ENERGY DISSIPATION BOX MAY REQUIRE ADDITIONAL SHORING AND EXCAVATION. THE CONTRACTOR SHALL DEVELOP AND SUBMIT A PLAN FOR CONSTRUCTION OF THE NEW ENERGY DISSIPATION STRUCTURE TO THE CONSTRUCTION MANAGER FOR REVIEW AND APPROVAL.
6. CONTRACTOR SHALL FIELD ROUTE NEW GRAVITY 12" SD TO THE SOUTH OF THE EXISTING STRUCTURE TO MIMINIMIZE DAMAGE AND REMOVAL OF EXISTING TREES. TREES REQUIRING REMOVAL SHALL BE APPROVED BY THE CONSTRUCTION MANAGER PRIOR TO REMOVAL. PIPE SHALL BE INSTALLED WITH A MINIMUM OF 24 INCHES OF COVER ALONG HILLSIDE.

REGISTERED PROFESSIONAL ENGINEER MARK W. TAKEMOTO No. 64369 Exp. 06-30-17 CIVIL STATE OF CALIFORNIA

0" 1" VERIFY SCALES BAR IS ONE INCH LONG ON FULL SIZE DRAWING. IF NOT ONE INCH LONG ON THIS DRAWING, ADJUST SCALES ACCORDINGLY

RMC water and environment

REV	DATE	BY	APVD	DESCRIPTION

DESIGNED M. TAKEMOTO
DRAWN C. TO
CHECKED M. NAKAMOTO

SUBMITTED: MARK TAKEMOTO, RMC PROJECT ENGINEER CE-64369
APPROVED: STEVE CLARY, RMC ENGINEER CE-30318

SAUSALITO · MARIN CITY SANITARY DISTRICT

TREATMENT AND WET WEATHER FLOW UPGRADE

CIVIL
YARD PIPING PLAN

DWG NO C200-1
SHEET NO 48 OF 226
PROJ NO 055-006
DATE NOVEMBER 2016

FILENAME: 0055-006-C100-1 11-18-16 11:17am SJung || XREFS: | X-SMCSD-TBLK | X-Topo Survey | X-Site | X-Treatment Plant site plan | 286F_E100-2 | MTakemoto-PE-stamp |<<--

Last Saved By: SJung 11-18-16 10:32am

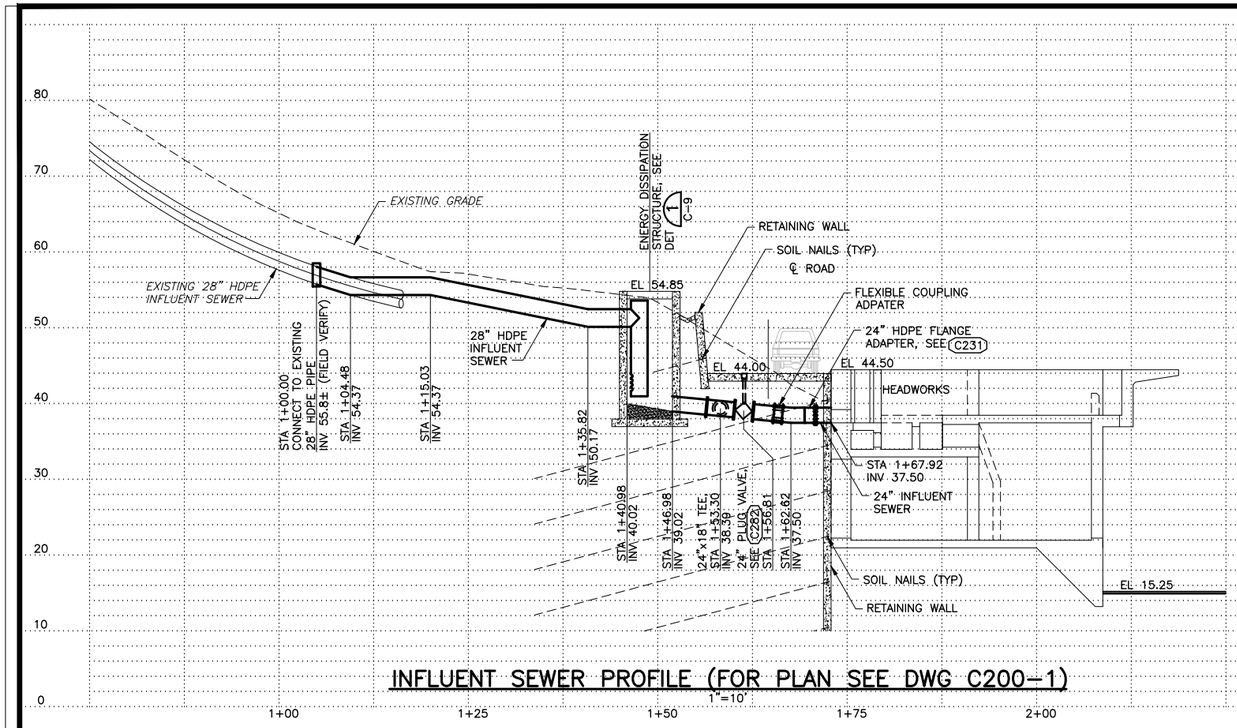

INFLUENT SEWER PROFILE (FOR PLAN SEE DWG C200–1)

1"=10'

0 10 20 30

SCALE IN FEET

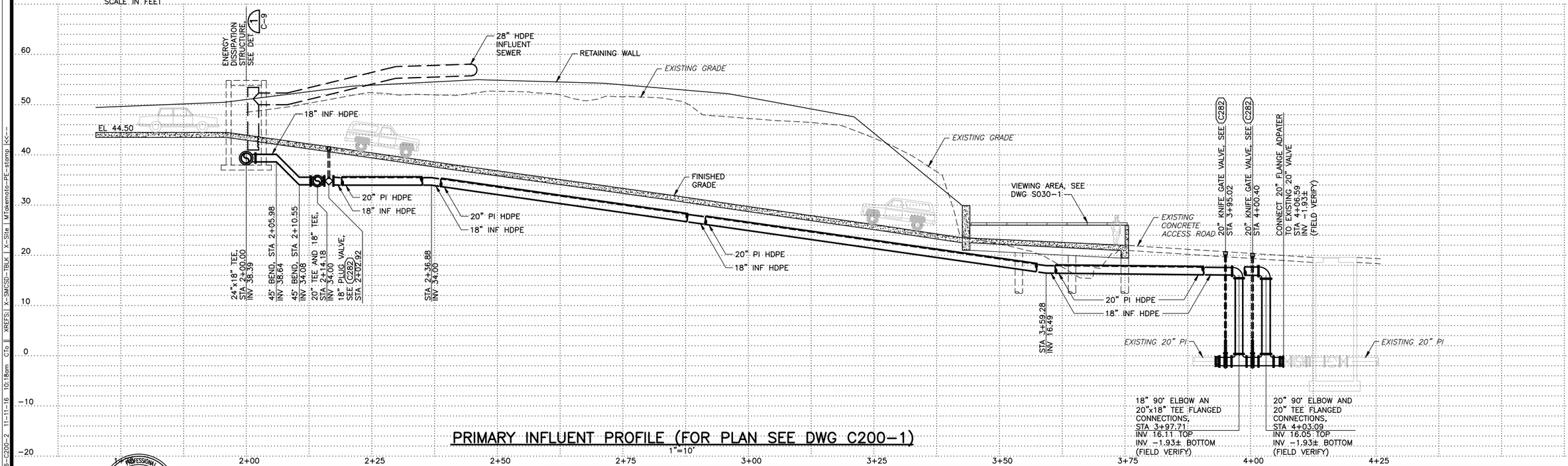

PRIMARY INFLUENT PROFILE (FOR PLAN SEE DWG C200–1)

1"=10'

REGISTERED PROFESSIONAL ENGINEER — MARK W. TAKEMOTO — No. 64369 — Exp. 06-30-17 — CIVIL — STATE OF CALIFORNIA

0" 1" — VERIFY SCALES — BAR IS ONE INCH LONG ON FULL SIZE DRAWING. IF NOT ONE INCH LONG ON THIS DRAWING, ADJUST SCALES ACCORDINGLY

RMC water and environment

REV	DATE	BY	APVD	DESCRIPTION

DESIGNED M. TAKEMOTO
DRAWN C. TO
CHECKED M. NAKAMOTO

SUBMITTED: MARK TAKEMOTO, RMC PROJECT ENGINEER CE-64369
APPROVED: STEVE CLARY, RMC ENGINEER CE-30318

SAUSALITO · MARIN CITY SANITARY DISTRICT

TREATMENT AND WET WEATHER FLOW UPGRADE

PIPE PROFILES - 1

DWG NO C200-2
SHEET NO 49 OF 226
PROJ NO 055-006
DATE NOVEMBER 2016

FILENAME: 0055-006-C200-2 11-11-16 10:18am CTo || XREFS: X-SMCSD-TBLK | X-Site | MTakemoto-PE-stamp |<<--

Last Saved By: mtakemoto 10-24-16 08:50am

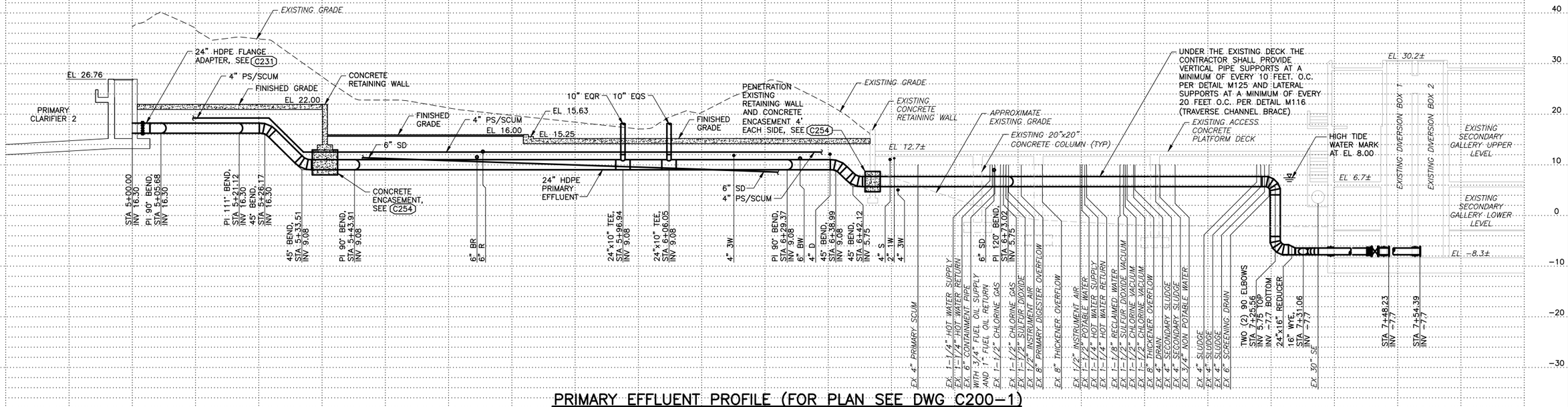

PRIMARY EFFLUENT PROFILE (FOR PLAN SEE DWG C200-1)

1"=10'

0 10 20 30

SCALE IN FEET

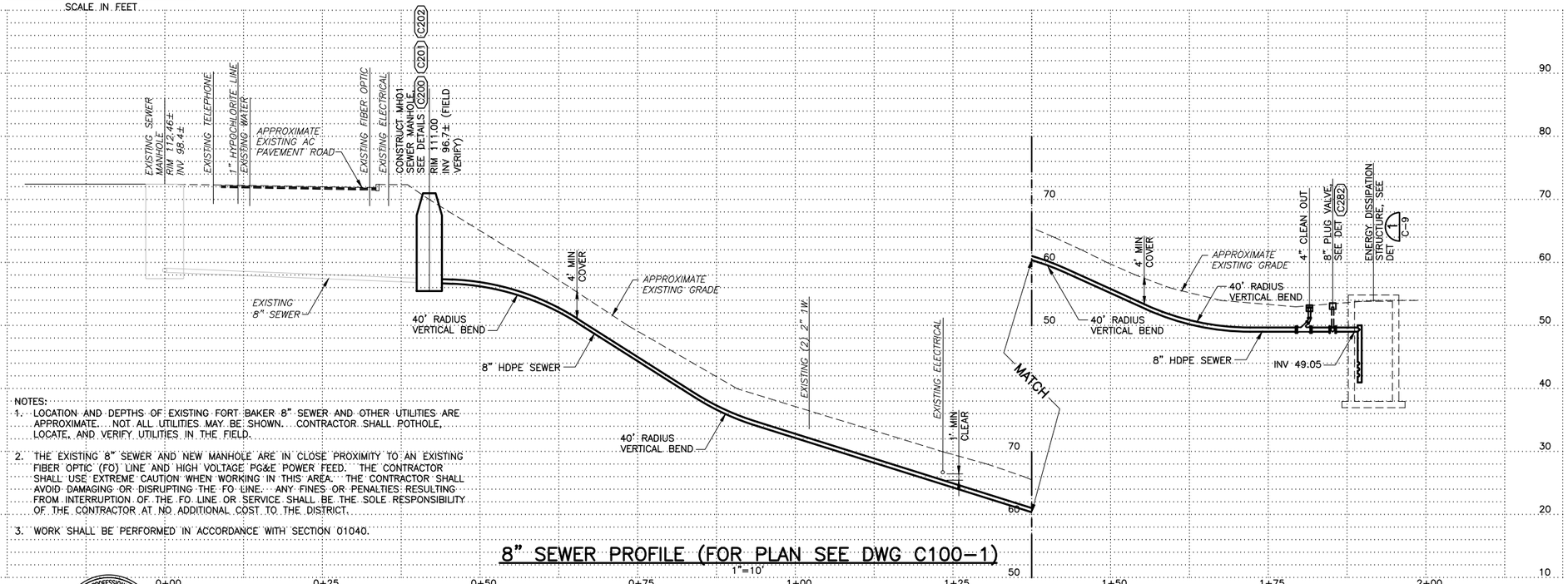

8" SEWER PROFILE (FOR PLAN SEE DWG C100-1)

1"=10'

NOTES:

1. LOCATION AND DEPTHS OF EXISTING FORT BAKER 8" SEWER AND OTHER UTILITIES ARE APPROXIMATE. NOT ALL UTILITIES MAY BE SHOWN. CONTRACTOR SHALL POTHOLE, LOCATE, AND VERIFY UTILITIES IN THE FIELD.
2. THE EXISTING 8" SEWER AND NEW MANHOLE ARE IN CLOSE PROXIMITY TO AN EXISTING FIBER OPTIC (FO) LINE AND HIGH VOLTAGE PG&E POWER FEED. THE CONTRACTOR SHALL USE EXTREME CAUTION WHEN WORKING IN THIS AREA. THE CONTRACTOR SHALL AVOID DAMAGING OR DISRUPTING THE FO LINE. ANY FINES OR PENALTIES RESULTING FROM INTERRUPTION OF THE FO LINE OR SERVICE SHALL BE THE SOLE RESPONSIBILITY OF THE CONTRACTOR AT NO ADDITIONAL COST TO THE DISTRICT.
3. WORK SHALL BE PERFORMED IN ACCORDANCE WITH SECTION 01040.

REGISTERED PROFESSIONAL ENGINEER — MARK W. TAKEMOTO — No. 64369 Exp. 06-30-17 — CIVIL — STATE OF CALIFORNIA

0" 1" — VERIFY SCALES — BAR IS ONE INCH LONG ON FULL SIZE DRAWING. IF NOT ONE INCH LONG ON THIS DRAWING, ADJUST SCALES ACCORDINGLY

RMC water and environment

REV	DATE	BY	APVD	DESCRIPTION

DESIGNED M. TAKEMOTO
DRAWN C. TO
CHECKED M. NAKAMOTO

SUBMITTED: MARK TAKEMOTO, RMC PROJECT ENGINEER CE-64369
APPROVED: STEVE CLARY, RMC ENGINEER CE-30318

SAUSALITO · MARIN CITY SANITARY DISTRICT

TREATMENT AND WET WEATHER FLOW UPGRADE

PIPE PROFILES - 2

DWG NO C200-3
SHEET NO 50 OF 226
PROJ NO 055-006
DATE NOVEMBER 2016

FILENAME: 0055-006-C200-2 11-11-16 10:19am CTo | XREFS: X-SMCSD-TBLK | X-Site | MTakemoto-PE-stamp |<--

Last Saved By: mtakemoto 10-24-16 08:50am

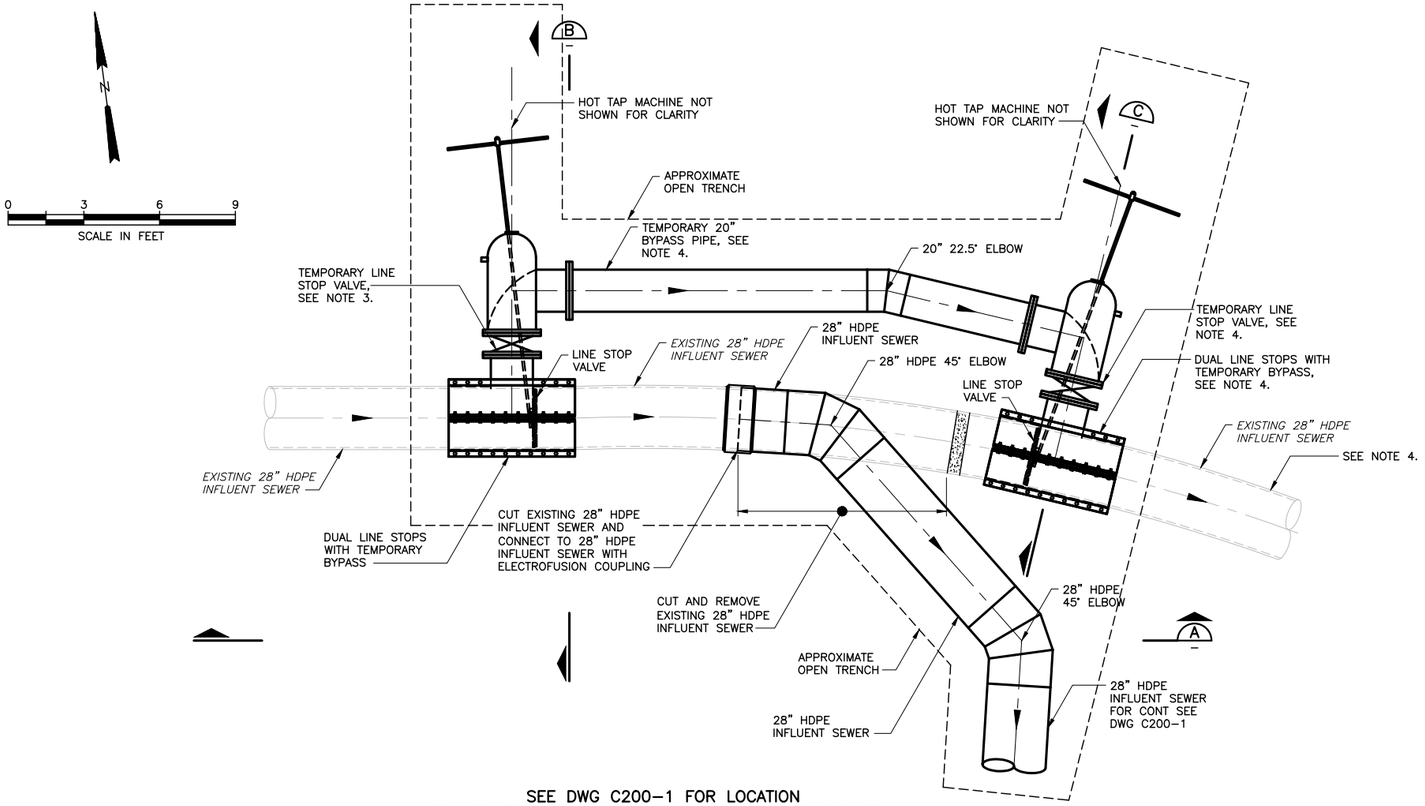

SEE DWG C200-1 FOR LOCATION

INFLUENT SEWER TEMPORARY BYPASS PLAN

1" = 3'-0"

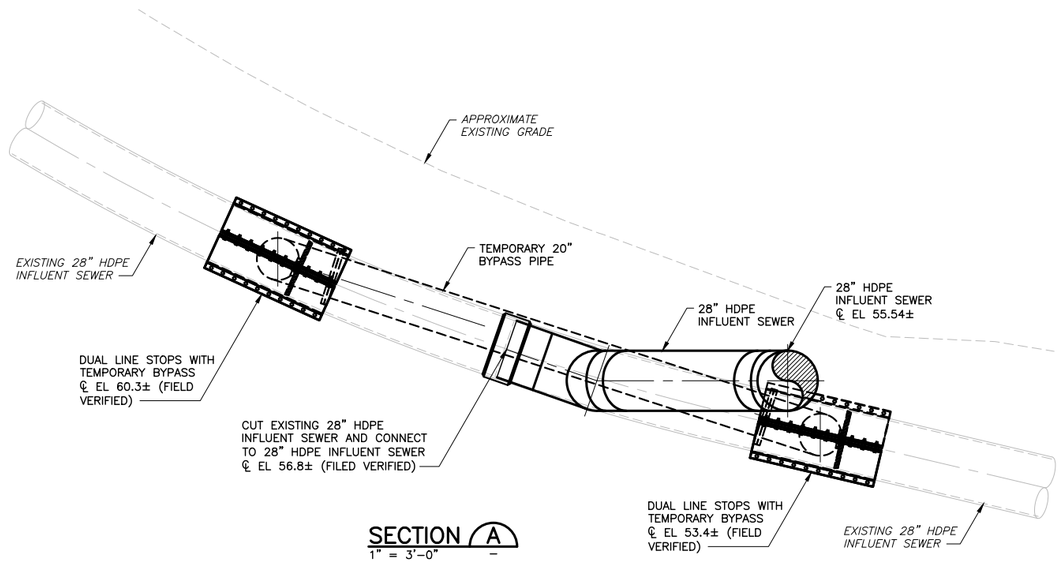

SECTION A

1" = 3'-0"

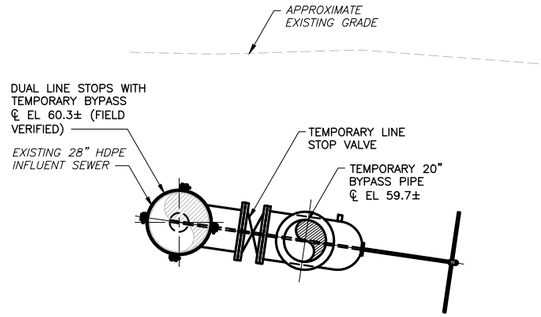

SECTION B

1" = 3'-0"

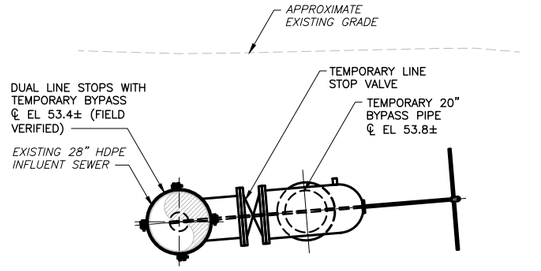

SECTION C

1" = 3'-0"

NOTES:

1. SHUTDOWNS SHALL BE PERFORMED IN ACCORDANCE WITH SECTION 01030.
2. ADDITIONAL SEQUENCING AND CONSTRAINTS ARE LISTED IN SECTION 01040.
3. TEMPORARY STOP VALVE AND LINE STOP FITTING SHALL MEET THE REQUIREMENTS OF SECTION 15200 AND SHALL REMAIN IN PLACE PER DETAIL C286. CONTRACTOR SHALL PLACE A BLIND FLANGE ON THE DOWNSTREAM SIDE OF THE FITTING.
4. ITEM SHALL BE REMOVED AFTER THE NEW 28" HDPE INFLUENT SEWER CONNECTION HAS BEEN TESTED AND ACCEPTED.
5. CONTRACTOR SHALL VERIFY LOCATION OF AND CONNECTION REQUIREMENTS FOR EXISTING UTILITIES IN THE FIELD.

REGISTERED PROFESSIONAL ENGINEER — MARK W. TAKEMOTO — No. 64369 — Exp. 06-30-17 — CIVIL — STATE OF CALIFORNIA

0" 1" — VERIFY SCALES BAR IS ONE INCH LONG ON FULL SIZE DRAWING. IF NOT ONE INCH LONG ON THIS DRAWING, ADJUST SCALES ACCORDINGLY

RMC water and environment

REV	DATE	BY	APVD	DESCRIPTION

DESIGNED	M. TAKEMOTO
DRAWN	C. TO
CHECKED	M. NAKAMOTO

SUBMITTED: MARK TAKEMOTO, RMC PROJECT ENGINEER CE-64369

APPROVED: STEVE CLARY, RMC ENGINEER CE-30318

SAUSALITO · MARIN CITY SANITARY DISTRICT

TREATMENT AND WET WEATHER FLOW UPGRADE

INFLUENT SEWER TEMPORARY BYPASS PLAN AND SECTIONS

DWG NO	C200-4
SHEET NO	51 OF 226
PROJ NO	055-006
DATE	NOVEMBER 2016

FILENAME: 0055-006-C200-2 11-11-16 10:19am CTo | XREFS: | X-SMCSD-TBLK | X-Site | MTakemoto-PE-stamp |<<--

Last Saved By: mtakemoto 10-24-16 08:50am

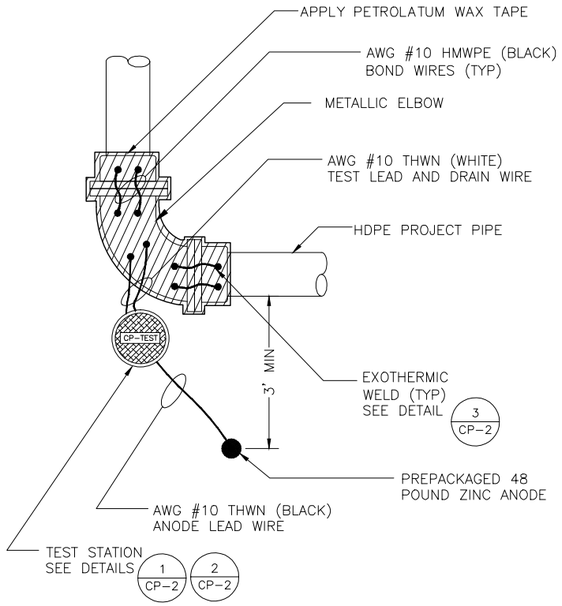

TYPICAL ANODE INSTALLATION AT ELBOW
NTS — 1 / –

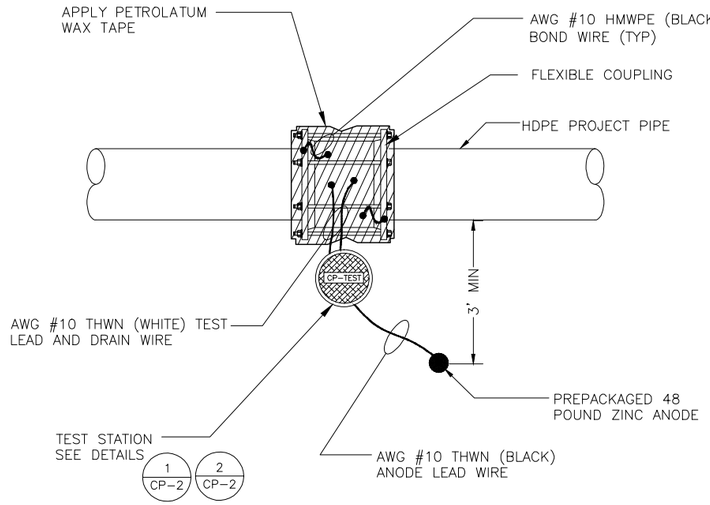

TYPICAL ANODE INSTALLATION AT FLEXIBLE COUPLING
NTS — 2 / –

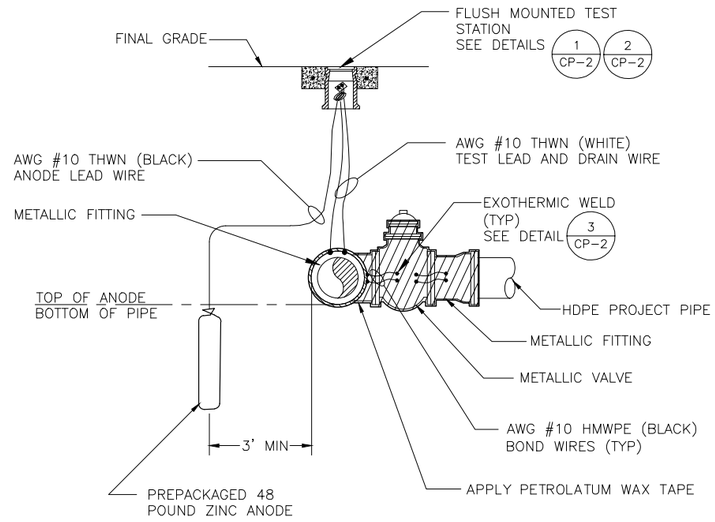

ANODE INSTALLATION AT GATE VALVE
NTS — 3 / –

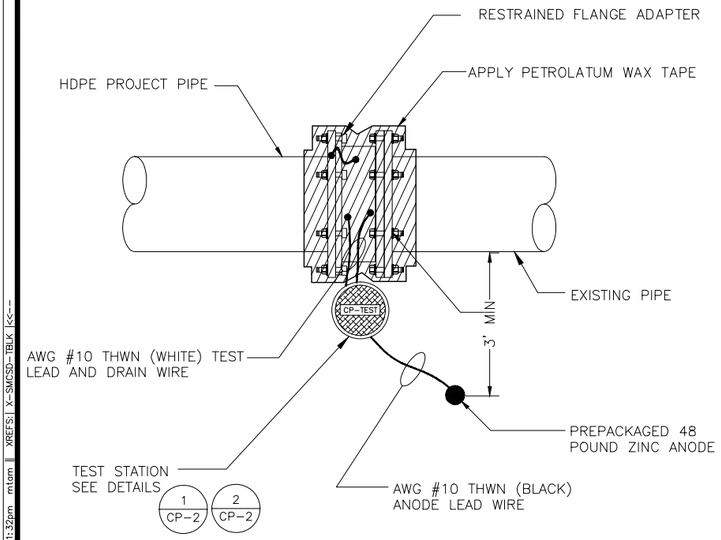

TYPICAL PETROLATUM WAX TAPE WRAP AROUND RESTRAINED FLANGE ADAPTER
NTS — 4 / –

GENERAL NOTES:

1. THESE DETAILS ARE TYPICAL. THE NUMBER, AND ARRANGEMENT OF FITTINGS AND VALVES MAY VARY. THE DETAIL THAT IS MOST SIMILAR TO THE ACTUAL ARRANGEMENT SHOULD BE USED.
2. INSTALL AN ANODE ON ALL METALLIC VALVES, FITTINGS, TEES, CROSSES, AND OTHER METALLIC APPURTENANCES AS SHOWN ON THE DRAWINGS AND INDICATED IN THE SPECIFICATIONS
3. TOP OF ANODE SHOULD BE AT THE PIPE'S INVERT DEPTH

REGISTERED PROFESSIONAL ENGINEER — GLENN H. MILLSON — NO. CR1076 — CORROSION — STATE OF CALIFORNIA

0" 1" — VERIFY SCALES — BAR IS ONE INCH LONG ON FULL SIZE DRAWING. IF NOT ONE INCH LONG ON THIS DRAWING, ADJUST SCALES ACCORDINGLY

V&A
155 Grand Avenue, Suite 700
Oakland, CA 94612
Tel. (510) 903-6600, Fax (510) 903-6601
RMC water and environment

REV	DATE	BY	APVD	DESCRIPTION
1				
2				
3				
4				
5				

DESIGNED	CIT
DRAWN	MQT
CHECKED	GHW

SUBMITTED: MARK TAKEMOTO, RMC PROJECT ENGINEER CE-64369
APPROVED: STEVE CLARY, RMC ENGINEER CE-30318

SAUSALITO · MARIN CITY SANITARY DISTRICT

TREATMENT AND WET WEATHER FLOW UPGRADE

CORROSION CONTROL DETAILS

DWG NO	CP-1
SHEET NO	52 OF 226
PROJ NO	055-006
DATE	NOVEMBER 2016

FILENAME: 13-0046 Details Corrosion 10-10-16 01:32pm mtam | XREFS: | X-SMCSD-TBLK |<<--

Last Saved By: mtam 10-10-16 01:30pm

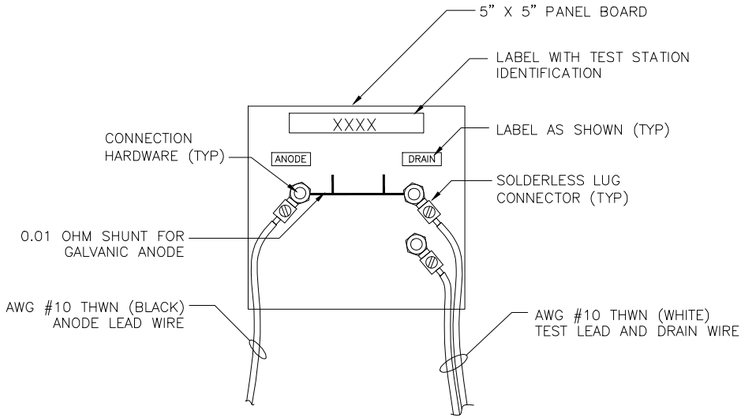

ANODE TEST STATION TEST BOARD (1)
NTS

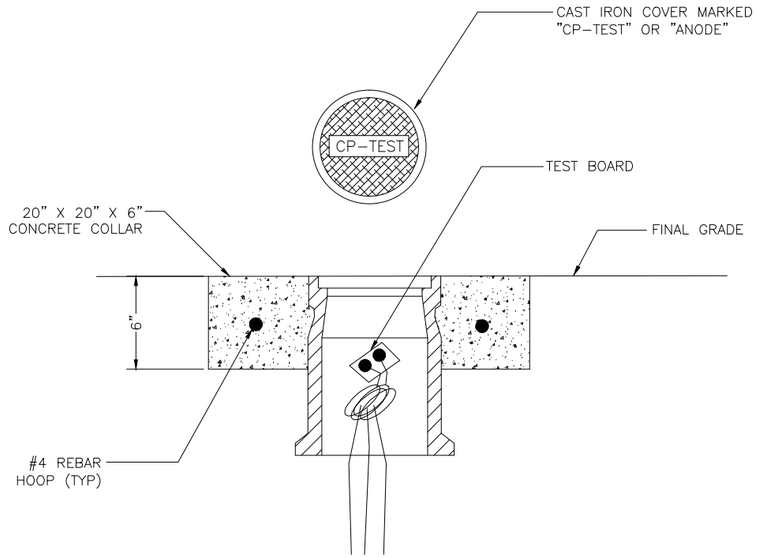

FLUSH MOUNTED TEST STATION (2)
NTS

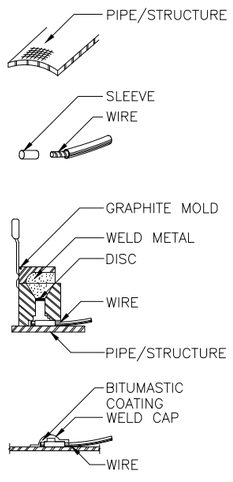

1. FILE PIPE/STRUCTURE TO BARE METAL AND CLEAN SURFACE.
2. STRIP INSULATION FROM WIRE AND ATTACH SLEEVE.
3. HOLD MOLD FIRMLY WITH OPENING AWAY FROM OPERATOR. IGNITE WITH FLINT GUN REMOVE SLAG FROM CONNECTION WITH CHIPPING HAMMER.
4. COVER CONNECTION WITH BITUMASTIC COATING OVER ALL EXPOSED METAL, PLACE WELD CAP OVER CONNECTION. REPAIR ALL DAMAGE TO COATING AND LINING IN ACCORDANCE WITH MFG RECOMMENDATIONS.

EXOTHERMIC WELD (3)
NTS

REGISTERED PROFESSIONAL ENGINEER — GLENN H. WILSON — NO. CR1076 — CORROSION — STATE OF CALIFORNIA

0" 1" — VERIFY SCALES — BAR IS ONE INCH LONG ON FULL SIZE DRAWING. IF NOT ONE INCH LONG ON THIS DRAWING, ADJUST SCALES ACCORDINGLY

V&A
155 Grand Avenue, Suite 700
Oakland, CA 94612
Tel.(510) 903-6600, Fax (510) 903-6601

RMC water and environment

REV	DATE	BY	APVD	DESCRIPTION

DESIGNED	CIT
DRAWN	MQT
CHECKED	GHW

SUBMITTED: MARK TAKEMOTO, RMC PROJECT ENGINEER CE-64369
APPROVED: STEVE CLARY, RMC ENGINEER CE-30318

SAUSALITO · MARIN CITY SANITARY DISTRICT

TREATMENT AND WET WEATHER FLOW UPGRADE

CORROSION CONTROL DETAILS

DWG NO CP-2
SHEET NO 53 OF 226
PROJ NO 055-006
DATE NOVEMBER 2016

FILENAME: 13-0046 Details Corrosion 10-10-16 01:32pm mtam | XREFS| X-SMCSD-TBLK |<<--

Last Saved By: mtam 10-10-16 01:30pm

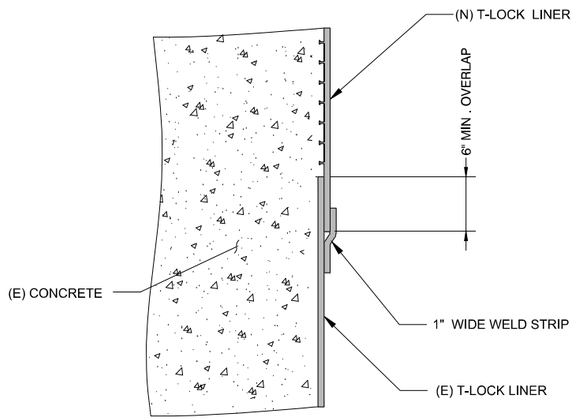

TERMINATION OF EXISTING LINER 1
NTS

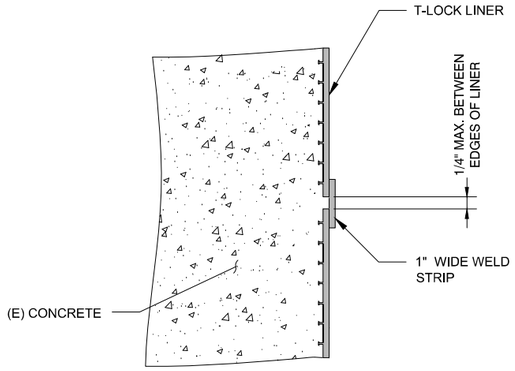

TERMINATION AT JOINT 2
NTS

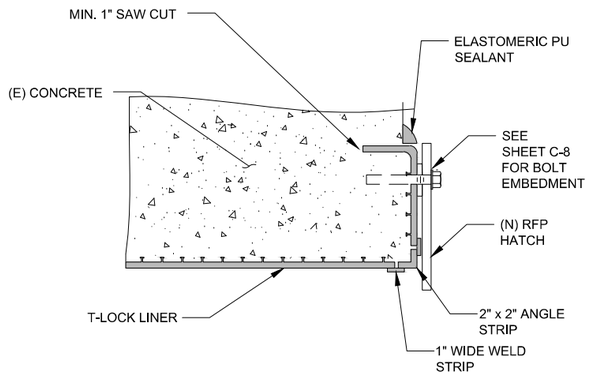

RFP HATCH TERMINATION DETAIL 3
NTS

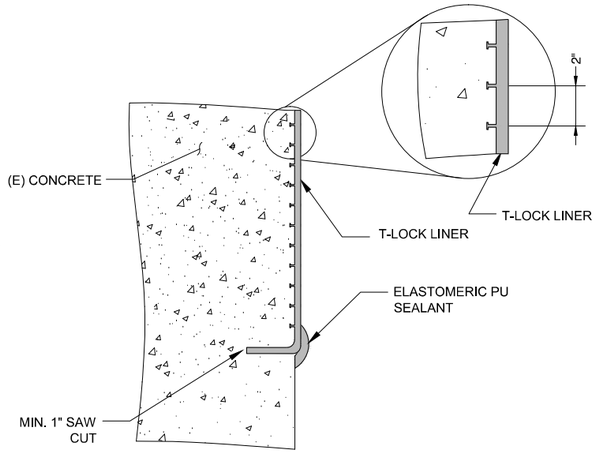

LOWER EMBEDDED TERMINATION DETAIL 4
NTS

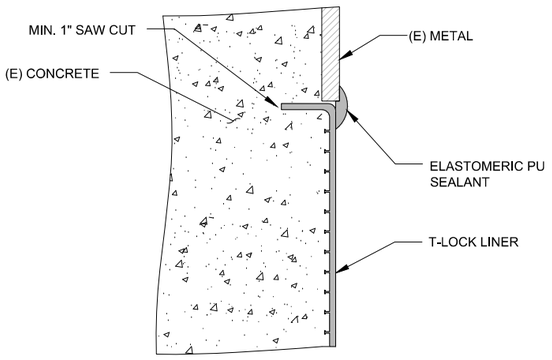

TERMINATION AT EXISTING METAL PARTS THAT CANNOT BE REMOVED 5
NTS

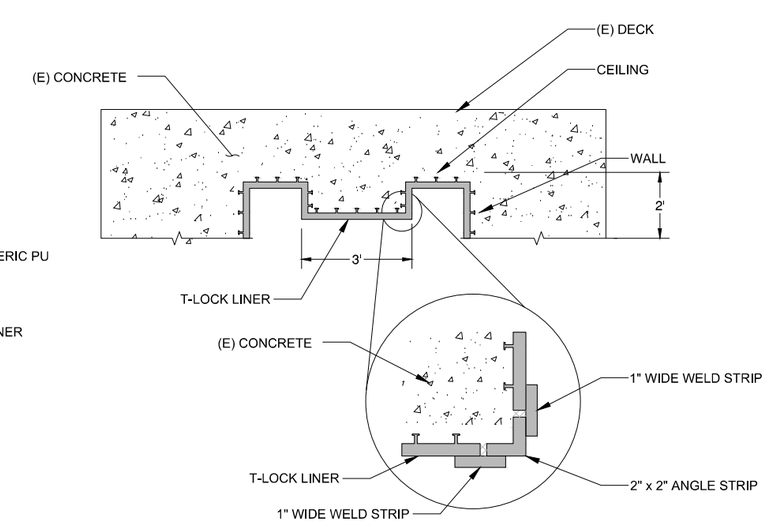

CEILING DETAIL 6
NTS

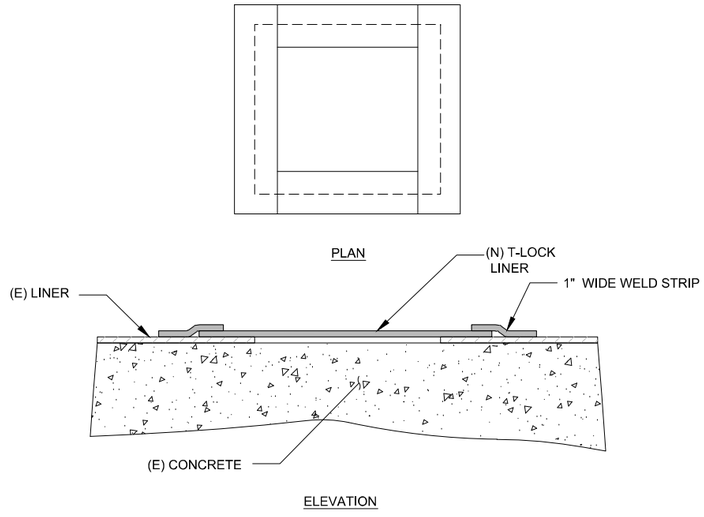

REPAIR DETAIL FOR HOLE IN LINER 7
NTS

REGISTERED PROFESSIONAL ENGINEER MANUEL NAJAR NO. 6184 CHEMICAL STATE OF CALIFORNIA

0" 1" — VERIFY SCALES — BAR IS ONE INCH LONG ON FULL SIZE DRAWING. IF NOT ONE INCH LONG ON THIS DRAWING, ADJUST SCALES ACCORDINGLY

V&A
155 Grand Avenue, Suite 700
Oakland, CA 94612
Tel. (510) 903-6600, Fax (510) 903-6601

RMC water and environment

REV	DATE	BY	APVD	DESCRIPTION

DESIGNED	MN
DRAWN	MQT
CHECKED	JLV

SUBMITTED: MARK TAKEMOTO
RMC PROJECT ENGINEER CE-64369

APPROVED: STEVE CLARY
RMC ENGINEER CE-30318

SAUSALITO · MARIN CITY SANITARY DISTRICT

TREATMENT AND WET WEATHER FLOW UPGRADE

CONCRETE REPAIR AND LINING DETAILS

DWG NO	CP-3
SHEET NO	54 OF 226
PROJ NO	055-006
DATE	NOVEMBER 2016

FILENAME: 13-0046 Coating Details 10-10-16 01:16pm mtam || XREFS:| X-SMCSD-TBLK |<<--

Last Saved By: mtam 10-10-16 01:01pm

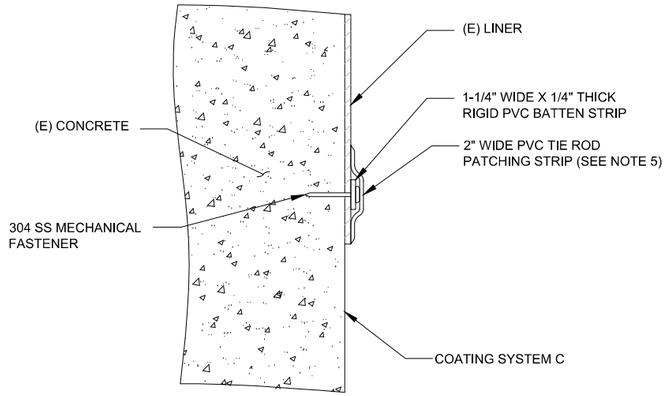

CROSS SECTION

TERMINATION OF EXISTING LINER 1
NTS

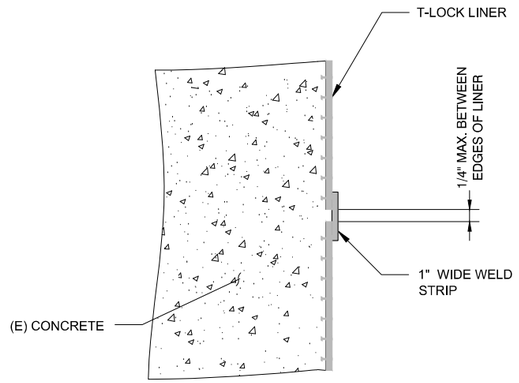

CROSS SECTION

TERMINATION AT JOINT 2
NTS

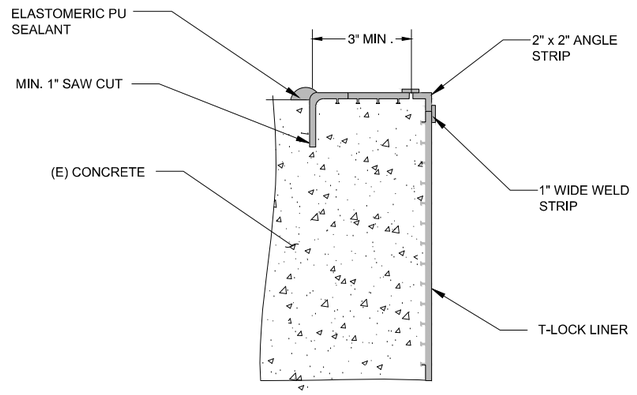

PLAN

TOP OF WALL TERMINATION DETAIL 3
NTS

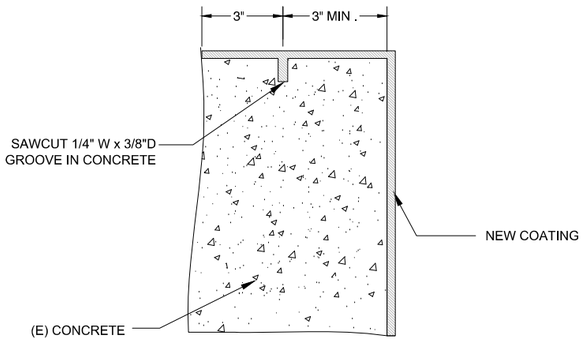

PLAN

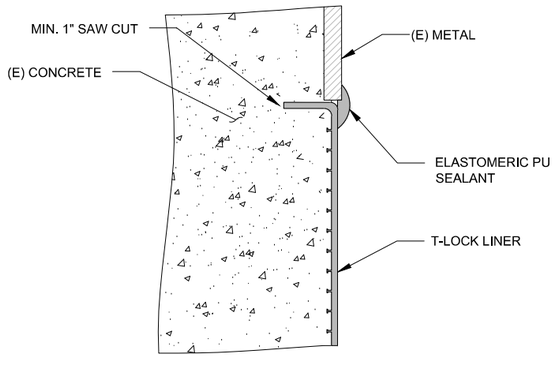

CROSS SECTION

TOP OF WALL TERMINATION DETAIL 4
NTS

TERMINATION AT EXISTING METAL PARTS THAT CANNOT BE REMOVED 5
NTS

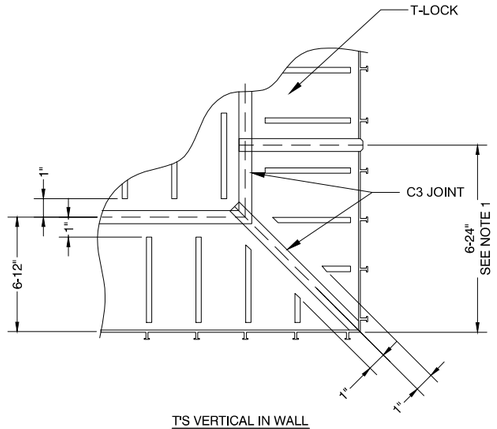

T'S VERTICAL IN WALL

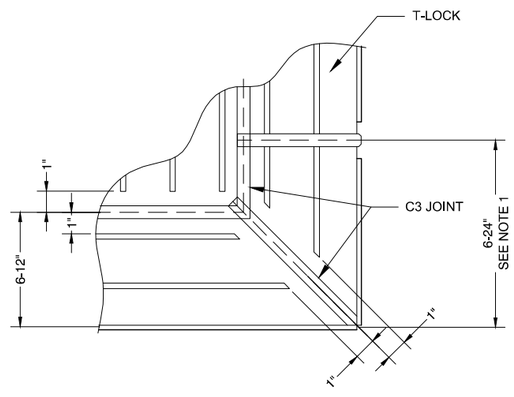

T'S HORIZONTAL IN WALL

NOTES:

1. BEND SHEETS APPROXIMATELY 6-24" AROUND CORNER OF WALL CAREFULLY NOTCH T'S AS REQUIRED TO BEND.
2. PLACE NAILS WITHIN 1/4" OF SHEET EDGES.

T-LOCK CORNER DETAIL 6
NTS

REGISTERED PROFESSIONAL ENGINEER MANUEL NAJAR NO. 6184 CHEMICAL STATE OF CALIFORNIA

0" 1" — VERIFY SCALES — BAR IS ONE INCH LONG ON FULL SIZE DRAWING. IF NOT ONE INCH LONG ON THIS DRAWING, ADJUST SCALES ACCORDINGLY

V&A
155 Grand Avenue, Suite 700
Oakland, CA 94612
Tel. (510) 903-6600, Fax (510) 903-6601

RMC water and environment

REV	DATE	BY	APVD	DESCRIPTION
1				
2				
3				
4				
5				

DESIGNED	MN
DRAWN	MQT
CHECKED	JLV

SUBMITTED: MARK TAKEMOTO, RMC PROJECT ENGINEER CE-64369

APPROVED: STEVE CLARY, RMC ENGINEER CE-30318

SAUSALITO · MARIN CITY SANITARY DISTRICT

TREATMENT AND WET WEATHER FLOW UPGRADE

CONCRETE REPAIR AND LINING DETAILS

DWG NO	CP-4
SHEET NO	55 OF 226
PROJ NO	055-006
DATE	NOVEMBER 2016

FILENAME: 13-0046 Coating Details 10-10-16 01:15pm mtam || XREFS: || X-SMCSD-TBLK |<c--

Last Saved By: mtam 10-10-16 01:01pm

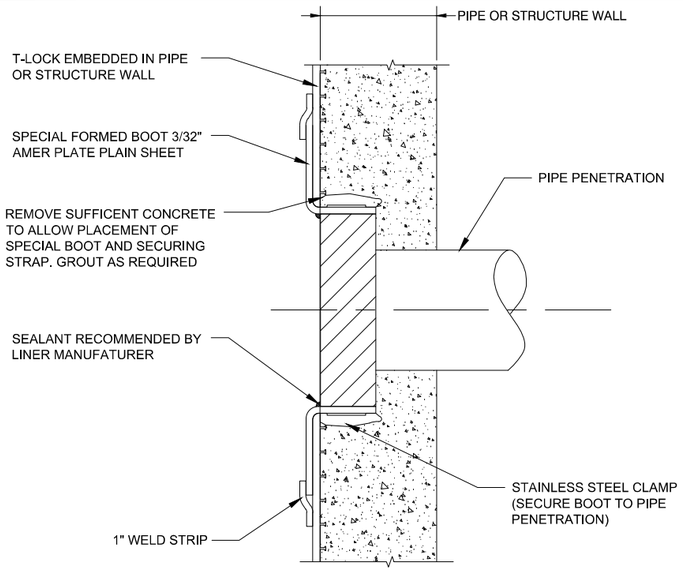

DETAIL A

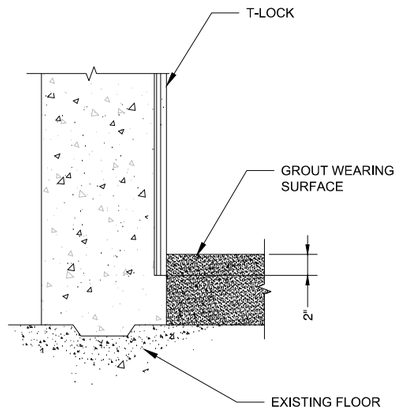

DETAIL B

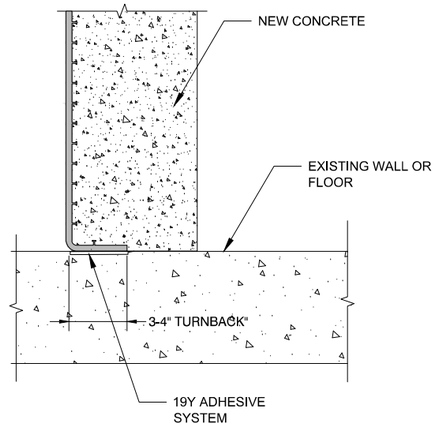

DETAIL C

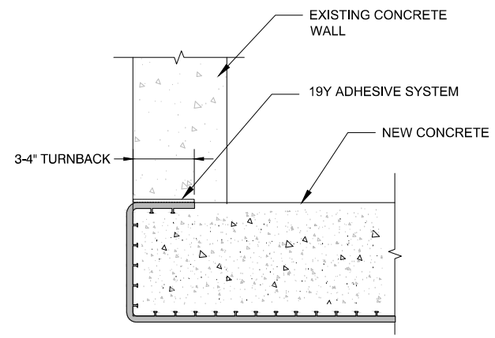

SEALING FLANGE PENETRATIONS THRU T-LOCK LINED WALL

1 / -

NTS

TERMINATION OF T-LOCK AT EXISTING CONCRETE WALL OR UNLINED FLOOR

2 / -

NTS

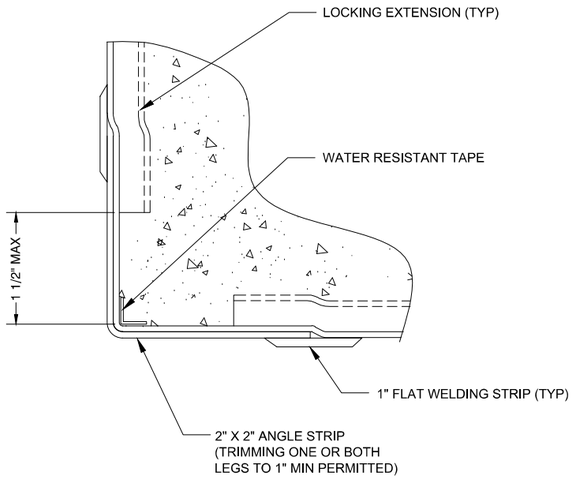

DETAIL A

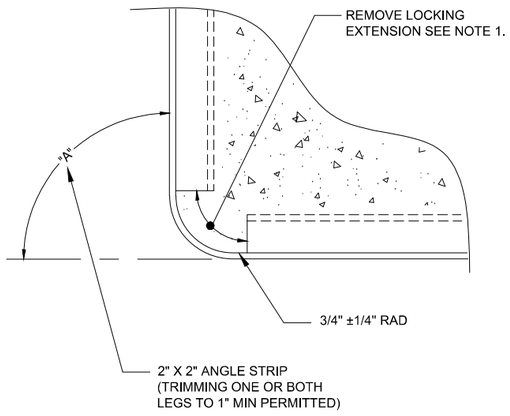

DETAIL B

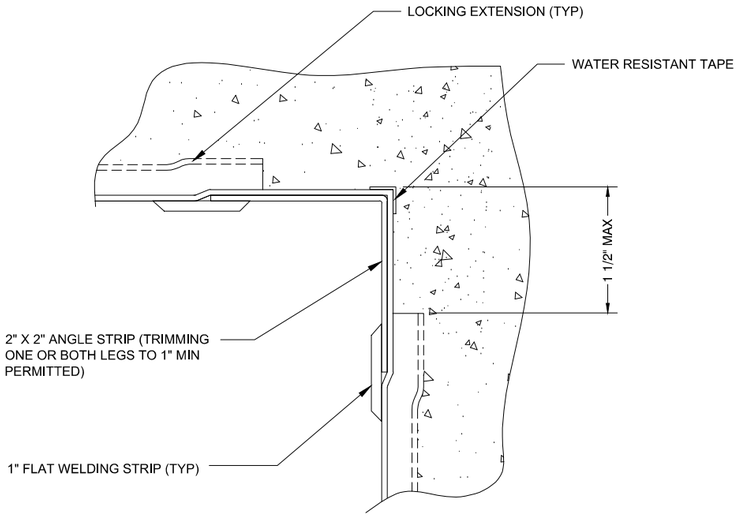

DETAIL C

NOTES:

1. THE LOCKING EXTENSIONS SHALL BE REMOVED TO WITHIN 1/32" OF THE FACE OF THE MAIN SHEET.
2. SHEET MUST BE ABOVE 50°F TO PERMIT BENDING AND HIGHER TEMPERATURES ARE RECOMMENED TO IMPROVE HANDLING

AMER-PLATE CORNER DETAIL

2 / -

NTS

REGISTERED PROFESSIONAL ENGINEER MANUEL NAJARRO NO. 6184 CHEMICAL STATE OF CALIFORNIA

0" 1" — VERIFY SCALES — BAR IS ONE INCH LONG ON FULL SIZE DRAWING. IF NOT ONE INCH LONG ON THIS DRAWING, ADJUST SCALES ACCORDINGLY

V&A
155 Grand Avenue, Suite 700
Oakland, CA 94612
Tel. (510) 903-6600, Fax (510) 903-6601

RMC water and environment

REV	DATE	BY	APVD	DESCRIPTION
1				
2				
3				
4				
5				

DESIGNED	MN
DRAWN	MQT
CHECKED	JLV

SUBMITTED: MARK TAKEMOTO, RMC PROJECT ENGINEER CE-64369

APPROVED: STEVE CLARY, RMC ENGINEER CE-30318

SAUSALITO · MARIN CITY SANITARY DISTRICT

TREATMENT AND WET WEATHER FLOW UPGRADE

CONCRETE REPAIR AND LINING DETAILS

DWG NO	CP-5
SHEET NO	56 OF 226
PROJ NO	055-006
DATE	NOVEMBER 2016

FILENAME: 13-0046 Coating Details 10-10-16 01:15pm mtam || XREFS:| X-SMCSD-TBLK |<<--

Last Saved By: mtam 10-10-16 01:01pm

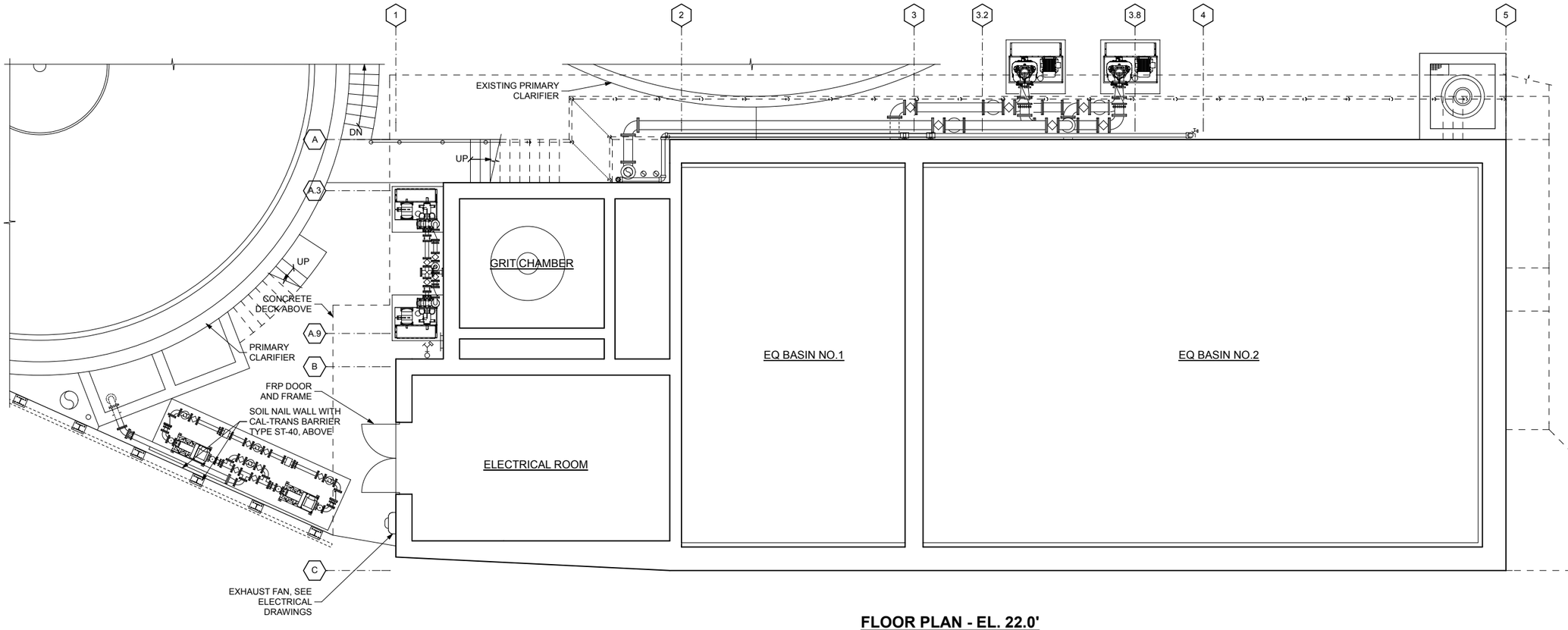

FLOOR PLAN - EL. 22.0'

3/16" = 1'-0"

NOTE:
SEE STRUCTURAL AND MECHANICAL DRAWINGS FOR ADDITIONAL INFORMATION.

LICENSED ARCHITECT
KAREN BURKS
NO. C-12893
EXP. 10/31/17
ARCHITECT
STATE OF CALIFORNIA

0" — 1"
VERIFY SCALES
BAR IS ONE INCH LONG ON FULL SIZE DRAWING. IF NOT ONE INCH LONG ON THIS DRAWING, ADJUST SCALES ACCORDINGLY

BurksToma Architects

RMC Water and Environment

REV	DATE	BY	APVD	DESCRIPTION

DESIGNED	K. BURKS
DRAWN	M. GILROY
CHECKED	K. BURKS

SUBMITTED: MARK TAKEMOTO
RMC PROJECT ENGINEER CE-64369

APPROVED: STEVE CLARY
RMC ENGINEER CE-30318

SAUSALITO • MARIN CITY SANITARY DISTRICT

SAUSALITO - MARIN CITY SANITARY DISTRICT

HEADWORK/GRIT AND EQ BASIN
ARCHITECTURAL FLOOR PLAN

DWG NO	A100-1
SHEET NO	57 OF 226
PROJ NO	055-006
DATE	NOVEMBER 2016

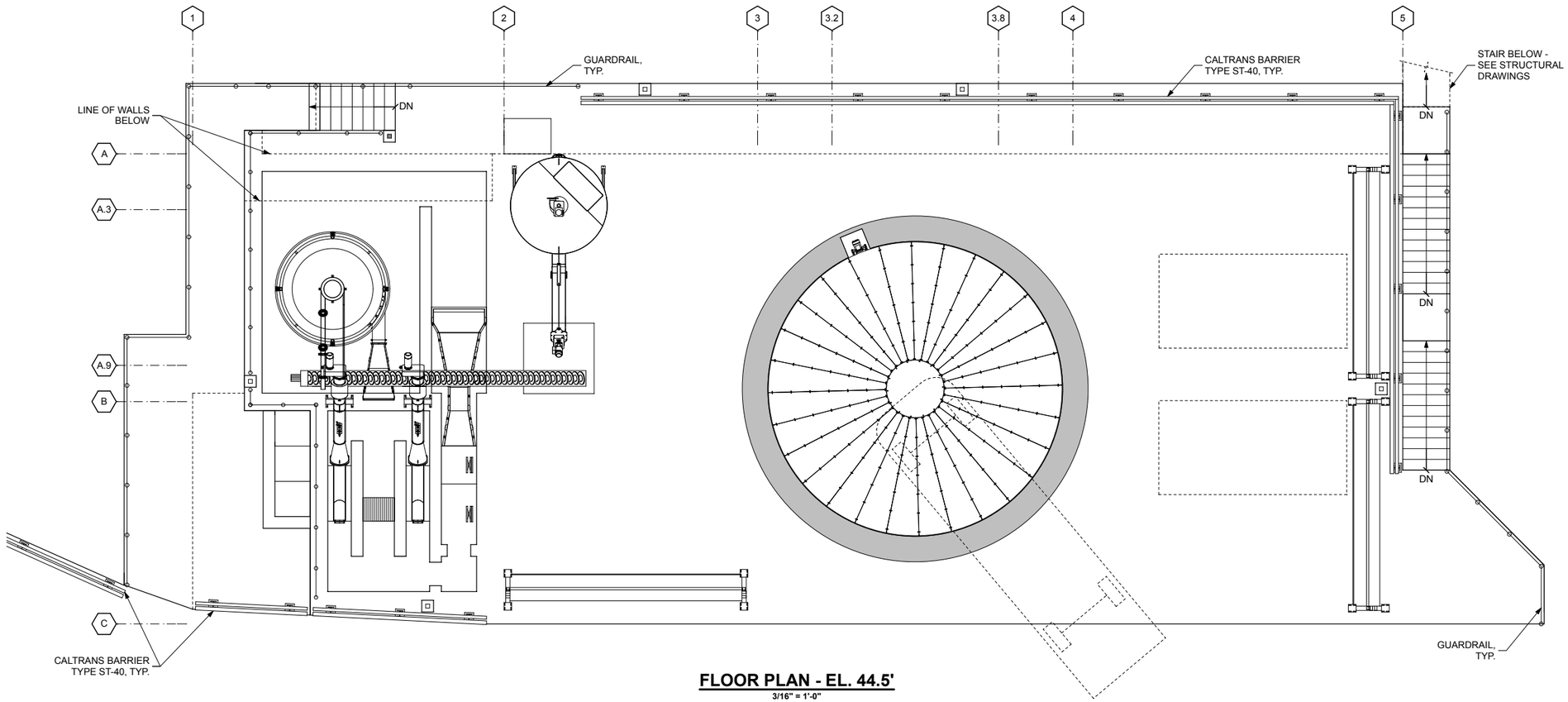

FLOOR PLAN - EL. 44.5'

3/16" = 1'-0"

NOTE:
SEE STRUCTURAL AND MECHANICAL DRAWINGS FOR ADDITIONAL INFORMATION.

LICENSED ARCHITECT KAREN BURKS NO. C-12893 EXP. 10/31/17 ARCHITECT STATE OF CALIFORNIA

0" 1" — VERIFY SCALES — BAR IS ONE INCH LONG ON FULL SIZE DRAWING. IF NOT ONE INCH LONG ON THIS DRAWING, ADJUST SCALES ACCORDINGLY

Burks Toma Architects

RMC Water and Environment

REV	DATE	BY	APVD	DESCRIPTION

DESIGNED K. BURKS
DRAWN M. GILROY
CHECKED K. BURKS

SUBMITTED: MARK TAKEMOTO, RMC PROJECT ENGINEER CE-64369
APPROVED: STEVE CLARY, RMC ENGINEER CE-30318

SAUSALITO - MARIN CITY SANITARY DISTRICT

HEADWORK/GRIT AND EQ BASIN
ARCHITECTURAL FLOOR PLAN

DWG NO A100-2
SHEET NO 58 OF 226
PROJ NO 055-006
DATE NOVEMBER 2016

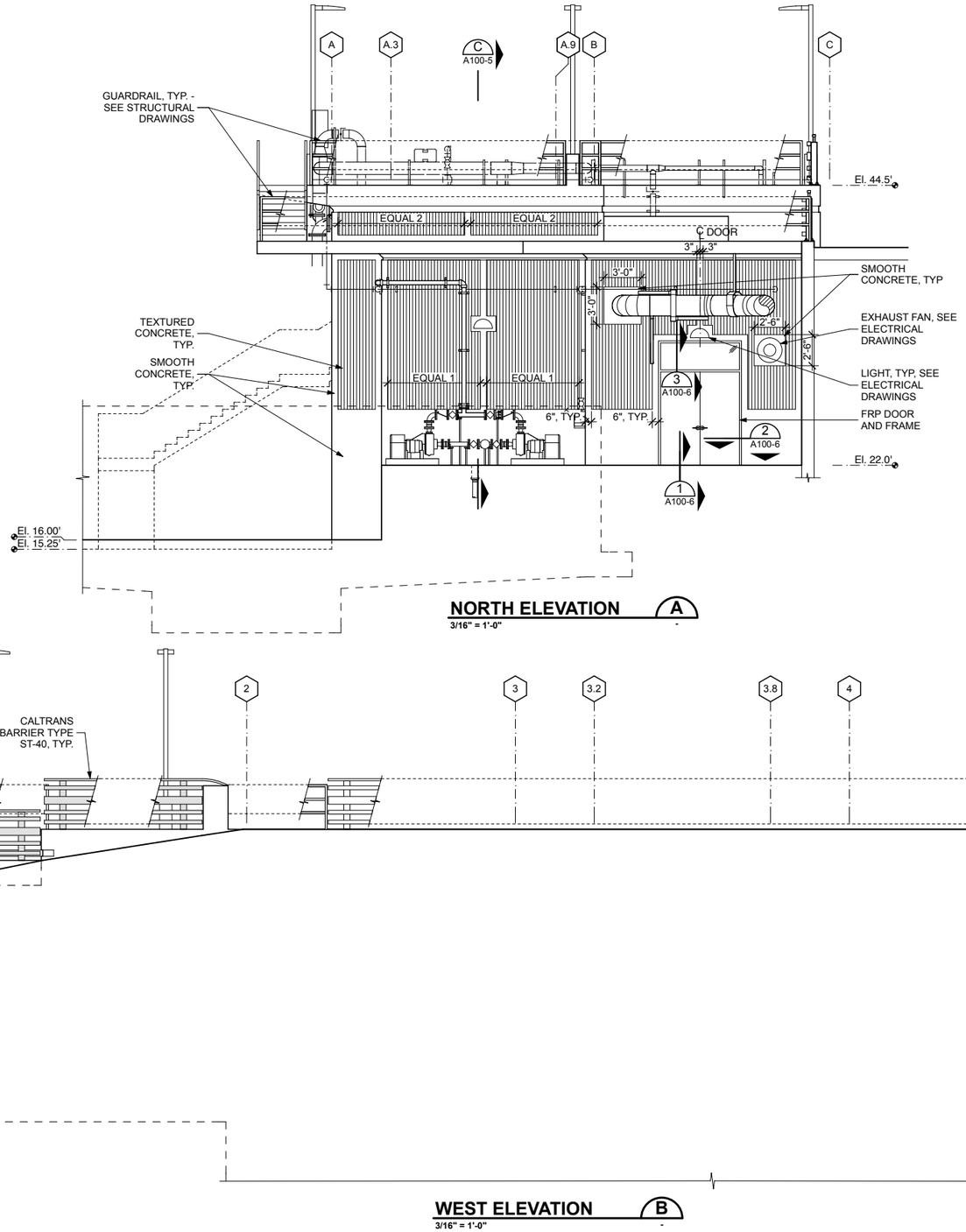

NORTH ELEVATION A

3/16" = 1'-0"

WEST ELEVATION B

3/16" = 1'-0"

NOTE:
SEE STRUCTURAL AND MECHANICAL DRAWINGS FOR ADDITIONAL INFORMATION.

LICENSED ARCHITECT
KAREN BURKS
NO. C-12893
EXP. 10/31/17
ARCHITECT
STATE OF CALIFORNIA

0" 1"
VERIFY SCALES
BAR IS ONE INCH LONG ON FULL SIZE DRAWING. IF NOT ONE INCH LONG ON THIS DRAWING, ADJUST SCALES ACCORDINGLY

BurksToma Architects

RMC Water and Environment

REV	DATE	BY	APVD	DESCRIPTION

DESIGNED K. BURKS
DRAWN M. GILROY
CHECKED K. BURKS

SUBMITTED: MARK TAKEMOTO
RMC PROJECT ENGINEER CE-64369

APPROVED: STEVE CLARY
RMC ENGINEER CE-30318

SAUSALITO - MARIN CITY SANITARY DISTRICT

HEADWORK/GRIT AND EQ BASIN ARCHITECTURAL ELEVATIONS

DWG NO A100-3
SHEET NO 59 OF 226
PROJ NO 055-006
DATE NOVEMBER 2016

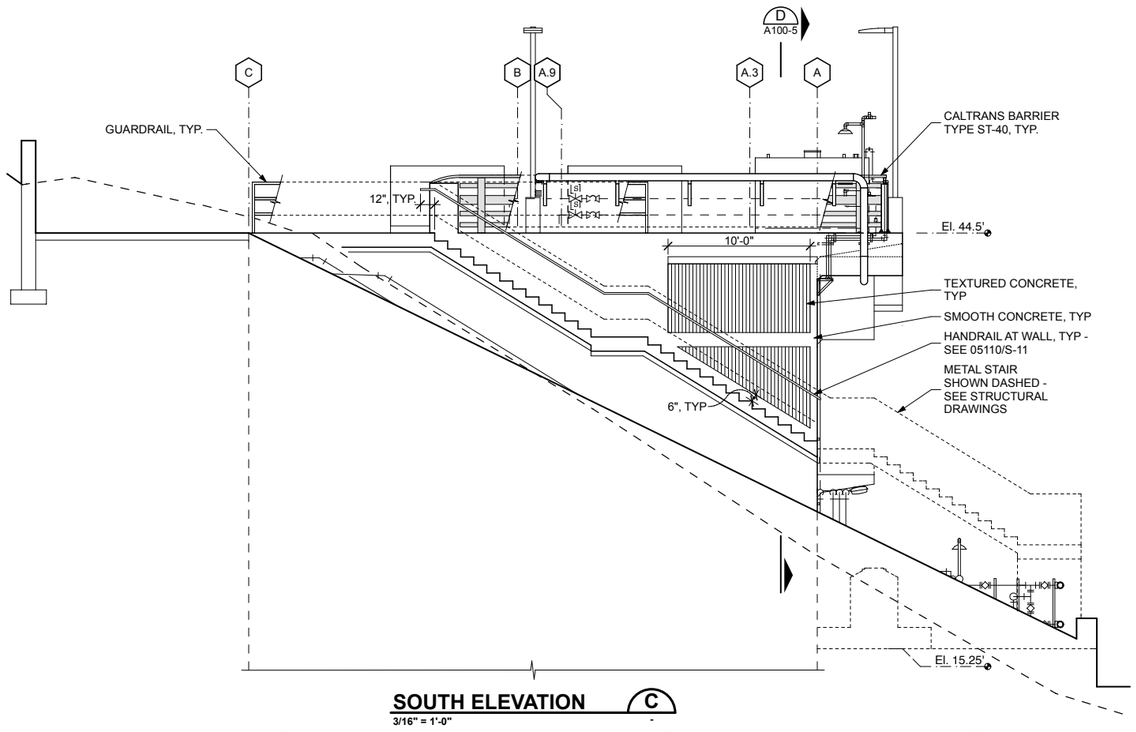

SOUTH ELEVATION C

3/16" = 1'-0"

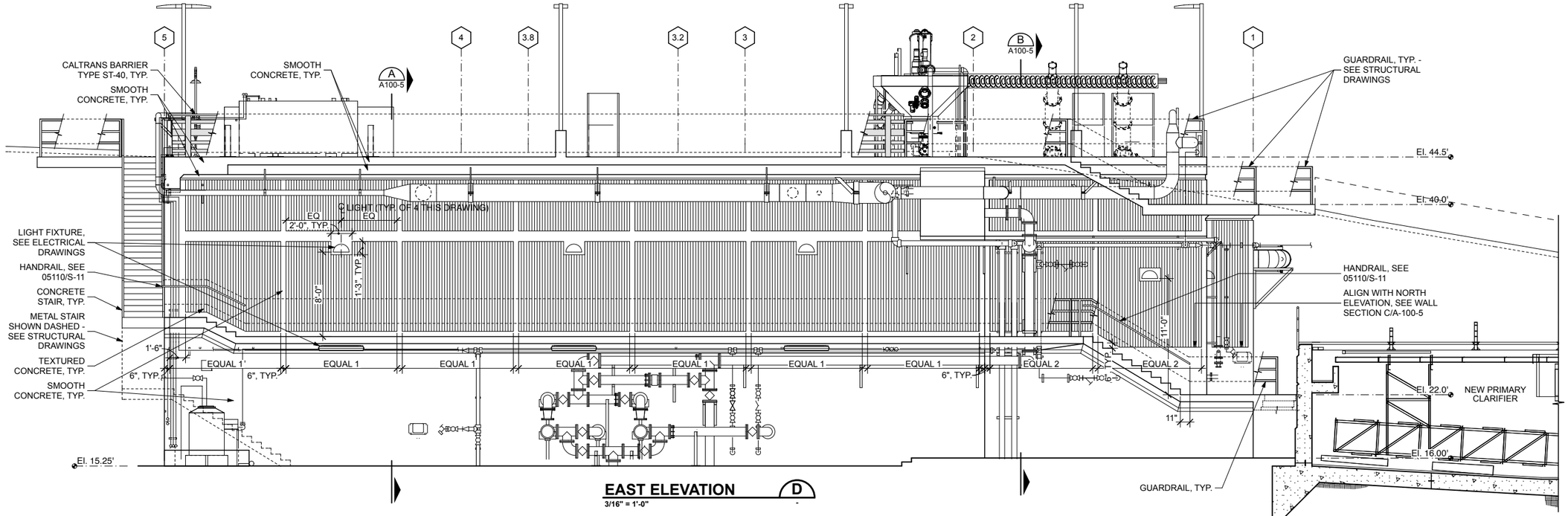

EAST ELEVATION D

3/16" = 1'-0"

NOTE:
SEE STRUCTURAL AND MECHANICAL DRAWINGS FOR ADDITIONAL INFORMATION.

LICENSED ARCHITECT
KAREN BURKS
NO. C-12893
EXP. 10/31/17
ARCHITECT
STATE OF CALIFORNIA

0" 1"
VERIFY SCALES
BAR IS ONE INCH
LONG ON FULL
SIZE DRAWING.
IF NOT ONE INCH
LONG ON THIS
DRAWING, ADJUST
SCALES ACCORDINGLY

Burks Toma
Architects

RMC
Water and Environment

REV	DATE	BY	APVD	DESCRIPTION

DESIGNED	K. BURKS
DRAWN	M. GILROY
CHECKED	K. BURKS

SUBMITTED: MARK TAKEMOTO
RMC PROJECT ENGINEER CE-64369

APPROVED: STEVE CLARY
RMC ENGINEER CE-30318

SAUSALITO • MARIN CITY SANITARY DISTRICT

SAUSALITO - MARIN CITY SANITARY DISTRICT

HEADWORK/GRIT AND EQ BASIN ARCHITECTURAL ELEVATIONS

DWG NO	A100-4
SHEET NO	60 OF 226
PROJ NO	055-006
DATE	NOVEMBER 2016

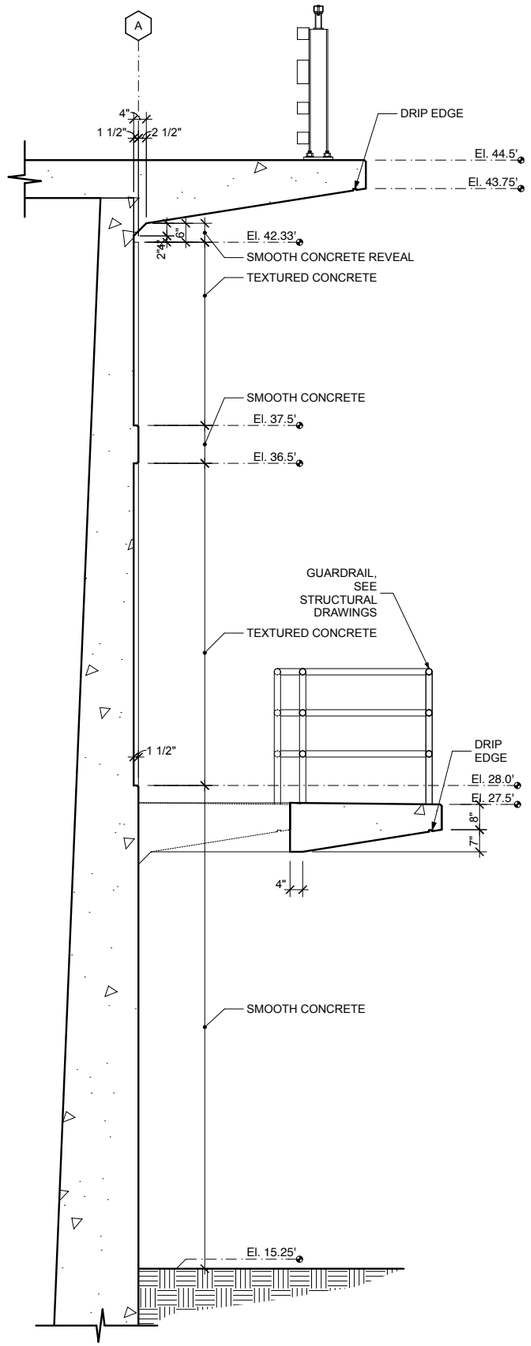

WALL SECTION A

1/2" = 1'-0"

A100-4

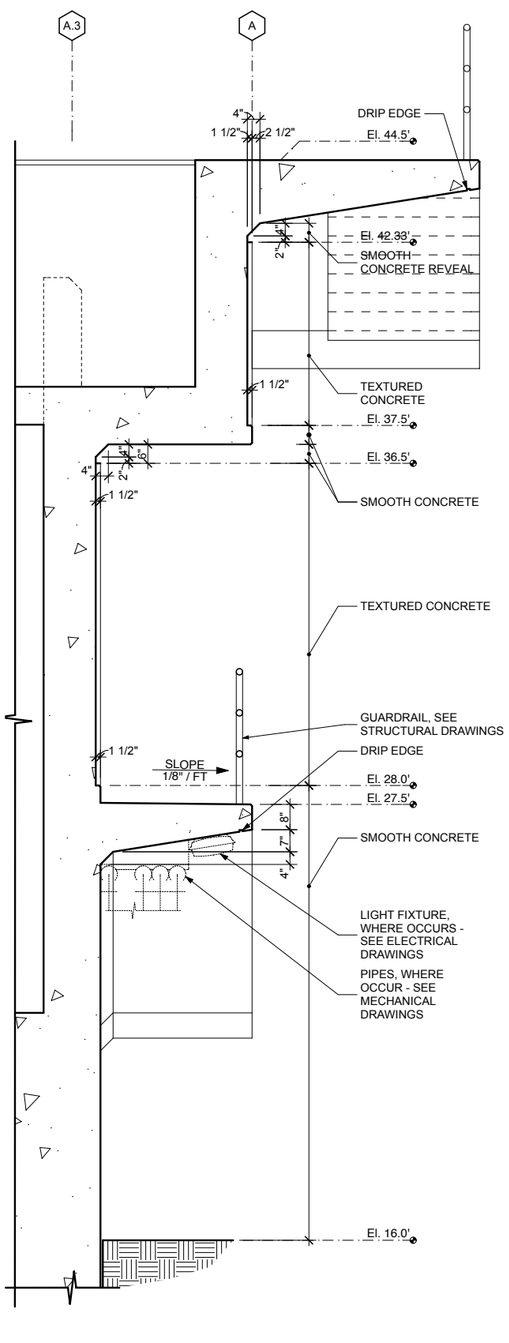

WALL SECTION B

1/2" = 1'-0"

A100-4

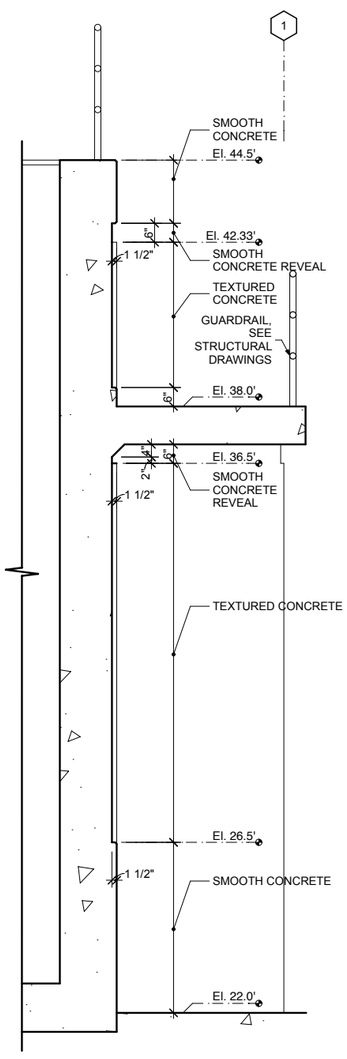

WALL SECTION C

1/2" = 1'-0"

A100-3

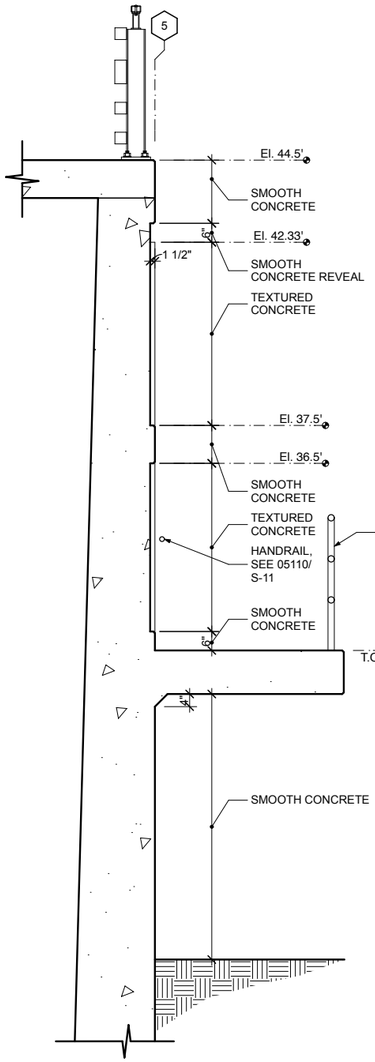

WALL SECTION D

1/2" = 1'-0"

A100-4

NOTE:
SEE STRUCTURAL AND MECHANICAL DRAWINGS FOR ADDITIONAL INFORMATION.

LICENSED ARCHITECT
KAREN BURKS
NO. C-12893
EXP. 10/31/17
ARCHITECT
STATE OF CALIFORNIA

0" 1"
VERIFY SCALES
BAR IS ONE INCH LONG ON FULL SIZE DRAWING. IF NOT ONE INCH LONG ON THIS DRAWING, ADJUST SCALES ACCORDINGLY

Burks Toma Architects

RMC Water and Environment

REV	DATE	BY	APVD	DESCRIPTION

DESIGNED	K. BURKS
DRAWN	M. GILROY
CHECKED	K. BURKS

SUBMITTED: MARK TAKEMOTO
RMC PROJECT ENGINEER CE-64369

APPROVED: STEVE CLARY
RMC ENGINEER CE-30318

SAUSALITO - MARIN CITY SANITARY DISTRICT

HEADWORK/GRIT AND EQ BASIN SECTIONS AND DETAILS

DWG NO	A100-5
SHEET NO	61 OF 226
PROJ NO	055-006
DATE	NOVEMBER 2016

DOOR SCHEDULE

NOTE: ALL DOORS AND WINDOWS SHALL BE OPERABLE FROM THE INSIDE WITHOUT USE OF A KEY OR SPECIAL KNOWLEDGE OR EFFORT PER CBC SECTION 1008.1.8

FRP = FIBERGLASS REINFORCED PLASTIC ALUM = ALUMINUM EXIT = EXIT DEVICE FAC = FACTORY FINISH INS = INSULATED PTD = PAINTED SGL = SINGLE STL = STEEL TEMP = TEMPERED WC = PRIVACY SHADES

NO.	DOOR						FRAME					DETAILS			DOOR HARDWARE		GLAZING	REMARKS	NO.
	WIDTH	HEIGHT	THICK	TYPE	MAT'L	FINISH	WIDTH	HEIGHT	DEPTH	MAT'L	FINISH	HEAD	JAMB	THRESHOLD	GROUP	TYPE			
-	(2)3'-2"	7'-6"	1 3/4"	A	FRP	FAC	6'-8"	10'-0"	6"	FRP	FAC	3/A100-6	2/A100-6	1/A100-6	1	LEVER	INS	1), 2), 3)	-
-	2'-8"	6'-10"	1 3/4"	B	FRP	FAC	3'-0"	7'-0"	6"	FRP	FAC	-	-	-	2	LEVER	INS	1), 2), 3), 4)	-

1) REQUIRED EXIT DOOR.
2) ALL GLAZING TO BE TEMPERED AS INDICATED BY 'T'.
3) DOOR AND FRAME DIMENSIONS ARE NOMINAL, V.I.F.
4) NEW DOOR AND FRAME IN EXISTING OPENING ON SOUTH END OF EAST ELEVATION AT CONTROL BUILDING.

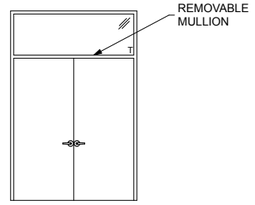

A

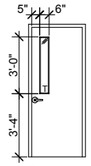

B

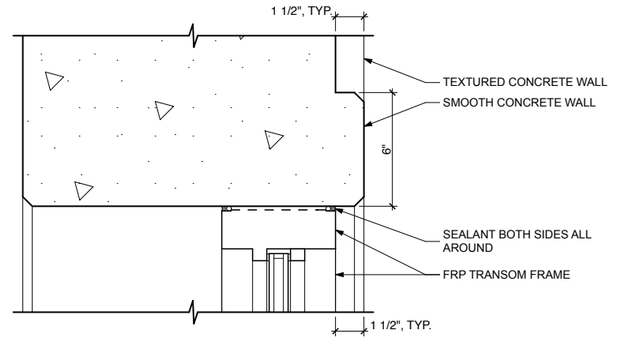

FRP DOOR - HEAD 3 A100-3
1/2" = 1'-0"

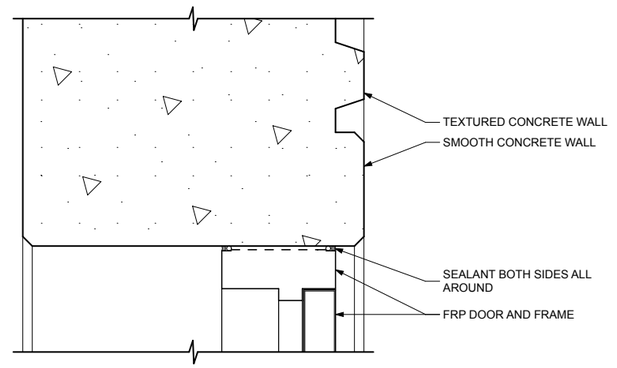

FRP DOOR - JAMB 2 A100-3
1/2" = 1'-0"

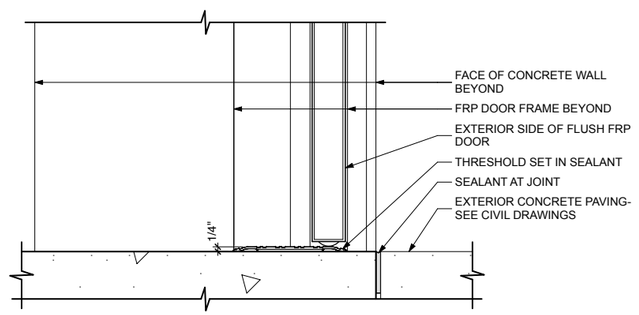

FRP DOOR - THRESHOLD 1 A100-3
1/2" = 1'-0"

NOTE:
SEE STRUCTURAL AND MECHANICAL DRAWINGS FOR ADDITIONAL INFORMATION.

LICENSED ARCHITECT KAREN BURKS NO. C-12893 EXP. 10/31/17 ARCHITECT STATE OF CALIFORNIA

0" — 1" VERIFY SCALES BAR IS ONE INCH LONG ON FULL SIZE DRAWING. IF NOT ONE INCH LONG ON THIS DRAWING, ADJUST SCALES ACCORDINGLY

Burks Toma Architects

RMC Water and Environment

REV	DATE	BY	APVD	DESCRIPTION

DESIGNED K. BURKS
DRAWN M. GILROY
CHECKED K. BURKS

SUBMITTED: MARK TAKEMOTO, RMC PROJECT ENGINEER CE-64369
APPROVED: STEVE CLARY, RMC ENGINEER CE-30318

SAUSALITO - MARIN CITY SANITARY DISTRICT

HEADWORK/GRIT AND EQ BASIN SCHEDULES AND DETAILS

DWG NO A100-6
SHEET NO 62 OF 226
PROJ NO 055-006
DATE NOVEMBER 2016

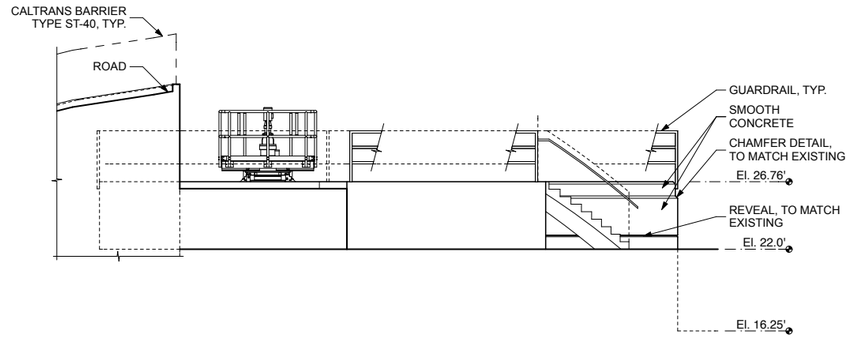

WEST ELEVATION A
3/16" = 1'-0"

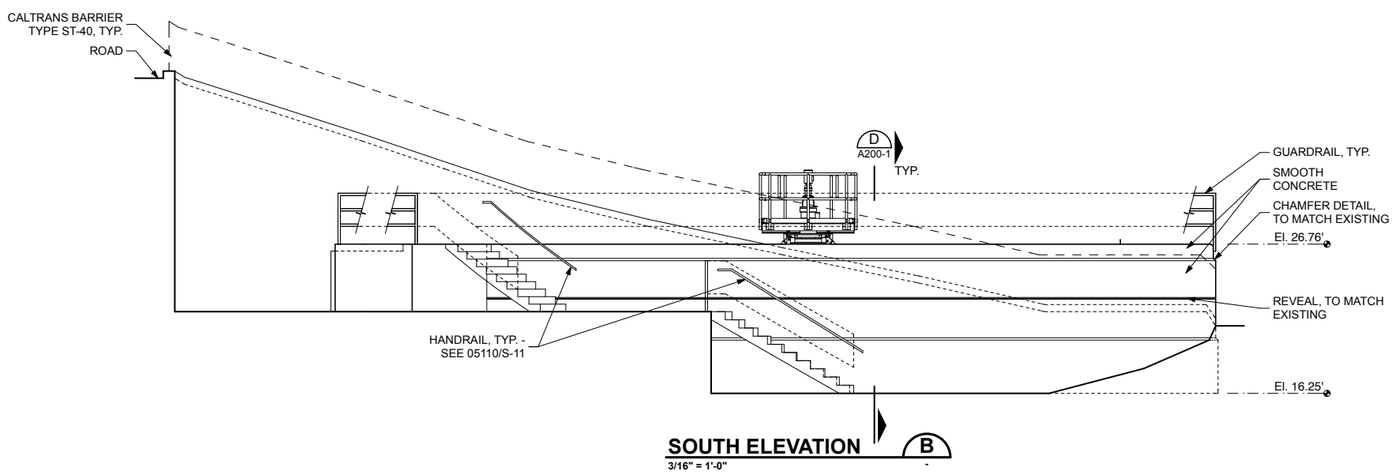

SOUTH ELEVATION B
3/16" = 1'-0"

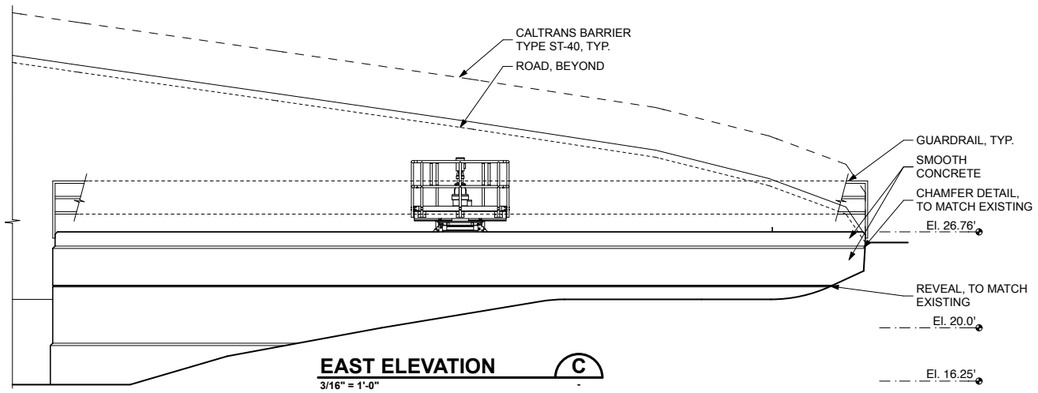

EAST ELEVATION C
3/16" = 1'-0"

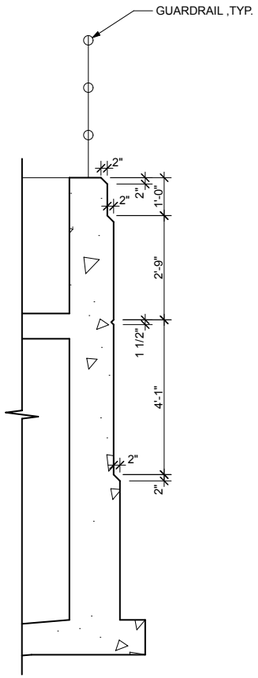

WALL SECTION D
1/2" = 1'-0"
A200-1

NOTE:
SEE STRUCTURAL AND MECHANICAL DRAWINGS FOR ADDITIONAL INFORMATION.

LICENSED ARCHITECT
KAREN BURKS
NO. C-12893
EXP. 10/31/17
ARCHITECT
STATE OF CALIFORNIA

0" 1"
VERIFY SCALES
BAR IS ONE INCH LONG ON FULL SIZE DRAWING. IF NOT ONE INCH LONG ON THIS DRAWING, ADJUST SCALES ACCORDINGLY

Burks Toma Architects

RMC Water and Environment

REV	DATE	BY	APVD	DESCRIPTION

DESIGNED K. BURKS
DRAWN M. GILROY
CHECKED K. BURKS

SUBMITTED: MARK TAKEMOTO
RMC PROJECT ENGINEER CE-64369

APPROVED: STEVE CLARY
RMC ENGINEER CE-30318

SAUSALITO · MARIN CITY SANITARY DISTRICT

SAUSALITO - MARIN CITY SANITARY DISTRICT

PRIMARY CLARIFIER ARCHITECTURAL ELEVATIONS

DWG NO A200-1
SHEET NO 63 OF 226
PROJ NO 055-006
DATE NOVEMBER 2016

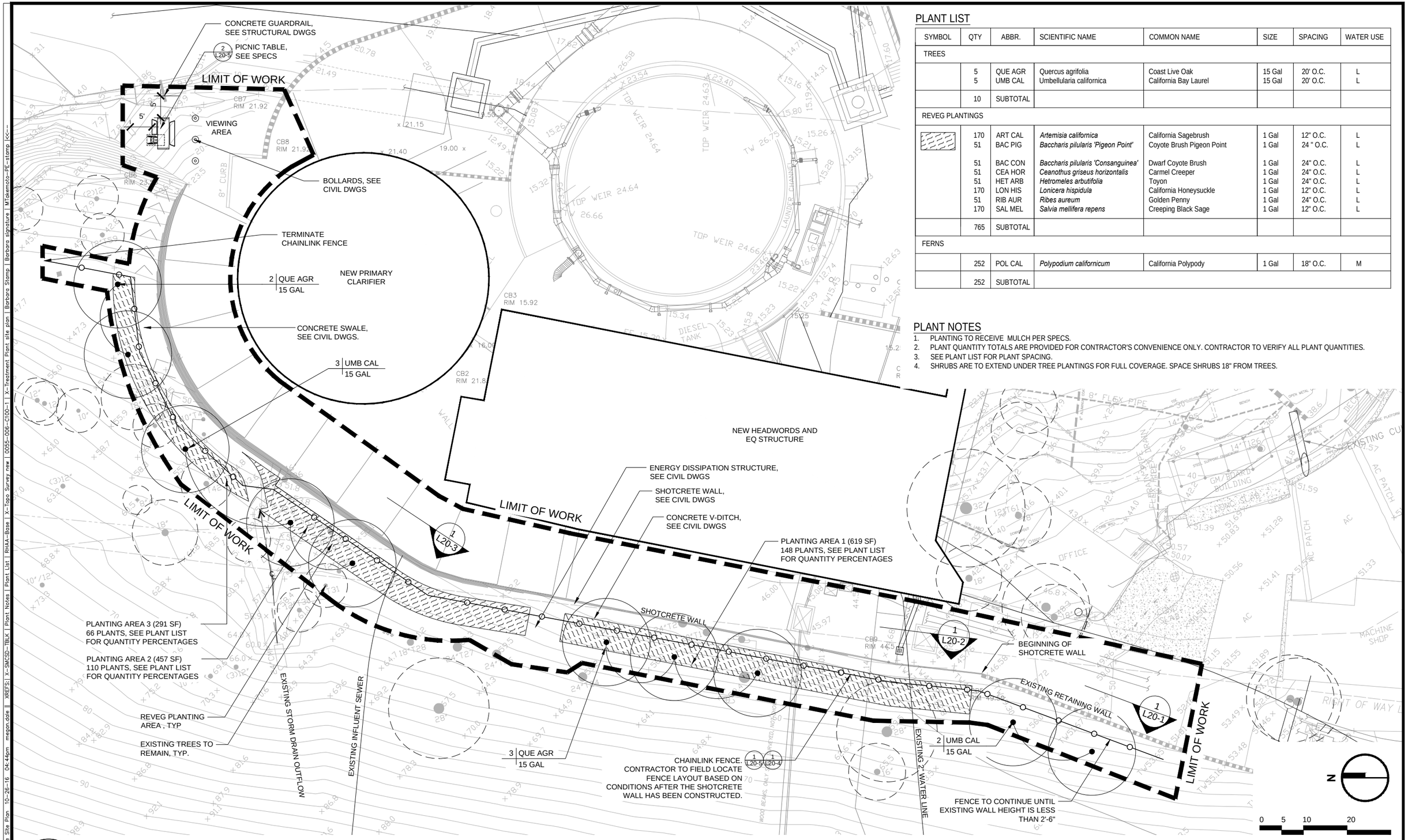

PLANT LIST

SYMBOL	QTY	ABBR.	SCIENTIFIC NAME	COMMON NAME	SIZE	SPACING	WATER USE
TREES							
	5	QUE AGR	Quercus agrifolia	Coast Live Oak	15 Gal	20' O.C.	L
	5	UMB CAL	Umbellularia californica	California Bay Laurel	15 Gal	20' O.C.	L
	10	SUBTOTAL					
REVEG PLANTINGS							
	170	ART CAL	*Artemisia californica*	California Sagebrush	1 Gal	12" O.C.	L
	51	BAC PIG	*Baccharis pilularis 'Pigeon Point'*	Coyote Brush Pigeon Point	1 Gal	24 " O.C.	L
	51	BAC CON	*Baccharis pilularis 'Consanguinea'*	Dwarf Coyote Brush	1 Gal	24" O.C.	L
	51	CEA HOR	*Ceanothus griseus horizontalis*	Carmel Creeper	1 Gal	24" O.C.	L
	51	HET ARB	*Hetromeles arbutifolia*	Toyon	1 Gal	24" O.C.	L
	170	LON HIS	*Lonicera hispidula*	California Honeysuckle	1 Gal	12" O.C.	L
	51	RIB AUR	*Ribes aureum*	Golden Penny	1 Gal	24" O.C.	L
	170	SAL MEL	*Salvia mellifera repens*	Creeping Black Sage	1 Gal	12" O.C.	L
	765	SUBTOTAL					
FERNS							
	252	POL CAL	*Polypodium californicum*	California Polypody	1 Gal	18" O.C.	M
	252	SUBTOTAL					

PLANT NOTES

1. PLANTING TO RECEIVE MULCH PER SPECS.
2. PLANT QUANTITY TOTALS ARE PROVIDED FOR CONTRACTOR'S CONVENIENCE ONLY. CONTRACTOR TO VERIFY ALL PLANT QUANTITIES.
3. SEE PLANT LIST FOR PLANT SPACING.
4. SHRUBS ARE TO EXTEND UNDER TREE PLANTINGS FOR FULL COVERAGE. SPACE SHRUBS 18" FROM TREES.

LICENSED LANDSCAPE ARCHITECT — G. Lindberg Lind — 03/31/2018 Renewal Date — 10/26/2016 Date — STATE OF CALIFORNIA

0" VERIFY SCALES 1" BAR IS ONE INCH LONG ON FULL SIZE DRAWING. IF NOT ONE INCH LONG ON THIS DRAWING, ADJUST SCALES ACCORDINGLY

rhaa — SAN FRANCISCO — MILL VALLEY — 235 Miller Avenue, Mill Valley, CA 94941 — P 415.383.1413

RMC — water and environment

REV	DATE	BY	APVD	DESCRIPTION

DESIGNED	MD
DRAWN	CA
CHECKED	BL

SUBMITTED: MARK TAKEMOTO CE-64369

APPROVED: STEVE CLARY CE-30318

SAUSALITO · MARIN CITY SANITARY DISTRICT

TREATMENT AND WET WEATHER FLOW UPGRADE

LANDSCAPE CONSTRUCTION AND PLANTING PLAN

DWG NO	L1
SHEET NO	64 OF 226
PROJ NO	055-006
DATE	NOVEMBER 2016

FILENAME: L:\Landscape Site Plan 10-26-16 04:44pm megan.dale XREFS: X-SMCSD-TBLK Plant Notes RHAA-Base X-Topo Survey new 0055-006-C100-1 X-Treatment Plant site plan Barbara Stamp Barbara signature MTakemoto-PE-stamp

Last Saved By: megan.dale 10-26-16 04:24pm



FILENAME: L1-1 Landscape Site Plan | 10-26-16 04:45pm megan.dale | XREFs: X-SMCSD-TBLK | Barbara Stamp | Barbara signature | RHAA-Base | X-Topo Survey new | 0055-006-C100-1 | X-Treatment Plant site plan | MTakemoto-PE-stamp |<<--

Last Saved By: megan.dale 10-26-16 04:01pm

LICENSED LANDSCAPE ARCHITECT — Barbara G. Lundberg Linville — No. 5155 — Renewal Date 10/31/2018 — 10/26/2016 Date — STATE OF CALIFORNIA

VERIFY SCALES
BAR IS ONE INCH
LONG ON FULL
SIZE DRAWING.
IF NOT ONE INCH
LONG ON THIS
DRAWING, ADJUST
SCALES ACCORDINGLY

rhaa — SAN FRANCISCO — MILL VALLEY — 235 Miller Avenue, Mill Valley, CA 94941 — T 415.383.1453

RMC — water and environment

REV	DATE	BY	APVD	DESCRIPTION
1				
2				
3				
4				
5				

DESIGNED	MD
DRAWN	CA
CHECKED	BL

SUBMITTED: MARK TAKEMOTO CE-64369

APPROVED: STEVE CLARY CE-30318

SAUSALITO · MARIN CITY SANITARY DISTRICT

TREATMENT AND WET WEATHER FLOW UPGRADE

PLANTING PLAN

DWG NO	L1-1
SHEET NO	65 OF 226
PROJ NO	055-006
DATE	NOVEMBER 2016

FILENAME: L1-2 Irrigation Plan | 10-26-16 04:48pm megan.dale | XREFS: X-SMCSD-TBLK | IRRIGATION PLAN | RHAA-Base | X-Topo Survey new | 0055-006-C100-1 | X-Treatment Plant site plan | Irrigation Legend | Irrigation Notes | Barbara Stamp | Barbara signature | MTakemoto-PE-stamp |<<--

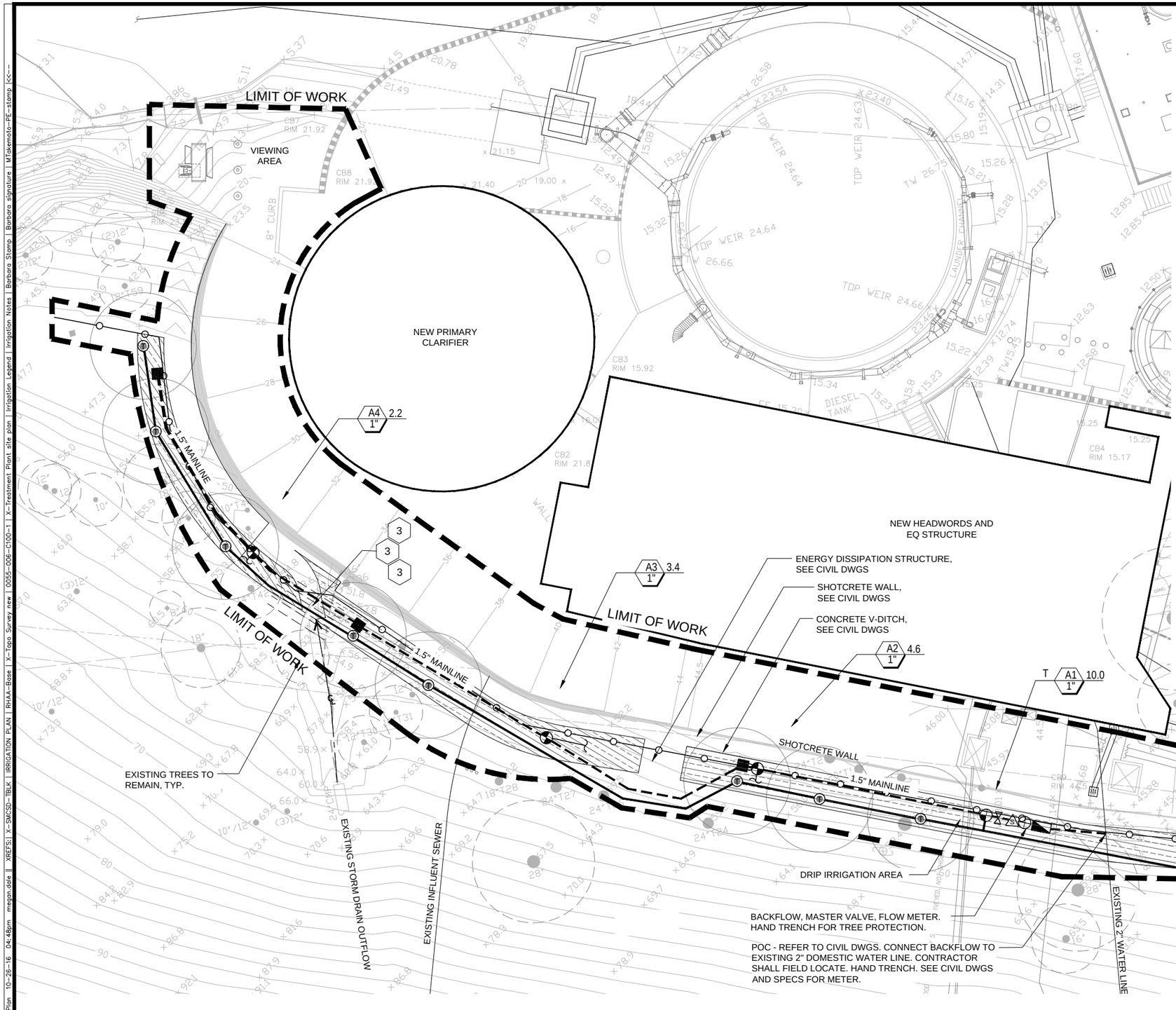

IRRIGATION LEGEND

		COMMENTS
GPM	GALLONS PER MINUTE	
POC	POINT OF CONNECTION	
	BACKFLOW PREVENTOR	1-1/2" REDUCED PRESSURE BACKFLOW PREVENTER WITH CHECK VALVES AND PRESSURE REGULATOR, LEAD FREE
	MASTER VALVE	CAST IRON BODY, DIAPHRAGM TYPE VALVE, BATTERY POWERED
S	FLOW SENSOR	INLINE, NON-MAGNETIC IMPELLER TYPE, LINE SIZE
	DRIP CONTROL VALVE	CAST IRON BODY, DIAPHRAGM TYPE VALVE, PRESSURE REGULATOR, BATTERY POWERED
	BUBBLER CONTROL VALVE	CAST IRON BODY, DIAPHRAGM TYPE VALVE, BATTERY POWERED
T	TREE BUBBLER	2 BUBBLERS PER TREE
	QUICK COUPLING VALVE	TWO PIECE, LINE SIZE
	BALL VALVE	LINE SIZE
	MAINLINE PIPE	1-1/2" SCHEDULE 40 PVC
	LATERAL LINE PIPE	SCHEDULE 40 PVC
3	SLEEVE AND SIZE	SCHEDULE 40 PVC
	DRIP IRRIGATION	
A1 0.0 1"	VALVE NUMBER GALLON PER MINUTE OF ZONE VALVE SIZE	

PIPE SIZE CHART

SIZE	SCH 40
1"	9-12
1 1/4"	13-21
1 1/2"	22-30
2"	31-49
2 1/2"	50-70

IRRIGATION NOTES

1. THIS PLAN IS DIAGRAMMATIC. ALL IRRIGATION PIPING AND EQUIPMENT SHOWN WITHIN PAVED AREAS IS FOR DESIGN CLARIFICATION ONLY AND SHALL BE INSTALLED IN PLANTING AREAS WHERE POSSIBLE. AVOID CONFLICTS WITH NEW PLANTING, NEW SITE ELEMENTS.
2. ALL EQUIPMENT SHALL CONFORM TO THE SPECIFICATIONS.
3. ALL EQUIPMENT SHALL CONFORM TO THE SAUSALITO REQUIREMENTS.
4. CONTRACTOR SHALL NOT DAMAGE OR REMOVE EXISTING IRRIGATION EQUIPMENT. NOTIFY OWNER'S REPRESENTATIVE IMMEDIATELY OF ANY CONFLICTS.
5. THE IRRIGATION SYSTEM IS DESIGNED TO OPERATE AT 40 GPM.
6. ALL PLANTING AREAS TO BE IRRIGATED WITH DRIP IRRIGATION SYSTEM. ALL PLANTER POCKETS WILL BE IRRIGATED WITH ONE EMITTER PER SHRUB.

LICENSED LANDSCAPE ARCHITECT — Barbara G. Lundburg Linville — Exp. Date 10/31/2018 — STATE OF CALIFORNIA

0" 1" — VERIFY SCALES BAR IS ONE INCH LONG ON FULL SIZE DRAWING. IF NOT ONE INCH LONG ON THIS DRAWING, ADJUST SCALES ACCORDINGLY

rhaa — SAN FRANCISCO MILL VALLEY — 225 Miller Avenue, Mill Valley, CA 94941 T 415 383 1453

RMC water and environment

REV	DATE	BY	APVD	DESCRIPTION

DESIGNED	MD
DRAWN	CA
CHECKED	BL

SUBMITTED: MARK TAKEMOTO CE-64369

APPROVED: STEVE CLARY CE-30318

SAUSALITO · MARIN CITY SANITARY DISTRICT

TREATMENT AND WET WEATHER FLOW UPGRADE

IRRIGATION PLAN

DWG NO	L1-2
SHEET NO	66 OF 226
PROJ NO	055-006
DATE	NOVEMBER 2016

Last Saved By: megan.dale 10-26-16 04:01pm

FILENAME: L1-3 Irrigation Plan | 10-26-16 04:48pm megan.dale | XREFS: | X-SMCSD-TBLK | Barbara Stamp | Barbara signature | IRRIGATION PLAN | RHAA-Base | X-Topo Survey new | 0055-006-C100-1 | X-Treatment Plant site plan | MTakemoto-PE-stamp |<<--

DRIP IRRIGATION SYSTEM. CONNECT CONTROL VALVE AT QUICK COUPLER AT SOUTHWEST CORNER OF BUILDING, SEE SPECS.

A5 4.0 1"

LIMIT OF WORK

LIMIT OF WORK

LIMIT OF WORK

LIMIT OF WORK

LIMIT OF WORK

SHIPPING CONTAINER (FLAMMABLE LIQUIDS)

PLYWOOD SHED

COVERED CONC. SLAB

EXISTING CULVERT

GARAGE

FUEL STATION

GARDEN BUILDING

MACHINE SHOP

CATCH BASIN (TYP)

EXISTING CULVERT

EXISTING CULVERT

18" CMP CULVERT 12" ± MIN. COVER

18" CMP CULVERT 24" ± COVER

2" WIDE VALLEY GUTTER

12" LEANING

12" TREE AT DECK

AT GROUND

N

0 5 10 20

LICENSED LANDSCAPE ARCHITECT Barbara Lindsay Stamp Signature 03/31/2018 Renewal Date 10/26/2016 Date STATE OF CALIFORNIA

0" 1" VERIFY SCALES BAR IS ONE INCH LONG ON FULL SIZE DRAWING. IF NOT ONE INCH LONG ON THIS DRAWING, ADJUST SCALES ACCORDINGLY

rhaa SAN FRANCISCO MILL VALLEY 235 Miller Avenue, Mill Valley, CA 94941 T 415.383.6622

RMC water and environment

REV	DATE	BY	APVD	DESCRIPTION

DESIGNED	MD
DRAWN	CA
CHECKED	BL

SUBMITTED: MARK TAKEMOTO CE-64369

APPROVED: STEVE CLARY CE-30318

SAUSALITO · MARIN CITY SANITARY DISTRICT

TREATMENT AND WET WEATHER FLOW UPGRADE

IRRIGATION PLAN

DWG NO	L1-3
SHEET NO	67 OF 226
PROJ NO	055-006
DATE	NOVEMBER 2016

Last Saved By: megan.dale 10-26-16 04:00pm

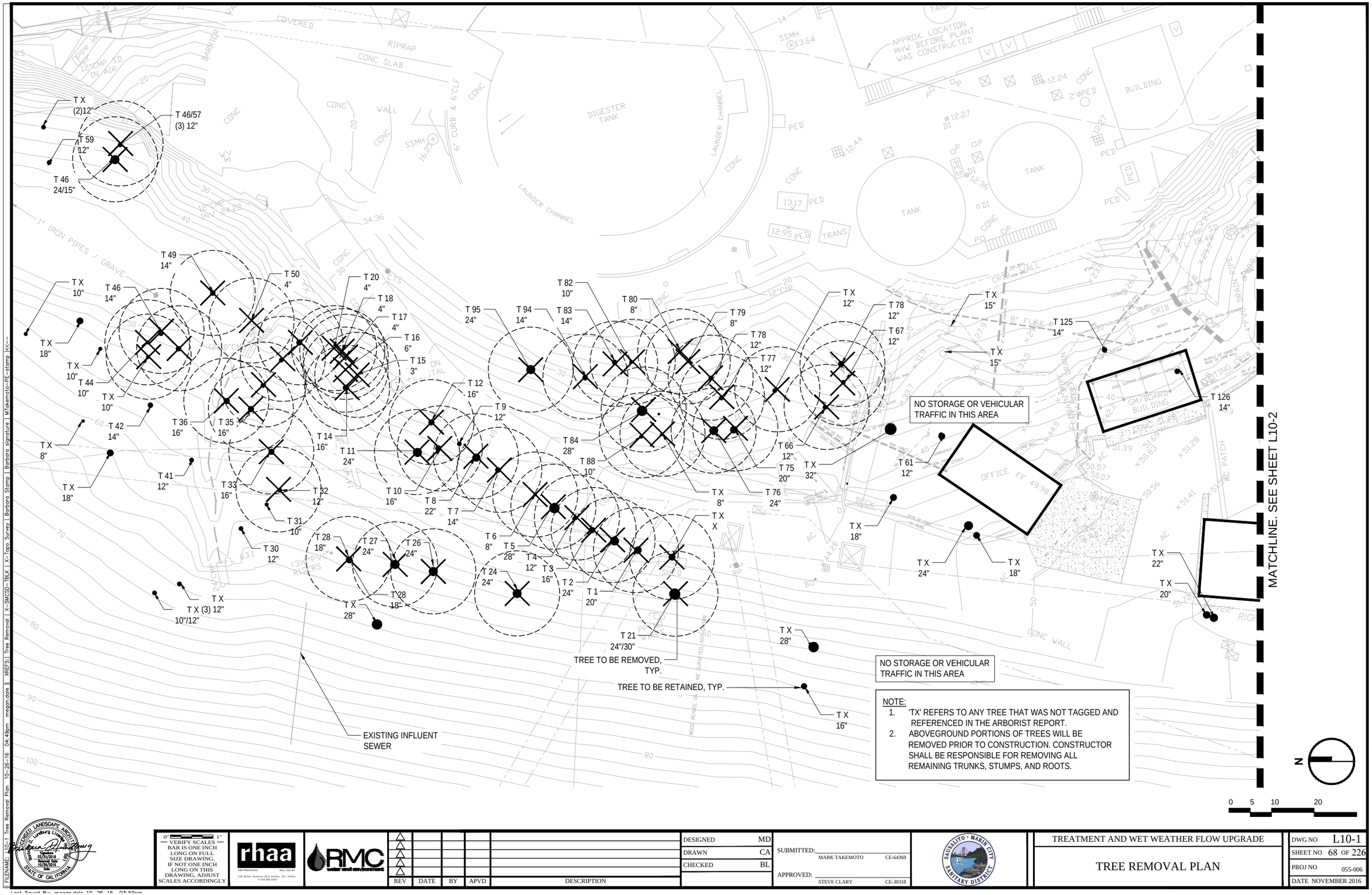

NOTE:
1. 'TX' REFERS TO ANY TREE THAT WAS NOT TAGGED AND REFERENCED IN THE ARBORIST REPORT.
2. ABOVEGROUND PORTIONS OF TREES WILL BE REMOVED PRIOR TO CONSTRUCTION. CONSTRUCTOR SHALL BE RESPONSIBLE FOR REMOVING ALL REMAINING TRUNKS, STUMPS, AND ROOTS.

LICENSED LANDSCAPE ARCHITECT — Barbara D. Lindberg License No. 5482 — Signature — Date 03/31/2018 — Renewal Date 10/26/2018 — STATE OF CALIFORNIA

0" 1" — VERIFY SCALES BAR IS ONE INCH LONG ON FULL SIZE DRAWING. IF NOT ONE INCH LONG ON THIS DRAWING, ADJUST SCALES ACCORDINGLY

rhaa — SAN FRANCISCO MILL VALLEY — 235 Miller Avenue, Mill Valley, CA 94941 — T 415 383 1433 — F 415 383 1433

RMC Water and Environment

REV	DATE	BY	APVD	DESCRIPTION

DESIGNED	MD
DRAWN	CA
CHECKED	BL

SUBMITTED: MARK TAKEMOTO CE-64369

APPROVED: STEVE CLARY CE-30318

SAUSALITO - MARIN CITY SANITARY DISTRICT

TREATMENT AND WET WEATHER FLOW UPGRADE

TREE REMOVAL PLAN

DWG NO	L10-1
SHEET NO	68 OF 226
PROJ NO	055-006
DATE	NOVEMBER 2016

FILENAME: L10-1 Tree Removal Plan 10-26-16 04:49pm megan.dole | XREFS: Tree Removal | X-SMCSD-TBLK | X-Topo Survey | Barbara Stamp | MTakemoto-PE-stamp |<<--

Last Saved By: megan.dole 10-26-16 03:59pm

NOTE:
1. 'TX' REFERS TO ANY TREE THAT WAS NOT TAGGED AND REFERENCED IN THE ARBORIST REPORT.
2. ABOVEGROUND PORTIONS OF TREES WILL BE REMOVED PRIOR TO CONSTRUCTION. CONSTRUCTOR SHALL BE RESPONSIBLE FOR REMOVING ALL REMAINING TRUNKS, STUMPS, AND ROOTS.

MATCHLINE. SEE SHEET L10-1

TREE TO BE RETAINED, TYP.

TREE TO BE REMOVED, TYP.

CRITICAL STRUCTURAL ROOT ZONE OF TREES, TYP.

NO STORAGE OR VEHICULAR TRAFFIC IN THIS AREA

NO STORAGE OR VEHICULAR TRAFFIC IN THIS AREA

NO STORAGE OR VEHICULAR TRAFFIC IN THIS AREA

NO STORAGE OR VEHICULAR TRAFFIC IN THIS AREA

T X 12"

T X 6"

T X 12"

T X 10"

T X 18"

T X 19"

T X 18"

T 125 14"

T 75 20"

12" TREE AT DECK

AT GROUND

WOOD DECK

HOUSE

FF 64.53

FF 64.60

FF 64.64

FF 64.73

FF 61.69

GARAGE

ROTTEN DECK

PLYWOOD SHED

COVERED CONC SLAB

SHIPPING CONTAINER FLAMMABLE LIQUIDS

SHIPPING CONTAINER

RAMP UP

100' WIDE SHORELINE

CRIB WALL

TOP EDGE

TOE OF PAD

3/4"GAS DN GND

PROPANE

ELEC

GARDEN BUILDING

MACHINE SHOP

FUEL STATION

CONC PAD

STEPS

AC PATCH

GATE POST

BUILDING

COVERED

CONC

FF 92.70

FENCE

2"PVC DN GND

2"CMP DN GND

(2)ELEC

12"CMP

84.13

92.06

94.65

18"CMP

ADJUSTED - ROT. TRANS. DATUM

DATUM - HELD ELEV. 45

0 5 10 20

N

LICENSED LANDSCAPE ARCHITECT
D. Lindberg Lic.
05/31/2018
Renewal Date
10/26/2016
Date
STATE OF CALIFORNIA

VERIFY SCALES — BAR IS ONE INCH LONG ON FULL SIZE DRAWING. IF NOT ONE INCH LONG ON THIS DRAWING, ADJUST SCALES ACCORDINGLY

rhaa
SAN FRANCISCO MILL VALLEY
235 Miller Avenue, Mill Valley, CA 94941
T 415.383.6666 F 415.383.2422

RMC water and environment

REV	DATE	BY	APVD	DESCRIPTION

DESIGNED	MD
DRAWN	CA
CHECKED	BL

SUBMITTED: MARK TAKEMOTO CE-64369

APPROVED: STEVE CLARY CE-30318

SAUSALITO · MARIN CITY SANITARY DISTRICT

TREATMENT AND WET WEATHER FLOW UPGRADE

TREE REMOVAL PLAN

DWG NO	L10-2
SHEET NO	69 OF 226
PROJ NO	055-006
DATE	NOVEMBER 2016

FILENAME: NO-2 Tree Removal Plan 10-26-16 04:49pm megan.dale XREFS: Tree Removal | X-SMCSD-TBLK | X-Topo Survey | Barbara Stamp | Barbara signature | MTakemoto-PE-stamp | KC-

Last Saved By: megan.dale 10-26-16 03:59pm

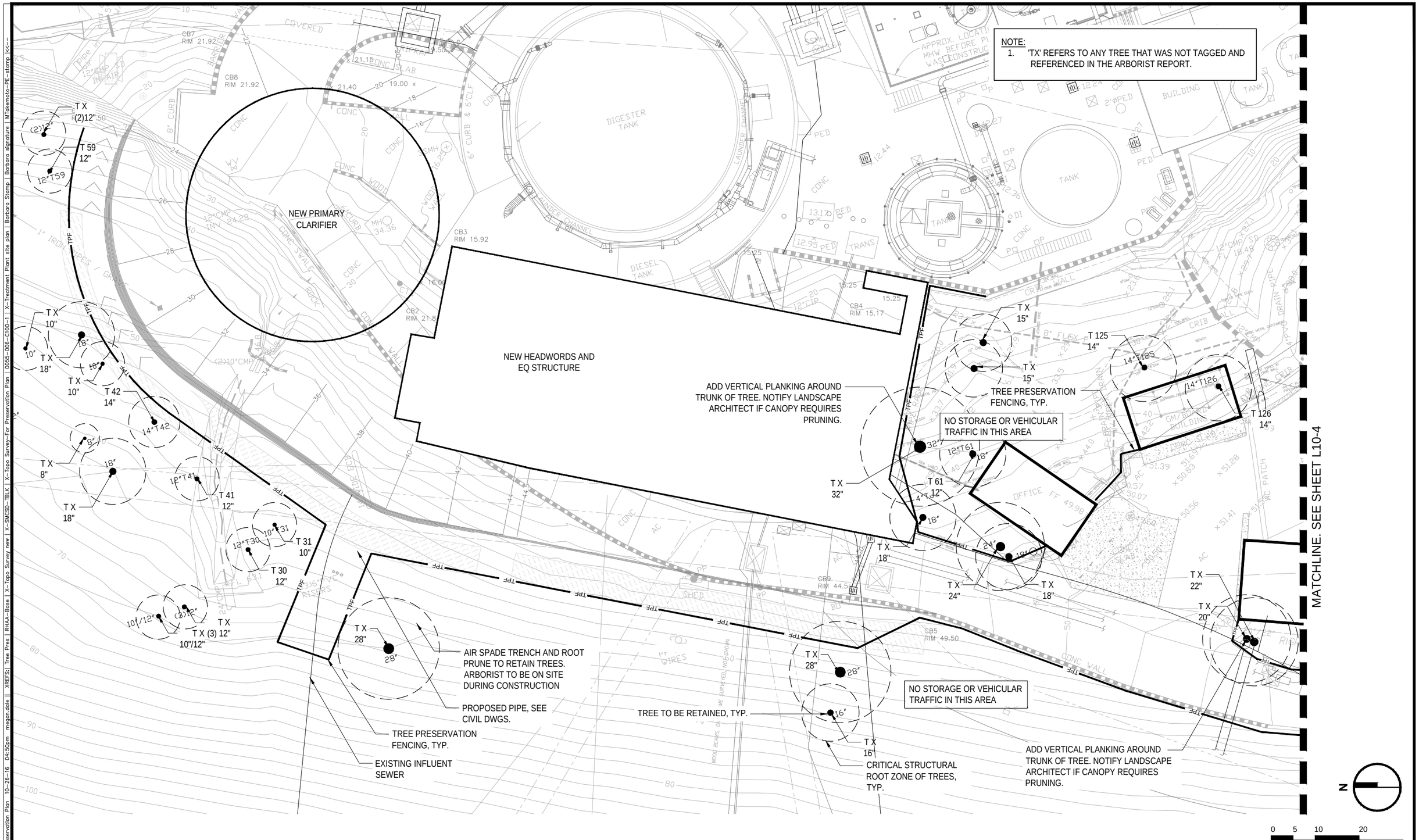

FILENAME: L10-3 Tree Preservation Plan 10-26-16 04:50pm megan.dale || XREFS: | Tree Pres | RHAA-Base | X-Topo Survey new | X-SMCSD-TBLK | X-Topo Survey-For Preservation Plan | 0055-006-C100-1 | X-Treatment Plant site plan | Barbara Stamp | Barbara signature | MTakemoto-PE-stamp |<<--

LICENSED LANDSCAPE ARCHITECT
Barbara D. Lundburg License No. 1658
Signature 03/31/2018
Renewal Date 10/26/2016
Date
STATE OF CALIFORNIA

0" 1"
VERIFY SCALES
BAR IS ONE INCH LONG ON FULL SIZE DRAWING. IF NOT ONE INCH LONG ON THIS DRAWING, ADJUST SCALES ACCORDINGLY

rhaa
SAN FRANCISCO MILL VALLEY
225 Miller Avenue, Mill Valley, CA 94941
P 415 383 1433

RMC water and environment

REV	DATE	BY	APVD	DESCRIPTION

DESIGNED	MD
DRAWN	CA
CHECKED	BL

SUBMITTED: MARK TAKEMOTO CE-64369
APPROVED: STEVE CLARY CE-30318

SAUSALITO · MARIN CITY SANITARY DISTRICT

TREATMENT AND WET WEATHER FLOW UPGRADE

TREE PRESERVATION PLAN

DWG NO	L10-3
SHEET NO	70 OF 226
PROJ NO	055-006
DATE	NOVEMBER 2016

Last Saved By: megan.dale 10-26-16 03:58pm

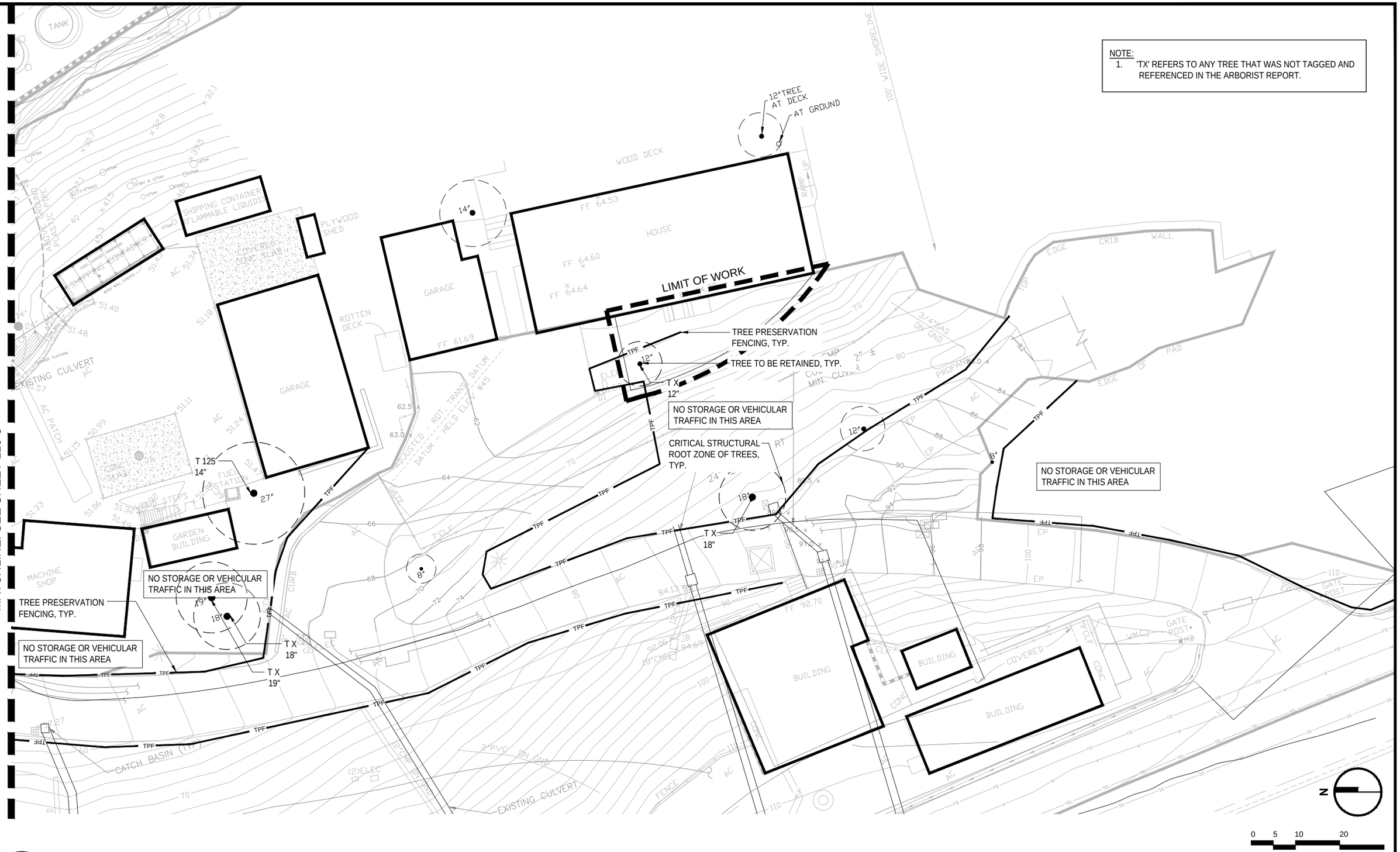

FILENAME: L10-4 Tree Preservation Plan 10-26-16 04:50pm megan.dale || XREFS: | Tree Pres | RHAA-Base | X-Topo Survey new | X-SMCSD-TBLK | X-Topo Survey-For Preservation Plan | 0055-006-C100-1 | X-Treatment Plant site plan | Barbara Stamp | Barbara signature | MTakemoto-PE-stamp | <<--

LICENSED LANDSCAPE ARCHITECT
Donald D. Lundburg Licence No. 1653
Signature 03/31/2018
Renewal Date 10/26/2016
Date
STATE OF CALIFORNIA

0" 1"
VERIFY SCALES
BAR IS ONE INCH LONG ON FULL SIZE DRAWING. IF NOT ONE INCH LONG ON THIS DRAWING, ADJUST SCALES ACCORDINGLY

rhaa
SAN FRANCISCO MILL VALLEY
225 Miller Avenue, Mill Valley, CA 94941
P 415 383 1433

RMC water and environment

REV	DATE	BY	APVD	DESCRIPTION

DESIGNED	MD
DRAWN	CA
CHECKED	BL

SUBMITTED: MARK TAKEMOTO CE-64369

APPROVED: STEVE CLARY CE-30318

SAUSALITO · MARIN CITY SANITARY DISTRICT

TREATMENT AND WET WEATHER FLOW UPGRADE

TREE PRESERVATION PLAN

DWG NO	L10-4
SHEET NO	71 OF 226
PROJ NO	055-006
DATE	NOVEMBER 2016

Last Saved By: megan.dale 10-26-16 03:57pm

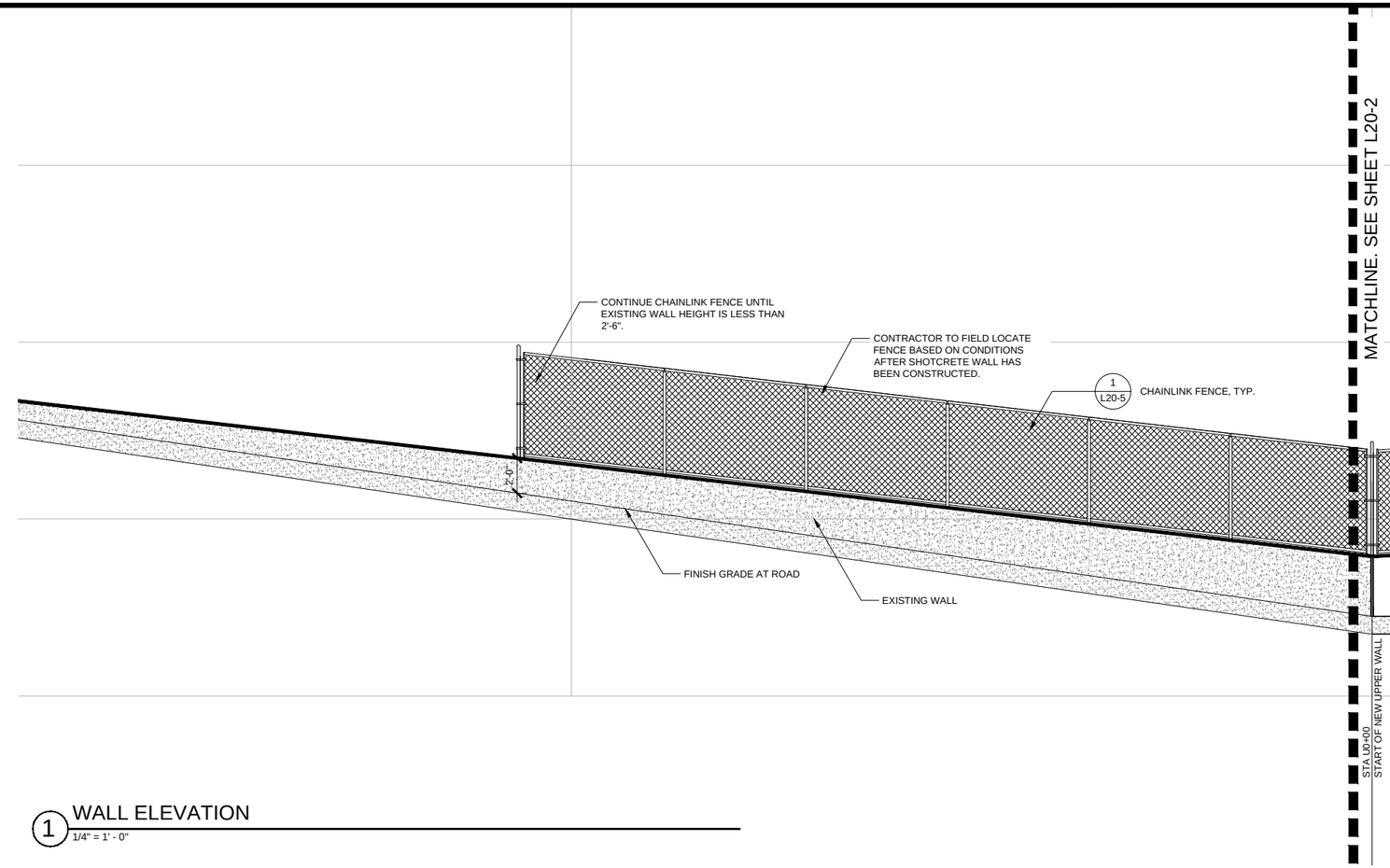

1 WALL ELEVATION
1/4" = 1' - 0"

FILENAME: L20-1 Wall Elevation 10-26-16 04:51pm megan.dale || XREFS: | X-SMCSD-TBLK | Wall Elevation | WALL-2 | X-Wall | Barbara Stamp | Barbara signature | MTakemoto-PE-stamp |<<--

LICENSED LANDSCAPE ARCHITECT
Barbara D. Lundburg Licence No. 1659
Signature 03/31/2018
Renewal Date 10/26/2016
Date
STATE OF CALIFORNIA

0" 1"
VERIFY SCALES
BAR IS ONE INCH LONG ON FULL SIZE DRAWING. IF NOT ONE INCH LONG ON THIS DRAWING, ADJUST SCALES ACCORDINGLY

rhaa
SAN FRANCISCO MILL VALLEY
225 Miller Avenue, Mill Valley, CA 94941
P 415 383 1433

RMC water and environment

REV	DATE	BY	APVD	DESCRIPTION
△				
△				
△				
△				
△				

DESIGNED	MD
DRAWN	CA
CHECKED	BL

SUBMITTED: MARK TAKEMOTO CE-64369
APPROVED: STEVE CLARY CE-30318

SAUSALITO · MARIN CITY SANITARY DISTRICT

TREATMENT AND WET WEATHER FLOW UPGRADE

WALL ELEVATION

DWG NO	L20-1
SHEET NO	72 OF 226
PROJ NO	055-006
DATE	NOVEMBER 2016

Last Saved By: megan.dale 10-26-16 03:57pm

MATCHLINE. SEE SHEET L20-1

MATCHLINE. SEE SHEET L20-3

CONTRACTOR TO FIELD LOCATE FENCE BASED ON CONDITIONS AFTER SHOTCRETE WALL HAS BEEN CONSTRUCTED.

1 / L20-5 CHAINLINK FENCE, TYP.

TOP OF WALL

INLET STRUCTURE BEHIND WALL AND UNDER ROAD

EXISTING WALL TO REMAIN

SOIL NAILS, SEE CIVIL DWGS

WEEP HOLES AT 12" O.C., TYP., SEE CIVIL DWGS

SHOTCRETE WALL, SEE CIVIL DWGS

FINISH GRADE AT ROAD

STA U0+00
START OF NEW UPPER WALL

STA U1+00
NEW INFLUENT STRUCTURE

24"x20" TEE,
STA 2+00.00
INV 38.39

20" KNIFE GV, SEE
STA 2+02.69

45° BEND, STA 2+05.98
INV 38.56

45° BEND, STA 2+10.55
INV 34.00

20" TEE,
STA 2+14.18
INV 34.00

2 WALL ELEVATION

1/4" = 1' - 0"

LICENSED LANDSCAPE ARCHITECT
Kara D. Lindberg Lisac
No. 5555
03/31/2018
Renewal Date
10/26/2016
Date
STATE OF CALIFORNIA

0" 1"
VERIFY SCALES
BAR IS ONE INCH
LONG ON FULL
SIZE DRAWING.
IF NOT ONE INCH
LONG ON THIS
DRAWING, ADJUST
SCALES ACCORDINGLY

rhaa
SAN FRANCISCO MILL VALLEY
235 Miller Avenue, Mill Valley, CA 94941
P 415.380.1410

RMC
water and environment

REV	DATE	BY	APVD	DESCRIPTION

DESIGNED	MD
DRAWN	CA
CHECKED	BL

SUBMITTED: MARK TAKEMOTO CE-64369

APPROVED: STEVE CLARY CE-30318

SAUSALITO · MARIN CITY SANITARY DISTRICT

TREATMENT AND WET WEATHER FLOW UPGRADE

WALL ELEVATION

DWG NO	L20-2
SHEET NO	73 OF 226
PROJ NO	055-006
DATE	NOVEMBER 2016

FILENAME: L20-2 Wall Elevation 10-26-16 04:51pm megan.dale XREFS: X-SMCSD-TBLK | Wall Elevation | WALL-2 | X-Wall | Barbara Stamp | Barbara signature | MTakemoto-PE-stamp |<<--

Last Saved By: megan.dale 10-26-16 03:56pm

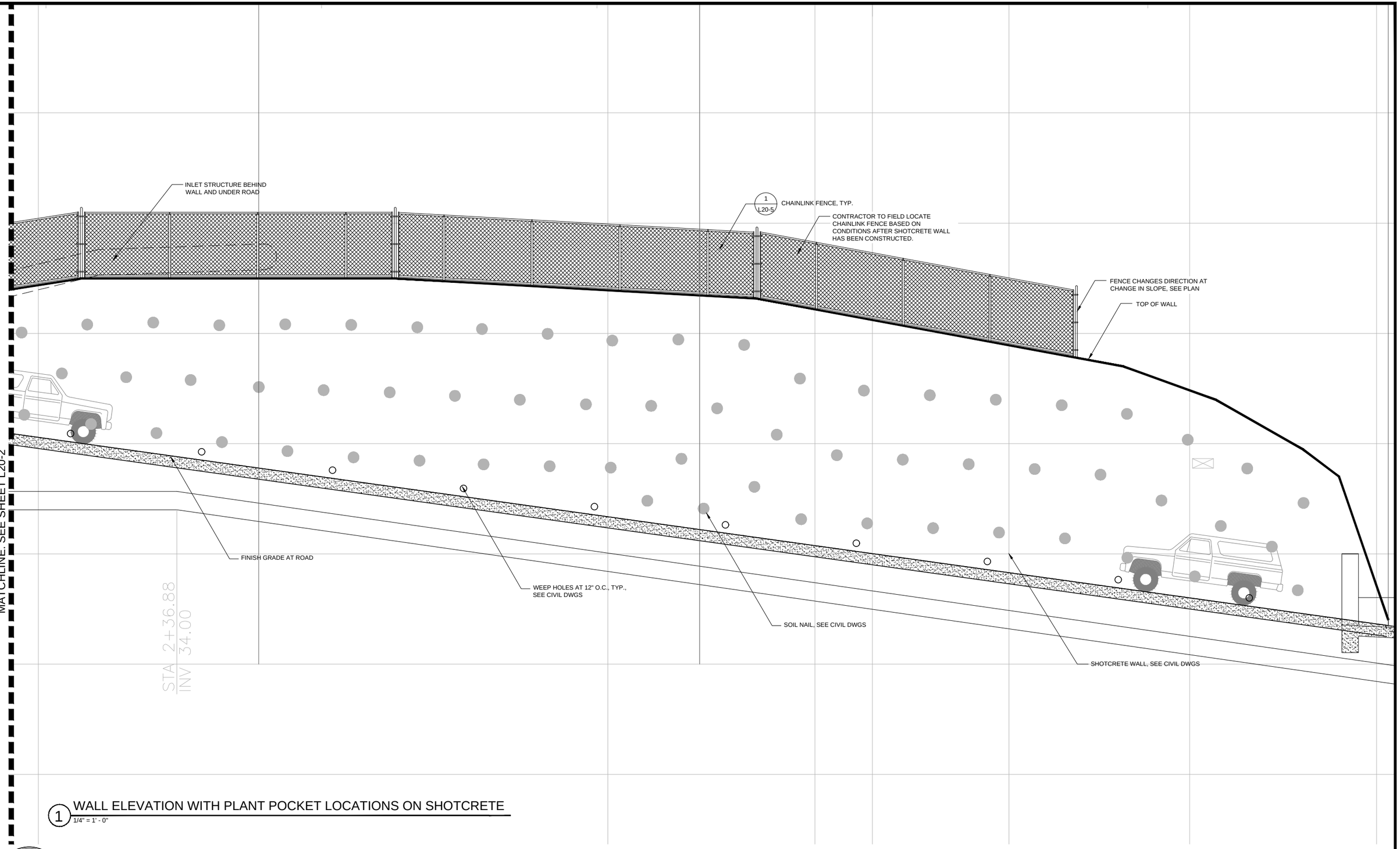

1 WALL ELEVATION WITH PLANT POCKET LOCATIONS ON SHOTCRETE
1/4" = 1' - 0"

FILENAME: L20-3 Wall Elevation 10-26-16 04:51pm megan.dale || XREFS: | X-SMCSD-TBLK | Wall Elevation | WALL-2 | X-Wall | Barbara Stamp | Barbara signature | MTakemoto-PE-stamp |<<--

LICENSED LANDSCAPE ARCHITECT
Bernard D. Lindburg Licensee
Signature
03/31/2018
Renewal Date
10/26/2016
Date
STATE OF CALIFORNIA

0" 1"
VERIFY SCALES
BAR IS ONE INCH LONG ON FULL SIZE DRAWING. IF NOT ONE INCH LONG ON THIS DRAWING, ADJUST SCALES ACCORDINGLY

rhaa
SAN FRANCISCO MILL VALLEY
225 Miller Avenue, Mill Valley, CA 94941
P 415 383 1433

RMC water and environment

REV	DATE	BY	APVD	DESCRIPTION

DESIGNED	MD
DRAWN	CA
CHECKED	BL

SUBMITTED: MARK TAKEMOTO CE-64369
APPROVED: STEVE CLARY CE-30318

SAUSALITO · MARIN CITY SANITARY DISTRICT

TREATMENT AND WET WEATHER FLOW UPGRADE

WALL ELEVATION

DWG NO	L20-3
SHEET NO	74 OF 226
PROJ NO	055-006
DATE	NOVEMBER 2016

Last Saved By: megan.dale 10-26-16 03:56pm

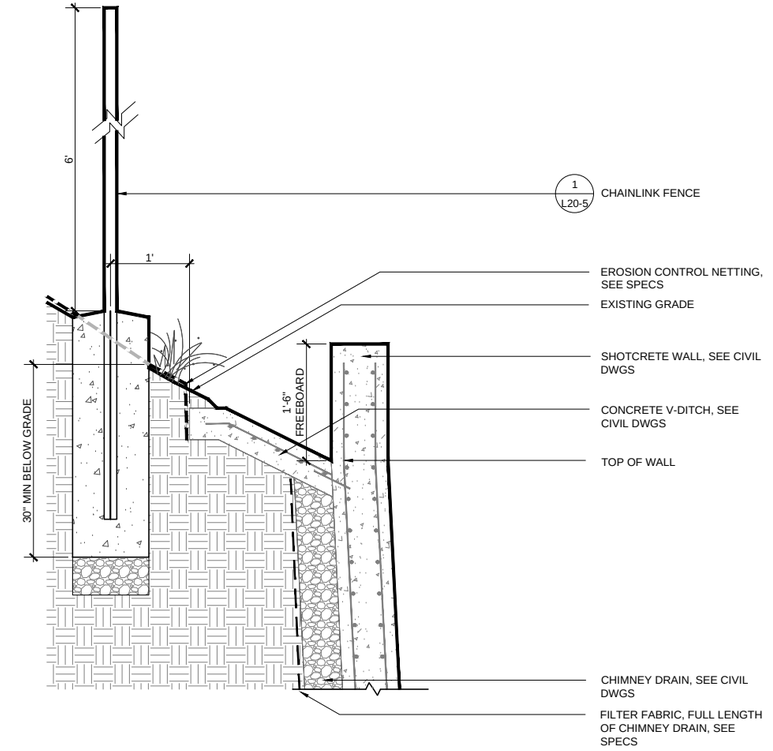

1 CONCRETE V-DITCH WITH FENCE SECTION
1" = 1'-0"

FILENAME: L20-4 Wall Section 10-26-16 04:52pm megan.dale || XREFS: X-SMCSD-TBLK | Planter Pockets | Vine Pocket_16 | X-SitePlan | Barbara Stamp | Barbara signature | MTakemoto-PE-stamp |<<--

LICENSED LANDSCAPE ARCHITECT
Barbara D. Lundburg License No. 1659
Signature 03/31/2018
Renewal Date 10/26/2016
Date
STATE OF CALIFORNIA

0" 1"
VERIFY SCALES
BAR IS ONE INCH LONG ON FULL SIZE DRAWING. IF NOT ONE INCH LONG ON THIS DRAWING, ADJUST SCALES ACCORDINGLY

rhaa
SAN FRANCISCO MILL VALLEY
225 Miller Avenue, Mill Valley, CA 94941
P 415 383 1433

RMC water and environment

REV	DATE	BY	APVD	DESCRIPTION
△				
△				
△				
△				
△				

DESIGNED	MD
DRAWN	CA
CHECKED	BL

SUBMITTED: MARK TAKEMOTO CE-64369
APPROVED: STEVE CLARY CE-30318

SAUSALITO · MARIN CITY SANITARY DISTRICT

TREATMENT AND WET WEATHER FLOW UPGRADE

CONSTRUCTION DETAILS

DWG NO	L20-4
SHEET NO	75 OF 226
PROJ NO	055-006
DATE	NOVEMBER 2016

Last Saved By: megan.dale 10-26-16 03:55pm

FILENAME: K20-5 Fence Details 10-26-16 04:52pm megan.dale || XREFS: X-SMCSD-TBLK | CABLE RAIL | Barbara Stamp | TF3195 = v | Chainlink Fence On Slope-24 | MTakemoto-PE-stamp |<<--

NOTE:
1. ALL STAINLESS STEEL SHALL BE 316 MARINE GRADE.
2. CONTRACTOR TO SUBMIT FASTENER SAMPLE AND PRODUCT DATA FOR APPROVAL.

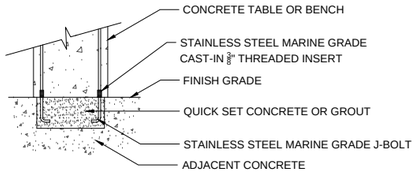

ATTACHMENT ENLARGEMENT
NTS

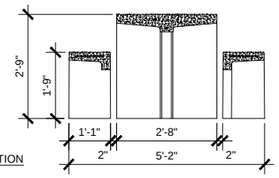

SECTION

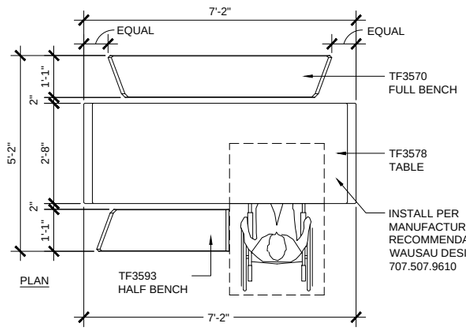

PLAN

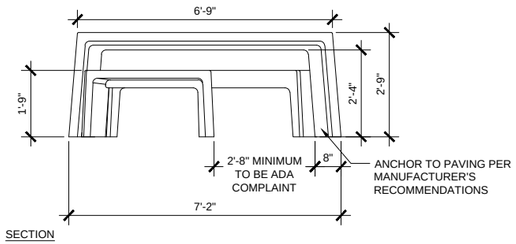

SECTION

2 PICNIC TABLE

NTS

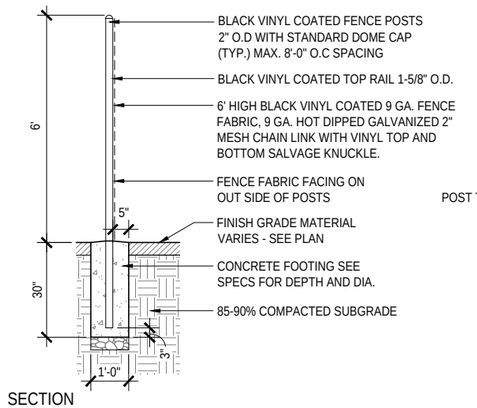

SECTION

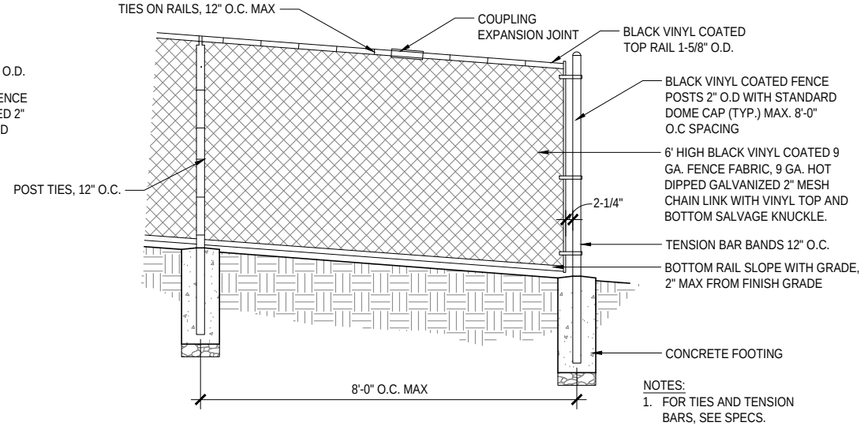

NOTES:
1. FOR TIES AND TENSION BARS, SEE SPECS.

1 CHAINLINK FENCE ON SLOPE

SCALE: 1/2" = 1'-0"

LICENSED LANDSCAPE ARCHITECT
Barbara A. Lindberg Stamp
03/31/2018
Renewal Date
10/31/2018
Date
STATE OF CALIFORNIA

0" 1"
VERIFY SCALES
BAR IS ONE INCH
LONG ON FULL
SIZE DRAWING.
IF NOT ONE INCH
LONG ON THIS
DRAWING, ADJUST
SCALES ACCORDINGLY

rhaa
SAN FRANCISCO MILL VALLEY
225 Miller Avenue, Mill Valley, CA 94941
T 415 340 1410

RMC
water and environment

REV	DATE	BY	APVD	DESCRIPTION

DESIGNED	MD
DRAWN	CA
CHECKED	BL

SUBMITTED: MARK TAKEMOTO CE-64369
APPROVED: STEVE CLARY CE-30318

SAUSALITO • MARIN CITY SANITARY DISTRICT

TREATMENT AND WET WEATHER FLOW UPGRADE

CONSTRUCTION DETAILS

DWG NO	L20-5
SHEET NO	76 OF 226
PROJ NO	055-006
DATE	NOVEMBER 2016

Last Saved By: megan.dale 10-26-16 03:55pm

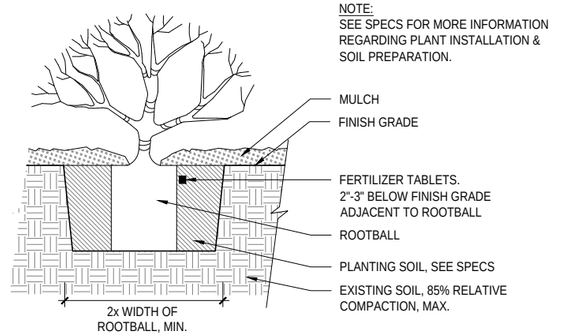

SECTION

1 SHRUB PLANTING

NOT TO SCALE

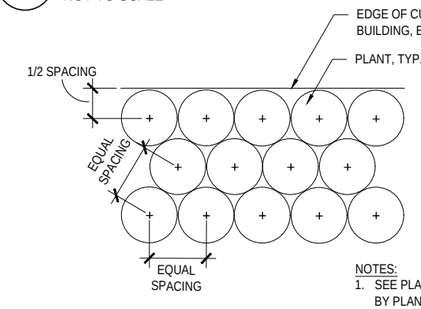

NOTES:
1. SEE PLANTING PLAN FOR SPACING BY PLANT SPECIES.
2. INSTALL TRIANGULATED PLANT LAYOUT, UNLESS OTHERWISE SHOWN ON PLANS.

PLAN

2 SHRUB PLANTING - LAYOUT

NOT TO SCALE

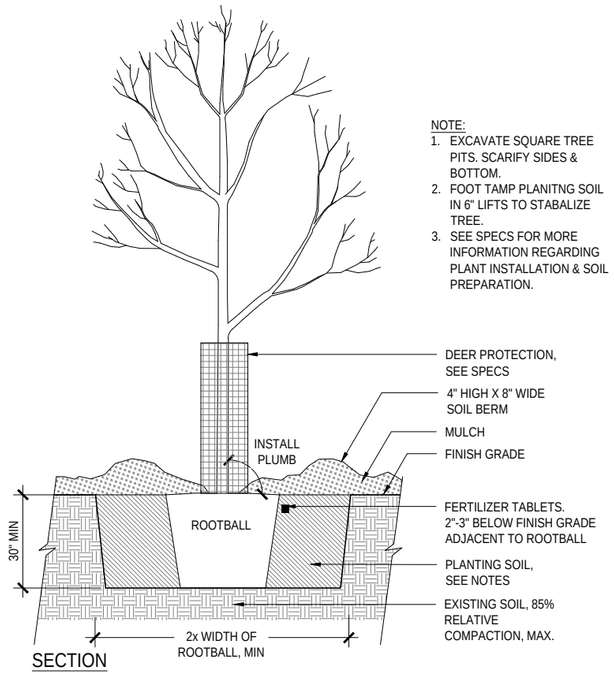

SECTION

4 TREE PLANTING

NTS

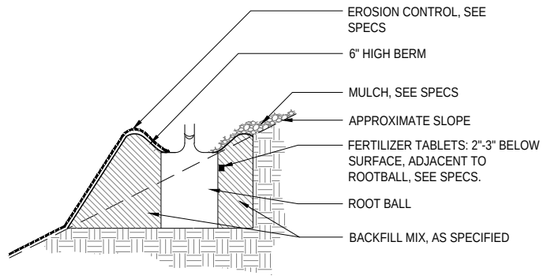

SECTION

3 PLANTING ON SLOPE

NOT TO SCALE

LICENSED LANDSCAPE ARCHITECT — Steven D. Lindberg Liang — No. 5151 — 05/31/2018 Renewal Date — 10/26/2016 Date — STATE OF CALIFORNIA

0" 1" — VERIFY SCALES — BAR IS ONE INCH LONG ON FULL SIZE DRAWING. IF NOT ONE INCH LONG ON THIS DRAWING, ADJUST SCALES ACCORDINGLY	rhaa — SAN FRANCISCO, MILL VALLEY — 225 Miller Avenue, Mill Valley, CA 94941 — P 415.380.1433	RMC water and environment			

REV	DATE	BY	APVD	DESCRIPTION

DESIGNED	MD
DRAWN	CA
CHECKED	BL

SUBMITTED: MARK TAKEMOTO CE-64369

APPROVED: STEVE CLARY CE-30318

SAUSALITO • MARIN CITY SANITARY DISTRICT

TREATMENT AND WET WEATHER FLOW UPGRADE

PLANTING DETAILS

DWG NO	L20-6
SHEET NO	77 OF 226
PROJ NO	055-006
DATE	NOVEMBER 2016

FILENAME: L20-6 Planting Details 10-26-16 04:52pm megan.dale | XREFS: X-SMCSD-TBLK | Plant Spacing_24 | Planting on Slope_16 | PLT_shrub | Barbara Stamp | Barbara signature | Tree Planting_16 | MTakemoto-PE-stamp |<<--

Last Saved By: megan.dale 10-26-16 03:54pm

FILENAME: L30-1 Irrigation Details | 10-26-16 04:53pm megan.dale | XREFS: Drip Remote Control Valve_rainbird | Flow Meter | IRR_wall controller | Irrbub24 | Irtrnch4 | Isolation Valve | DRIP TUBING INSTALLATION | QuickCouplingValve1-2 | RemoteControlValve1-2 | Root Watering System | Valve Boxes | VALV GRP | X-SMDst
Last Saved By: megan.dale 10-26-16 03:53pm

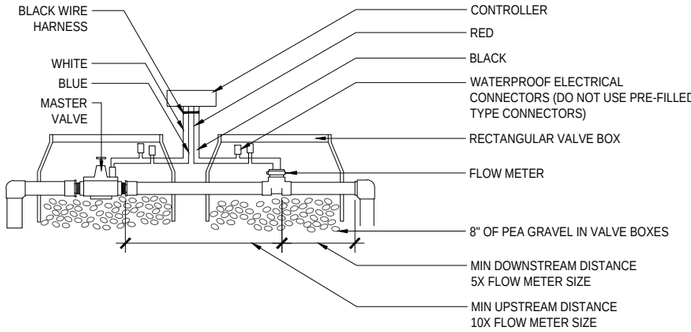

6 MASTER VALVE AND FLOW METER
NTS

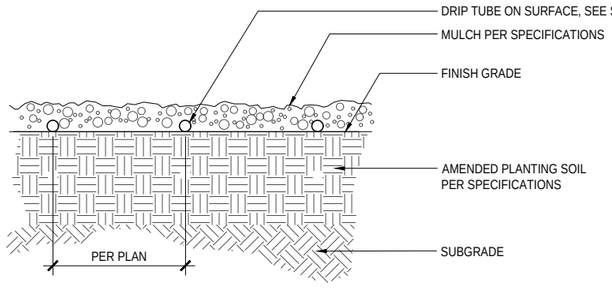

7 DRIPLINE INSTALLATION
NTS

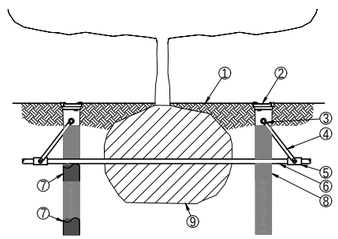

① FINISH GRADE
② ROOT WATERING SYSTEM: RAIN BIRD RWS-M
③ 1/2" (1,3 CM) SPIRAL BARB FITTING (INCLUDED)
④ 1/2" (1,3 CM) SWING ASSEMBLY: RAIN BIRD SA-125050
OR
1/2" (1,3 CM) SWING PIPE: RAIN BIRD SP SERIES WITH 1/2" (1,3 CM) MALE NPT x 0.490" BARB ELBOW: RAIN BIRD SBE-050
⑤ PVC SCH 40 TEE OR EL
⑥ PVC OR POLYETHYLENE LATERAL PIPE
⑦ OPTIONAL SOCK (RWS-SOCK) FOR SANDY SOILS
⑧ 4" (10,2 CM) WIDE X 18" (45,7 CM) LONG RIGID BASKET WEAVE CANISTER (INCLUDED)
⑨ PLANT ROOT BALL

NOTES:
1. POSITION EVENLY SPACED AROUND PLANT.
2. INSTALL PRODUCT WITH TOP EVEN WITH FINISH GRADE
3. RWS-M SERIES AVAILABLE IN THE FOLLOWING MODELS:
RWS-M-B-C-1401: 0.25 GPM (0,95 L/M), CHECK VALVE
RWS-M-B-1401: 0.25 GPM (0,95 L/M)
RWS-M-B-C-1402: 0.5 GPM (1,9 L/M), CHECK VALVE
RWS-M-B-1402: 0.5 GPM (1,9 L/M),
4. WHEN INSTALLING IN EXTREMELY HARD OR CLAY SOILS, ADD 3/4" (1,9 CM) GRAVEL UNDER AND AROUND THE UNIT TO ALLOW FASTER WATER INFILTRATION AND ROOT PENETRATION.
5. ONCE RWS-M HAS BEEN INSTALLED FILL THE BASKET WITH PEA GRAVEL BEFORE LOCKING LID.
6. OPTIONAL RWS-SOCK FOR USE IN SANDY SOILS.

8 TREE BUBBLER
NTS

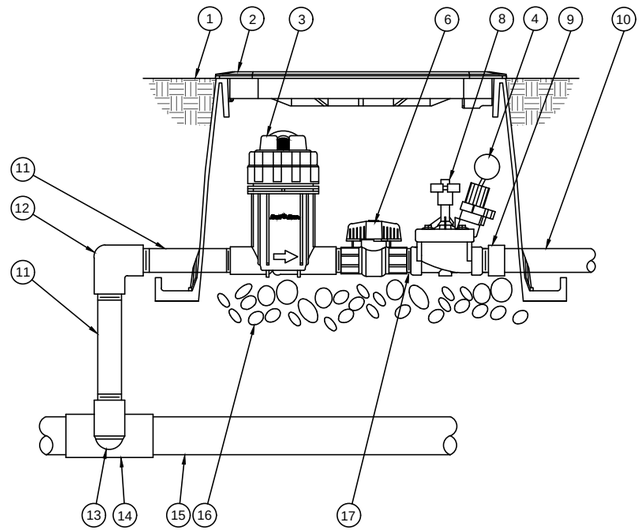

① FINISH GRADE/TOP OF MULCH
② VALVE BOX WITH COVER:
③ PRESSURE REGULATING QUICK CHECK BASKET FILTER:
RAIN BIRD PRB-QKCHK-100
(INCLUDED IN XCZ-PRB-100-COM KIT)
④ BATTERY POWERED SOLENOID
⑤ NOT USED
⑥ 1-INCH BALL VALVE (INCLUDED IN XCZ-PRB-100-COM KIT)
⑦ NOT USED
⑧ REMOTE CONTROL VALVE:
RAIN BIRD PESB (INCLUCED IN XCZ-PRB-100-COM KIT)
⑨ PVC SCH 40 FEMALE ADAPTOR
⑩ LATERAL PIPE
⑪ PVC SCH 80 NIPPLE (LENGTH AS REQUIRED)
⑫ PVC SCH 40 ELL
⑬ PVC SCH 80 NIPPLE (2-INCH LENGTH, HIDDEN) AND PVC SCH 40 ELL
⑭ PVC SCH 40 TEE OR ELL
⑮ MAINLINE PIPE
⑯ 3-INCH MINIMUM DEPTH OF 3/4-INCH WASHED GRAVEL
⑰ PVC SCH 80 NIPPLE, CLOSE (INCLUDED IN XCZ-PRB-100-COM KIT)

4 REMOTE CONTROL VALVE DRIP EMITTER AND BATTERY
NTS

NOTES:
1. HEAT BRAND LID W/GV. TYPICAL ON ALL BOXES.
2. GATE VALVE AND FITTINGS SHALL BE LINE SIZE UNLESS NOTED OTHERWISE.
3. PLACE $\frac{3}{4}$" DIA. ROCK PRIOR TO INSTALLATION OF VALVE BOX.
4. USE TEFLON TAPE ON ALL THREADED FITTINGS.

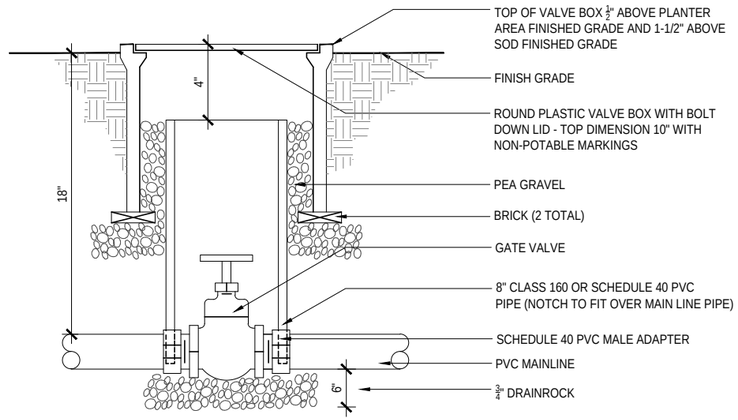

5 ISOLATION GATE VALVE
NTS

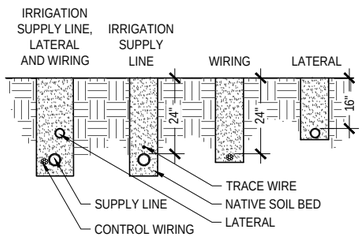

NOTES:
1. LAY IRRIGATION SUPPLY LINE ON NATIVE SOIL BED UNLESS SAND BED IS SPECIFIED
2. BUNDLE AND TAPE WIRE EVERY TEN FEET
3. PROVIDE 36" COVER OVER ALL PIPE AND PIPE SLEEVES UNDER ROADWAYS, PARKING LOTS, ENTRANCES TO PARKING LOTS AND FIRE ACCESS LANES PER NFPA 24, SECTION 10.44.
4. PROVIDE SEPARATE SLEEVES FOR ALL WIRES CROSSING UNDER ROADWAYS, PARKING LOTS AND FIRE ACCESS LANES PER NFPA 24, SECTION 10.44.

1 TRENCHING
1/2" = 1'-0"

NOTE:
IDENTIFY CONTROLLER AND STATION NUMBER.
IDENTIFY VALVE TYPE.
VALVE TYPE ABBREVIATIONS:
GV - GATE VALVE
RCV - REMOTE CONTROL VALVE
IV - ISOLATION VALVE
QCV - QUICK COUPLING VALVE
ALL LETTERS TO BE UNIFORM, 2" IN HEIGHT, AND PARALLEL/PERPENDICULAR TO LID EDGES.
IDENTIFY ALL VALVES WITH TAGS

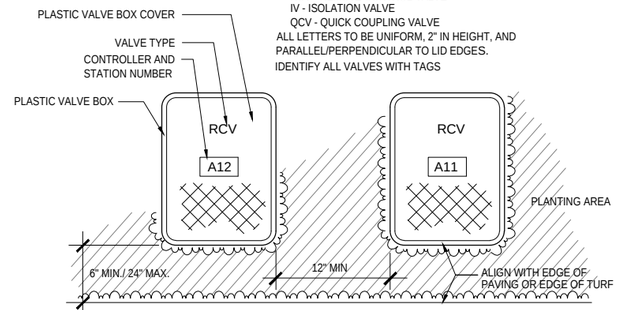

2 VALVE BOXES
NTS

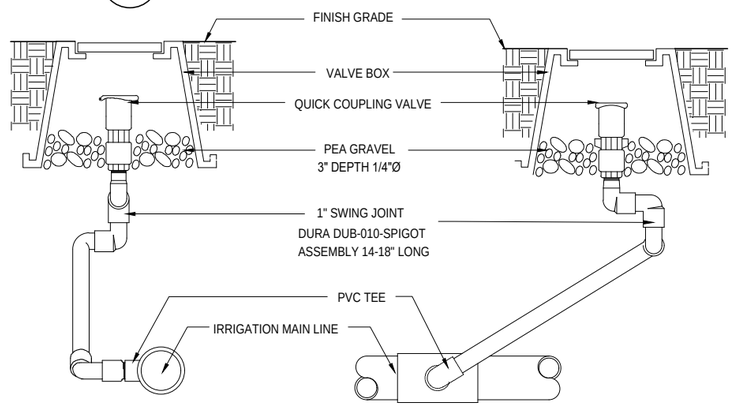

3 QUICK COUPLER VALVE
NTS

LICENSED LANDSCAPE ARCHITECT — Kevin G. Lindberg — No. 5015 — 03/31/2018 — Renewal Date — 10/26/2016 — Date — STATE OF CALIFORNIA

0" 1" — VERIFY SCALES BAR IS ONE INCH LONG ON FULL SIZE DRAWING. IF NOT ONE INCH LONG ON THIS DRAWING, ADJUST SCALES ACCORDINGLY

rhaa — SAN FRANCISCO — MILL VALLEY — 225 Miller Avenue, Mill Valley, CA 94941 — T 415 380 1414

RMC water and environment

REV	DATE	BY	APVD	DESCRIPTION

DESIGNED	MD
DRAWN	CA
CHECKED	BL

SUBMITTED: MARK TAKEMOTO CE-64369
APPROVED: STEVE CLARY CE-30318

SAUSALITO · MARIN CITY SANITARY DISTRICT

TREATMENT AND WET WEATHER FLOW UPGRADE

IRRIGATION DETAILS

DWG NO	L30-1
SHEET NO	78 OF 226
PROJ NO	055-006
DATE	NOVEMBER 2016

STRUCTURAL NOTES

GENERAL

1. ALL STRUCTURAL DRAWINGS SHALL BE USED IN CONJUNCTION WITH THE CIVIL, ARCHITECTURAL, MECHANICAL, ELECTRICAL, AND SHOP DRAWINGS AND THE PROJECT SPECIFICATIONS (IF ANY).
2. CONSTRUCTION SHALL MEET THE REQUIREMENTS OF THE 2013 CALIFORNIA BUILDING CODE (CBC). THE CBC SHALL GOVERN EXCEPT WHERE OTHER APPLICABLE CODES OR THESE DOCUMENTS ARE MORE RESTRICTIVE.
3. NOTHING SHOWN OR OMITTED FROM THESE DOCUMENTS SHALL RELIEVE THE CONTRACTOR FROM FULL COMPLIANCE WITH ALL APPLICABLE CODES AND ORDINANCES.
4. THE CONTRACTOR ALONE IS RESPONSIBLE FOR JOB SITE SAFETY. SITE REVIEW OF THE CONSTRUCTION BY THE ENGINEER IS TO DETERMINE CONFORMANCE WITH THE PLANS AND SPECIFICATIONS. IT DOES NOT ENCOMPASS SAFETY PROCEDURES OR OPERATIONS.
5. WITHOUT EXCLUSION OF ANY REFERENCE IN THE CONSTRUCTION DOCUMENTS TO ANY RULE OR REGULATION, THE ENGINEER IS NOT ASSUMING ANY PROVISIONS OF SUPERVISION OF CONSTRUCTION METHODS OR PROCESSES.
6. STRUCTURES HAVE BEEN DESIGNED FOR OPERATIONAL LOADS ON THE COMPLETED STRUCTURES. DURING CONSTRUCTION, BRACING OR SHORING SHALL SUPPORT STRUCTURES WHEREVER EXCESSIVE CONSTRUCTION LOADS MAY OCCUR.
7. SEE ALL OTHER PROJECT DOCUMENTS FOR REGLETS, PIPE SLEEVES, CONDUITS AND OTHER ITEMS TO BE EMBEDDED OR PASSED THROUGH THE CONCRETE.
8. PENETRATIONS THROUGH WALLS OR SLABS LESS THAN 12 INCHES IN DIAMETER MAY NOT BE SHOWN ON THE STRUCTURAL DRAWINGS. REFER TO ASSOCIATED DRAWINGS FOR LOCATIONS.
9. WRITTEN DIMENSIONS SHALL BE USED FOR CONSTRUCTION. DO NOT SCALE DRAWINGS.
10. STRUCTURAL DIMENSIONS CONTROLLED BY OR RELATED TO MECHANICAL AND/OR ELECTRICAL EQUIPMENT SHALL BE VERIFIED BY THE CONTRACTOR PRIOR TO CONSTRUCTION.
11. MECHANICAL AND ELECTRICAL EQUIPMENT SUPPORTS, ANCHORAGES, OPENINGS, RECESSES AND EMBEDMENTS NOT SHOWN ON THE DRAWINGS SHALL BE PROVIDED BY THE CONTRACTOR PRIOR TO PLACING CONCRETE.
12. DIMENSIONS INDICATED WITH AN * SHALL BE COORDINATED WITH MECHANICAL AND/OR ELECTRICAL DRAWINGS AND EQUIPMENT SUPPLIED.
13. ALL DIMENSIONS SHALL BE FIELD VERIFIED BY THE CONTRACTOR. SHOULD CONFLICTS OR INTERFERENCE OCCUR, THEY SHALL BE RESOLVED WITH THE ENGINEER. EXISTING FIELD CONDITIONS AT VARIANCE WITH THE PLANS SHALL BE BROUGHT TO THE ATTENTION OF THE ENGINEER BEFORE ANY WORK IS PERFORMED.
14. USE PERTINENT STANDARD DETAILS SHOWN, EVEN THOUGH THEY MAY NOT BE CALLED OUT AT LOCATIONS WHERE THEY APPLY.
15. CONDITIONS NOT SPECIFICALLY SHOWN OR INDICATED SHALL BE CONSTRUCTED SIMILAR TO DETAILS SHOWN FOR THE RESPECTIVE MATERIALS OR CONDITIONS.

DEFERRED SUBMITTALS

1. THE FOLLOWING PORTIONS OF THE PROJECT ARE DEFERRED SUBMITTAL ITEMS. DEFERRED SUBMITTALS LISTED BELOW ARE THE RESPONSIBILITY OF THE CONTRACTOR. DEFERRED SUBMITTAL ITEMS HAVE NOT BEEN DESIGNED BY THE ENGINEER OF RECORD. REFER TO CONTRACT DOCUMENTS FOR ADDITIONAL INFORMATION.

   a) FABRICATED ENGINEERED STRUCTURE - CLARIFIER COVER
   b) METAL STAIRS AND LANDINGS
   c) METAL PLANK GRATING AND PLATFORM SYSTEMS
   d) FRP COMPOSITE TRENCH COVERS
   e) HANDRAILS
   f) GUARDRAILS
   g) CALTRANS ST-40 BRIDGE RAIL
   h) HATCHES
   i) EQUIPMENT ANCHORAGE
   j) PIPE SUPPORTS
   k) CONDUIT SUPPORTS, INCLUDING CABLE TRAY SYSTEMS

2. UNLESS OTHERWISE NOTED, DEFERRED SUBMITTAL ITEMS SHALL BE STAMPED AND SIGNED BY A PROFESSIONAL CIVIL OR STRUCTURAL ENGINEER REGISTERED IN THE STATE OF CALIFORNIA.
3. DEFERRED SUBMITTAL ITEMS SHALL BE SUBMITTED TO THE OWNER FOR APPROVAL DURING THE CONSTRUCTION PHASE OF THE PROJECT.
4. DEFERRED SUBMITTAL ITEMS SHALL NOT BE INSTALLED UNTIL THE ENGINEER OF RECORD HAS REVIEWED THE SUBMITTAL DOCUMENTS AND INDICATED THAT THEY HAVE BEEN REVIEWED AND THAT THEY HAVE BEEN FOUND TO BE IN GENERAL CONFORMANCE WITH THE CONTRACT DOCUMENTS.
5. DEFERRED SUBMITTAL ITEMS SHALL NOT BE INSTALLED UNTIL THEIR DESIGN AND SUBMITTAL DOCUMENTS HAVE BEEN FAVORABLY REVIEWED BY THE OWNER.

DESIGN LOADS

1. LIVE LOADS:

USE OR OCCUPANCY	UNIFORM LOAD (psf)	CONCENTRATED LOAD (lbs)
WALKWAYS, STAIRWAYS	100	300 (1)
EQUIPMENT ROOM FLOORS	250	- (2)
ROOFS (NON-CONCRETE)	20 (3)	-
ROOFS (CONCRETE)	50	-
UNRESTRICTED VEHICULAR AREAS	640	- (4)
PROCESS AREA	200	-

(1) MINIMUM CONCENTRATED LOAD ON STAIR TRENDS ONLY.
(2) REFER TO EQUIPMENT MANUFACTURER'S DRAWINGS FOR CONCENTRATED LOAD.
(3) MAY BE REDUCED AS ALLOWED BY THE CBC.
(4) DESIGN LOAD CONFORMS TO THE REQUIREMENTS FOR AASHTO HL93 LANE LOADING WHERE APPLICABLE.

2. WIND:

BASIC WIND SPEED (3-SECOND GUST):	115
RISK CATEGORY:	III
WIND EXPOSURE CATEGORY:	D
INTERNAL PRESSURE COEFFICIENT	N/A
C&C PRESSURES FOR DEFERRED SUBMITTALS	N/A

3. SEISMIC:

SEISMIC IMPORTANCE FACTOR (I_E)	1.25
RISK CATEGORY:	III
MAPPED SPECTRAL RESPONSE ACCELERATIONS:	S_S = 1.500g, S_1 = 0.639g
SITE CLASS	B
SPECTRAL RESPONSE COEFFICIENTS:	S_{DS} = 1.000, S_{D1} = 0.426g
SEISMIC DESIGN CATEGORY:	D
BASIC SEISMIC-FORCE-RESISTING SYSTEM:	ORDINARY REINFORCED CONCRETE SHEAR WALLS
RESPONSE MODIFICATION FACTOR:	R_i = 2.0 & R_C = 1.0
ANALYSIS PROCEDURE USED:	CHAPTER 12 - EQUIVALENT LATERAL FORCE PROCEDURE CHAPTER 15 - WATER STORAGE AND WATER TREATMENT TANKS (ACI 350)

SNOW:

GROUND SNOW LOAD (P_g):	20 PSF
FLAT-ROOF SNOW LOAD (P_f):	30 PSF
SNOW EXPOSURE FACTOR (C_e):	N/A
SNOW LOAD IMPORTANCE FACTOR (I_s):	N/A
THERMAL FACTOR (C_t):	N/A

SITE WORK

1. A SOIL REPORT HAS BEEN PREPARED FOR THE PROJECT BY MILLER PACIFIC ENGINEERING GROUP. A COPY OF THE REPORT IS ON FILE AT THE OFFICE OF THE ENGINEER AND MAY BE REVIEWED WITH PROPER ADVANCED NOTIFICATION.
2. EXCAVATION FOR PADS AS SHOWN ON THE DRAWINGS: THE BOTTOMS OF ALL EXCAVATIONS SHALL BE LEVEL, TAMPED FIRM, CLEAN AND FREE FROM ALL DEBRIS OR FOREIGN MATTER.
3. OVER-EXCAVATION SHALL EXTEND LATERALLY BEYOND THE OUTSIDE EDGE OF FOOTINGS BY A MINIMUM OF 1/2 THE DEPTH OF OVER-EXCAVATION BELOW THE FOOTING OR 12-INCHES.
4. WHERE PRACTICABLE, SIDES OF FOOTINGS SHALL BE CUT NEAT AND CONCRETE POURED DIRECTLY AGAINST THE EXCAVATION. IF FORMING IS REQUIRED, THE TRENCHES SHALL BE EXCAVATED WIDE ENOUGH TO PERMIT THE ERECTION AND REMOVAL OF FORMS.
5. THE BOTTOM OF ALL EXCAVATIONS SHALL BE SCARIFIED TO A DEPTH OF 8 INCHES, MOISTURE CONDITIONED TO WITHIN 5 PERCENT (±1 PERCENT) OVER THE OPTIMUM MOISTURE CONTENT, AND COMPACTED TO A LEAST 89 PERCENT (±1 PERCENT) RELATIVE COMPACTION.
6. CLASS 2 AGGREGATE BASEROCK SHALL CONSIST OF MATERIAL FREE FROM DEBRIS AND ORGANIC OR OTHER DELETERIOUS MATERIALS. BACKFILL MATERIAL SHALL BE PLACED IN 8-INCH LAYERS, LEVELED, RAMMED AND TAMPED IN PLACE. COMPACTION OF ALL LAYERS SHALL BE A MINIMUM OF 95 PERCENT MAXIMUM DRY DENSITY IN ACCORDANCE WITH ASTM D1557.

SOIL PARAMETERS

1. FOUNDATION DESIGN CRITERIA:

	FOUNDATION TYPE	
	SHALLOW FOOTING	DRILLED PIERS
MINIMUM WIDTH / DIAMETER	12 IN.	Ø 18 IN.
MINIMUM EMBEDMENT	12 IN. (1)	5 FT.
ALLOWABLE BEARING PRESSURE		
DEAD+LIVE	5000 psf (2)(3)	-
BASE FRICTION COEFFICIENT	0.4	-
SKIN FRICTION (4)		
FILL		IGNORE
BEDROCK		4,000 psf
LATERAL PASSIVE RESISTANCE (5)		
FILL	-	IGNORE
BEDROCK	-	450 pcf (6)

(1) MAINTAIN MINIMUM 7-FEET HORIZONTAL CONFINEMENT FROM THE FACE OF ADJACENT SLOPES.
(2) MAY BE INCREASED BY 1/3 FOR TOTAL DESIGN LOADS (INCLUDING WIND AND SEISMIC).
(3) ALL FOUNDATION TO BEAR DIRECTLY ON FIRM BEDROCK.
(4) UPLIFT RESISTANCE IS EQUAL TO 80% OF TOTAL SKIN FRICTION.
(5) EQUIVALENT FLUID PRESSURE, NOT TO EXCEED 10 TIMES VALUE IN psf.
(6) APPLY VALUES OVER EFFECTIVE WIDTH OF 2 PIER DIAMETERS.

2. RETAINING WALL DESIGN CRITERIA:

LATERAL EARTH PRESSURE	UNRESTRAINED (1)(2)	RESTRAINED (1)(3)	
LEVEL	45 pcf	25 x H psf	
2:1 SLOPE	65 pcf	40 x H psf	
SEISMIC SURCHARGE (3)	15 x H PSF		
SOIL NAILS / TIEBACKS (7)	PHI (4)	C (5)	GAMMA (6)
FILL / COLLUVIUM / RESIDUAL SOIL	32	350 psf	130 pcf
CHERT / GREENSTONE BEDROCK	40	2,000 psf	140 pcf
MINIMUM DIAMETER HOLES	6 IN.		
SKIN FRICTION:			
FILL / COLLUVIUM / RESIDUAL SOIL	1,000 psf		
BEDROCK	3,000 psf		

(1) INTERPOLATE EARTH PRESSURE FOR INTERMEDIATE SLOPES.
(2) EQUIVALENT FLUID PRESSURE.
(3) RECTANGULAR UNIFORM PRESSURE DISTRIBUTION (H = HEIGHT OF WALL)
(4) ANGLE OF INTERNAL FRICTION (DEGREES), EFFECTIVE STRESS, (UNITLESS).
(5) APPARENT (EFFECTIVE) COHESION, FOR SEISMIC CONDITIONS 500 psf OF ADDITIONAL COHESION MAY BE INCLUDED.
(6) UNIT WEIGHT OF SOIL.
(7) SOIL NAILS AND TIEBACKS SHALL BE DESIGNED FOR LOAD TESTING UP TO 150% OF THE DESIGN LOAD.

CONCRETE

1. REINFORCED CONCRETE SHALL CONFORM TO ACI 318.
2. PORTLAND CEMENT SHALL CONFORM TO ASTM C150 TYPE II. ONE BRAND OF CEMENT SHALL BE USED THROUGHOUT THE WORK.
3. ALL AGGREGATES SHALL CONFORM TO ASTM C33. THE MAXIMUM SIZE AGGREGATE SHALL BE 1 INCH.
4. CONCRETE COMPRESSIVE STRENGTH SHALL MEET THE MINIMUM REQUIREMENTS LISTED BELOW.

LOCATION	MIN 28 DAY STRENGTH (psi)
STRUCTURAL CONCRETE	4,500
CONCRETE SIDEWALKS AND PAVEMENTS	3,000
CONCRETE FILL	2,500

5. ALL CONCRETE SHALL HAVE AIR ENTRAINMENT OF 4.0 ± 1.0 PERCENT.
6. CONSTRUCTION JOINTS SHALL NOT BE PLACED AT LOCATIONS OTHER THAN THOSE SHOWN ON THE DRAWINGS WITHOUT THE PRIOR APPROVAL OF THE ENGINEER OF RECORD.
7. ALL EXPOSED CORNERS OF CONCRETE SHALL HAVE 3/4" MINIMUM CHAMFER, UNLESS NOTED OTHERWISE.

CONCRETE REINFORCING

1. REINFORCING STEEL SHALL CONFORM TO THE LATEST EDITION OF ASTM SPECIFICATION A706 OR A615, GRADE 60.
2. REINFORCING STEEL FABRICATION SHALL BE IN ACCORDANCE WITH THE LATEST EDITION OF CRSI MANUAL OF STANDARD PRACTICE.
3. REINFORCING SHALL HAVE THE FOLLOWING CLEAR CONCRETE COVER, UNLESS OTHERWISE NOTED ON THE DRAWINGS.

CONDITION	COVER (INCHES)
UNFORMED SURFACES IN CONTACT WITH EARTH	3
FORMED SURFACES EXPOSED TO EARTH, WATER AND/OR WEATHER	2
BOTTOM SURFACES FOR SLAB OVER WATER	2
CONCRETE SURFACES FOR DRY CONDITIONS	
WALLS, SLABS AND JOISTS	1 1/2
BEAMS AND COLUMNS:	
PRIMARY REINFORCING	2
STIRRUPS, SPIRALS AND TIES	1 1/2

4. SPLICED BARS SHALL HAVE A MINIMUM CLASS B CONTACT LAP AS SPECIFIED IN THE LATEST EDITION OF ACI 315 DETAILING MANUAL AND ACI 318 UNLESS OTHERWISE NOTED ON THE DRAWINGS. WHERE SHOWN ON THE DRAWINGS, ld = DEVELOPMENT LENGTH AS DEFINED IN THE STANDARD DETAILS OF THESE DRAWINGS. HOOKS OF REINFORCING STEEL SHALL COMPLY WITH ACI 318.
5. WRITTEN SPACING AND LOCATION OF REINFORCING SHALL TAKE PRECEDENCE OVER DEPICTED SPACING AND LOCATION.
6. UNLESS OTHERWISE NOTED ON THE DRAWINGS, REINFORCING BARS SHOWN TERMINATING WITH A HOOK SHALL BE FABRICATED WITH A STANDARD HOOK AS DEFINED WITHIN ACI 318. WHERE SECTION THICKNESS DOES NOT ALLOW FOR FULL HOOK EXTENSION, TILT HOOK UNTIL HOOK FITS. ALTERNATIVELY CONTRACTOR MAY USE 180° HOOK OR TWO SMALLER HOOKED BARS OF EQUIVALENT AREA OF STEEL.
7. IN CASES WHERE REINFORCING BARS CANNOT BE EXTENDED AS FAR AS REQUIRED DUE TO THE LIMITED EXTENT OF THE ADJACENT CONCRETE STRUCTURE, THE BARS SHALL EXTEND AS FAR AS POSSIBLE AND BE TERMINATED WITH A STANDARD HOOK.
8. AT FOOTING CORNERS AND INTERSECTIONS, EXTEND BARS AROUND CORNERS AND LAP A MINIMUM OF 40 BAR DIAMETERS.

CONCRETE JOINTS

1. REINFORCING STEEL SHOWN IS FOR CLARITY ONLY. SEE PLANS AND SECTIONS FOR REINFORCING SIZES, SPACING, LOCATIONS AND DETAILS.
2. ALL SURFACES SHALL BE PREPARED IN ACCORDANCE WITH SPECIFICATION SECTION 03150.
3. EXCEPT WHERE OTHERWISE NOTED ON THE DETAILS JUNCTION BARS (JB) SHALL BE THE SAME SIZE AS THE LARGER OF WALL OR SLAB REINFORCING.
4. ALL LAP SPLICES SHALL BE CLASS B TENSION CONTACT LAP.
5. UNLESS OTHERWISE NOTED, SEALANT SHALL BE PROVIDED IN JOINTS WHERE SHOWN ON THE DRAWINGS AND WHERE INDICATED BY THE FOLLOWING:
   a) CONTROL JOINTS FOR WALLS AND SLABS IN LIQUID CONTAINMENT STRUCTURES SHALL HAVE SEALANT APPLIED TO THE LIQUID SIDE(S) OF THE JOINT.
   b) EXPANSION JOINTS SHALL HAVE SEALANT APPLIED TO BOTH SIDES OF THE JOINT, EXCEPT FOR THE SOIL SIDE OF A JOINT FOR A BASE SLAB.
   c) CONSTRUCTION JOINTS WILL NOT REQUIRE SEALANT, UNLESS OTHERWISE NOTED ON THE DRAWINGS.
6. UNLESS OTHERWISE NOTED, WATERSTOPS SHALL BE PROVIDED IN JOINTS WHERE SHOWN ON THE DRAWINGS AND WHERE INDICATED BY THE FOLLOWING:
   a) IN ALL JOINTS IN WALLS AND SLABS OF LIQUID CONTAINMENT STRUCTURES TO PREVENT EXFILTRATION OF LIQUID INTO SOIL OR DRY AREAS OF THE STRUCTURE.
   b) IN ALL BELOW-GRADE JOINTS IN WALLS AND SLABS TO PREVENT INFILTRATION OF GROUNDWATER INTO STRUCTURE.
7. WATERSTOP SHALL BE PLACED AT CENTER OF WALL OR SLAB, UNLESS OTHERWISE NOTED.

REGISTERED PROFESSIONAL ENGINEER RICHARD KENT THOMAS No. S 5320 EXP. 09/30/17 STRUCTURAL STATE OF CALIFORNIA 11/17/16

0" 1" VERIFY SCALES BAR IS ONE INCH LONG ON FULL SIZE DRAWING. IF NOT ONE INCH LONG ON THIS DRAWING, ADJUST SCALES ACCORDINGLY

TJC and ASSOCIATES, Inc.

RMC Water and Environment

REV	DATE	BY	APVD	DESCRIPTION

DESIGNED RKT
DRAWN ADM
CHECKED TJC

SUBMITTED: MARK TAKEMOTO, RMC PROJ ENGR, CE-64369
APPROVED: STEVE CLARY, RMC ENGR, CE-30318

SAUSALITO · MARIN CITY SANITARY DISTRICT

TREATMENT AND WET WEATHER FLOW UPGRADE

GENERAL NOTES

DWG NO S-1
SHEET NO 79 OF 226
PROJ NO 055-006
DATE NOVEMBER 2016

FILENAME: GS Sheets 11-17-16 04:52pm andria || XREFS: X-SMCSD-TBLK | RKT California | X-Site | X-Topo Survey | RKT_SIG |<<--
W:\TJCAA - 2008 Projects\108049 - RMC, SMCSD Headworks\108049 - Stru\ GS Sheets 11/17/16 12:29 andria XREFS: X-SMCSD-TBLK, RKT California, X-Site, X-Topo Survey
Last Saved By: andria 11-17-16 01:31pm

CONDUITS AND PIPES EMBEDDED IN CONCRETE

1. CONDUIT, PIPES, AND SLEEVES OF ANY MATERIAL NOT HARMFUL TO CONCRETE AND WITHIN LIMITATIONS OF THE PROJECT DRAWINGS AND SPECIFICATIONS, AND ACI 318 MAY BE PERMITTED TO BE EMBEDDED IN CONCRETE SUBJECT TO PRIOR APPROVAL BY THE ENGINEER OF RECORD, PROVIDED THEY ARE NOT CONSIDERED, BY THE ENGINEER OF RECORD, TO DISPLACE STRUCTURAL CONCRETE, EXCEPT AS PROVIDED HEREIN.
2. CONDUITS AND PIPES OF ALUMINUM SHALL NOT BE EMBEDDED IN STRUCTURAL CONCRETE.
3. CONDUITS AND PIPES, WITH THEIR FITTINGS, EMBEDDED WITHIN A COLUMN SHALL NOT DISPLACE MORE THAN 4-PERCENT OF THE AREA OF THE CROSS SECTION ON WHICH THE STRENGTH IS CALCULATED OR WHICH IS REQUIRED FOR FIRE PROTECTION. THE ENGINEER OF RECORD SHALL DETERMINE IF THE STRENGTH OF THE CONSTRUCTION HAS BEEN SIGNIFICANTLY IMPAIRED.
4. CONDUITS AND PIPES EMBEDDED WITHIN A SLAB, WALL, OR BEAM SHALL SATISFY THE FOLLOWING:
   a) THEY SHALL NOT BE LARGER IN OUTSIDE DIAMETER THAN 1/3 THE OVERALL THICKNESS OF SLAB, WALL, OR BEAM IN WHICH THEY ARE EMBEDDED.
   b) MINIMUM CENTER-TO-CENTER SPACING BETWEEN CONDUIT AND/OR PIPING RUNS SHALL BE 3 TIMES OUTSIDE DIAMETER OR WIDTH.
   c) THEY SHALL BE LOCATED IN SUCH A MANNER AS TO MAINTAIN A MINIMUM OF 1-INCH CLEAR SPACE BETWEEN THE EMBEDDED ITEM AND CONCRETE REINFORCEMENT.
   d) THEY SHALL NOT SIGNIFICANTLY IMPAIR THE STRENGTH OF THE CONSTRUCTION. THE ENGINEER OF RECORD SHALL DETERMINE IF THE STRENGTH OF THE CONSTRUCTION HAS BEEN SIGNIFICANTLY IMPAIRED.
5. NO LIQUIDS, GAS, OR VAPOR, EXCEPT WATER NOT EXCEEDING 90 DEGREES FAHRENHEIT NOR 50 PSI, SHALL BE PLACED IN THE PIPES UNTIL THE CONCRETE HAS ATTAINED ITS DESIGN STRENGTH.
6. IN SOLID SLABS, CONDUITS AND/OR PIPING SHALL BE PLACED BETWEEN THE TOP AND BOTTOM REINFORCEMENT AT THE CENTERLINE OF THE SLAB. AT A MINIMUM, THEY SHALL BE LOCATED IN SUCH A MANNER AS TO MAINTAIN A MINIMUM OF 1-INCH CLEAR SPACE BETWEEN THE EMBEDDED ITEM AND PRIMARY REINFORCEMENT.
7. CONCRETE COVER FOR PIPES, CONDUITS, AND FITTINGS SHALL NOT BE LESS THAN 2-INCHES FOR CONCRETE EXPOSED TO EARTH, CONTAINED LIQUIDS, OR WEATHER, NOR LESS THAN 1-INCH FOR CONCRETE NOT EXPOSED TO CONTAINED LIQUIDS, WEATHER OR IN CONTACT WITH GROUND.
8. REINFORCEMENT WITH AN AREA NOT LESS THAN 0.002 TIMES THE AREA OF CONCRETE SECTION SHALL BE PROVIDED NORMAL TO THE CONDUIT AND/OR PIPING.
9. CONDUITS AND/OR PIPING SHALL BE SO FABRICATED AND INSTALLED THAT CUTTING, BENDING, OR DISPLACEMENT OF REINFORCEMENT FROM ITS PROPER LOCATION WILL NOT BE REQUIRED.
10. PIPES PASSING THROUGH WALLS OF A LIQUID - CONTAINING STRUCTURE SHALL INCLUDE AN INTEGRAL WATERSTOP.

CONCRETE ANCHORS

1. CAST-IN ANCHOR RODS SHALL CONFORM TO ASTM F1554, GRADE 36.
2. POST-INSTALLED CONCRETE ANCHORS, INCLUDING ADHESIVE AND EXPANSION ANCHORS, SHALL CONFORM TO MANUFACTURER'S RECOMMENDATIONS AND THE APPROPRIATE ICC-ES AND/OR IAPMO-UES EVALUATION SERVICES REPORT (ER). ANCHORS WITHOUT AN ICC-ES AND/OR IAPMO-UES ER SHALL NOT BE USED.
3. UNLESS OTHERWISE INDICATED, ALL ADHESIVE AND EXPANSION ANCHORS FOR INSTALLATION IN CONCRETE SHALL HAVE SATISFIED THE REQUIREMENTS OF THE SIMULATED SEISMIC TESTS OF ACI 355.4 OR ACI 355.2, NO SUBSTITUTION SHALL BE ALLOWED.
4. CONTRACTOR SHALL LOCATE EXISTING REBAR USING NON-DESTRUCTIVE METHODS PRIOR TO DRILLING HOLES FOR POST-INSTALLED ANCHORS. ADJUST SPACING OF ANCHORS TO MISS EXISTING REINFORCING. TOTAL NUMBER OF ANCHORS PROVIDED SHALL BE EQUAL TO THAT SHOWN ON THE DRAWINGS.
5. ADHESIVE ANCHORS SHALL CONSIST OF A TWO-COMPONENT RESIN ADHESIVE. THE PACKAGES CONTAINING EACH COMPONENT SHALL BE ATTACHED TO A DISPENSING MANIFOLD. AN AUGER STYLE NOZZLE SHALL BE ATTACHED FOR PROPER MIXING OF THE ADHESIVE COMPONENTS. WHERE THREADED RODS ARE REQUIRED, RODS SHALL CONFORM TO ASTM A193 GRADE B7. WHERE STAINLESS STEEL IS CALLED FOR ON THE DRAWINGS, CONTRACTOR SHALL USE ALLOY GROUP 1 TYPE 304 CONDITION CW.

SPECIAL INSPECTION

1. SPECIAL INSPECTION SHALL BE CONDUCTED IN ACCORDANCE WITH THE REQUIREMENTS SET FORTH IN CHAPTER 17 OF THE CBC. UNLESS OTHERWISE NOTED IN THE PROJECT SPECIFICATIONS, SPECIAL INSPECTION SHALL BE PROVIDED BY AND PAID FOR BY THE DISTRICT. THE FOLLOWING ITEMS, AS A MINIMUM, SHALL RECEIVE SPECIAL INSPECTION:

ITEM	STRUCTURAL STEEL INSPECTIONS AND VERIFICATION	FREQUENCY	
		CONTINUOUS	PERIODIC
1.	MATERIAL VERIFICATION OF STRUCTURAL STEEL:	---	---
	A. IDENTIFICATION MARKINGS TO CONFORM TO ASTM STANDARDS SPECIFIED IN THE APPROVED CONSTRUCTION DOCUMENTS.		X
	B. MANUFACTURERS' CERTIFIED MILL TEST REPORTS.		X
2.	MATERIAL VERIFICATION OF WELD FILLER MATERIALS:	---	---
	A. IDENTIFICATION MARKINGS TO CONFORM TO AWS SPECIFICATION IN THE APPROVED CONSTRUCTION DOCUMENTS.		X
	B. MANUFACTURER'S CERTIFICATE OF COMPLIANCE REQUIRED.		X
3.	INSPECTION OF WELDING:	---	---
	A. STRUCTURAL STEEL:	---	---
	1) COMPLETE AND PARTIAL PENETRATION GROOVE WELDS.	X	
	2) MULTI-PASS FILLET WELDS.	X	
	3) SINGLE-PASS FILLET WELDS > 5/16"	X	
	4) SINGLE-PASS FILLET WELDS ≤ 5/16"		X
	5) FLOOR AND ROOF DECK WELDS.		X
	B. REINFORCING STEEL:		
	1) VERIFICATION OF WELDABILITY OF REINFORCING STEEL OTHER THAN ASTM A 706.		X
	2) BOUNDARY ELEMENTS OF SPECIAL REINFORCED CONCRETE SHEAR WALLS AND SHEAR REINFORCEMENT.	X	
	3) SHEAR REINFORCEMENT.	X	
	4) OTHER REINFORCING STEEL.		X

ITEM	CONCRETE INSPECTIONS AND VERIFICATION	FREQUENCY	
		CONTINUOUS	PERIODIC
1.	INSPECTION OF REINFORCING STEEL AND PLACEMENT.		X
2.	INSPECTION OF REINFORCING STEEL WELDING IN ACCORDANCE WITH TABLE 1704.3, ITEM 5B.	X	
3.	INSPECTION OF ANCHORS CAST IN CONCRETE WHERE ALLOWABLE LOADS HAVE BEEN INCREASED OR WHERE STRENGTH DESIGN IS USED.		X
4.	INSPECTION OF ANCHORS POST-INSTALLED IN HARDENED CONCRETE MEMBERS.	X	
5.	VERIFYING USE OF REQUIRED DESIGN MIX.		X
6.	AT THE TIME FRESH CONCRETE IS SAMPLED TO FABRICATE SPECIMENS FOR STRENGTH TESTS, PERFORM SLUMP AND AIR CONTENT TESTS, AND DETERMINE THE TEMPERATURE OF THE CONCRETE.	X	
7.	INSPECTION OF CONCRETE AND SHOTCRETE PLACEMENT FOR PROPER APPLICATION TECHNIQUES.	X	
8.	INSPECTION FOR MAINTENANCE OF SPECIFIED CURING TEMPERATURE AND TECHNIQUES.		X
9.	INSPECT FORMWORK FOR SHAPE, LOCATION AND DIMENSIONS OF THE CONCRETE MEMBER BEING FORMED.		X
	SPECIAL PROVISIONS FOR SEISMIC RESISTANCE		
10.	VERIFY SUBMITTAL OF CERTIFIED MILL TEST REPORTS FOR EACH SHIPMENT OF REINFORCING STEEL USED IN BOUNDARY ELEMENTS OF SPECIAL REINFORCED CONCRETE SHEAR WALLS.		X
11.	TEST ASTM A 615 REINFORCING STEEL USED IN WALL BOUNDARY ELEMENTS OF SHEAR WALLS IN STRUCTURES ASSIGNED TO SEISMIC DESIGN CATEGORY D, E OR F, PER ACI 318.		X
12.	TEST ASTM A 615 REINFORCING STEEL THAT IS TO BE WELDED, CHEMICAL TESTS SHALL BE PERFORMED TO DETERMINE WELDABILITY IN ACCORDANCE WITH SECTION 3.5.2 OF ACI 318.		X

ITEM	WATERSTOP INSPECTIONS AND VERIFICATION	FREQUENCY	
		CONTINUOUS	PERIODIC
1.	INSPECTION OF FIELD WELDS OF WATERSTOP.		X
2.	MANUFACTURER SHALL PROVIDE FIELD TRAINING OF WATERSTOP WELDERS AND SPECIAL INSPECTORS.	---	---

ITEM	FOUNDATION INSPECTIONS AND VERIFICATION	FREQUENCY	
		CONTINUOUS	PERIODIC
	SOILS		
1.	VERIFY SUBGRADE MATERIALS BELOW THE FOOTING FOR DESIGN BEARING CAPACITY.		X
2.	VERIFY DEPTH OF EXCAVATION AND TYPE OF SUBGRADE MATERIALS REACHED.		X
3.	PERFORM CLASSIFICATION AND COMPACTION TESTING OF CONTROLLED BACKFILL MATERIALS.		X
4.	VERIFY MATERIALS USED, LAYERED THICKNESSES AND COMPACTION OF BACK FILLS.	X	
5.	VERIFY THE SUBGRADE AND SITE PREPARATIONS FOR CONTROLLED FILL.		X
	PIER FOUNDATIONS		
6.	OBSERVE DRILLING OPERATIONS TO MONITOR AND RECORD - DRILLED LENGTHS, DIAMETERS AND BELL SIZE (IF APPLICABLE) FOR EACH PIER.	X	
7.	VERIFY PLACEMENT LOCATIONS AND PLUMBNESS, CONFIRM PIER DIAMETERS, BELL DIAMETERS (IF APPLICABLE), LENGTHS, EMBEDMENT INTO BEDROCK (IF APPLICABLE) AND ADEQUATE END BEARING STRATA CAPACITY.	X	
8.	FOR CONCRETE PIERS, PERFORM ADDITIONAL INSPECTIONS IN ACCORDANCE WITH "CONCRETE INSPECTIONS AND VERIFICATION".	---	---

ITEM	INSPECTIONS AND VERIFICATION FOR SEISMIC RESISTANCE IN OTHER BUILDING SYSTEMS	FREQUENCY	
		CONTINUOUS	PERIODIC
	MECHANICAL & ELECTRICAL COMPONENTS		
1.	ANCHORAGE OF ELECTRICAL EQUIPMENT FOR EMERGENCY OR STANDBY POWER SYSTEMS IN STRUCTURES ASSIGNED TO SEISMIC DESIGN CATEGORY C, D, E OR F.		X
2.	PIPING SYSTEMS INTENDED TO CARRY FLAMMABLE, COMBUSTIBLE OR HIGHLY TOXIC CONTENTS AND THEIR ASSOCIATED MECHANICAL UNITS IN STRUCTURES ASSIGNED TO SEISMIC DESIGN CATEGORY C, D, E OR F.		X
3.	HVAC DUCTWORK THAT WILL CONTAIN HAZARDOUS MATERIALS IN STRUCTURES ASSIGNED TO SEISMIC DESIGN CATEGORY C, D, E OR F.		X
4.	VIBRATION ISOLATION SYSTEMS OF EQUIPMENT IN STRUCTURES ASSIGNED TO SEISMIC DESIGN CATEGORY C, D, E OR F WHERE THE CONSTRUCTION DOCUMENTS REQUIRE A NOMINAL CLEARANCE OF 0.25 INCHES (6.4 MM) OR LESS BETWEEN THE EQUIPMENT SUPPORT FRAME AND RESTRAINT.		X
	STORAGE RACKS AND ACCESS FLOORS		
1.	INSPECT THE ANCHORAGE OF ACCESS FLOORS AND STORAGE RACKS 8 FEET (2438 MM) OR GREATER IN HEIGHT IN STRUCTURES ASSIGNED TO SEISMIC DESIGN CATEGORY D, E OR F.		X

NOTATION:
"X" DENOTES EITHER CONTINUOUS OR PERIODIC INSPECTIONS.
"—" DENOTES AN ACTIVITY THAT IS EITHER A ONE TIME ACTIVITY OR ONE WHOSE FREQUENCY IS DEFINED IN SOME OTHER MANNER

DEFINITIONS:
CONTINUOUS - SPECIAL INSPECTION BY THE SPECIAL INSPECTOR WHO IS PRESENT WHEN AND WHERE THE WORK TO BE INSPECTED IS BEING PERFORMED (CBC, SECTION 202)

PERIODIC - SPECIAL INSPECTION BY THE SPECIAL INSPECTOR WHO IS INTERMITTENTLY PRESENT WHERE THE WORK TO BE INSPECTED IS BEING PERFORMED (CBC, SECTION 202)

SPECIAL INSPECTOR - A QUALIFIED PERSON EMPLOYED OR RETAINED BY THE OWNER AND APPROVED BY THE AUTHORITY HAVING JURISDICTION AS HAVING THE COMPETENCE NECESSARY TO INSPECT A PARTICULAR TYPE OF CONSTRUCTION REQUIRING SPECIAL INSPECTION.

STATE OF CALIFORNIA — STRUCTURAL — No. S 5320 — EXP. 09/30/17 — PROFESSIONAL ENGINEER
11/17/16

0" 1" VERIFY SCALES — BAR IS ONE INCH LONG ON FULL SIZE DRAWING. IF NOT ONE INCH LONG ON THIS DRAWING, ADJUST SCALES ACCORDINGLY

TJC and ASSOCIATES, INC.

RMC Water and Environment

REV	DATE	BY	APVD	DESCRIPTION

DESIGNED RKT
DRAWN ADM
CHECKED

SUBMITTED: MARK TAKEMOTO, RMC PROJ ENGR, CE-64369
APPROVED: STEVE CLARY, RMC ENGR, CE-30318

SAUSALITO · MARIN CITY SANITARY DISTRICT

TREATMENT AND WET WEATHER FLOW UPGRADE

GENERAL NOTES

DWG NO S-2
SHEET NO 80 OF 226
PROJ NO 055-006
DATE NOVEMBER 2016

FILENAME: GS Sheets 11-17-16 04:53pm andria || XREFS: X-SMCSD-TBLK | RKT California | X-Site | X-Topo Survey | RKT_SIG |<<--

W:\1JCAA - 2008 Projects\108049 - RMC, SMCSD Headworks\108049 - Stru\ GS Sheets 11/17/16 12:29 andria XREFS: X-SMCSD-TBLK, RKT California, X-Site, X-Topo Survey

Last Saved By: andria 11-17-16 01:31pm

ABBREVIATIONS:

Ø	DIAMETER	f'c	CONCRETE COMPRESSIVE STRENGTH	PJF	PREMOLDED JOINT FILLER
AB	ANCHOR BOLT	f'm	MASONRY PRISM STRENGTH	PL	PLATE
ACI	AMERICAN CONCRETE INSTITUTE	FAB	FABRICATE (OR, ED)	PLYWD	PLYWOOD
ADDL	ADDITIONAL	FD	FLOOR DRAIN	PM	PRESSED METAL
AISC	AMERICAN INSTITUTE OF STEEL CONSTRUCTION	FDN	FOUNDATION	PRCST	PRECAST
AISI	AMERICAN IRON AND STEEL INSTITUTE	FHMS	FLATHEAD MACHINE SCREW	PREFAB	PRE-FABRICATED
AITC	AMERICAN INSTITUTE OF TIMBER CONSTRUCTION	FHWS	FLATHEAD WOOD SCREW	PSF	POUNDS PER SQUARE FOOT
AL	ALUMINUM	FIG	FIGURE	PSI	POUNDS PER SQUARE INCH
ALT	ALTERNATE(ING)	FIN	FINISH (ED)	PT	POINT
APPROX	APPROXIMATE(LY)	FL	FLOOR	PT	PRESSURE TREATED
AR	ANCHOR ROD	FLEX	FLEXIBLE	PVC	POLYVINYL CHLORIDE
ARND	AROUND	FRP	FIBERGLASS REINFORCED PLASTIC	PVMT	PAVEMENT
ASCE	AMERICAN SOCIETY OF CIVIL ENGINEERS	FTG	FOOTING	R	RISER
ASTM	ASTM INTERNATIONAL	FURN	FURNISHED	RAD	RADIUS
ATR	ALL-THREAD ROD	GA	GAGE	RC	REINFORCED CONCRETE
AWS	AMERICAN WELDING SOCIETY	GALV	GALVANIZED	RD	ROOF DRAIN
B TO B	BACK TO BACK	GALVS	GALVANIZED STEEL	REF	REFERENCE / REFER
BEJS	BRIDGE EXPANSION JOINT SYSTEM	GLB	GLUE LAMINATED BEAM	REINF	REINFORCE (D, ING)
BLDG	BUILDING	GR	GUARD RAIL	REQD	REQUIRED
BLK	BLOCK(ING)	GRTG	GRATING	REV	REVISION
B.O.	BOTTOM OF	H.A.S.	HEADED ANCHOR STUD	RM	ROOM
BOT	BOTTOM	HD	HAND	RO	ROUGH OPENING
BRG	BEARING	HDR	HEADER	RT	RIGHT
BTWN	BETWEEN	HDWD	HARDWOOD	SB	SOLID BLOCKING
CBC	CALIFORNIA BUILDING CODE	HGR	HANGER	SCHED	SCHEDULE
C/C	CENTER TO CENTER	HGT	HEIGHT	SECT	SECTION
CHKD	CHECKERED	HOR	HORIZONTAL	SHT	SHEET
CIDH	CAST IN DRILLED HOLE	HP	HIGH POINT	SIM	SIMILAR
CIRC	CIRCUMFERENTIAL	HR	HANDRAIL	SL	SLOPE
CJ	CONSTRUCTION JOINT	HS	HIGH STRENGTH	SLNT	SEALANT
CL	CENTERLINE	HSS	HOLLOW STRUCTURAL SECTION	SP	SPACE (S, ED)
CLG	CEILING	IAPMO-UES	INTERNATIONAL ASSOCIATION OF PLUMBING AND MECHANICAL OFFICIALS UNIFORM EVALUATION SERVICES	SPEC	SPECIFICATION, SPECIFIED
CLKG	CAULKING	ICC	INTERNATIONAL CODE COUNCIL	SQ	SQUARE
CLR	CLEAR	ID	INSIDE DIAMETER	SS	STAINLESS STEEL
CMU	CONCRETE MASONRY UNIT	IE	INVERT ELEVATION	SSMH	SANITARY SEWER MANHOLE
COL	COLUMN	I.F.	INSIDE FACE	STD	STANDARD
CONC	CONCRETE	INT	INTERIOR	STIF	STIFFENER
CONN	CONNECTION	I.P.S.	IRON PIPE SIZE	STIR.	STIRRUP (S)
CONST	CONSTRUCTION	JB	JUNCTION BAR(S)	STL	STEEL
CONT	CONTINUOUS	JT	JOINT(S)	STRUC	STRUCTURE (S, URAL)
CRS	COURSE(S)	JT FLR	JOINT FILLER	STWY	STAIRWAY
CRSI	CONCRETE REINFORCING STEEL INSTITUTE	L_d	DEVELOPMENT LENGTH	SYM	SYMMETRICAL
CSK	COUNTERSINK	L_{dh}	DEVELOPMENT LENGTH STANDARD HOOK	T	TREAD (S)
CTJ	CONTROL JOINT	L_s	CLASS B TENSION LAP SPLICE	T&B	TOP AND BOTTOM
CTR	CENTER (ED)	LG	LONG	T&G	TONGUE AND GROOVE
D	DEEP, DEPTH	LLH	LONG LEG HORIZONTAL	TD	TRENCH DRAIN
d	PENNY	LLV	LONG LEG VERTICAL	THD	THREADED
d_b	BAR DIAMETER	LNTL	LINTEL	THK	THICK (NESS)
DEMO	DEMOLITION	LONG.	LONGITUDINAL	TJ	TOOLED JOINT
DET	DETAIL	LP	LOW POINT	T.O.	TOP OF
DF	DOUGLAS FIR	LT	LEFT	TOC	TOP OF CONCRETE
DIA	DIAMETER	LW	LIGHTWEIGHT	TOS	TOP OF STEEL
DIAG	DIAGONAL	MAS	MASONRY	T.O.W.	TOP OF WALL
DIM	DIMENSION	MATL	MATERIAL	TPER	THERMOPLASTIC ELASTOMERIC RUBBER
DL	DEAD LOAD	MAX	MAXIMUM	TRNSV	TRANSVERSE
DN	DOWN	MB	MACHINE BOLT	TYP	TYPICAL
DO.	DITTO	MCJ	MASONRY CONTROL JOINT	UON	UNLESS OTHERWISE NOTED
DP	DAMPROOFING	MECH	MECHANICAL	VERT	VERTICAL
DR	DRAIN	MFR	MANUFACTURER	VIF	VERIFY IN FIELD
DWG(S)	DRAWING(S)	MIN	MINIMUM	VR	VAPOR RETARDER
DWL(S)	DOWEL(S)	MO	MASONRY OPENING	W	WIDE
(E)	EXISTING	MTL	METAL	W/	WITH
EA	EACH	NAAMM	NATIONAL ASSOCIATION OF ARCHITECTURAL METAL MANUFACTURERS	WF	WIDE FLANGE
EB	EXPANSION BOLT	NIC	NOT IN CONTRACT	W/O	WITHOUT
ECC	ECCENTRIC	NOM	NOMINAL	WD	WIDTH / WOOD
ED	EQUIPMENT DRAIN	NSG	NON-SHRINK GROUT	WP	WORKING POINT
EF	EACH FACE	NTS	NOT TO SCALE	WPG	WATERPROOFING
EL	ELEVATION	O/E	OR EQUAL	WS	WATERSTOP
ELEC	ELECTRICAL	OC	ON CENTER	WT	WEIGHT
EMBED	EMBEDMENT	OD	OUTSIDE DIAMETER	WWF	WELDED WIRE FABRIC
EN	EDGE NAILING	O.F.	OUTSIDE FACE		
EOR	ENGINEER OF RECORD	OPNG(S)	OPENING(S)		
EQ	EQUAL (LY)	OPP	OPPOSITE		
EQUIP	EQUIPMENT	OPP HD	OPPOSITE HAND		
EQUIV	EQUIVALENT	OPT	OPTION (AL)		
ES	EACH SIDE				
ESR	EVALUATION SERVICE REPORT				
ETC	ETCETERA				
EW	EACH WAY				
EXP	EXPANSION				
EXP JT	EXPANSION JOINT(S)				
EXST	EXISTING				
EXT	EXTERIOR				
EY	EPOXY				

ABBREVIATION NOTES:

1. ABBREVIATIONS AND DESIGNATIONS FOR STEEL MEMBERS MAY BE FOUND IN THE CURRENT STEEL CONSTRUCTION MANUAL BY AISC.
2. ABBREVIATIONS OF TECHNICAL SOCIETIES AND TRADE ASSOCIATIONS MAY BE FOUND IN THE SPECIFICATIONS
3. WELDING SYMBOLS AND ABBREVIATIONS MAY BE FOUND IN AWS 2.4.
4. ABBREVIATIONS LISTED ARE FOR USE WITH STRUCTURAL DRAWINGS ONLY. SOME ABBREVIATIONS LISTED MAY NOT BE USED ON THE PLANS.

LEGEND:

GRATING: 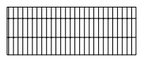 SPAN DIRECTION WHERE APPLICABLE

SELECT FILL: 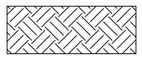

PLANK GRATING: 

UNDISTURBED EARTH: 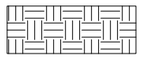

PAVEMENT OR SIDEWALK: 

VOID FORM: 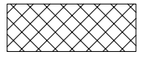

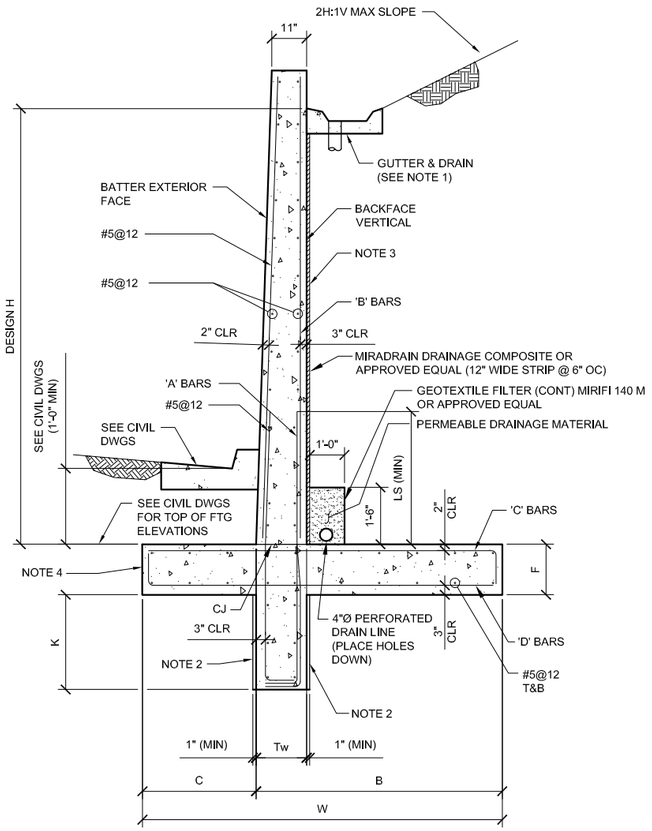

TABLE OF DIMENSIONS AND REINFORCING STEEL INFORMATION						
DESIGN H (MAX)	4'	6'	8'	10'	12'	14'
W	4'-6"	5'-9"	7'-0"	8'-6"	11'-1"	12'-7"
C	1'-0"	1'-4"	1'-8"	2'-0"	2'-6"	4'-0"
B	3'-6"	4'-5"	5'-4"	6'-6"	8'-7"	8'-7"
F	1'-4"	1'-4"	1'-4"	1'-4"	1'-4"	1'-6"
Tw (NOTE 2)	1'-1" MIN	1'-2" MIN	1'-3" MIN	1'-4" MIN	1'-5" MIN	1'-6" MIN
K	1'-0"	2'-0"	3'-0"	4'-0"	5'-1"	5'-9"
BATTER	1/2:12	1/2:12	1/2:12	1/2:12	1/2:12	1/2:12
'A' BARS	#5@12	#5@12	#5@6	#5@6	#5@6	#7@6
'B' BARS	#5@12	#5@12	#5@12	#5@12	#5@12	#5@6
'C' BARS	#5@12	#5@12	#5@6	#5@6	#7@6	#7@6
'D' BARS	#5@12	#5@12	#5@12	#5@12	#5@6	#5@6

NOTES:

1. PROVIDE GUTTER AND GUTTER OUTLET PER PROJECT SPECIFICATIONS.
2. WIDTH OF SHEAR KEY SHALL BE Tw + 2" MINIMUM (1" MINIMUM EACH FACE) TO PROVIDE 3" MINIMUM CONCRETE COVER TO REINFORCING STEEL. PLACE CONCRETE FOR SHEAR KEY AGAINST UNDISTURBED MATERIAL EXCEPT AS PERMITTED BY THE ENGINEER.
3. THICKNESS OF WALL IS CONTROLLED BY FINAL WALL HEIGHT, TOP OF WALL THICKNESS AND BATTER.
4. PLACE CONCRETE IN TOE AGAINST UNDISTURBED MATERIAL EXCEPT AS PERMITTED BY THE ENGINEER.

RETAINING WALL DETAIL 02006 VAR NTS

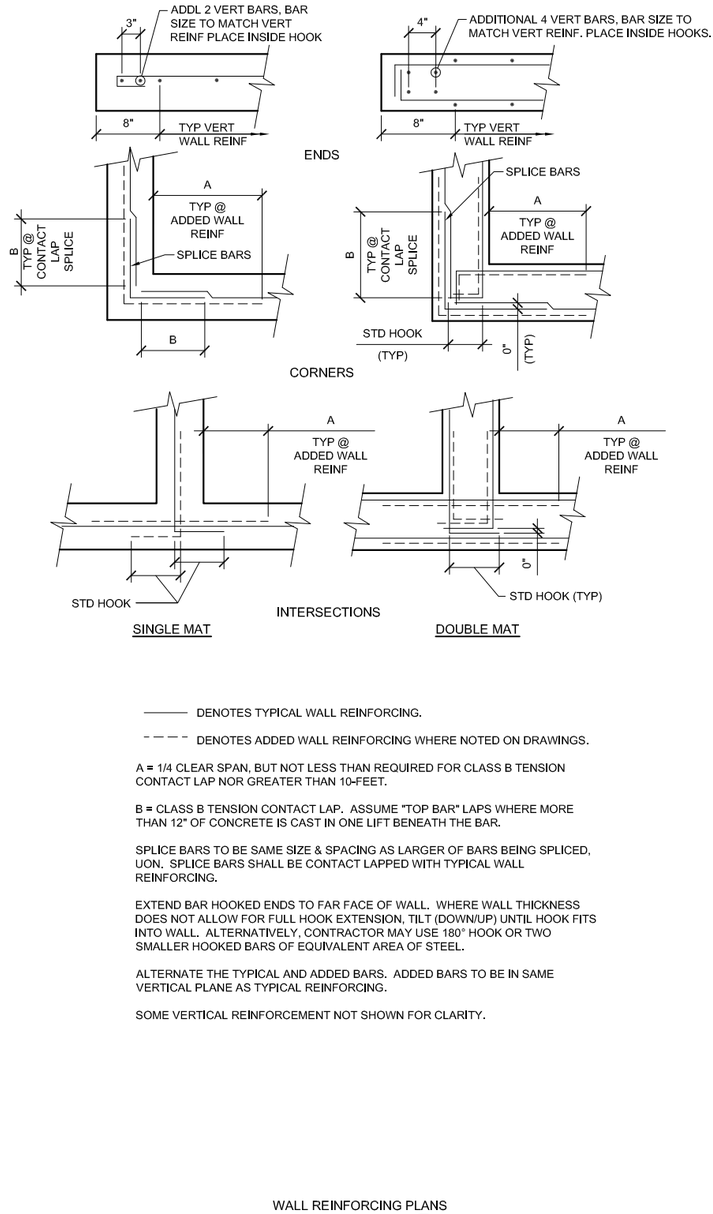

——— DENOTES TYPICAL WALL REINFORCING.

– – – – DENOTES ADDED WALL REINFORCING WHERE NOTED ON DRAWINGS.

A = 1/4 CLEAR SPAN, BUT NOT LESS THAN REQUIRED FOR CLASS B TENSION CONTACT LAP NOR GREATER THAN 10-FEET.

B = CLASS B TENSION CONTACT LAP. ASSUME "TOP BAR" LAPS WHERE MORE THAN 12" OF CONCRETE IS CAST IN ONE LIFT BENEATH THE BAR.

SPLICE BARS TO BE SAME SIZE & SPACING AS LARGER OF BARS BEING SPLICED, UON. SPLICE BARS SHALL BE CONTACT LAPPED WITH TYPICAL WALL REINFORCING.

EXTEND BAR HOOKED ENDS TO FAR FACE OF WALL. WHERE WALL THICKNESS DOES NOT ALLOW FOR FULL HOOK EXTENSION, TILT (DOWN/UP) UNTIL HOOK FITS INTO WALL. ALTERNATIVELY, CONTRACTOR MAY USE 180° HOOK OR TWO SMALLER HOOKED BARS OF EQUIVALENT AREA OF STEEL.

ALTERNATE THE TYPICAL AND ADDED BARS. ADDED BARS TO BE IN SAME VERTICAL PLANE AS TYPICAL REINFORCING.

SOME VERTICAL REINFORCEMENT NOT SHOWN FOR CLARITY.

WALL REINFORCING PLANS DETAIL 03001 VAR NTS

FILENAME: GS Sheets 11-17-16 04:54pm andria || XREFS:| X-SMCSD-TBLK | RKT California | X-Site | X-Topo Survey | RKT_SIG |<--

W:\TJCAA - 2008 Projects\108049 - RMC, SMCSD Headworks\108049 - Stru\ GS Sheets 11/17/16 12:29 andria XREFS: X-SMCSD-TBLK, RKT California, X-Site, X-Topo Survey

Last Saved By: andria 11-17-16 01:31pm



11/17/16

0" 1" VERIFY SCALES BAR IS ONE INCH LONG ON FULL SIZE DRAWING. IF NOT ONE INCH LONG ON THIS DRAWING, ADJUST SCALES ACCORDINGLY

TJC of AMADOR, INC.

RMC Water and Environment

REV	DATE	BY	APVD	DESCRIPTION

DESIGNED RKT
DRAWN ADM
CHECKED TJC

SUBMITTED: MARK TAKEMOTO, RMC PROJ ENGR, CE-64369

APPROVED: STEVE CLARY, RMC ENGR, CE-30318

SAUSALITO · MARIN CITY SANITARY DISTRICT

TREATMENT AND WET WEATHER FLOW UPGRADE

ABBREVIATIONS & STANDARD DETAILS

DWG NO S-3
SHEET NO 81 OF 226
PROJ NO 055-006
DATE NOVEMBER 2016

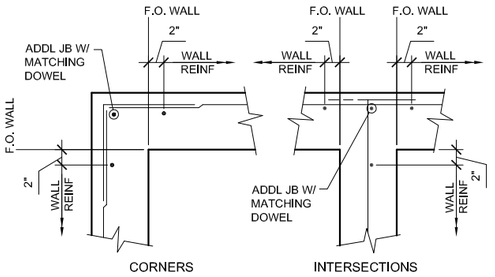

SINGLE MAT

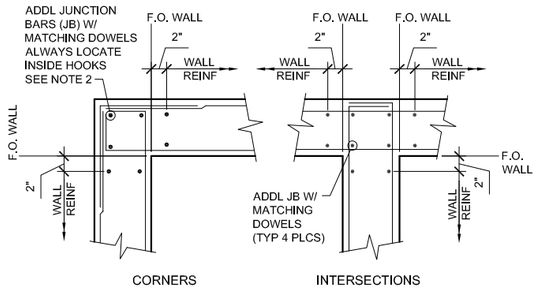

DOUBLE MAT

NOTES:

1. REINFORCING IS SHOWN FOR CLARITY ONLY. SEE PLANS AND SECTIONS FOR REINFORCING SIZES, SPACING, LOCATIONS AND DETAILS.
2. JUNCTION BARS SHALL BE SAME SIZE AS THE WALL VERTICAL REINFORCING EXCEPT WHERE OTHERWISE NOTED ON THE DETAILS OR DRAWINGS. THESE ARE ADDITIONAL BARS TO THOSE CALLED OUT FOR WALLS.
3. SEE PLANS AND SECTIONS FOR LOCATIONS OF JOINTS. SEE DETAIL 03002 - FOR BALANCE OF INFORMATION.
4. UNLESS OTHERWISE NOTED, WITHIN CONTRACT DRAWINGS, REINFORCING BARS SHALL TERMINATE WITH A STANDARD HOOK. WHERE SECTION THICKNESS DOES NOT ALLOW FOR FULL HOOK EXTENSION, TILT HOOK UNTIL IT FITS. ALTERNATIVELY CONTRACTOR MAY USE 180° HOOK OR TWO SMALLER HOOKED BARS OF EQUIVALENT AREA OF STEEL.

WALL REINFORCING PLANS
DETAIL 03001/A
NTS VAR

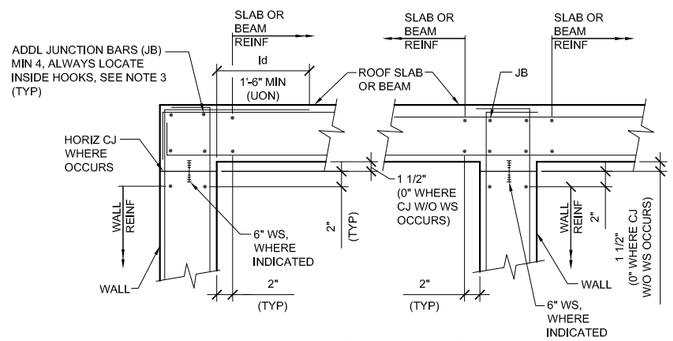

WALL TO TOP SLAB (SECTION)

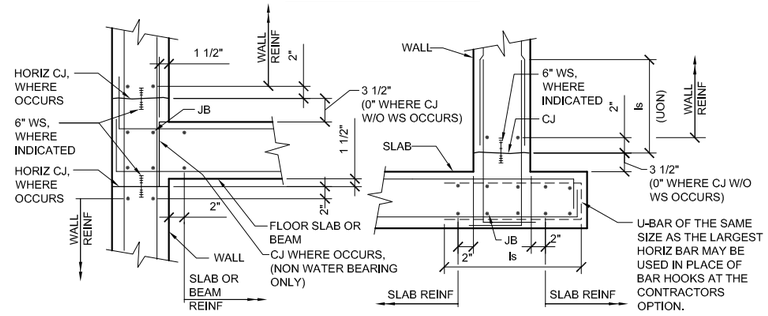

WALL TO INTERMEDIATE SLAB (SECTION)

WALL TO BOTTOM SLAB (SECTION)

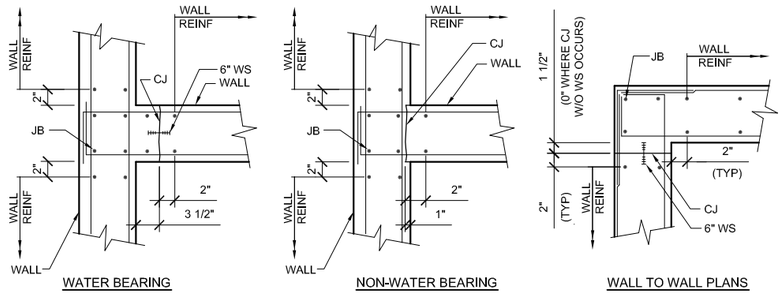

WATER BEARING

NON-WATER BEARING

WALL TO WALL PLANS

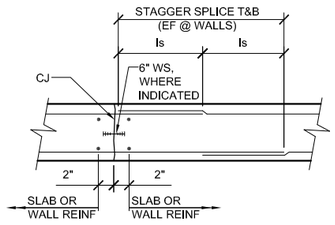

SLAB OR WALL CONTINUATION

CONSTRUCTION JOINT (CJ)
DETAIL 03002
NTS VAR

CONSTRUCTION JOINT NOTES:

1. REINFORCING SHOWN IS FOR CLARITY ONLY. SEE PLANS AND SECTIONS FOR REINFORCING SIZES, SPACING, LOCATION AND DETAILS.
2. ALL SURFACES SHALL BE PREPARED IN ACCORDANCE WITH PROJECT SPECIFICATIONS.
3. JUNCTION BARS SHALL BE SAME SIZE AS THE LARGER OF WALL OR SLAB REINFORCING EXCEPT WHERE OTHERWISE NOTED ON THE DETAILS OR DRAWINGS. THESE ARE ADDITIONAL BARS TO THOSE CALLED OUT FOR WALLS & SLABS.
4. ALL LAP SPLICES SHALL BE CLASS B TENSION CONTACT LAP.
5. WATERSTOP SHALL BE PLACED AT CENTER OF WALL OR SLAB, UNLESS OTHERWISE NOTED.
6. UNLESS OTHERWISE NOTED WATERSTOP SHALL BE PLACED AT ALL CONSTRUCTION JOINTS FOR BELOW GRADE OR WATER RETENTION STRUCTURES.
7. SEE PLANS & SECTIONS FOR LOCATION OF JOINTS.
8. WHERE SECTION THICKNESS DOES NOT ALLOW FOR FULL HOOK EXTENSION. ROTATE HOOK UNTIL HOOK FITS. ALTERNATIVELY, CONTRACTOR MAY USE 180° HOOK OR TWO SMALLER HOOKED BARS OF EQUIVALENT AREA OF STEEL.

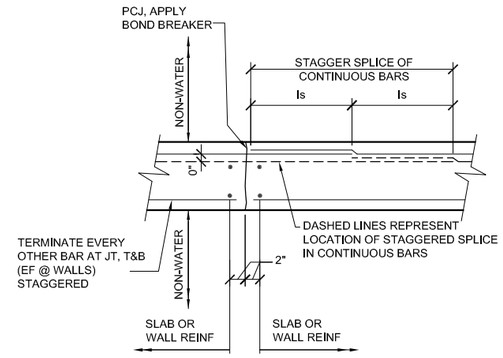

NON-WATER RETENTION SLAB OR WALL

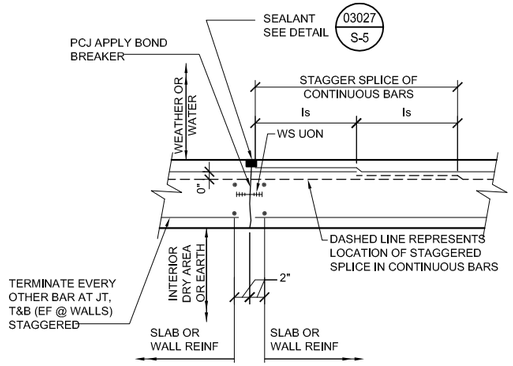

WATER RETENTION SLAB OR WALL

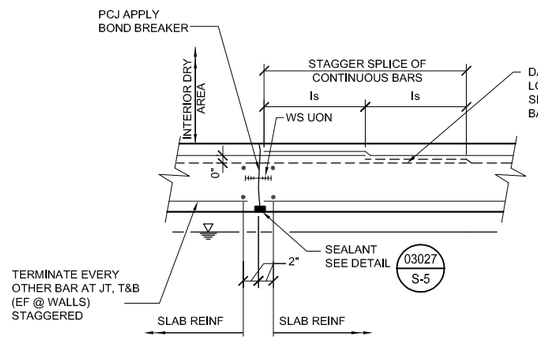

WATER RETENTION ELEVATED SLAB

PARTIAL CONTRACTION JOINT NOTES:

1. ALL SURFACES SHALL BE ROUGHENED AND PREPARED IN ACCORDANCE WITH PROJECT SPECIFICATIONS.
2. REINFORCING SHOWN IS FOR CLARITY ONLY. SEE PLANS AND SECTIONS FOR REINFORCING SIZES AND LOCATIONS.
3. ALL LAP SPLICES SHALL BE CLASS B TENSION CONTACT LAP OR 2'-0", WHICHEVER IS GREATER. ASSUME "TOP BAR" LAPS WHERE MORE THAN 12" OF CONCRETE IS CAST IN ONE LIFT BENEATH THE BAR.

CONTROL JOINT (CTJ)
DETAIL 03003
NTS VAR

REGISTERED PROFESSIONAL ENGINEER
No. S 5320
EXP. 09/30/17
STRUCTURAL
STATE OF CALIFORNIA
11/17/16

0" 1" VERIFY SCALES
BAR IS ONE INCH LONG ON FULL SIZE DRAWING. IF NOT ONE INCH LONG ON THIS DRAWING, ADJUST SCALES ACCORDINGLY

TJC and ASSOCIATES, INC.

RMC Water and Environment

REV	DATE	BY	APVD	DESCRIPTION

DESIGNED RKT
DRAWN ADM
CHECKED TJC

SUBMITTED: MARK TAKEMOTO, RMC PROJ ENGR, CE-64369
APPROVED: STEVE CLARY, RMC ENGR, CE-30318

SAUSALITO · MARIN CITY SANITARY DISTRICT

TREATMENT AND WET WEATHER FLOW UPGRADE

STANDARD DETAILS

DWG NO S-4
SHEET NO 82 OF 226
PROJ NO 055-006
DATE NOVEMBER 2016

FILENAME: GS Sheets 11-17-16 04:54pm andria || XREFS: X-SMCSD-TBLK | RKT California | X-Site | X-Topo Survey | RKT_SIG |<<--
Last Saved By: andria 11-17-16 01:31pm
W:\TJCAA - 2008 Projects\108049 - RMC, SMCSD Headworks\108049 - Str\ GS Sheets 11/17/16 12:29 andria XREFS: X-SMCSD-TBLK, RKT California, X-Site, X-Topo Survey

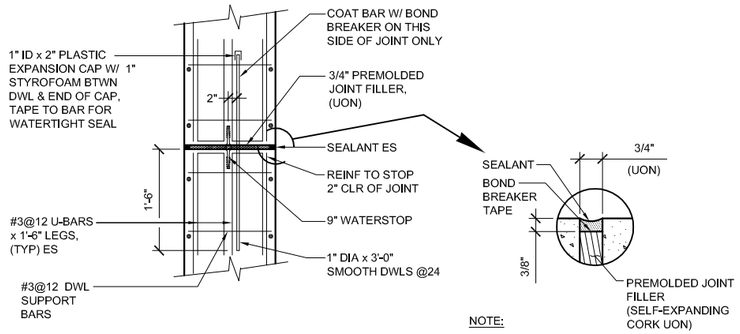

NOTE:

FOR LOCATIONS REQUIRING SEALANT AND WATERSTOPS, SEE CONCRETE JOINT NOTES AND DRAWINGS. ELSEWHERE PROVIDE EDGE CHAMFER, EXCEPT ON UNDERSIDE OF SLAB.

EXPANSION JOINT (EXP JT)

DETAIL 03004 VAR
NTS

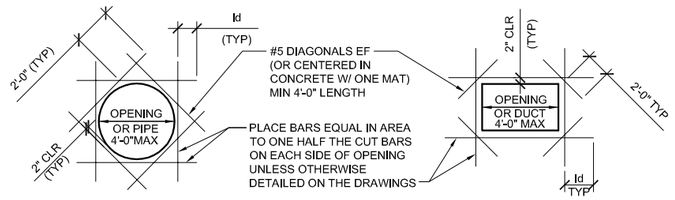

NOTES:

1. PROVIDE STANDARD HOOK IF INDICATED LENGTH IS NOT POSSIBLE.
2. REINFORCING STEEL IS TO BE CARRIED ACROSS ALL CONSTRUCTION JOINTS.
3. DETAIL IS TYPICAL FOR ALL OPENINGS GREATER THAN 10 INCHES AND LESS THAN OR EQUAL TO 4 FEET IN THE LARGER DIMENSION IN CONCRETE WALLS AND SLABS UNLESS OTHERWISE DETAILED ON THE DRAWINGS.
4. EXTRA BARS ARE NOT REQUIRED AT AN OPENING EDGE PARALLEL TO AND WITHIN 6 INCHES OF A WALL OR BEAM.

ADDITIONAL TRIM REINFORCEMENT AT OPENINGS

DETAIL 03025 VAR
NTS

$f'c$ (PSI) CONCRETE	BAR SIZE	ld (INCHES) TOP BAR	ld (INCHES) OTHER	ls (INCHES) TOP BAR	ls (INCHES) OTHER	ldh (INCHES)
2500	#3	24	19	32	25	9
	#4	32	25	42	33	12
	#5	39	30	51	39	15
	#6	47	37	62	49	18
3000	#3	22	17	29	23	9
	#4	29	23	38	30	11
	#5	36	28	47	37	14
	#6	43	34	56	45	17
4500	#3	18	14	24	19	7
	#4	24	19	32	25	9
	#5	30	24	39	32	12
	#6	35	27	46	36	14
	#7	51	40	67	52	16
	#8	59	46	77	60	18
	#9	66	51	86	67	21
	#10	74	57	97	75	23

NOTES:

1. ld: DEVELOPMENT LENGTH FOR A STRAIGHT REINFORCING BAR IN TENSION.
   ls: CLASS B TENSION LAP SPLICE LENGTH.
   ldh: DEVELOPMENT LENGTH FOR STANDARD HOOKS IN TENSION.
2. LAP SPLICES SHALL BE CLASS B TENSION CONTACT LAP SPLICES TYPICAL, UNLESS OTHERWISE NOTED ON DRAWINGS.
3. TOP BAR IS ANY HORIZONTAL BAR WITH MORE THAN 12" CONCRETE CAST IN ONE LIFT BENEATH THE BAR.
4. SPLICES IN HORIZONTAL BARS SHALL BE STAGGERED.
5. UNLESS OTHERWISE DETAILED ON THE DRAWINGS, SPLICES IN TWO CURTAINS SHALL NOT OCCUR IN THE SAME LOCATION.

LAP SPLICE LENGTH

DETAIL 03026 VAR
NTS

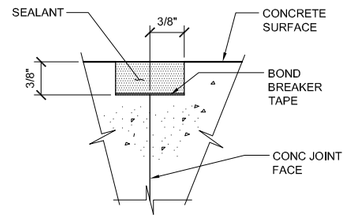

NOTE:

DO NOT COAT SEALANT GROOVE WITH BOND BREAKER.

SEALANT GROOVE

DETAIL 03027 VAR
NTS

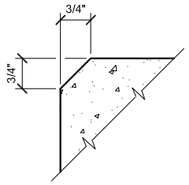

UON ON DRAWINGS

CONCRETE CHAMFER

DETAIL 03028 VAR
NTS

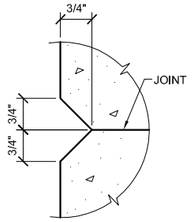

V-GROOVE JOINT

DETAIL 03029 VAR
NTS

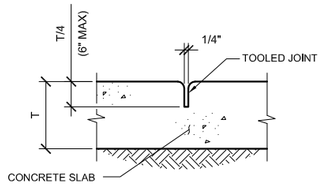

TOOLED CONTROL JOINT

DETAIL 03030 VAR
NTS

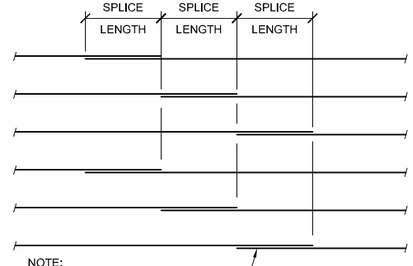

NOTE:

SPLICE LENGTH IS CLASS B TENSION CONTACT LAP SPLICE (3'-0" MIN)

PARTIAL WALL ELEVATION

CIRCULAR CONCRETE TANK WALL STAGGERED SPLICE

DETAIL 03031 VAR
NTS

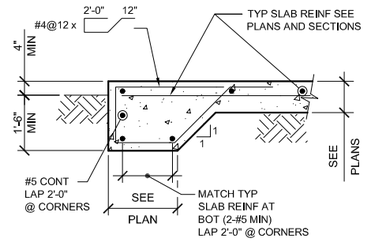

THICKENED SLAB EDGE

DETAIL 03032 VAR
NTS

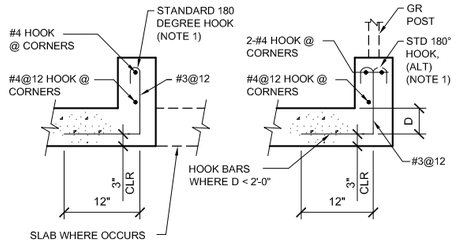

SEE PLANS FOR CURB DIMENSIONS

TYPE I TYPE II

NOTE:

1. WHERE CURB SECTION DOES NOT ALLOW FOR FULL HOOK EXTENSION, ROTATE HOOK UNTIL IT FITS.

CONCRETE CURB

DETAIL 03033 VAR
NTS

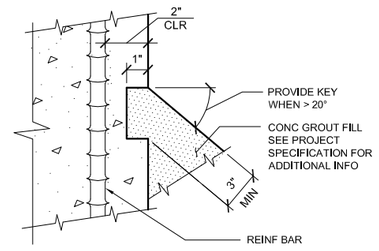

KEY AT CONCRETE FILL

DETAIL 03034 VAR
NTS

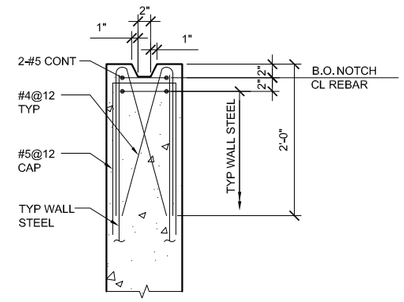

STOP LOG

DETAIL 03037 VAR
NTS

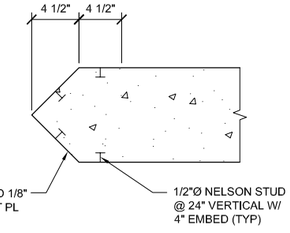

NOTE:

1. EXTEND NOSING UP TO ALLOW GRATING TO BE SUPPORTED UPON IT.

NOSEGUARD

DETAIL 03038 VAR
NTS

FILENAME: GS Sheets 11-17-16 04:55pm andria || XREFS: | X-SMCSD-TBLK | RKT California | X-Site | X-Topo Survey | RKT_SIG |<<--

W:\TJCA4 - 2008 Projects\108049 - RMC, SMCSD Headworks\108049 - Stru\ GS Sheets 11/17/16 12:29 andria XREFS: X-SMCSD-TBLK, RKT California, X-Site, X-Topo Survey

REGISTERED PROFESSIONAL ENGINEER — No. S 5320 — EXP. 09/30/17 — STRUCTURAL — STATE OF CALIFORNIA

11/17/16

0" 1" VERIFY SCALES BAR IS ONE INCH LONG ON FULL SIZE DRAWING. IF NOT ONE INCH LONG ON THIS DRAWING, ADJUST SCALES ACCORDINGLY

TJC and ASSOCIATES, INC.

RMC Water and Environment

REV	DATE	BY	APVD	DESCRIPTION

DESIGNED	RKT
DRAWN	ADM
CHECKED	TJC

SUBMITTED: MARK TAKEMOTO, RMC PROJ ENGR, CE-64369

APPROVED: STEVE CLARY, RMC ENGR, CE-30318

SAUSALITO · MARIN CITY SANITARY DISTRICT

TREATMENT AND WET WEATHER FLOW UPGRADE

STANDARD DETAILS

DWG NO	S-5
SHEET NO	83 OF 226
PROJ NO	055-006
DATE	NOVEMBER 2016

Last Saved By: andria 11-17-16 01:31pm

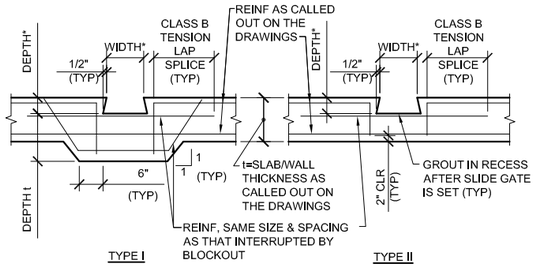

NOTES:

1. * BLOCKOUT DIMENSIONS PER MANUFACTURER.
2. USE TYPE I BLOCKOUT AT SLAB & WALLS UNLESS OTHERWISE NOTED ON DRAWINGS.

SLIDE GATE BLOCKOUT

DETAIL 03039 VAR
NTS

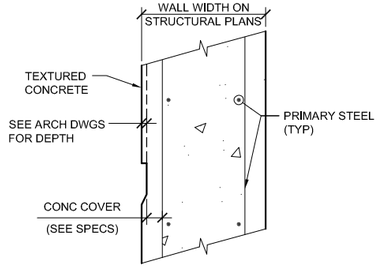

CONCRETE COVER AT TEXTURED CONCRETE WALL HEADWORKS

DETAIL 03040 VAR
NTS

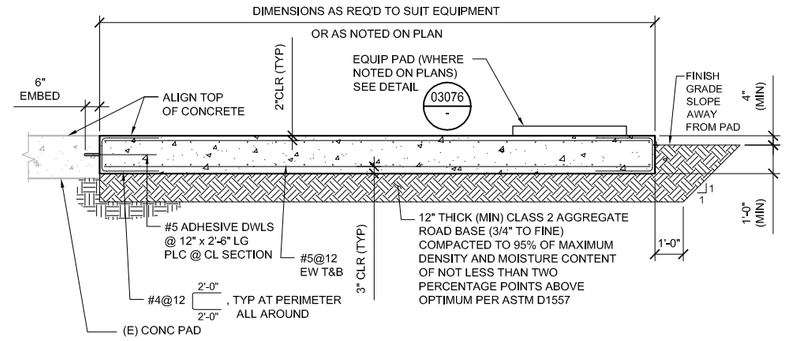

EXTERIOR EQUIPMENT SLAB

DETAIL 03074 VAR
NTS

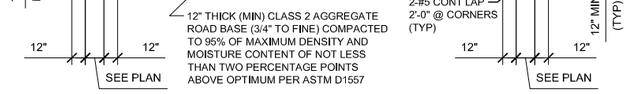

EXTERIOR EQUIPMENT SLAB

DETAIL 03075 VAR
NTS

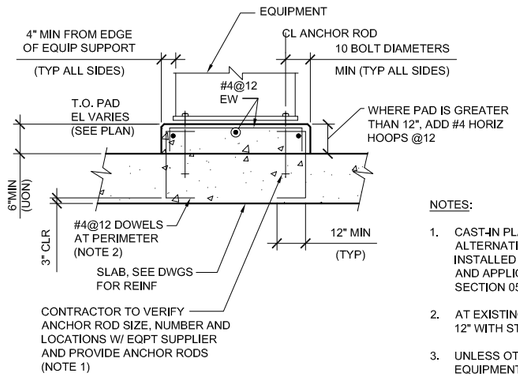

NOTES:

1. CAST-IN PLACE ANCHOR ROD SHOWN, AS AN ALTERNATIVE, CONTRACTOR MAY USE POST INSTALLED CONCRETE ANCHORS AT LOCATIONS AND APPLICATIONS WHERE PERMITTED IN SECTION 05500 OF THE CONTRACT DOCUMENTS.
2. AT EXISTING SLAB USE #4 ADHESIVE DOWELS AT 12" WITH STANDARD HOOK INTO EQUIPMENT PAD.
3. UNLESS OTHERWISE NOTED ON PLANS TOP OF EQUIPMENT PAD SHALL BE LEVEL.

EQUIPMENT PAD

DETAIL 03076 VAR
NTS

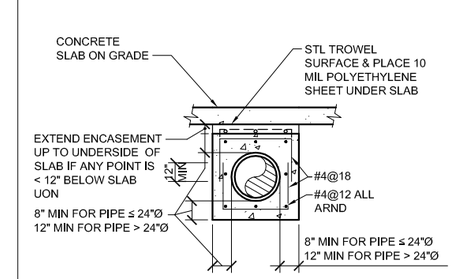

NOTE:

CONCRETE ENCASEMENT SHALL EXTEND BEYOND STRUCTURE TO FIRST PIPE JOINT, UNLESS OTHERWISE NOTED.

PIPE ENCASEMENT

DETAIL 03084 VAR
NTS

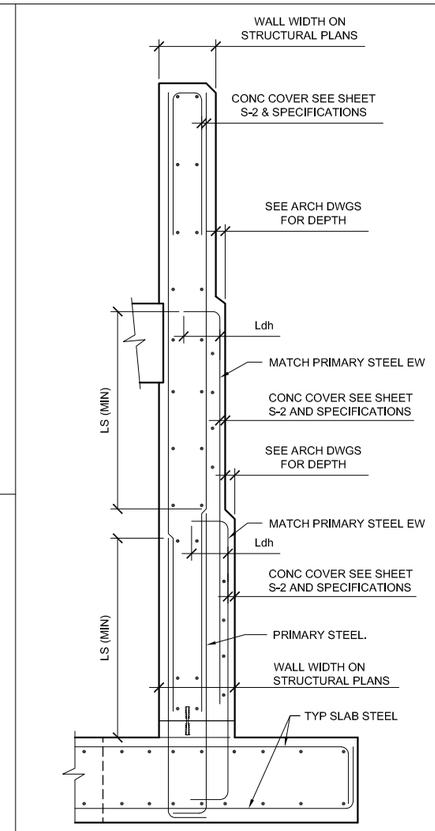

CONCRETE COVER AT ARCHITECTURAL TEXTURED CLARIFIER WALL

DETAIL 03041 VAR
NTS

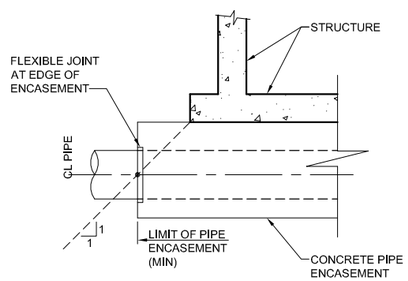

ENCASEMENT LIMITS

DETAIL 03086 VAR
NTS

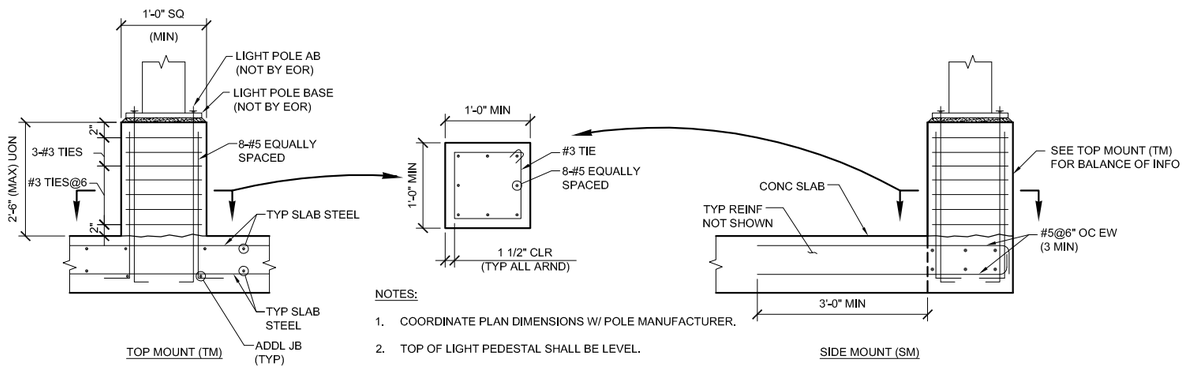

NOTES:

1. COORDINATE PLAN DIMENSIONS W/ POLE MANUFACTURER.
2. TOP OF LIGHT PEDESTAL SHALL BE LEVEL.

LIGHT PEDESTAL

DETAIL 03087 VAR
NTS

SUSAN CAROL KEMPF PROFESSIONAL ENGINEER No. S 5320 EXP. 09/30/17 STRUCTURAL STATE OF CALIFORNIA
11/17/16

0" 1" VERIFY SCALES BAR IS ONE INCH LONG ON FULL SIZE DRAWING. IF NOT ONE INCH LONG ON THIS DRAWING, ADJUST SCALES ACCORDINGLY

TJC and ASSOCIATES, INC.

RMC Water and Environment

REV	DATE	BY	APVD	DESCRIPTION

DESIGNED	RKT
DRAWN	ADM
CHECKED	TJC

SUBMITTED: MARK TAKEMOTO, RMC PROJ ENGR, CE-64369
APPROVED: STEVE CLARY, RMC ENGR, CE-30318

SAUSALITO · MARIN CITY SANITARY DISTRICT

TREATMENT AND WET WEATHER FLOW UPGRADE

STANDARD DETAILS

DWG NO	S-6
SHEET NO	84 OF 226
PROJ NO	055-006
DATE	NOVEMBER 2016

FILENAME: GS Sheets 11-17-16 04:56pm andria || XREFS:| X-SMCSD-TBLK | RKT California | X-Site | X-Topo Survey | RKT_SIG |<<--

W:\TJCAA - 2008 Projects\108049 - RMC, SMCSD Headworks\108049 - Stru\ GS Sheets 11/17/16 12:29 andria XREFS: X-SMCSD-TBLK, RKT California, X-Site, X-Topo Survey

Last Saved By: andria 11-17-16 01:31pm

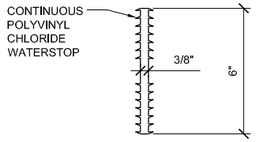

SEE JT NOTES & DWGS FOR REQD LOCATIONS

6" PVC JOINT WATERSTOP

DETAIL 03102 VAR
NTS

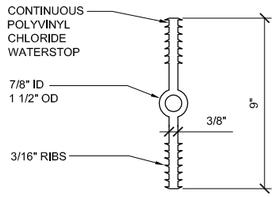

SEE JT NOTES & DWGS FOR REQD LOCATIONS

9" PVC EXPANSION JOINT WATERSTOP

DETAIL 03103 VAR
NTS

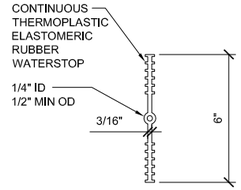

6" TPER JOINT WATERSTOP

DETAIL 03104 VAR
NTS

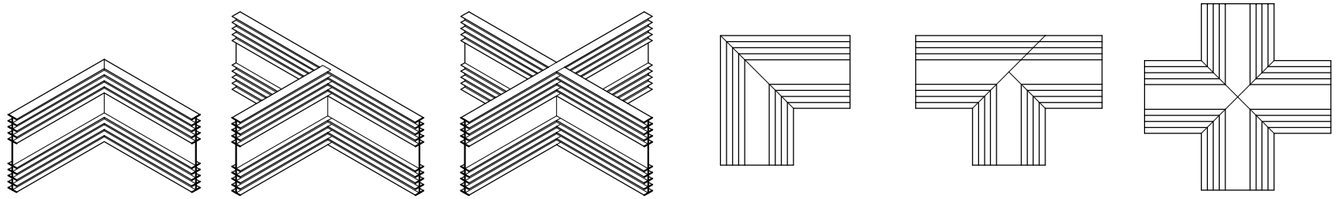

VERTICAL ELL | VERTICAL TEE | VERTICAL CROSS | FLAT ELL | FLAT TEE | FLAT CROSS

NOTES:

1. PVC WATERSTOPS SHOWN, SIMILAR FOR THERMOPLASTIC ELASTOMERIC RUBBER WATERSTOPS.
2. ALL FITTINGS SHALL BE FACTORY MADE OR SHOP WELDED IN ACCORDANCE WITH MANUFACTURERS RECOMMENDATIONS.
3. ONLY STRAIGHT BUTT SPLICES MAY BE MADE IN FIELD.

WATERSTOP FITTINGS

DETAIL 03106 VAR
NTS

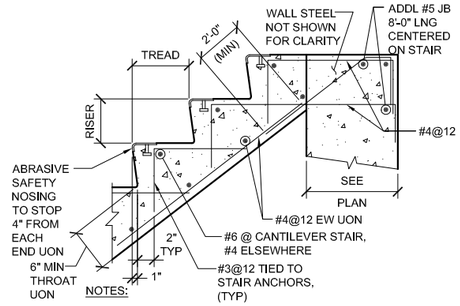

NOTES:

1. NOSING SHALL NOT BE USED WHERE CONTAINMENT COATING IS APPLIED.
2. RAILING NOT SHOWN, SEE DRAWINGS.

CONCRETE STAIR

DETAIL 03125 VAR
NTS

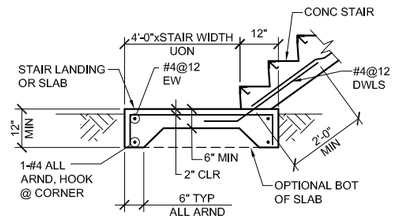

CONCRETE STAIR

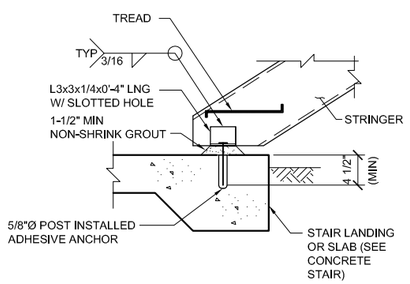

METAL STAIR

STAIR TO CONCRETE SLAB CONNECTION

DETAIL 03127 VAR
NTS

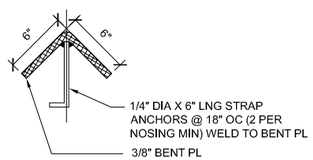

NOTES:

1. ALL ALUMINUM CONSTRUCTION (UON)
2. ALUMINUM IN CONTACT WITH OR EMBEDDED IN CONCRETE SHALL RECEIVE A BITUMINOUS OR SIMILAR COATING.

STAIR NOSING

DETAIL 03129 VAR
NTS

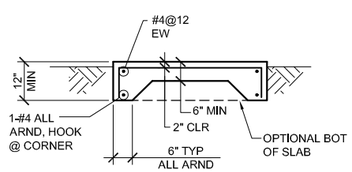

CONCRETE LANDING

DETAIL 03131 VAR
NTS

STATE OF CALIFORNIA — STRUCTURAL — MARK R. TAKEMOTO — No. S220 — EXP. 09/30/17 — PROFESSIONAL ENGINEER
11/17/16

0" 1" VERIFY SCALES BAR IS ONE INCH LONG ON FULL SIZE DRAWING. IF NOT ONE INCH LONG ON THIS DRAWING, ADJUST SCALES ACCORDINGLY

TJC an ARCADIS company

RMC Water and Environment

REV	DATE	BY	APVD	DESCRIPTION

DESIGNED	RKT
DRAWN	ADM
CHECKED	TJC

SUBMITTED: MARK TAKEMOTO, RMC PROJ ENGR, CE-64369

APPROVED: STEVE CLARY, RMC ENGR, CE-30318

SAUSALITO · MARIN CITY SANITARY DISTRICT

TREATMENT AND WET WEATHER FLOW UPGRADE

STANDARD DETAILS

DWG NO	S-7
SHEET NO	85 OF 226
PROJ NO	055-006
DATE	NOVEMBER 2016

FILENAME: GS Sheets 11-17-16 04:56pm andria ||| XREFS: X-SMCSD-TBLK | RKT California | X-Site | X-Topo Survey | RKT_SIG |<<--

W:\TJCAA - 2008 Projects\108049 - RMC, SMCSD Headworks\108049 - Stru\ GS Sheets 11/17/16 12:29 andria XREFS: X-SMCSD-TBLK, RKT California, X-Site, X-Topo Survey

Last Saved By: andria 11-17-16 01:31pm

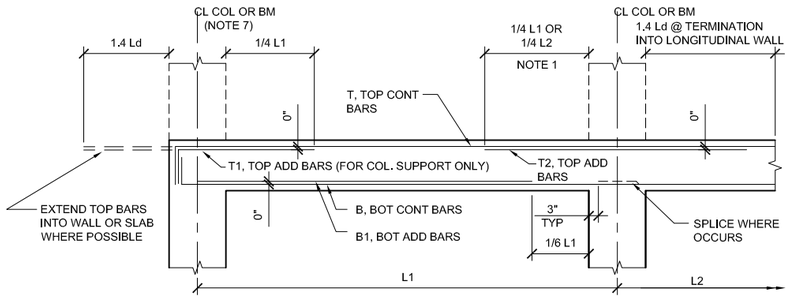

TYPE E-END SPAN

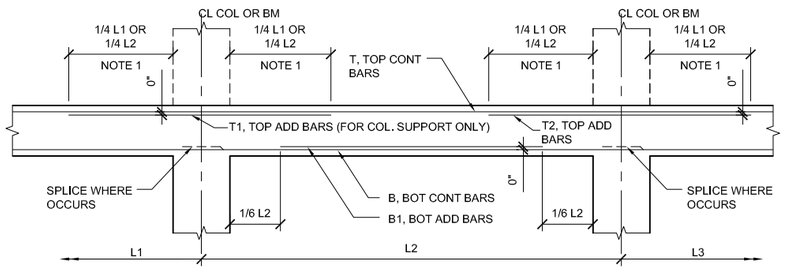

TYPE I-INTERIOR SPAN

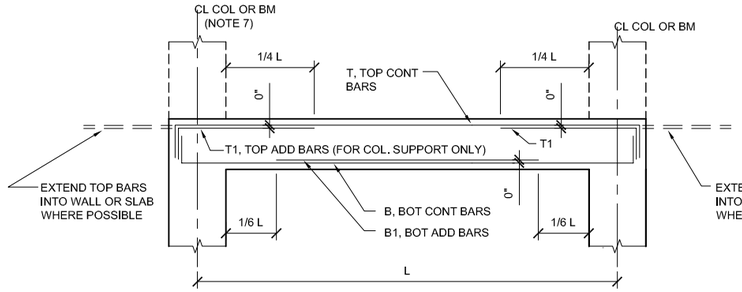

TYPE S-SINGLE SPAN

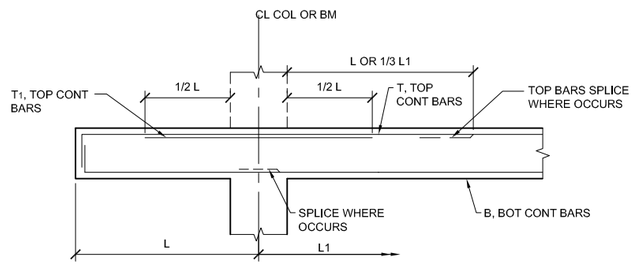

TYPE C - CANTILEVER SPAN
NON-DUCTILE BEAM LONGITUDINAL
REINFORCEMENT DETAIL

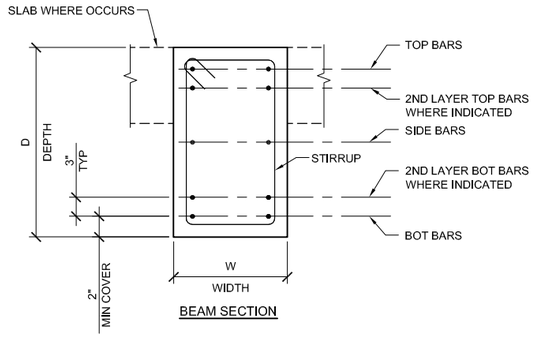

BEAM SECTION

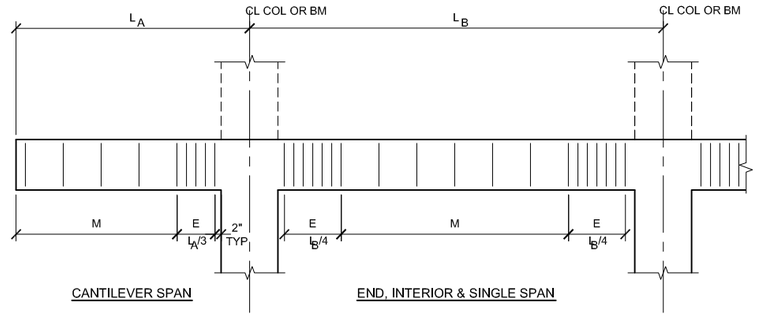

CANTILEVER SPAN END, INTERIOR & SINGLE SPAN

STIRRUP SPACING LAYOUT

Beam Schedule												
Mark	Size WxD (NOTE 8)	Type	Longitudinal Reinforcement Bottom B	Bottom B1	Bottom T	Top T1	Top T2	Side Bars EF	Stirrups Size & Type	Stirrups Spacing E	Stirrups Spacing M	Remarks
30-1	18x18	VARIES	3-#6	-	3-#6	-	-	#5@12	#4-A2	4	8	
100-1	18xVARIES	S	-	-	-	-	-	#5@12	#3-B2	12	8	FOOTNOTE 1
100-2	18x36	S	4-#10	-	4-#10	-	-	4-#9	#4-A4	4	8	
100-3	12x18	S	3-#6	-	3-#6	-	-	#5@12	#4-A2	4	8	
100-4	12x18	S	3-#6	-	3-#6	-	-	#5@12	#4-A2	4	8	
100-5	12x18	S	3-#6	-	3-#6	-	-	#5@12	#4-A2	4	8	
100-6	12x18	S	3-#6	-	3-#6	-	-	#5@12	#4-A2	4	8	
100-7	12x18	I	3-#6	-	3-#6	-	-	#5@12	#4-A2	4	8	
100-8	12x18	I	3-#6	-	3-#6	-	-	#5@12	#4-A2	4	8	
100-9	18x36	S	4-#7	-	4-#7	-	-	#5@12	#4-A2	4	8	
100-10	18xVARIES	S	4-#7	-	4-#7	-	-	#5@12	#4-B2	8	12	
100-11	12x18	C	2-#6	-	2-#6	-	-	-	#4-A2	6	6	
100-12	18x36	C	3-#6	-	3-#6	-	-	6-#7	#4-A2	4	4	
100-13	18x78	S	3-#6	-	3-#6	-	-	#5@12	#4-A2	4	8	

FOOTNOTE:

1. 4-#9 SIDE BARS AT SOUTHERN END ONLY, EXTEND 1/4(L) INTO BEAM. LAP WITH #5@12 SIDE BARS REMAINDER OF BEAM.

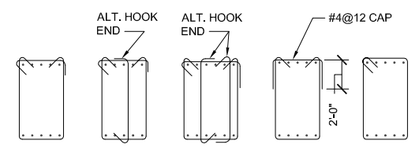

STIRRUP TYPES

NOTES:

1. WHICHEVER IS GREATER, BUT NOT LESS THAN DEVELOPMENT LENGTH.
2. TOP CONTINUOUS BARS SPLICE AT MIDSPAN.
3. BOTTOM CONTINUOUS BARS SPLICE AT SUPPORT.
4. SIDE BARS TO BE CONTINUOUS, STAGGER SPLICE AT MIDSPAN.
5. END SPAN AND CANTILEVER SPAN MAY BE OPPOSITE HAND.
6. SEE TYPICAL DETAIL SHEET FOR REQUIRED LAP SPLICES.
7. AT CONTRACTOR'S OPTION MAY SUBSTITUTE REBAR TERMINATORS IN-LIEU OF STANDARD HOOKS.
8. BEAM DEPTHS SHOWN ARE MINIMUMS.

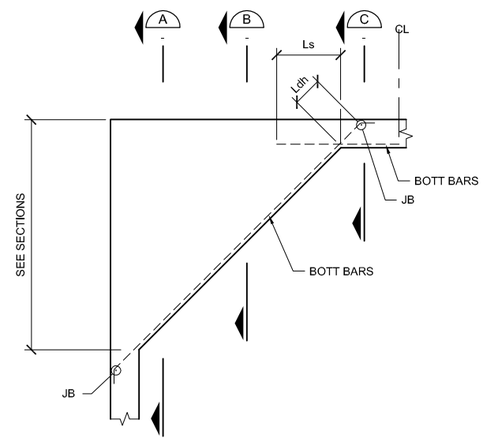

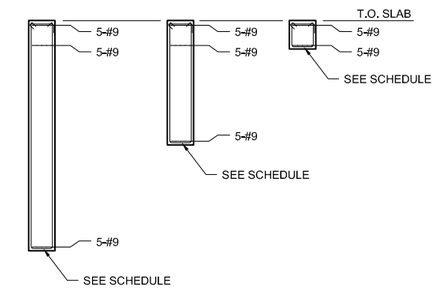

SECTION A SECTION B SECTION C

BM 100-1

SCHEDULE AND BEAM DETAILS

DETAIL 03301
NTS VAR

REGISTERED PROFESSIONAL ENGINEER
RICHARD M. KEMPF
No. C 52020
EXP. 09/30/17
STRUCTURAL
STATE OF CALIFORNIA
11/17/16

0" 1" VERIFY SCALES
BAR IS ONE INCH
LONG ON FULL
SIZE DRAWING.
IF NOT ONE INCH
LONG ON THIS
DRAWING, ADJUST
SCALES ACCORDINGLY

TJC and ASSOCIATES, INC.

RMC Water and Environment

REV	DATE	BY	APVD	DESCRIPTION

DESIGNED	RKT
DRAWN	ADM
CHECKED	TJC

SUBMITTED: MARK TAKEMOTO
RMC PROJ ENGR CE-64369

APPROVED: STEVE CLARY
RMC ENGR CE-30318

SAUSALITO · MARIN CITY SANITARY DISTRICT

TREATMENT AND WET WEATHER FLOW UPGRADE

STANDARD DETAILS

DWG NO	S-8
SHEET NO	86 OF 226
PROJ NO	055-006
DATE	NOVEMBER 2016

FILENAME: GS Sheets 11-17-16 04:57pm andria || XREFS:| X-SMCSD-TBLK | RKT California | X-Site | X-Topo Survey | RKT_SIG |<--
Last Saved By: andria 11-17-16 01:31pm
W:\TJCAA - 2008 Projects\108049 - RMC, SMCSD Headworks\108049 - Stru\ GS Sheets 11/17/16 12:29 andria XREFS: X-SMCSD-TBLK, RKT California, X-Site, X-Topo Survey

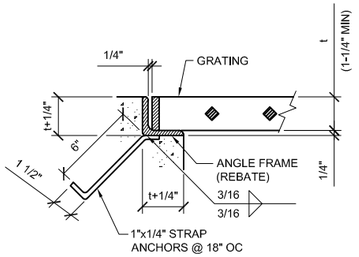

NOTES:

1. t = GRATING THICKNESS SEE GRATING NOTES
2. SIMILAR FOR PLANK GRATING

GRATING SEAT

DETAIL 05051 VAR NTS

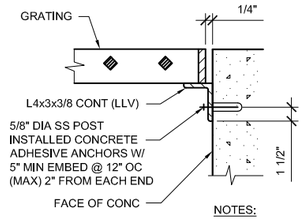

NOTES:

1. SIMILAR FOR PLANK GRATING

GRATING WALL SUPPORT

DETAIL 05052 VAR NTS

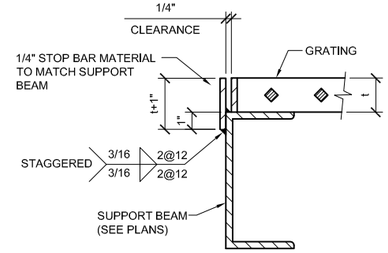

NOTES:

1. SIMILAR FOR PLANK GRATING

GRATING STOP PLATE

DETAIL 05053 VAR NTS

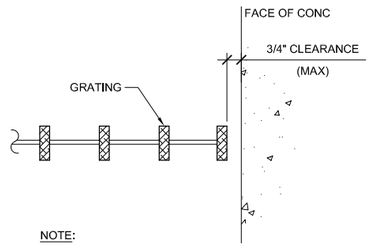

NOTE:

1. REFER TO PLANS AND PROJECT SPECIFICATIONS FOR GRATING THICKNESS (t) AND MATERIAL.
2. SIMILAR TO PLANK GRATING (NON-SUPPORT)

GRATING END CONDITION

DETAIL 05054 VAR NTS

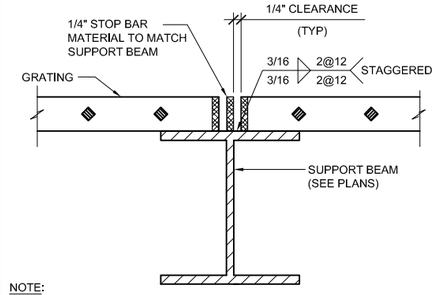

NOTE:

1. REFER TO PLANS AND PROJECT SPECIFICATIONS FOR GRATING THICKNESS (t) AND MATERIAL.
2. SIMILAR TO PLANK GRATING

INTERMEDIATE GRATING SUPPORT

DETAIL 05055 VAR NTS

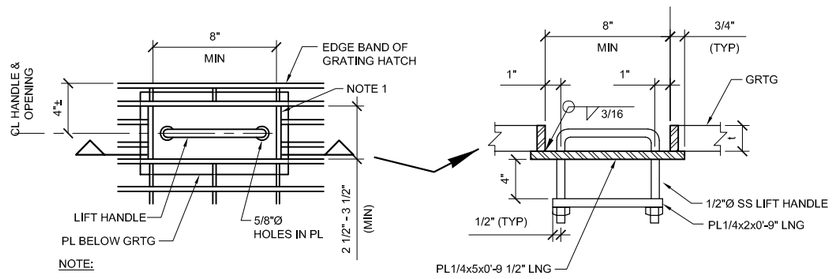

NOTE:

1. BAND EDGES OF GRATING OPENING WITH TYP BANDING.

PLAN

SECTION

NOTE:

1. REFER TO PLANS AND PROJECT SPECIFICATIONS FOR GRATING THICKNESS (t) AND MATERIAL.

LIFT HANDLE AT GRATING

DETAIL 05056 VAR NTS

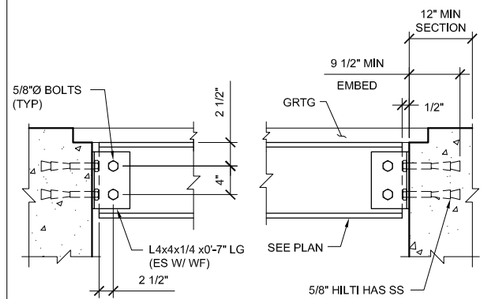

NOTES:

1. SIMILAR FOR PLANK GRATING

GRATING END SUPPORT

DETAIL 05058 VAR NTS

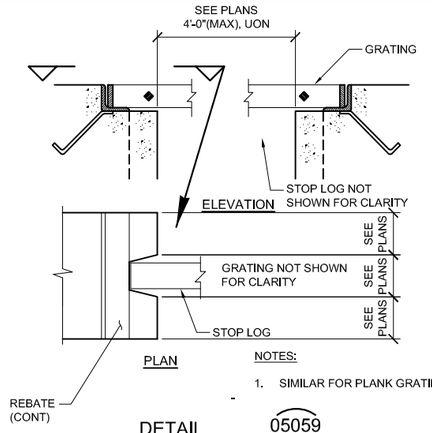

PLAN

NOTES:

1. SIMILAR FOR PLANK GRATING

DETAIL 05059 VAR NTS

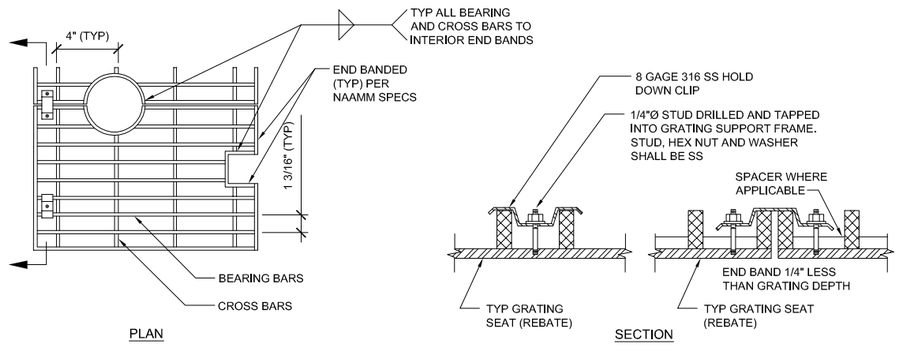

PLAN

SECTION

GRATING

DETAIL 05061 VAR NTS

NOTES:

1. GRATING SHALL CONFORM TO THE METAL BAR GRATING MANUAL OF NAAMM. UNLESS OTHERWISE SPECIFIED, GRATING SHALL BE OF ALUMINUM.
2. GRATING SHALL BE SWAGED AND FORGED.
3. GRATING SHALL BE REMOVABLE.
4. PROVIDE 4 GRATING CLIPS APPROXIMATE 4" FROM THE CORNERS OF EACH PIECE. ADJACENT PIECES MAY BE ANCHORED WITH ONE CLIP AND TWO STUDS.
5. CLEAR SPAN SHALL BE PLAN DIMENSION, FACE TO FACE OF OPENING.
6. PROVIDE 1/8" THICK NEOPRENE ISOLATION BETWEEN ALUM GRATING AND GALVANIZED STEEL SUPPORTS.
7. END BAND TO BE A 1/4" LESS THAN GRATING DEPTH.
8. GRATING SHALL BE DESIGNED AS SPECIFIED IN SPECIFICATIONS UNLESS OTHERWISE SHOWN.

STATE OF CALIFORNIA — REGISTERED PROFESSIONAL ENGINEER — No. S 5320 — EXP. 09/30/17 — STRUCTURAL — 11/17/16

0" 1" VERIFY SCALES BAR IS ONE INCH LONG ON FULL SIZE DRAWING. IF NOT ONE INCH LONG ON THIS DRAWING, ADJUST SCALES ACCORDINGLY

TJC and ASSOCIATES, INC.

RMC Water and Environment

REV	DATE	BY	APVD	DESCRIPTION

DESIGNED	RKT
DRAWN	ADM
CHECKED	TJC

SUBMITTED: MARK TAKEMOTO, RMC PROJ ENGR, CE-64369

APPROVED: STEVE CLARY, RMC ENGR, CE-30318

SAUSALITO · MARIN CITY SANITARY DISTRICT

TREATMENT AND WET WEATHER FLOW UPGRADE

STANDARD DETAILS

DWG NO	S-9
SHEET NO	87 OF 226
PROJ NO	055-006
DATE	NOVEMBER 2016

FILENAME: GS Sheets 11-17-16 04:58pm andria || XREFS: X-SMCSD-TBLK | RKT California | X-Site | X-Topo Survey | RKT_SIG |<<--

W:\TJCAA - 2008 Projects\108049 - RMC, SMCSD Headworks\108049 - Stru\ GS Sheets 11/17/16 12:29 andria XREFS: X-SMCSD-TBLK, RKT California, X-Site, X-Topo Survey

Last Saved By: andria 11-17-16 01:31pm

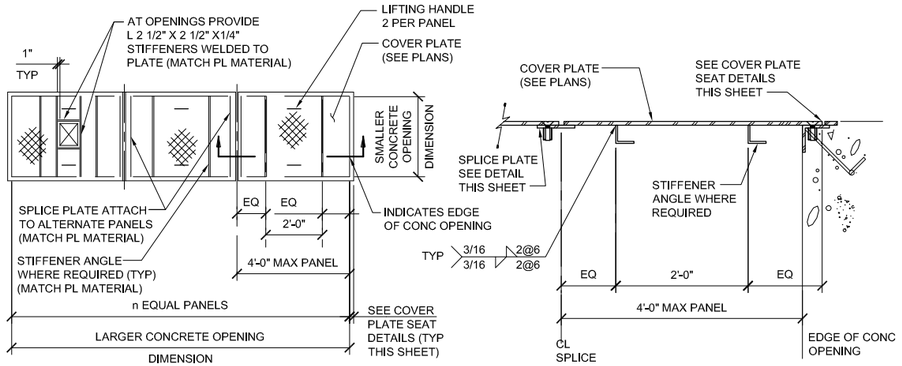

TYPICAL PLAN

TYPICAL SECTION

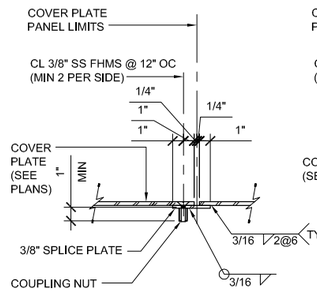

SPLICE PLATE

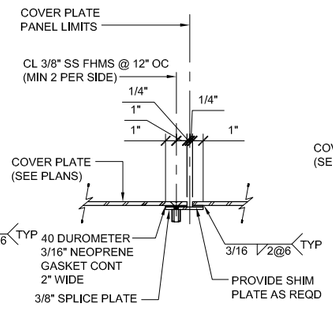

GASKETED SPLICE PLATE

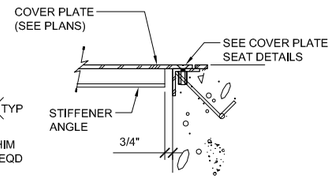

STIFFENER ANGLE END

NOTE:

1. REFER TO PLANS AND PROJECT SPECIFICATIONS, FOR PLATE THICKNESS AND MATERIAL.

MULTIPLE COVER PLATE

DETAIL 05075 VAR
NTS

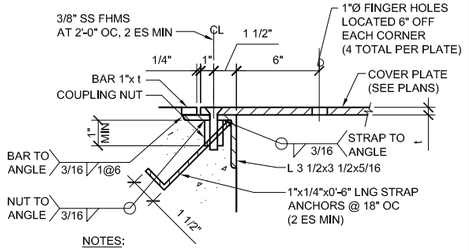

NOTES:

1. REFER TO PLANS AND PROJECT SPECIFICATIONS, FOR PLATE THICKNESS AND MATERIAL.
2. PROVIDE FINGER HOLES FOR COVER PLATES < 4 SQ FT IN SIZE UON.
3. t = 3/8" UON ON DRAWINGS

COVER PLATE SEAT

DETAIL 05076 VAR
NTS

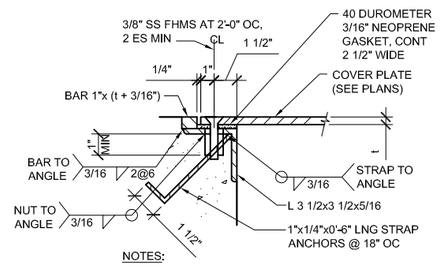

NOTES:

1. REFER TO PLANS AND PROJECT SPECIFICATIONS, FOR PLATE THICKNESS AND MATERIAL.
2. t = 3/8" UON ON DRAWINGS

GASKETED COVER PLATE SEAT

DETAIL 05077 VAR
NTS

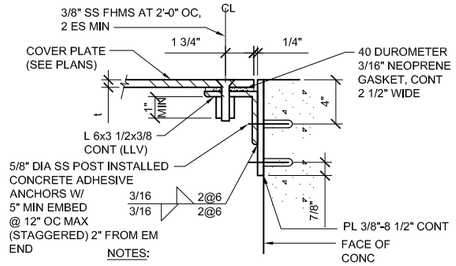

NOTES:

1. REFER TO PLANS AND PROJECT SPECIFICATIONS, FOR PLATE THICKNESS AND MATERIAL.
2. t = 3/8" UON ON DRAWINGS
3. SEE DETAIL 5077, FOR BALANCE OF INFORMATION.

GASKETED COVER PLATE WITH BACKUP PLATE

DETAIL 05078 VAR
NTS

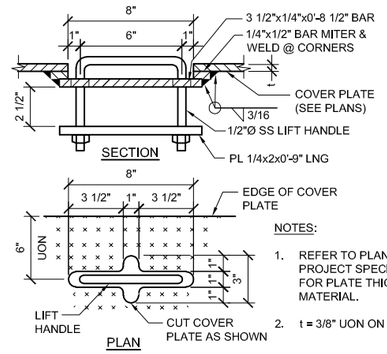

NOTES:

1. REFER TO PLANS AND PROJECT SPECIFICATIONS, FOR PLATE THICKNESS AND MATERIAL.
2. t = 3/8" UON ON DRAWINGS

LIFT HANDLE AT COVER PLATE

DETAIL 05079 VAR
NTS

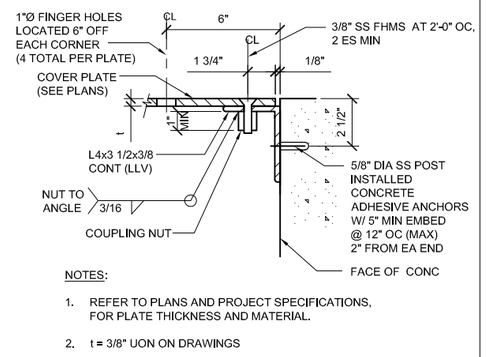

NOTES:

1. REFER TO PLANS AND PROJECT SPECIFICATIONS, FOR PLATE THICKNESS AND MATERIAL.
2. t = 3/8" UON ON DRAWINGS
3. SEE DETAIL 5077, FOR BALANCE OF INFORMATION.

COVER PLATE

DETAIL 05080 VAR
NTS

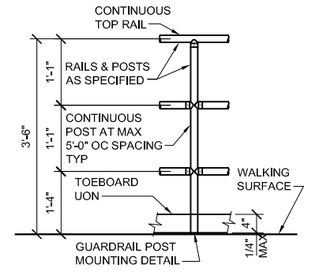

TOEBOARD SHALL BE PROVIDED UNLESS SPECIFICALLY NOTED OTHERWISE ON PLANS OR IN SPECS. TOEBOARD NOT REQUIRED WHEN CONCRETE CURBS 4" OR HIGHER ARE PROVIDED.

TYPICAL GUARDRAIL

DETAIL 05101 VAR
NTS

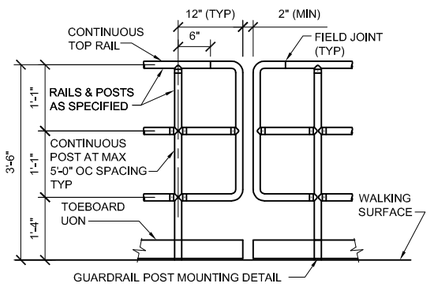

TOEBOARD SHALL BE PROVIDED UNLESS SPECIFICALLY NOTED OTHERWISE ON PLANS OR IN SPECS. TOEBOARD NOT REQUIRED WHEN CONCRETE CURBS 4" OR HIGHER ARE PROVIDED.

TYPICAL GUARDRAIL END POST

DETAIL 05102 VAR
NTS

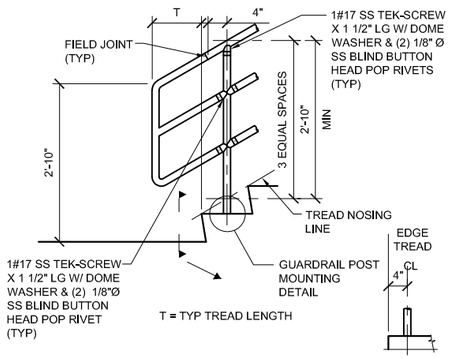

TYPICAL GUARDRAIL END POST AT STAIR

DETAIL 05103 VAR
NTS

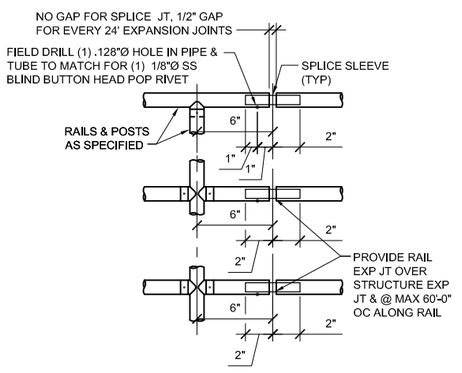

TYPICAL GUARDRAIL JOINT

DETAIL 05105 VAR
NTS

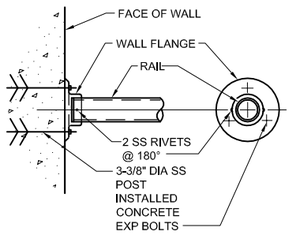

GUARDRAIL OR HANDLE WALL FUTURE

DETAIL 05106 VAR
NTS

STRUCTURAL ENGINEER — No. S 5320 — EXP. 09/30/17 — STATE OF CALIFORNIA

11/17/16

0" 1" VERIFY SCALES BAR IS ONE INCH LONG ON FULL SIZE DRAWING. IF NOT ONE INCH LONG ON THIS DRAWING, ADJUST SCALES ACCORDINGLY

TJC and ASSOCIATES, INC.

RMC Water and Environment

REV	DATE	BY	APVD	DESCRIPTION

DESIGNED	RKT
DRAWN	ADM
CHECKED	TJC

SUBMITTED: MARK TAKEMOTO, RMC PROJ ENGR, CE-64369

APPROVED: STEVE CLARY, RMC ENGR, CE-30318

SAUSALITO · MARIN CITY SANITARY DISTRICT

TREATMENT AND WET WEATHER FLOW UPGRADE

STANDARD DETAILS

DWG NO	S-10
SHEET NO	88 OF 226
PROJ NO	055-006
DATE	NOVEMBER 2016

FILENAME: GS Sheets 11-17-16 04:58pm andria || XREFS: X-SMCSD-TBLK | RKT California | X-Site | X-Topo Survey | RKT_SIG |<<--

W:\1CAA - 2008 Projects\108049 - RMC, SMCSD Headworks\108049 - Stru\ GS Sheets 11/17/16 12:29 andria XREFS: X-SMCSD-TBLK, RKT California, X-Site, X-Topo Survey

Last Saved By: andria 11-17-16 01:31pm

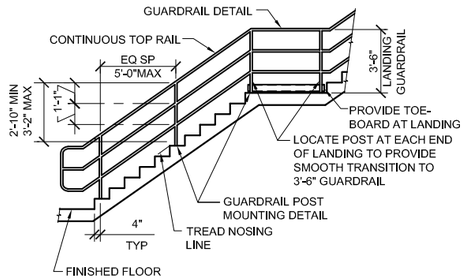

NOTE: ALL DIMENSIONS ARE TO CL OF POST OR RAIL

STAIR GUARDRAIL

DETAIL 05108 / NTS VAR

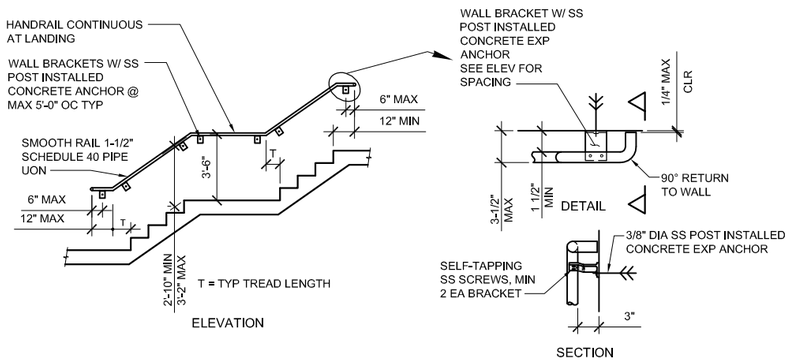

STAIR HANDRAIL

DETAIL 05110 / NTS VAR

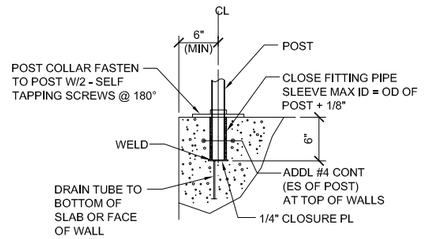

REMOVABLE GUARDRAIL BASE

DETAIL 05111 / NTS VAR

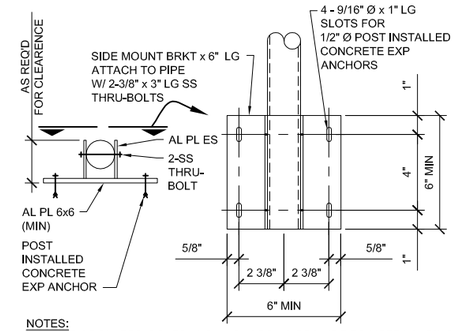

NOTES:
1. SIZE OF PLATES, BOLTS AND ANCHORS AS REQUIRE TO MEET LOADING REQUIREMENTS.
2. ALUMINUM IN CONTACT WITH CONCRETE SHALL BE COATED WITH A BITUMINOUS OR SIMILAR COATING

STEEL SIDE MOUNT 4 - HOLES

DETAIL 05112 / NTS VAR

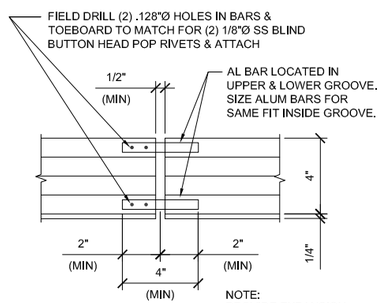

NOTE:
PROVIDE EXPANSION
JOINT AT STRUCTURE
JOINT & 24' OC MAX

TOEBOARD EXPANSION JOINT

DETAIL 05113 / NTS VAR

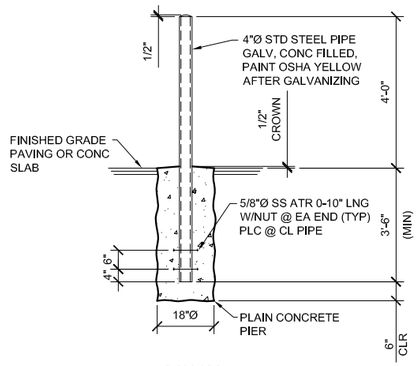

BOLLARD

DETAIL 05129 / NTS VAR

11/17/16

0" — 1" VERIFY SCALES
BAR IS ONE INCH
LONG ON FULL
SIZE DRAWING.
IF NOT ONE INCH
LONG ON THIS
DRAWING, ADJUST
SCALES ACCORDINGLY

TJC

RMC Water and Environment

REV	DATE	BY	APVD	DESCRIPTION
1				
2				
3				
4				
5				

DESIGNED	RKT
DRAWN	ADM
CHECKED	TJC

SUBMITTED: MARK TAKEMOTO
RMC PROJ ENGR CE-64369

APPROVED: STEVE CLARY
RMC ENGR CE-30318

SAUSALITO · MARIN CITY SANITARY DISTRICT

TREATMENT AND WET WEATHER FLOW UPGRADE

STANDARD DETAILS

DWG NO	S-11
SHEET NO	89 OF 226
PROJ NO	055-006
DATE	NOVEMBER 2016

FILENAME: GS Sheets 11-17-16 04:59pm andria || XREFS:| X-SMCSD-TBLK | RKT California | X-Site | X-Topo Survey | RKT_SIG |<--

W:\TJCAA - 2008 Projects\108049 - RMC, SMCSD Headworks\108049 - Stru\ GS Sheets 11/17/16 12:29 andria XREFS: X-SMCSD-TBLK, RKT California, X-Site, X-Topo Survey

Last Saved By: andria 11-17-16 01:31pm

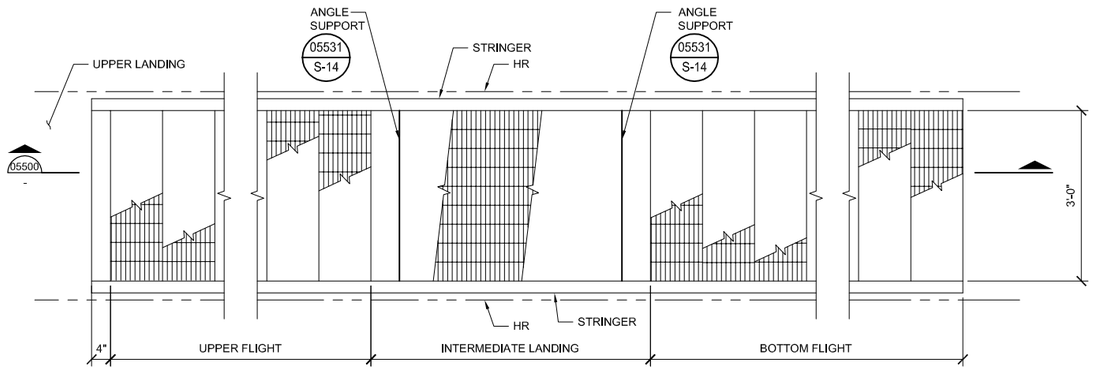

PLAN

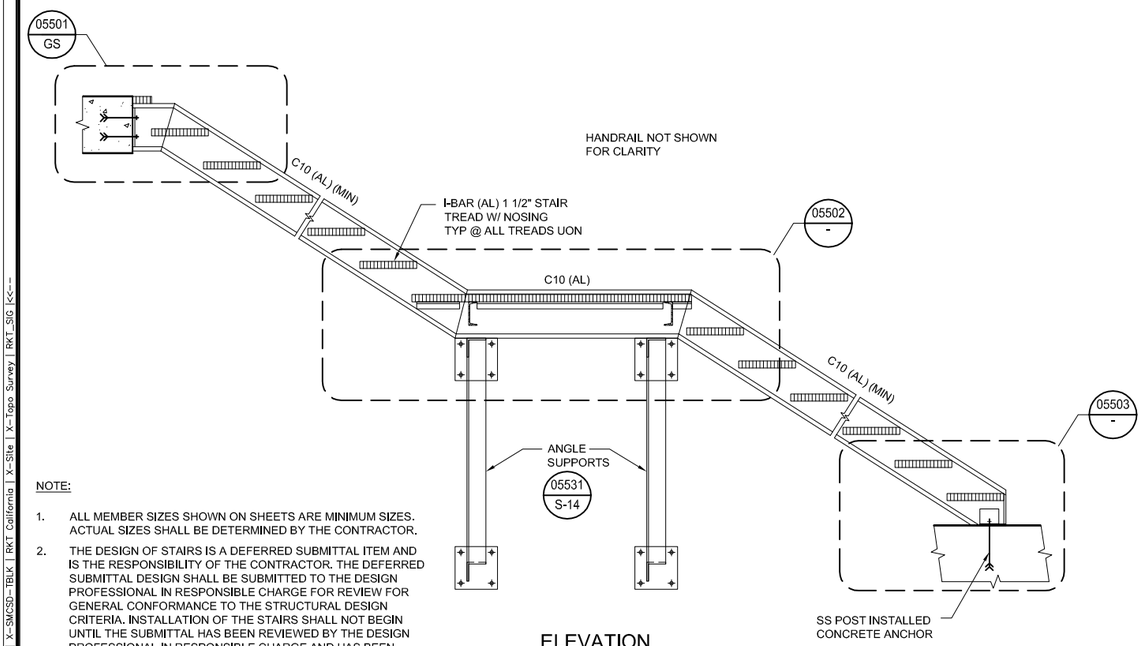

ELEVATION

TYPICAL STAIR

DETAIL 05500 VAR

NTS

NOTE:

1. ALL MEMBER SIZES SHOWN ON SHEETS ARE MINIMUM SIZES. ACTUAL SIZES SHALL BE DETERMINED BY THE CONTRACTOR.
2. THE DESIGN OF STAIRS IS A DEFERRED SUBMITTAL ITEM AND IS THE RESPONSIBILITY OF THE CONTRACTOR. THE DEFERRED SUBMITTAL DESIGN SHALL BE SUBMITTED TO THE DESIGN PROFESSIONAL IN RESPONSIBLE CHARGE FOR REVIEW FOR GENERAL CONFORMANCE TO THE STRUCTURAL DESIGN CRITERIA. INSTALLATION OF THE STAIRS SHALL NOT BEGIN UNTIL THE SUBMITTAL HAS BEEN REVIEWED BY THE DESIGN PROFESSIONAL IN RESPONSIBLE CHARGE AND HAS BEEN FOUND TO BE IN GENERAL CONFORMANCE WITH THE DESIGN OF THE PROJECT AND THE SUBMITTAL HAS BEEN DEEMED ACCEPTABLE BY THE OWNER.
3. ALL MATERIALS FOR STAIRS SHALL BE ALUMINUM UON.
4. WIDTH OF STAIR SHOWN ON DRAWINGS IS THE DISTANCE BETWEEN STRINGERS.

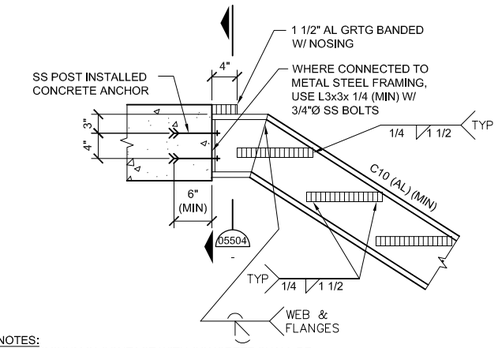

NOTES:

1. ALUMINUM IN CONTACT WITH CONCRETE SHALL BE COATED WITH A BITUMINOUS OR SIMILAR COATING

UPPER CONNECTION AT CONCRETE

DETAIL 05501 VAR

NTS

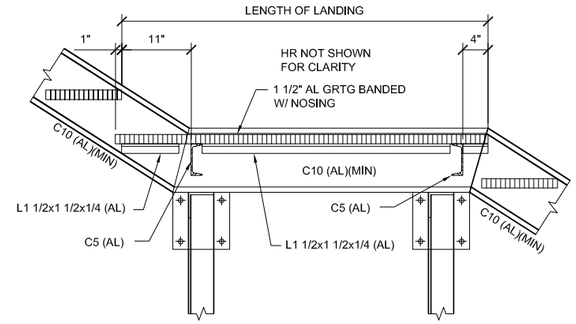

INTERMEDIATE LANDING

DETAIL 05502 VAR

NTS

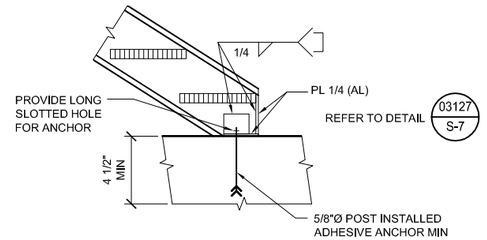

NOTES:

1. ALUMINUM IN CONTACT WITH CONCRETE SHALL BE COATED WITH A BITUMINOUS OR SIMILAR COATING

BOTTOM ANCHOR AT CONCRETE

DETAIL 05503 VAR

NTS

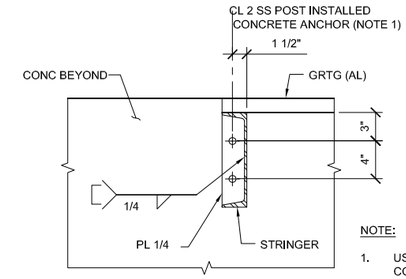

NOTE:

1. USE 3/4" SS MB AT CONNECTION TO METAL FRAMING.

NOTES:

1. ALUMINUM IN CONTACT WITH CONCRETE SHALL BE COATED WITH A BITUMINOUS OR SIMILAR COATING

DETAIL 05504 VAR

NTS

FILENAME: GS Sheets 11-17-16 05:00pm andria || XREFS: X-SMCSD-TBLK | RKT California | X-Site | X-Topo Survey | RKT_SIG |<--

XREFS: X-SMCSD-TBLK, RKT California, X-Site, X-Topo Survey

W:\TJCAA - 2008 Projects\108049 - RMC, SMCSD Headworks\108049 - Stru\ GS Sheets 11/17/16 12:29 andria

KEVIN KEMP No. S 5220 EXP. 09/30/17 STRUCTURAL STATE OF CALIFORNIA
11/17/16

0" 1" VERIFY SCALES BAR IS ONE INCH LONG ON FULL SIZE DRAWING. IF NOT ONE INCH LONG ON THIS DRAWING, ADJUST SCALES ACCORDINGLY

TJC and ASSOCIATES, INC.

RMC Water and Environment

REV	DATE	BY	APVD	DESCRIPTION

DESIGNED	RKT
DRAWN	ADM
CHECKED	TJC

SUBMITTED: MARK TAKEMOTO, RMC PROJ ENGR, CE-64369

APPROVED: STEVE CLARY, RMC ENGR, CE-30318

SAUSALITO · MARIN CITY SANITARY DISTRICT

TREATMENT AND WET WEATHER FLOW UPGRADE

STANDARD DETAILS

DWG NO	S-12
SHEET NO	90 OF 226
PROJ NO	055-006
DATE	NOVEMBER 2016

Last Saved By: andria 11-17-16 01:31pm

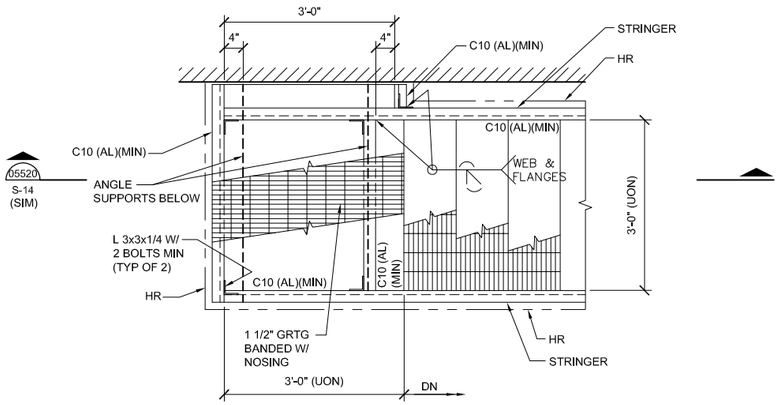

TOP LANDING AT STAIRS

DETAIL 05510 VAR

NTS

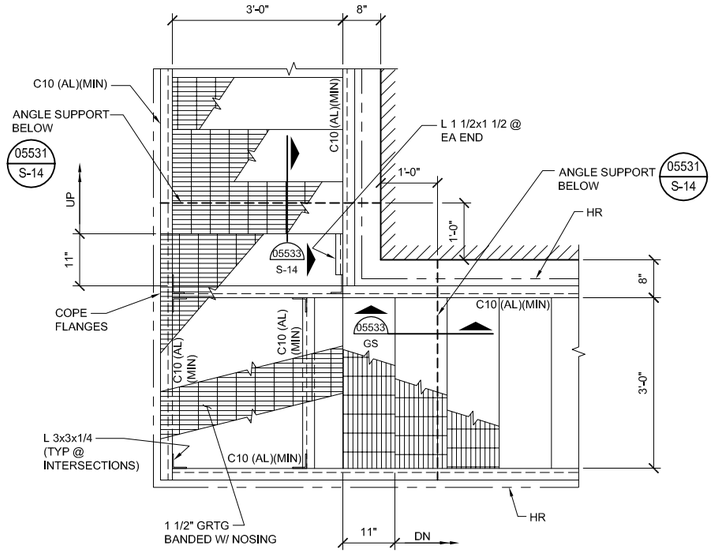

NOTE:

1. EXTERIOR CORNER SHOWN. INTERIOR CORNER SIMILAR.

PLAN AT CORNER

DETAIL 05513 VAR

NTS

FILENAME: GS Sheets 11-17-16 05:00pm andria || XREFS:| X-SMCSD-TBLK | RKT California | X-Site | X-Topo Survey | RKT_SIG |<<--

REGISTERED PROFESSIONAL ENGINEER
No. S 5320
EXP. 09/30/17
STRUCTURAL
STATE OF CALIFORNIA

11/17/16

0" 1"
VERIFY SCALES
BAR IS ONE INCH LONG ON FULL SIZE DRAWING. IF NOT ONE INCH LONG ON THIS DRAWING, ADJUST SCALES ACCORDINGLY

TJC

RMC
Water and Environment

REV	DATE	BY	APVD	DESCRIPTION
△				
△				
△				
△				
△				

DESIGNED	RKT
DRAWN	ADM
CHECKED	TJC

SUBMITTED: MARK TAKEMOTO
RMC PROJ ENGR CE-64369

APPROVED: STEVE CLARY
RMC ENGR CE-30318

SAUSALITO · MARIN CITY SANITARY DISTRICT

TREATMENT AND WET WEATHER FLOW UPGRADE

STANDARD DETAILS

DWG NO	S-13
SHEET NO	91 OF 226
PROJ NO	055-006
DATE	NOVEMBER 2016

Last Saved By: andria 11-17-16 01:31pm

W:\TJCAA - 2008 Projects\108049 - RMC, SMCSD Headworks\108049 - Stru\ GS Sheets 11/17/16 12:29 andria XREFS: X-SMCSD-TBLK, RKT California, X-Site, X-Topo Survey

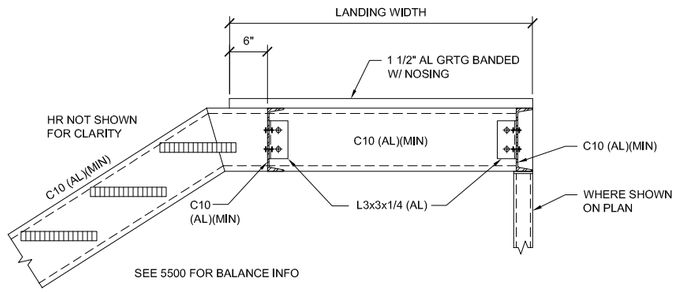

TRANSITION FROM LANDING TO "DOWN" FLIGHT

DETAIL NTS 05520 VAR

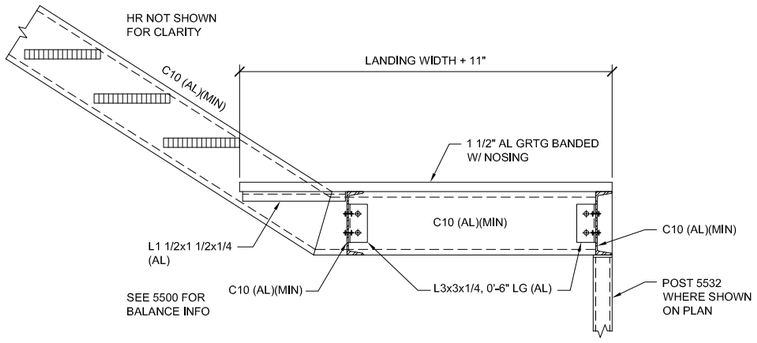

TRANSITION FROM LANDING TO "UP" FLIGHT

DETAIL NTS 05521 VAR

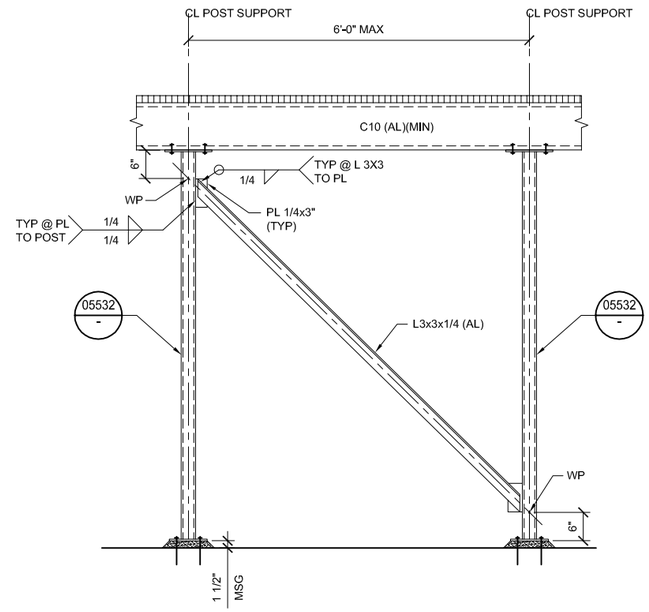

POST SUPPORT AT INTERMEDIATE LANDING

DETAIL NTS 05530 VAR

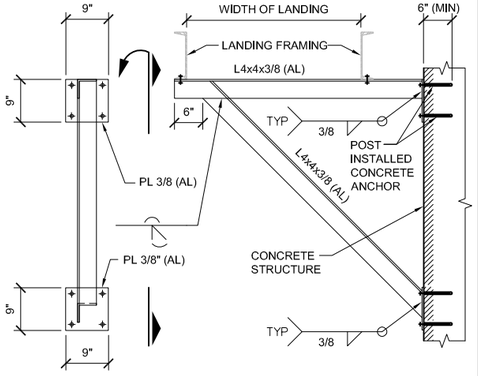

NOTES:
1. ALUMINUM IN CONTACT WITH CONCRETE SHALL BE COATED WITH A BITUMINOUS OR SIMILAR COATING

ANGLE SUPPORT

DETAIL NTS 05531 VAR

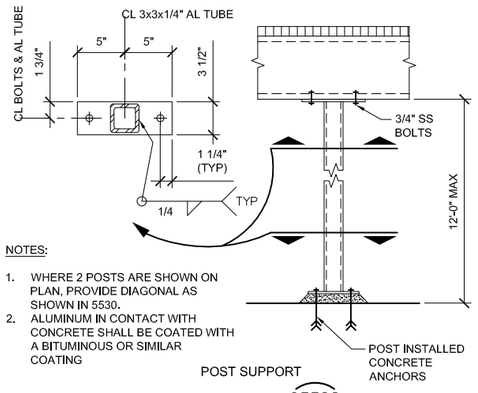

NOTES:
1. WHERE 2 POSTS ARE SHOWN ON PLAN, PROVIDE DIAGONAL AS SHOWN IN 5530.
2. ALUMINUM IN CONTACT WITH CONCRETE SHALL BE COATED WITH A BITUMINOUS OR SIMILAR COATING

POST SUPPORT

DETAIL NTS 05532 VAR

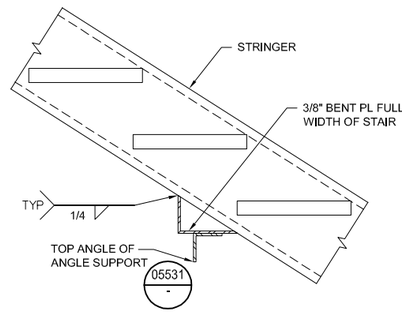

SUPPORT AT SLOPED STRINGER

DETAIL NTS 05533 VAR

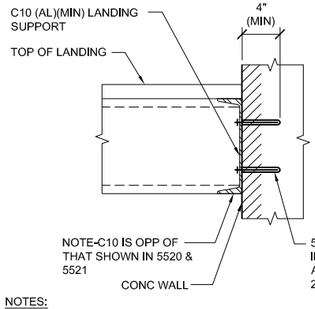

NOTES:
1. ALUMINUM IN CONTACT WITH CONCRETE SHALL BE COATED WITH A BITUMINOUS OR SIMILAR COATING

INTERMEDIATE LANDING SUPPORT AT CONCRETE WALL

DETAIL NTS 05534 VAR

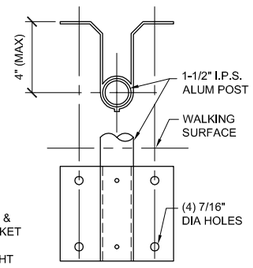

NOTES:
1. ALUMINUM IN CONTACT WITH CONCRETE SHALL BE COATED WITH A BITUMINOUS OR SIMILAR COATING

SIDE MOUNT BRACKET

DETAIL NTS 05535 VAR

FILENAME: GS Sheets 11-17-16 05:01pm andria || XREFS: | X-SMCSD-TBLK | RKT California | X-Site | X-Topo Survey | RKT_SIG |<<--
W:\TJCA4 - 2008 Projects\108049 - RMC, SMCSD Headworks\108049 - Stru\ GS Sheets 11/17/16 12:29 andria XREFS: X-SMCSD-TBLK, RKT California, X-Site,
Last Saved By: andria 11-17-16 01:31pm

REGISTERED PROFESSIONAL ENGINEER MARK TAKEMOTO No. S 5320 EXP. 09/30/17 STRUCTURAL STATE OF CALIFORNIA
11/17/16

0" 1" VERIFY SCALES BAR IS ONE INCH LONG ON FULL SIZE DRAWING. IF NOT ONE INCH LONG ON THIS DRAWING, ADJUST SCALES ACCORDINGLY

TJC and ASSOCIATES, INC.

RMC Water and Environment

REV	DATE	BY	APVD	DESCRIPTION

DESIGNED	RKT
DRAWN	ADM
CHECKED	TJC

SUBMITTED: MARK TAKEMOTO, RMC PROJ ENGR, CE-64369

APPROVED: STEVE CLARY, RMC ENGR, CE-30318

SAUSALITO · MARIN CITY SANITARY DISTRICT

TREATMENT AND WET WEATHER FLOW UPGRADE

STANDARD DETAILS

DWG NO	S-14
SHEET NO	92 OF 226
PROJ NO	055-006
DATE	NOVEMBER 2016

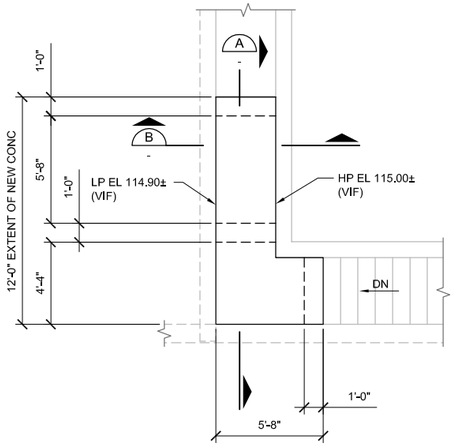

STAIR PLAN (1 / -)

SCALE: 1/4"=1'-0"

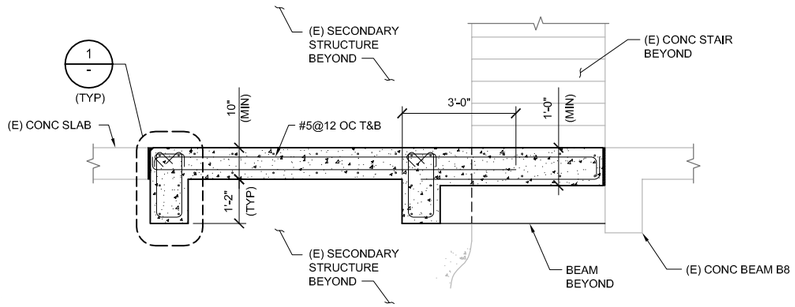

SECTION A (-)

SCALE: 1/2"=1'-0"

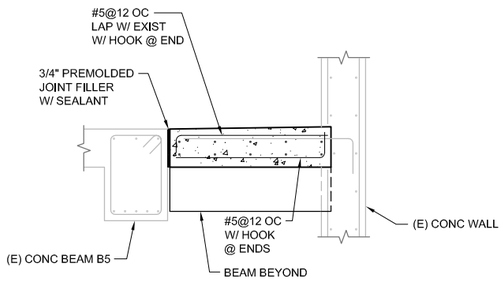

SECTION B (-)

SCALE: 1/2"=1'-0"

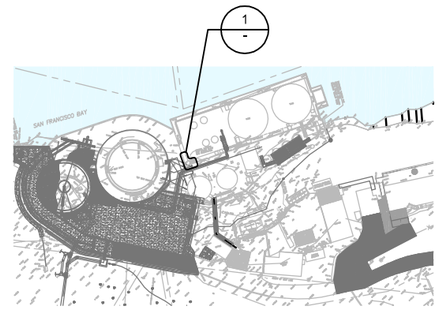

KEY PLAN

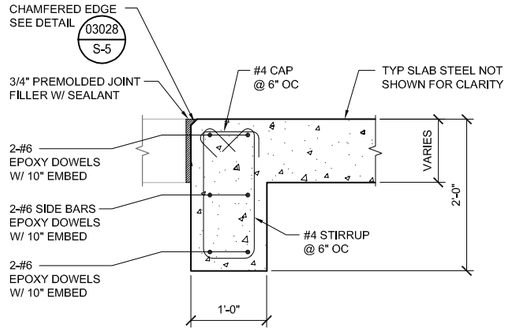

DETAIL (1 / -)

SCALE: 1"=1'-0"

STATE OF CALIFORNIA — STRUCTURAL — No. S 5220 — EXP. 09/30/17 — PROFESSIONAL ENGINEER — REGISTERED CIVIL ENGINEER

11/17/16

0" 1" — VERIFY SCALES — BAR IS ONE INCH LONG ON FULL SIZE DRAWING. IF NOT ONE INCH LONG ON THIS DRAWING, ADJUST SCALES ACCORDINGLY

TJC and ASSOCIATES, INC.

RMC Water and Environment

REV	DATE	BY	APVD	DESCRIPTION
1				
2				
3				
4				
5				

DESIGNED	RKT
DRAWN	ADM
CHECKED	TJC

SUBMITTED: MARK TAKEMOTO — RMC PROJ ENGR — CE-64369

APPROVED: STEVE CLARY — RMC ENGR — CE-30318

SAUSALITO · MARIN CITY SANITARY DISTRICT

TREATMENT AND WET WEATHER FLOW UPGRADE

STANDARD DETAILS

DWG NO	S-15
SHEET NO	93 OF 226
PROJ NO	055-006
DATE	NOVEMBER 2016

FILENAME: GS Sheets 11-17-16 05:02pm andria || XREFS:| X-SMCSD-TBLK | RKT California | X-Site | X-Topo Survey | RKT_SIG |<<--

Last Saved By: andria 11-17-16 01:31pm

W:\TJCAA - 2008 Projects\108049 - RMC, SMCSD Headworks\108049 - Stn\ GS Sheets 11/17/16 12:29 andria XREFS: X-SMCSD-TBLK, RKT California, X-Site, X-Topo Survey

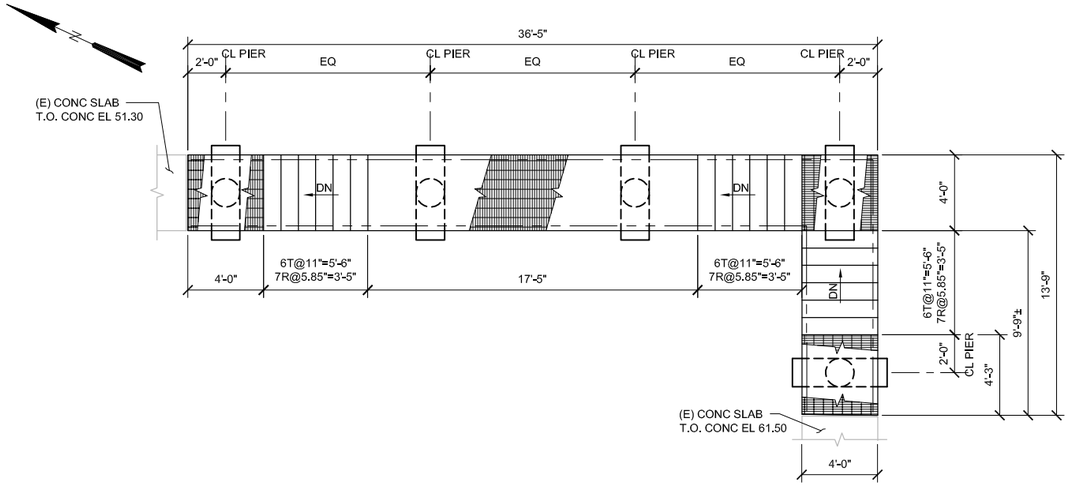

STAIR PLAN

SCALE: 1/4"=1'-0"

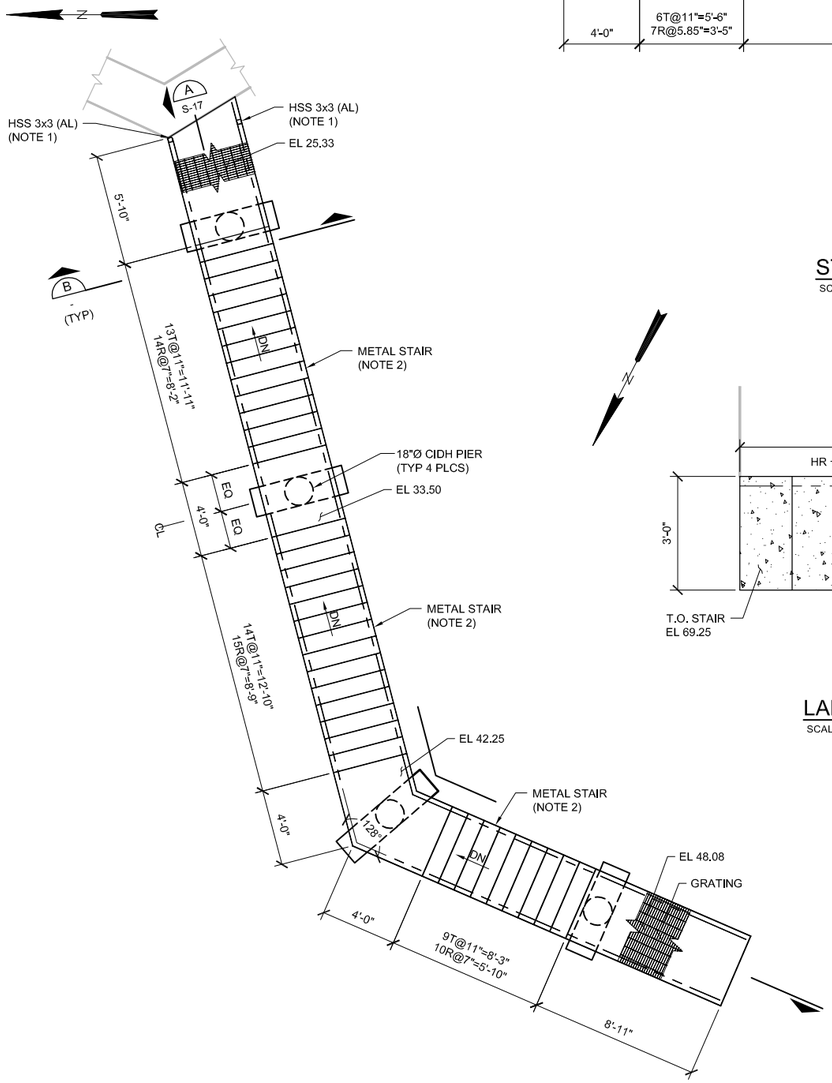

STAIR PLAN

SCALE: 1/4"=1'-0"

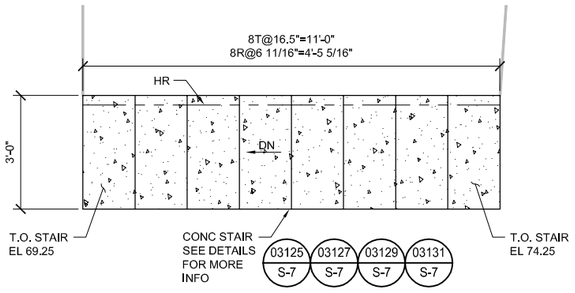

LANDSCAPE STAIR PLAN

SCALE: 3/4"=1'-0"

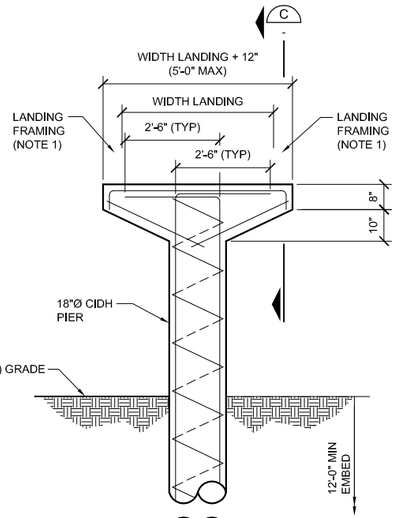

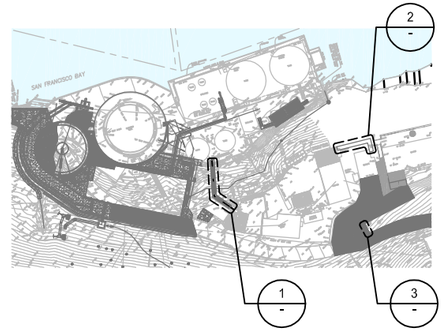

STAIR KEY PLAN



SECTION B

SCALE: 1/2"=1'-0"

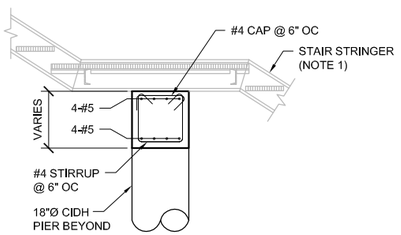

SECTION C

SCALE: 1/2"=1'-0"

NOTE:

1. MEMBER SIZES SHOWN ON SHEETS ARE MINIMUM SIZES. ACTUAL SIZES SHALL BE DETERMINED BY THE CONTRACTOR.
2. THE DESIGN OF STAIRS IS A DEFERRED SUBMITTAL ITEM AND IS THE RESPONSIBILITY OF THE CONTRACTOR. THE DEFERRED SUBMITTAL DESIGN SHALL BE SUBMITTED TO THE DESIGN PROFESSIONAL IN RESPONSIBLE CHARGE FOR REVIEW FOR GENERAL CONFORMANCE TO THE STRUCTURAL DESIGN CRITERIA. INSTALLATION OF THE STAIRS SHALL NOT BEGIN UNTIL THE SUBMITTAL HAS BEEN REVIEWED BY THE DESIGN PROFESSIONAL IN RESPONSIBLE CHARGE AND HAS BEEN FOUND TO BE IN GENERAL CONFORMANCE WITH THE DESIGN OF THE PROJECT AND THE SUBMITTAL HAS BEEN DEEMED ACCEPTABLE BY THE OWNER.
3. ALL MATERIALS FOR STAIRS SHALL BE ALUMINUM UON.
4. WIDTH OF STAIR SHOWN ON DRAWINGS IS THE DISTANCE BETWEEN STRINGERS.

REGISTERED PROFESSIONAL ENGINEER — RICHARD K. KEMPF — No. S 5320 — EXP. 09/30/17 — STRUCTURAL — STATE OF CALIFORNIA

11/17/16

0" 1" VERIFY SCALES BAR IS ONE INCH LONG ON FULL SIZE DRAWING. IF NOT ONE INCH LONG ON THIS DRAWING, ADJUST SCALES ACCORDINGLY

TJC

RMC Water and Environment

REV	DATE	BY	APVD	DESCRIPTION

DESIGNED	RKT
DRAWN	ADM
CHECKED	TJC

SUBMITTED: MARK TAKEMOTO, RMC PROJ ENGR, CE-64369

APPROVED: STEVE CLARY, RMC ENGR, CE-30318

SAUSALITO · MARIN CITY SANITARY DISTRICT

TREATMENT AND WET WEATHER FLOW UPGRADE

MISCELLANEOUS STAIRS

DWG NO	S-16
SHEET NO	94 OF 226
PROJ NO	055-006
DATE	NOVEMBER 2016

FILENAME: 0055-006-S16 11-17-16 05:03pm andria || XREFS: X-SMCSD-TBLK | S-HEADWORKS-PLAN | X-SitePlan | X-Treatment Plant site plan | X-Topo Survey new | X-Site | RKT California | X-Topo Survey | S-HEADWORKS-SECT | RKT_SIG |<<--

Last Saved By: andria 11-17-16 01:45pm

W:\TJCAA - 2008 Projects\108049 - RMC, SMCSD Headworks\108049 - Stru\ 0055-006-S16 11/17/16 13:26 andria XREFS: X-SMCSD-TBLK, S-HEADWORKS-PLAN, X-SitePlan, X-Treatment Plant site plan, X-Topo Survey new, X-Site, RKT California, X-Topo Survey, S-HEADWORKS-SECT

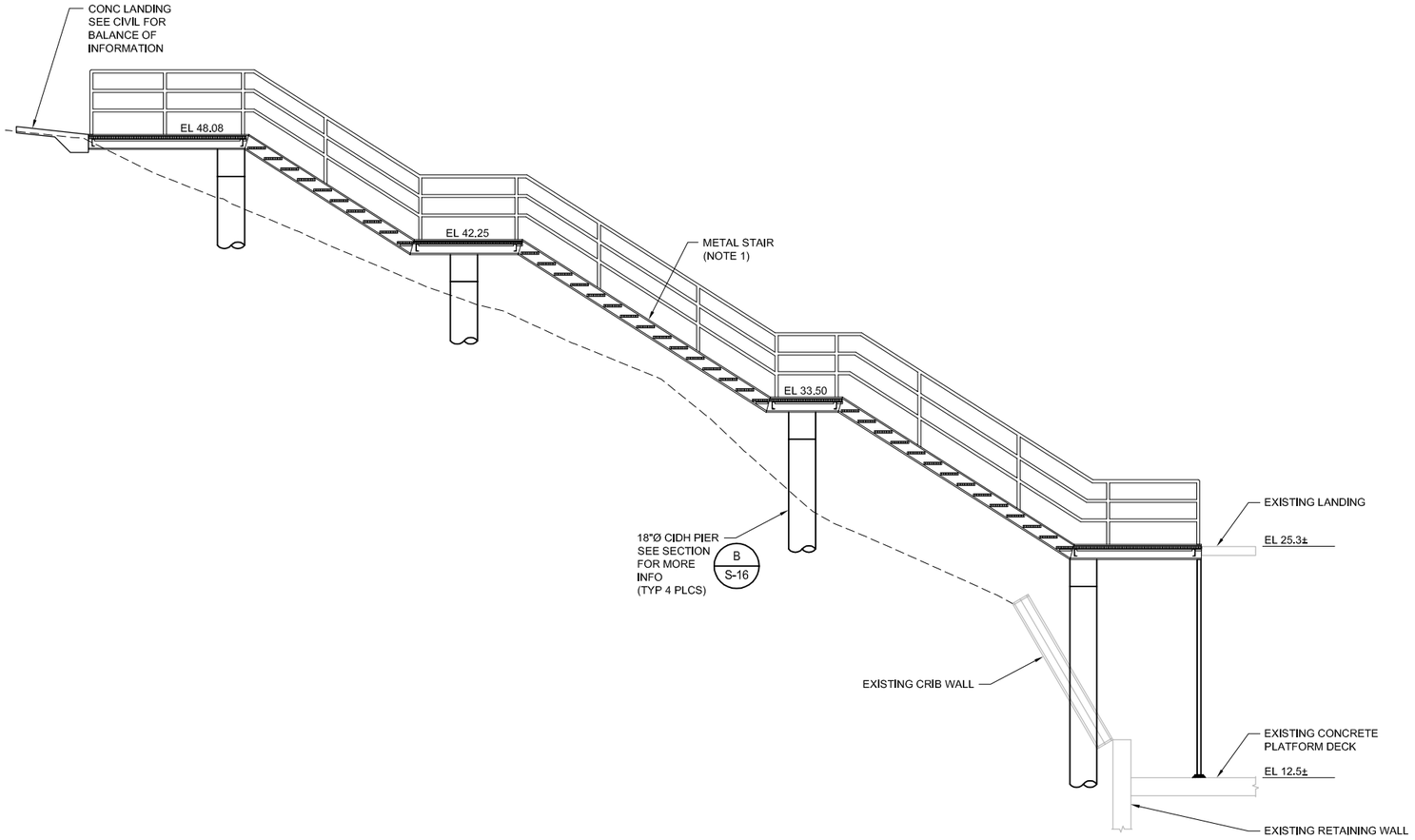

SECTION A
SCALE: 1/4"=1'-0" S-16

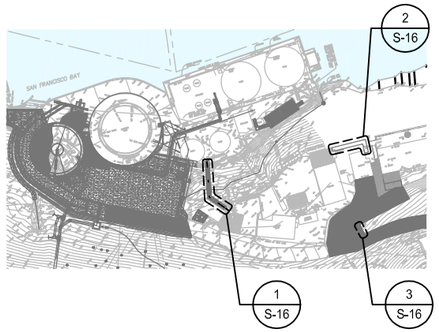

STAIR KEY PLAN

NOTE:

1. MEMBER SIZES SHOWN ON SHEETS ARE MINIMUM SIZES. ACTUAL SIZES SHALL BE DETERMINED BY THE CONTRACTOR.
2. THE DESIGN OF STAIRS IS A DEFERRED SUBMITTAL ITEM AND IS THE RESPONSIBILITY OF THE CONTRACTOR. THE DEFERRED SUBMITTAL DESIGN SHALL BE SUBMITTED TO THE DESIGN PROFESSIONAL IN RESPONSIBLE CHARGE FOR REVIEW FOR GENERAL CONFORMANCE TO THE STRUCTURAL DESIGN CRITERIA. INSTALLATION OF THE STAIRS SHALL NOT BEGIN UNTIL THE SUBMITTAL HAS BEEN REVIEWED BY THE DESIGN PROFESSIONAL IN RESPONSIBLE CHARGE AND HAS BEEN FOUND TO BE IN GENERAL CONFORMANCE WITH THE DESIGN OF THE PROJECT AND THE SUBMITTAL HAS BEEN DEEMED ACCEPTABLE BY THE OWNER.
3. ALL MATERIALS FOR STAIRS SHALL BE ALUMINUM UON.
4. WIDTH OF STAIR SHOWN ON DRAWINGS IS THE DISTANCE BETWEEN STRINGERS.

REGISTERED PROFESSIONAL ENGINEER
No. S 5320
EXP. 09/30/17
STRUCTURAL
STATE OF CALIFORNIA
11/17/16

0" 1"
VERIFY SCALES
BAR IS ONE INCH LONG ON FULL SIZE DRAWING. IF NOT ONE INCH LONG ON THIS DRAWING, ADJUST SCALES ACCORDINGLY

TJC and ASSOCIATES, INC.

RMC
Water and Environment

REV	DATE	BY	APVD	DESCRIPTION
△				
△				
△				
△				
△				

DESIGNED	RKT
DRAWN	ADM
CHECKED	TJC

SUBMITTED: MARK TAKEMOTO
RMC PROJ ENGR CE-64369

APPROVED: STEVE CLARY
RMC ENGR CE-30318

SAUSALITO · MARIN CITY SANITARY DISTRICT

TREATMENT AND WET WEATHER FLOW UPGRADE

STAIR SECTIONS

DWG NO	S-17
SHEET NO	95 OF 226
PROJ NO	055-006
DATE	NOVEMBER 2016

FILENAME: 0055-006-S17 11-17-16 05:04pm andria || XREFS: | X-SMCSD-TBLK | RKT California | S-HEADWORKS-SECT | X-Site | X-Topo Survey | RKT_SIG |<<--

Last Saved By: andria 11-17-16 01:58pm

W:\TJCAA - 2008 Projects\108049 - RMC, SMCSD Headworks\108049 - Stru\ 0055-006-S17 11/17/16 13:55 andria XREFS: X-SMCSD-TBLK, RKT California, S-HEADWORKS-SECT, X-Site, X-Topo Survey

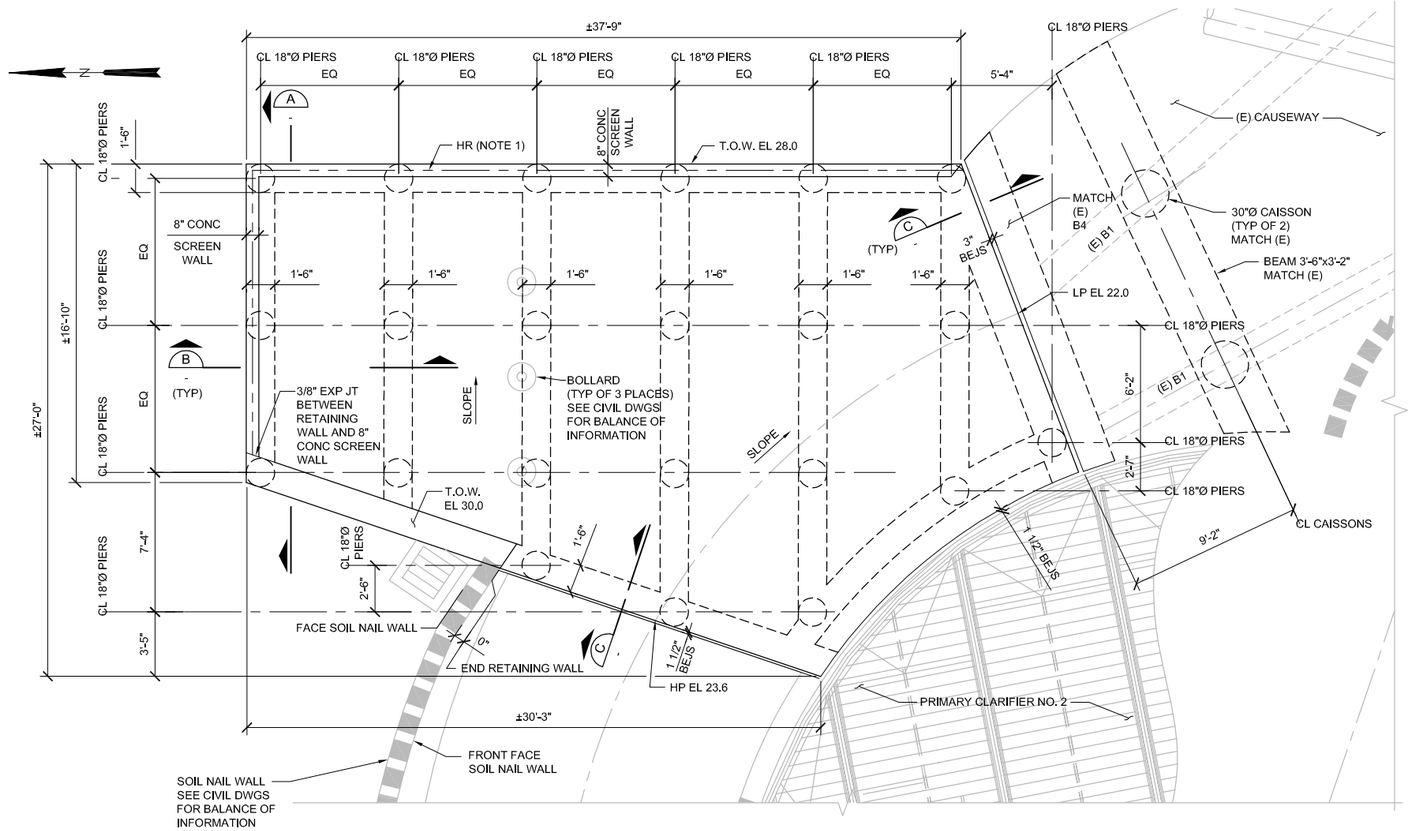

VIEWING AREA PLAN

SCALE: 1/4"=1'-0"

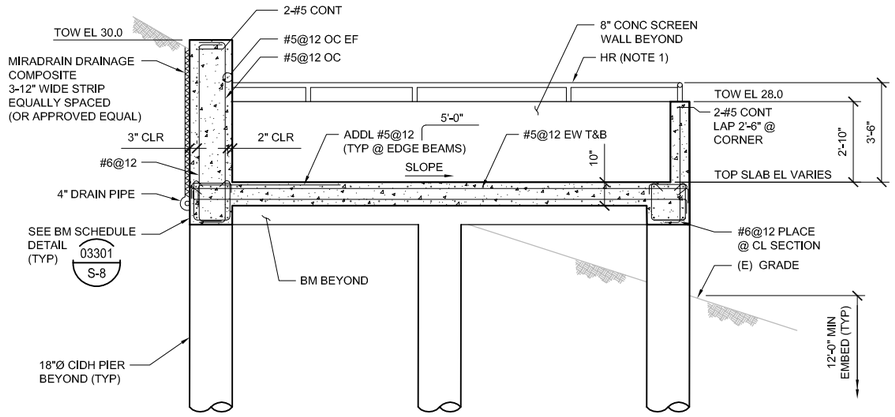

SECTION A

SCALE: 3/8"=1'-0"

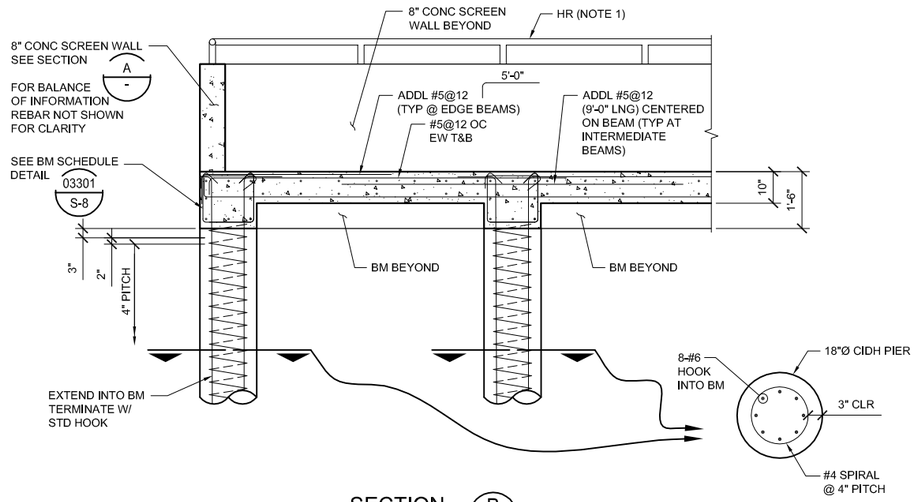

SECTION B

SCALE: 1/2"=1'-0"

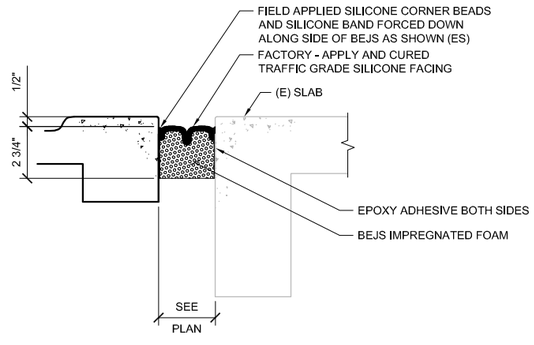

EMSEAL - BRIDGE EXPANSION JOINT SYSTEM (BEJS) OR APPROVED EQUAL

SECTION C

SCALE: NTS

NOTES:

1. HANDRAIL IS A DEFERRED SUBMITTAL ITEM AND IS THE RESPONSIBILITY OF THE CONTRACTOR. DEFERRED SUBMITTAL ITEMS HAVE NOT BEEN DESIGNED BY THE ENGINEER OF RECORD, REFER TO CONTRACT DOCUMENTS FOR ADDITIONAL INFORMATION.

REGISTERED PROFESSIONAL ENGINEER — No. S 5320 — EXP. 09/30/17 — STRUCTURAL — STATE OF CALIFORNIA

11/17/16

0" 1" VERIFY SCALES BAR IS ONE INCH LONG ON FULL SIZE DRAWING. IF NOT ONE INCH LONG ON THIS DRAWING, ADJUST SCALES ACCORDINGLY

TJC and ASSOCIATES, INC.

RMC Water and Environment

REV	DATE	BY	APVD	DESCRIPTION

DESIGNED	RKT
DRAWN	ADM
CHECKED	DMY

SUBMITTED: MARK TAKEMOTO — RMC PROJ ENGR — CE-64369

APPROVED: STEVE CLARY — RMC ENGR — CE-30318

SAUSALITO · MARIN CITY SANITARY DISTRICT

TREATMENT AND WET WEATHER FLOW UPGRADE

VIEWING AREA

DWG NO	S030-1
SHEET NO	96 OF 226
PROJ NO	055-006
DATE	NOVEMBER 2016

FILENAME: 0055-006-S030-01 11-17-16 05:06pm andria | XREFS: | S-VIEW_AREA-PLAN-SECT | X-Site | X-SMCSD-TBLK | RKT California | RKT_SIG |<<--

Last Saved By: bee 11-16-16 03:05pm

W:\TJCAA - 2008 Projects\108049 - RMC, SMCSD Headworks\108049 - Stru\ 0055-006-S030-01 11/09/16 10:04 andria XREFS: S-VIEW_AREA-PLAN-SECT, X-Site, X-SMCSD-TBLK, RKT California

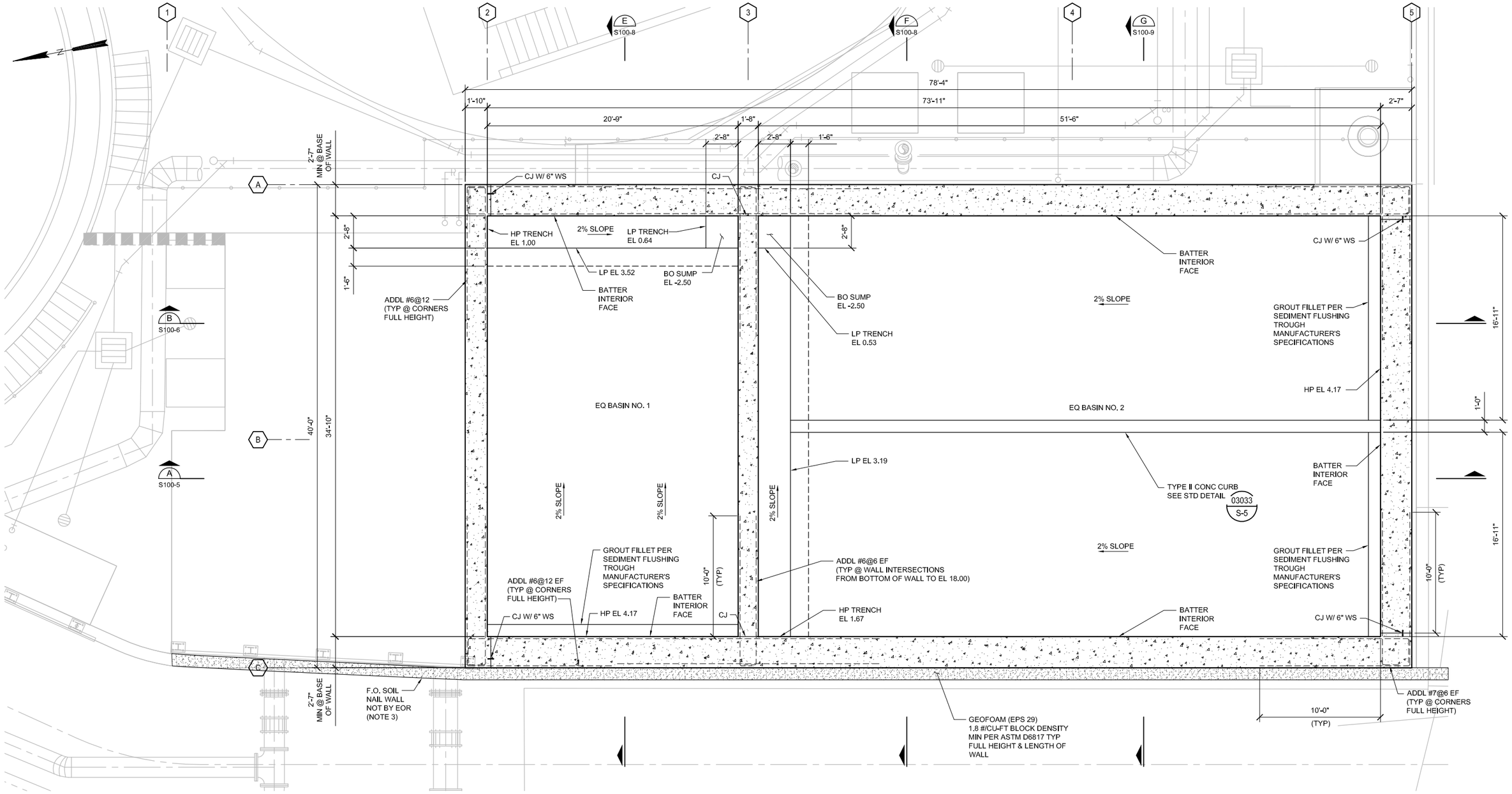

EQ BASIN FOUNDATION PLAN EL 4.17

SCALE: 1/4"=1'-0"

NOTES:

1. ALL CORNERS AND INTERSECTIONS SHALL HAVE "ADDED" WALL REINFORCEMENT AS SHOWN ON STANDARD DETAILS 3001 & 3002.
2. SEE ARCHITECTURAL DRAWINGS FOR EXTENT OF TEXTURED CONCRETE WALL AREAS. COORDINATE WALL REINFORCEMENT WITH STANDARD DETAIL 03040 TO ENSURE PROPER CONCRETE COVER.
3. ANCHOR DOWELS/ANCHORAGE DEVICE SHALL NOT BE EMBEDDED WITHIN THE CONCRETE OF THE STRUCTURE.

REGISTERED PROFESSIONAL ENGINEER No. S 5320 EXP. 09/30/17 STRUCTURAL STATE OF CALIFORNIA

11/17/16

0" 1" VERIFY SCALES BAR IS ONE INCH LONG ON FULL SIZE DRAWING. IF NOT ONE INCH LONG ON THIS DRAWING, ADJUST SCALES ACCORDINGLY

TJC

RMC Water and Environment

REV	DATE	BY	APVD	DESCRIPTION

DESIGNED	RKT
DRAWN	ADM
CHECKED	DMY

SUBMITTED: MARK TAKEMOTO, RMC PROJ ENGR, CE-64369

APPROVED: STEVE CLARY, RMC ENGR, CE-30318

SAUSALITO · MARIN CITY SANITARY DISTRICT

TREATMENT AND WET WEATHER FLOW UPGRADE

EQ BASIN FOUNDATION PLAN EL 4.17

DWG NO	S100-1
SHEET NO	97 OF 226
PROJ NO	055-006
DATE	NOVEMBER 2016

FILENAME: 0055-006-S100-01 11-17-16 05:08pm andria || XREFS: | X-SMCSD-TBLK | S-HEADWORKS-PLAN | X-SitePlan | X-Treatment Plant site plan | X-Topo Survey new | X-Site | RKT California | RKT_SIG |<<--

Last Saved By: andria 11-16-16 01:15pm

W:\TJCAA - 2008 Projects\108049 - RMC, SMCSD Headworks\108049 - Stru\ 0055-006-S100-01 03/10/16 13:45 andria XREFS: X-SMCSD-TBLK, S-HEADWORKS-PLAN, X-SitePlan, X-Treatment Plant site plan, X-Topo Survey new, X-Site, RKT California

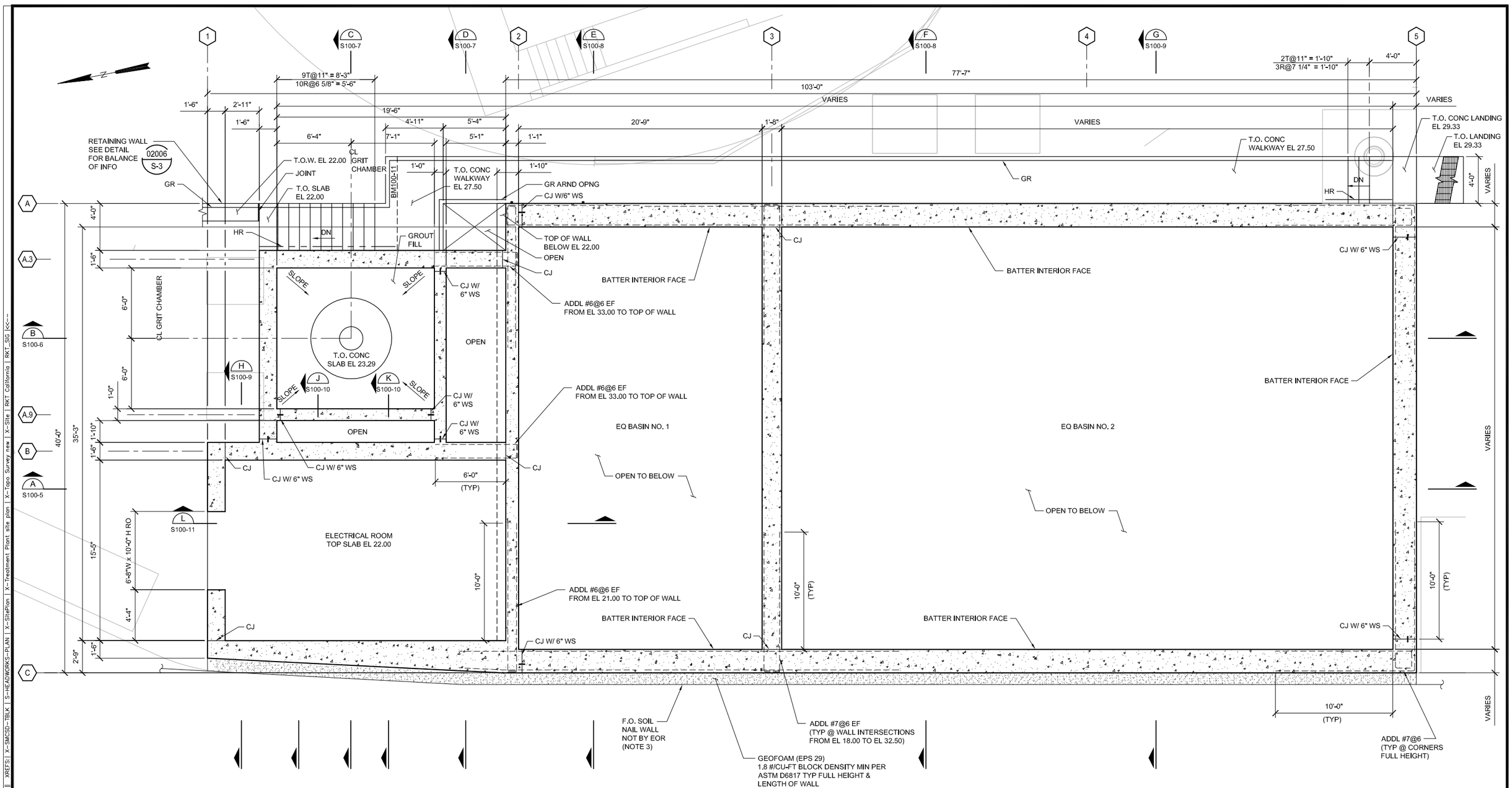

HEADWORKS/EQ BASIN FOUNDATION PLAN EL 29.50

SCALE: 1/4"=1'-0"

NOTES:

1. ALL CORNERS AND INTERSECTIONS SHALL HAVE "ADDED" WALL REINFORCEMENT AS SHOWN ON STANDARD DETAILS 3001 & 3002.
2. SEE ARCHITECTURAL DRAWINGS FOR EXTENT OF TEXTURED CONCRETE WALL AREAS. COORDINATE WALL REINFORCEMENT WITH STANDARD DETAIL 03040 TO ENSURE PROPER CONCRETE COVER.
3. ANCHOR DOWELS/ANCHORAGE DEVICE SHALL NOT BE EMBEDDED WITHIN THE CONCRETE OF THE STRUCTURE.

REGISTERED PROFESSIONAL ENGINEER — RICHARD K. TAKEMOTO — No. S 5320 — EXP. 09/30/17 — STRUCTURAL — STATE OF CALIFORNIA
11/17/16

0" 1" — VERIFY SCALES BAR IS ONE INCH LONG ON FULL SIZE DRAWING. IF NOT ONE INCH LONG ON THIS DRAWING, ADJUST SCALES ACCORDINGLY

TJC and ASSOCIATES, INC.

RMC Water and Environment

REV	DATE	BY	APVD	DESCRIPTION

DESIGNED	RKT
DRAWN	ADM
CHECKED	DMY

SUBMITTED: MARK TAKEMOTO — RMC PROJ ENGR — CE-64369
APPROVED: STEVE CLARY — RMC ENGR — CE-30318

SAUSALITO · MARIN CITY SANITARY DISTRICT

TREATMENT AND WET WEATHER FLOW UPGRADE

HEADWORKS
FOUNDATION PLAN EL 29.50

DWG NO	S100-2
SHEET NO	98 OF 226
PROJ NO	055-006
DATE	NOVEMBER 2016

FILENAME: 0055-006-S100-02 11-17-16 05:08pm andria || XREFS: | X-SMCSD-TBLK | S-HEADWORKS-PLAN | X-SitePlan | X-Treatment Plant site plan | X-Topo Survey new | X-Site | RKT California | RKT_SIG |<<--

Last Saved By: andria 11-16-16 02:08pm

W:\TJCAA - 2008 Projects\108049 - RMC, SMCSD Headworks\108049 - Stru\ 0055-006-S100-02 03/10/16 10:15 andria XREFS: X-SMCSD-TBLK, S-HEADWORKS-PLAN, X-SitePlan, X-Treatment Plant site plan, X-Topo Survey new, X-Site, RKT California

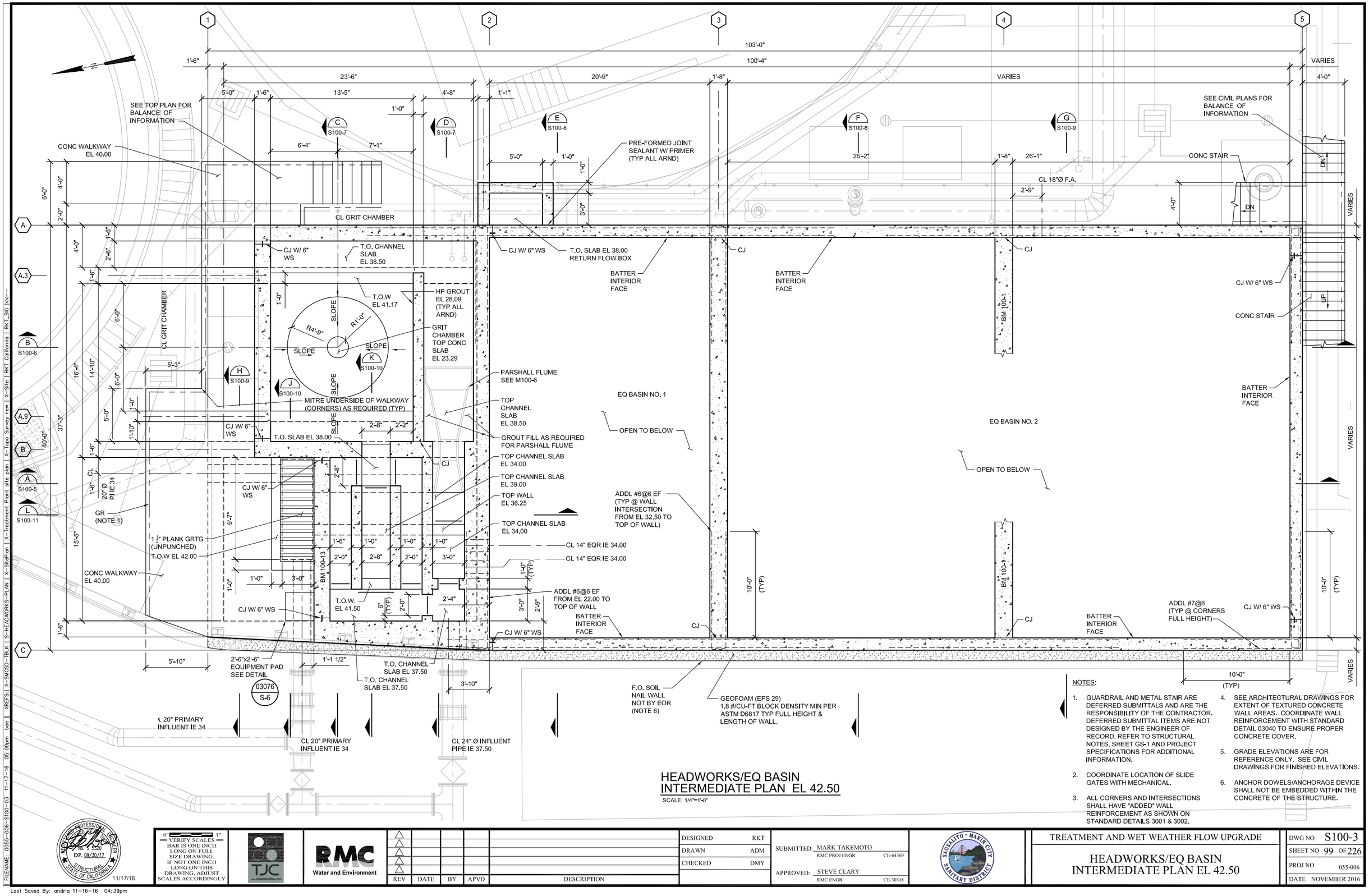

NOTES:

1. GUARDRAIL AND METAL STAIR ARE DEFERRED SUBMITTALS AND ARE THE RESPONSIBILITY OF THE CONTRACTOR. DEFERRED SUBMITTAL ITEMS ARE NOT DESIGNED BY THE ENGINEER OF RECORD, REFER TO STRUCTURAL NOTES, SHEET GS-1 AND PROJECT SPECIFICATIONS FOR ADDITIONAL INFORMATION.
2. COORDINATE LOCATION OF SLIDE GATES WITH MECHANICAL.
3. ALL CORNERS AND INTERSECTIONS SHALL HAVE "ADDED" WALL REINFORCEMENT AS SHOWN ON STANDARD DETAILS 3001 & 3002.
4. SEE ARCHITECTURAL DRAWINGS FOR EXTENT OF TEXTURED CONCRETE WALL AREAS. COORDINATE WALL REINFORCEMENT WITH STANDARD DETAIL 03040 TO ENSURE PROPER CONCRETE COVER.
5. GRADE ELEVATIONS ARE FOR REFERENCE ONLY. SEE CIVIL DRAWINGS FOR FINISHED ELEVATIONS.
6. ANCHOR DOWELS/ANCHORAGE DEVICE SHALL NOT BE EMBEDDED WITHIN THE CONCRETE OF THE STRUCTURE.

HEADWORKS/EQ BASIN INTERMEDIATE PLAN EL 42.50

SCALE: 1/4"=1'-0"

STEVEN J. CLARY — No. S 3220 — EXP. 09/30/17 — STRUCTURAL — STATE OF CALIFORNIA — PROFESSIONAL ENGINEER

11/17/16

0" 1" — VERIFY SCALES BAR IS ONE INCH LONG ON FULL SIZE DRAWING. IF NOT ONE INCH LONG ON THIS DRAWING, ADJUST SCALES ACCORDINGLY

TJC an ASSOCIATES, Inc.

RMC Water and Environment

REV	DATE	BY	APVD	DESCRIPTION

DESIGNED	RKT
DRAWN	ADM
CHECKED	DMY

SUBMITTED: MARK TAKEMOTO, RMC PROJ ENGR, CE-64369

APPROVED: STEVE CLARY, RMC ENGR, CE-30318

SAUSALITO · MARIN CITY SANITARY DISTRICT

TREATMENT AND WET WEATHER FLOW UPGRADE

HEADWORKS/EQ BASIN INTERMEDIATE PLAN EL 42.50

DWG NO	S100-3
SHEET NO	99 OF 226
PROJ NO	055-006
DATE	NOVEMBER 2016

FILENAME: 0055-006-S100-03 11-17-16 05:09pm bee || XREFS:| X-SMCSD-TBLK | S-HEADWORKS-PLAN | X-SitePlan | X-Treatment Plant site plan | X-Topo Survey new | X-Site | RKT California | RKT_SIG |<<--

XREFS: X-SMCSD-TBLK, S-HEADWORKS-PLAN, X-SitePlan, X-Treatment Plant site plan, X-Topo Survey new, X-Site, RKT California, RKT_SIG

W:\TJCAA - 2008 Projects\108049 - RMC, SMCSD Headworks\108049 - Stru\ 0055-006-S100-03 11/17/16 17:09 bee

Last Saved By: andria 11-16-16 04:39pm

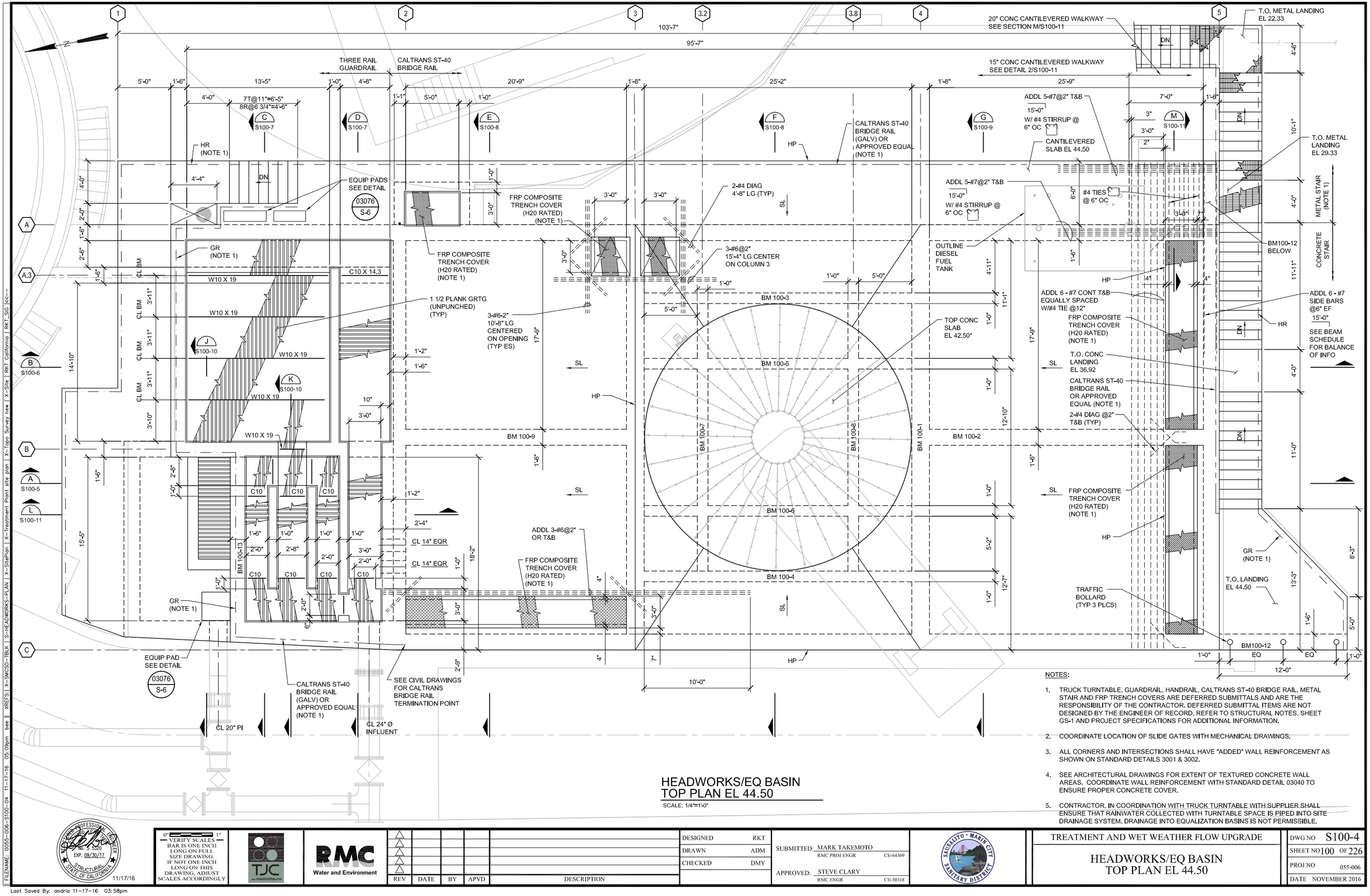

HEADWORKS/EQ BASIN TOP PLAN EL 44.50

SCALE: 1/4"=1'-0"

NOTES:

1. TRUCK TURNTABLE, GUARDRAIL, HANDRAIL, CALTRANS ST-40 BRIDGE RAIL, METAL STAIR AND FRP TRENCH COVERS ARE DEFERRED SUBMITTALS AND ARE THE RESPONSIBILITY OF THE CONTRACTOR. DEFERRED SUBMITTAL ITEMS ARE NOT DESIGNED BY THE ENGINEER OF RECORD, REFER TO STRUCTURAL NOTES, SHEET GS-1 AND PROJECT SPECIFICATIONS FOR ADDITIONAL INFORMATION.
2. COORDINATE LOCATION OF SLIDE GATES WITH MECHANICAL DRAWINGS.
3. ALL CORNERS AND INTERSECTIONS SHALL HAVE "ADDED" WALL REINFORCEMENT AS SHOWN ON STANDARD DETAILS 3001 & 3002.
4. SEE ARCHITECTURAL DRAWINGS FOR EXTENT OF TEXTURED CONCRETE WALL AREAS. COORDINATE WALL REINFORCEMENT WITH STANDARD DETAIL 03040 TO ENSURE PROPER CONCRETE COVER.
5. CONTRACTOR, IN COORDINATION WITH TRUCK TURNTABLE WITH SUPPLIER SHALL ENSURE THAT RAINWATER COLLECTED WITH TURNTABLE SPACE IS PIPED INTO SITE DRAINAGE SYSTEM. DRAINAGE INTO EQUALIZATION BASINS IS NOT PERMISSIBLE.

REGISTERED PROFESSIONAL ENGINEER — No. S 5320 — EXP. 09/30/17 — STRUCTURAL — STATE OF CALIFORNIA
11/17/16

0" 1" VERIFY SCALES BAR IS ONE INCH LONG ON FULL SIZE DRAWING. IF NOT ONE INCH LONG ON THIS DRAWING, ADJUST SCALES ACCORDINGLY

TJC and ASSOCIATES, INC.

RMC Water and Environment

REV	DATE	BY	APVD	DESCRIPTION

DESIGNED	RKT
DRAWN	ADM
CHECKED	DMY

SUBMITTED: MARK TAKEMOTO — RMC PROJ ENGR — CE-64369
APPROVED: STEVE CLARY — RMC ENGR — CE-30318

SAUSALITO · MARIN CITY SANITARY DISTRICT

TREATMENT AND WET WEATHER FLOW UPGRADE

HEADWORKS/EQ BASIN TOP PLAN EL 44.50

DWG NO	S100-4
SHEET NO	100 OF 226
PROJ NO	055-006
DATE	NOVEMBER 2016

FILENAME: 0055-006-S100-04 11-17-16 05:09pm bee || XREFS: | X-SMCSD-TBLK | S-HEADWORKS-PLAN | X-SitePlan | X-Treatment Plant site plan | X-Topo Survey new | X-Site | RKT California | RKT_SIG |<<--

Last Saved By: andria 11-17-16 03:58pm

W:\TJCAA - 2008 Projects\108049 - RMC, SMCSD Headworks\108049 - Str\ 0055-006-S100-04 11/17/16 17:09 bee XREFS: X-SMCSD-TBLK, S-HEADWORKS-PLAN, X-SitePlan, X-Treatment Plant site plan, X-Topo Survey new, X-Site, RKT California, RKT_SIG

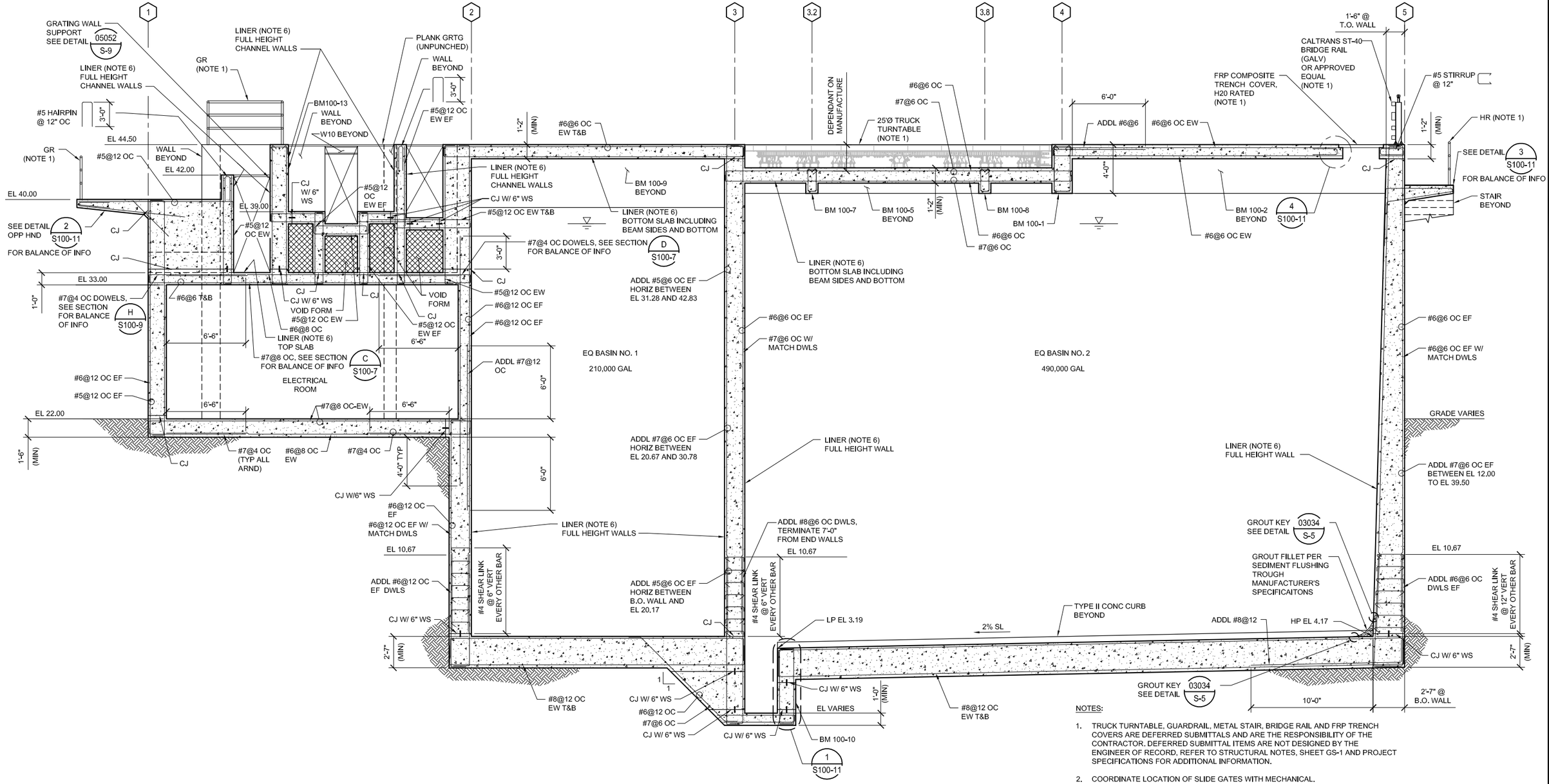

SECTION A

SCALE: 1/4"=1'-0" S100-1,2&3

NOTES:

1. TRUCK TURNTABLE, GUARDRAIL, METAL STAIR, BRIDGE RAIL AND FRP TRENCH COVERS ARE DEFERRED SUBMITTALS AND ARE THE RESPONSIBILITY OF THE CONTRACTOR. DEFERRED SUBMITTAL ITEMS ARE NOT DESIGNED BY THE ENGINEER OF RECORD, REFER TO STRUCTURAL NOTES, SHEET GS-1 AND PROJECT SPECIFICATIONS FOR ADDITIONAL INFORMATION.
2. COORDINATE LOCATION OF SLIDE GATES WITH MECHANICAL.
3. ALL CORNERS AND INTERSECTIONS SHALL HAVE "ADDED" WALL REINFORCEMENT AS SHOWN ON STANDARD DETAILS 3001 & 3002.
4. SEE ARCHITECTURAL DRAWINGS FOR EXTENT OF TEXTURED CONCRETE WALL AREAS. COORDINATE WALL REINFORCEMENT WITH STANDARD DETAIL 03040 TO ENSURE PROPER CONCRETE COVER.
5. GRADE ELEVATIONS ARE FOR REFERENCE ONLY. SEE CIVIL DRAWINGS FOR FINISHED ELEVATIONS.
6. APPLY PVC LINING SYSTEM AS INDICATED. REFER TO TECHNICAL SPECIFICATION FOR ADDITIONAL INFORMATION.

STRUCTURAL PROFESSIONAL ENGINEER No. S 5320 EXP. 09/30/17 STRUCTURAL STATE OF CALIFORNIA
11/17/16

0" 1" VERIFY SCALES BAR IS ONE INCH LONG ON FULL SIZE DRAWING. IF NOT ONE INCH LONG ON THIS DRAWING, ADJUST SCALES ACCORDINGLY

TJC and ASSOCIATES, INC.

RMC Water and Environment

REV	DATE	BY	APVD	DESCRIPTION
1				
2				
3				
4				
5				

DESIGNED	RKT
DRAWN	ADM
CHECKED	DMY

SUBMITTED: MARK TAKEMOTO, RMC PROJ ENGR, CE-64369

APPROVED: STEVE CLARY, RMC ENGR, CE-30318

SAUSALITO · MARIN CITY SANITARY DISTRICT

TREATMENT AND WET WEATHER FLOW UPGRADE

HEADWORKS/EQ BASIN SECTION A

DWG NO	S100-5
SHEET NO	101 OF 226
PROJ NO	055-006
DATE	NOVEMBER 2016

FILENAME: 0055-006-S100-05 11-17-16 05:08pm bee || XREFS: | X-SMCSD-TBLK | S-HEADWORKS-SECT | RKT California | RKT_SIG |<--

W:\1ACAD - 2008 Projects\108049 - RMC, SMCSD Headworks\108049 - Stru\ 0055-006-S100-05 11/17/16 17:08 bee XREFS: X-SMCSD-TBLK, S-HEADWORKS-SECT, RKT California, RKT_SIG

Last Saved By: andria 11-17-16 02:42pm

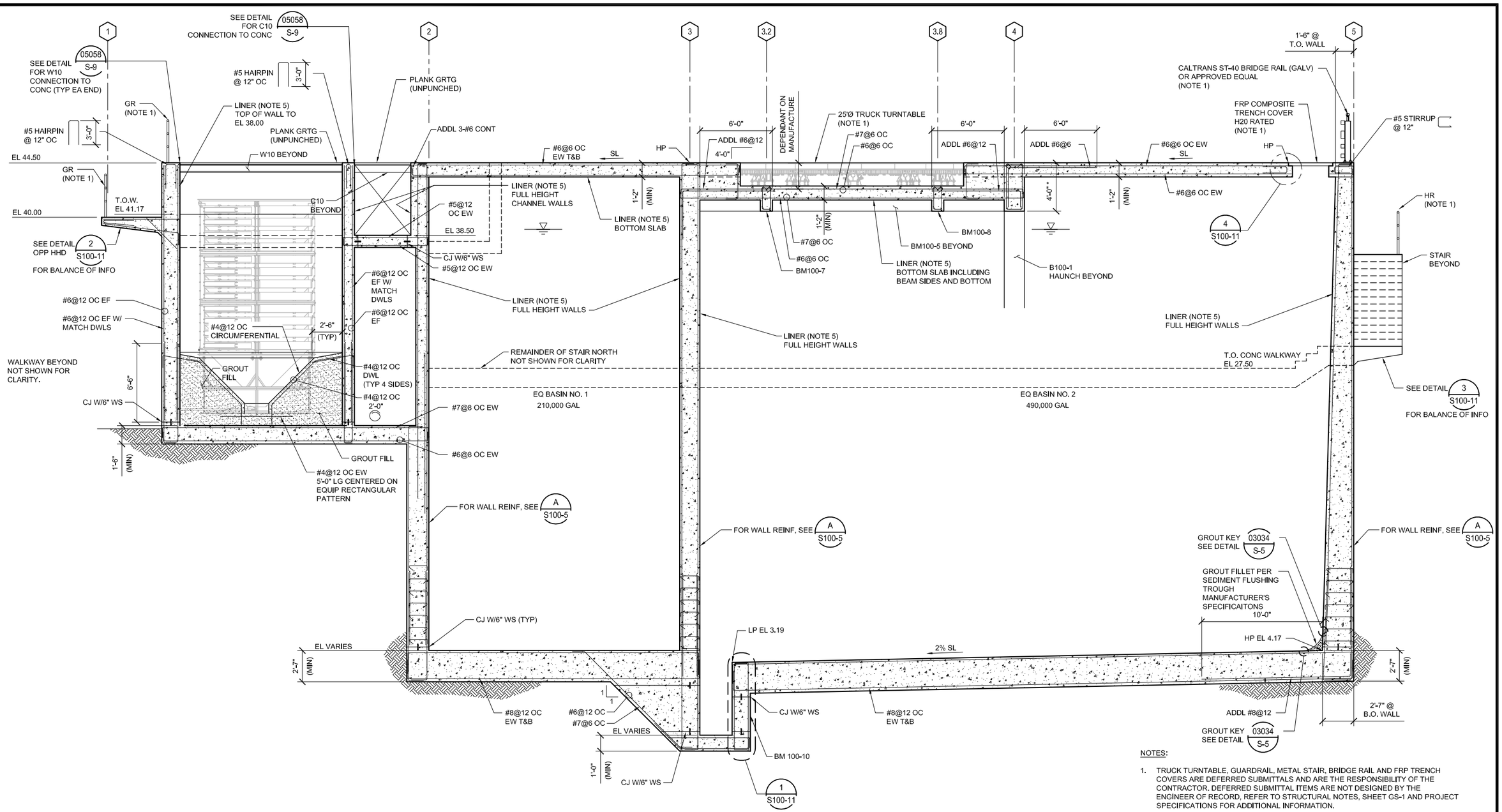

SECTION B

SCALE: 1/4"=1'-0" S100-1,2&3

NOTES:

1. TRUCK TURNTABLE, GUARDRAIL, METAL STAIR, BRIDGE RAIL AND FRP TRENCH COVERS ARE DEFERRED SUBMITTALS AND ARE THE RESPONSIBILITY OF THE CONTRACTOR. DEFERRED SUBMITTAL ITEMS ARE NOT DESIGNED BY THE ENGINEER OF RECORD, REFER TO STRUCTURAL NOTES, SHEET GS-1 AND PROJECT SPECIFICATIONS FOR ADDITIONAL INFORMATION.
2. COORDINATE LOCATION OF SLIDE GATES WITH MECHANICAL.
3. ALL CORNERS AND INTERSECTIONS SHALL HAVE "ADDED" WALL REINFORCEMENT AS SHOWN ON STANDARD DETAILS 3001 & 3002.
4. SEE ARCHITECTURAL DRAWINGS FOR EXTENT OF TEXTURED CONCRETE WALL AREAS. COORDINATE WALL REINFORCEMENT WITH STANDARD DETAIL 03040 TO ENSURE PROPER CONCRETE COVER.
5. APPLY PVC LINING SYSTEM AS INDICATED. REFER TO TECHNICAL SPECIFICATION FOR ADDITIONAL INFORMATION.

STRUCTURAL ENGINEER — STATE OF CALIFORNIA — No. S5200 — EXP. 09/30/17 — 11/17/16

0" 1" VERIFY SCALES BAR IS ONE INCH LONG ON FULL SIZE DRAWING. IF NOT ONE INCH LONG ON THIS DRAWING, ADJUST SCALES ACCORDINGLY

TJC an ARCADIS company

RMC Water and Environment

REV	DATE	BY	APVD	DESCRIPTION

DESIGNED	RKT
DRAWN	ADM
CHECKED	DMY

SUBMITTED: MARK TAKEMOTO, RMC PROJ ENGR, CE-64369

APPROVED: STEVE CLARY, RMC ENGR, CE-30318

SAUSALITO · MARIN CITY SANITARY DISTRICT

TREATMENT AND WET WEATHER FLOW UPGRADE

HEADWORKS/EQ BASIN SECTION B

DWG NO	S100-6
SHEET NO	102 OF 226
PROJ NO	055-006
DATE	NOVEMBER 2016

FILENAME: 0055-006-S100-06 11-17-16 05:07pm bee || XREFS: X-SMCSD-TBLK | S-HEADWORKS-SECT | RKT California | RKT_SIG |<--

W:\TJCAA - 2008 Projects\108049 - RMC, SMCSD Headworks\108049 - Stru\ 0055-006-S100-06 11/17/16 17:07 bee XREFS: X-SMCSD-TBLK, S-HEADWORKS-SECT, RKT California, RKT_SIG

Last Saved By: andria 11-17-16 02:54pm

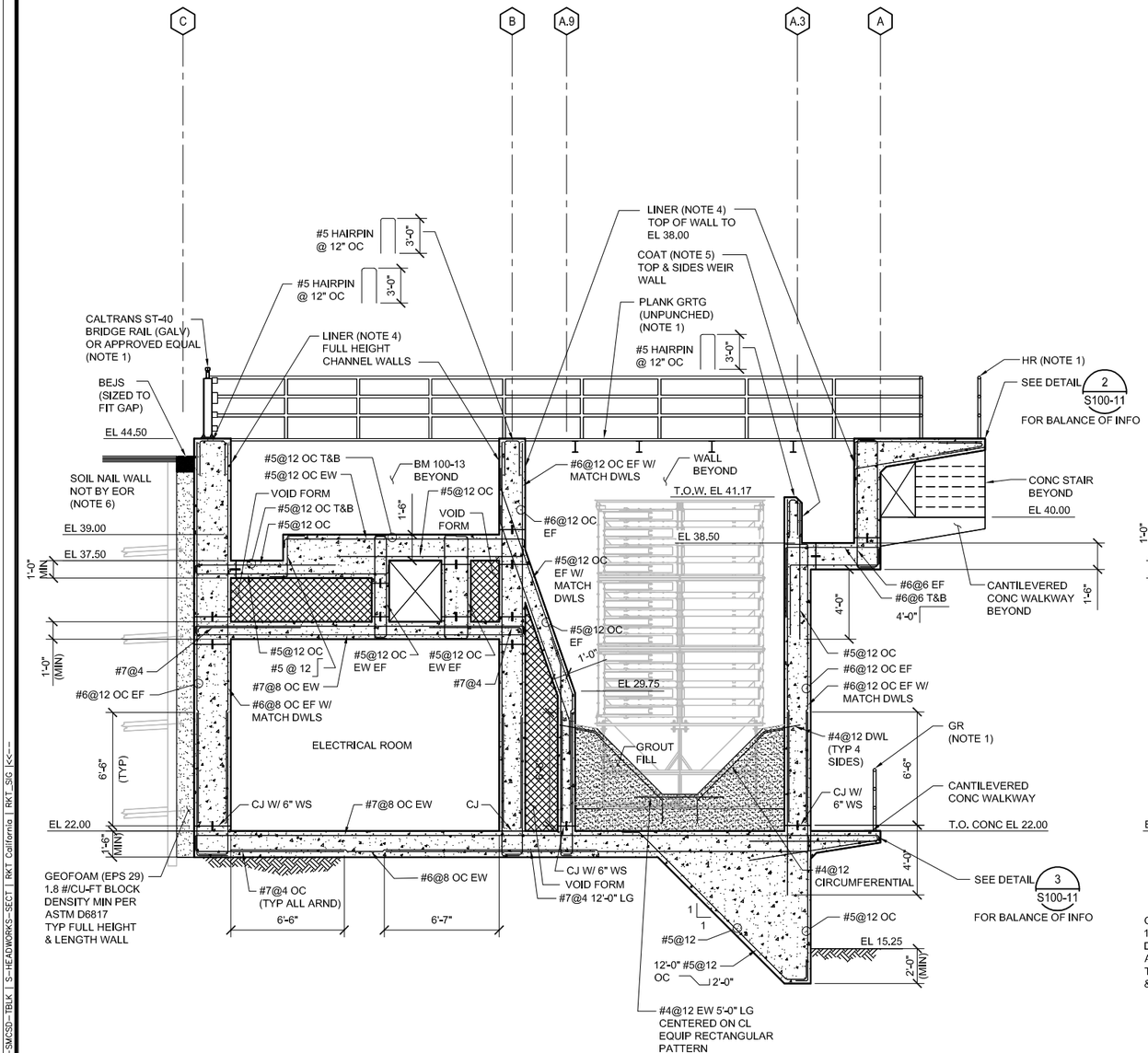

SECTION C
SCALE: 1/4"=1'-0" S100-1,2&3

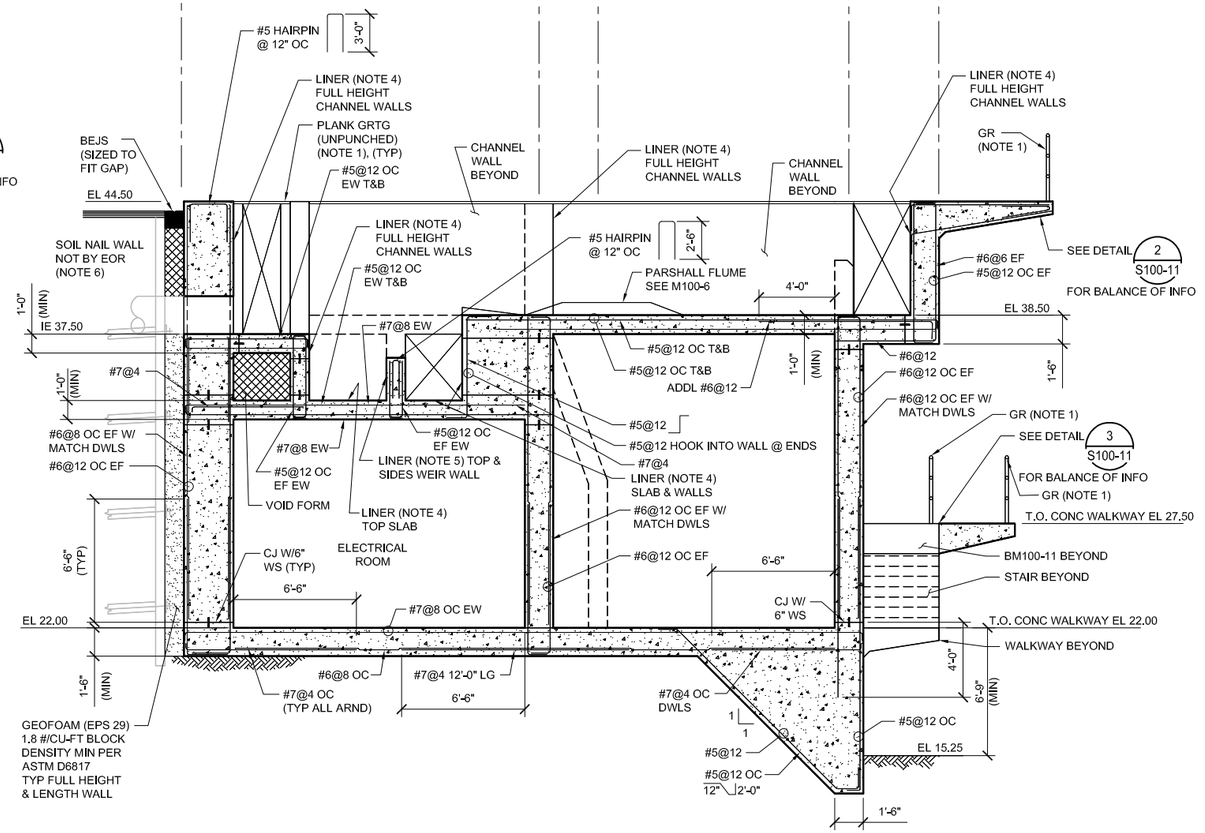

SECTION D
SCALE: 1/4"=1'-0" S100-1,2&3

NOTES:

1. GUARDRAIL AND BRIDGE RAIL ARE DEFERRED SUBMITTAL AND ARE THE RESPONSIBILITY OF THE CONTRACTOR. DEFERRED SUBMITTAL ITEMS ARE NOT DESIGNED BY THE ENGINEER OF RECORD, REFER TO STRUCTURAL NOTES, SHEET GS-1 AND PROJECT SPECIFICATIONS FOR ADDITIONAL INFORMATION.
2. COORDINATE LOCATION OF SLIDE GATES WITH MECHANICAL.
3. ALL CORNERS AND INTERSECTIONS SHALL HAVE "ADDED" WALL REINFORCEMENT AS SHOWN ON STANDARD DETAILS 3001 & 3002.
4. APPLY PVC LINING SYSTEM AS INDICATED. REFER TO TECHNICAL SPECIFICATION FOR ADDITIONAL INFORMATION.
5. APPLY COATING SYSTEM (P100 OR APPROVED EQUAL) AS INDICATED. REFER TO TECHNICAL SPECIFICATION FOR ADDITIONAL INFORMATION.
6. ANCHOR DOWELS/ACHORAGE DEVICE SHALL NOT BE EMBEDDED WITHIN STRUCTURES CONCRETE.

REGISTERED PROFESSIONAL ENGINEER
No. S 5320
EXP. 09/30/17
STRUCTURAL
STATE OF CALIFORNIA
11/17/16

0" 1"
VERIFY SCALES
BAR IS ONE INCH LONG ON FULL SIZE DRAWING. IF NOT ONE INCH LONG ON THIS DRAWING, ADJUST SCALES ACCORDINGLY

TJC and ASSOCIATES, INC.

RMC Water and Environment

REV	DATE	BY	APVD	DESCRIPTION
1				
2				
3				
4				
5				

DESIGNED	RKT
DRAWN	ADM
CHECKED	DMY

SUBMITTED: MARK TAKEMOTO, RMC PROJ ENGR, CE-64369

APPROVED: STEVE CLARY, RMC ENGR, CE-30318

SAUSALITO · MARIN CITY SANITARY DISTRICT

TREATMENT AND WET WEATHER FLOW UPGRADE

HEADWORKS/EQ BASIN SECTIONS C & D

DWG NO	S100-7
SHEET NO	103 OF 226
PROJ NO	055-006
DATE	NOVEMBER 2016

FILENAME: 0055-006-S100-07 11-17-16 05:06pm bee || XREFS: X-SMCSD-TBLK | S-HEADWORKS-SECT | RKT California | RKT_SIG |<<--
Last Saved By: bee 11-17-16 11:36am
W:\1ACAD - 2008 Projects\108049 - RMC, SMCSD Headworks\108049 - Stru\ 0055-006-S100-07 11/17/16 17:05 bee XREFS: X-SMCSD-TBLK, S-HEADWORKS-SECT, RKT California, RKT_SIG

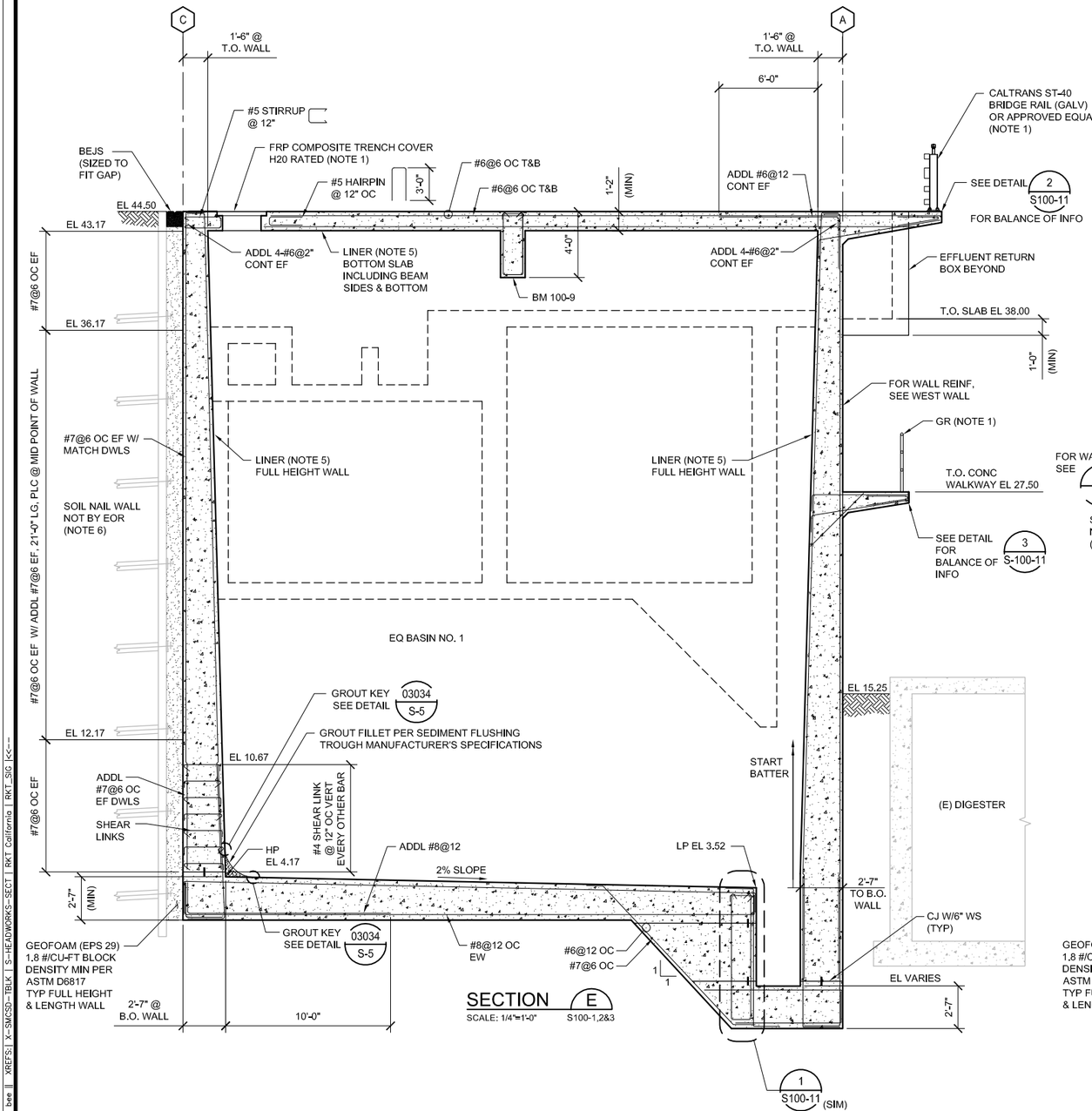

NOTES:

1. GUARDRAIL, BRIDGE RAIL AND FRP TRENCH COVER ARE DEFERRED SUBMITTALS AND ARE THE RESPONSIBILITY OF THE CONTRACTOR. DEFERRED SUBMITTAL ITEMS ARE NOT DESIGNED BY THE ENGINEER OF RECORD, REFER TO STRUCTURAL NOTES, SHEET GS-1 AND PROJECT SPECIFICATIONS FOR ADDITIONAL INFORMATION.
2. ALL CORNERS AND INTERSECTIONS SHALL HAVE "ADDED" WALL REINFORCEMENT AS SHOWN ON STANDARD DETAILS 3001 & 3002.
3. SEE ARCHITECTURAL DRAWINGS FOR EXTENT OF TEXTURED CONCRETE WALL AREAS. COORDINATE WALL REINFORCEMENT WITH STANDARD DETAIL 03040 TO ENSURE PROPER CONCRETE COVER.
4. GRADE ELEVATIONS ARE FOR REFERENCE ONLY. SEE CIVIL DRAWINGS FOR FINISHED ELEVATIONS.
5. APPLY PVC LINING SYSTEM AS INDICATED. REFER TO TECHNICAL SPECIFICATION FOR ADDITIONAL INFORMATION.
6. ANCHOR DOWELS/ACHORAGE DEVICE SHALL NOT BE EMBEDDED WITHIN STRUCTURES CONCRETE.

STEVEN CLARY No. S 3320 EXP. 09/30/17 STRUCTURAL STATE OF CALIFORNIA
11/17/16

0" 1" VERIFY SCALES BAR IS ONE INCH LONG ON FULL SIZE DRAWING. IF NOT ONE INCH LONG ON THIS DRAWING, ADJUST SCALES ACCORDINGLY

TJC and ASSOCIATES, INC.

RMC Water and Environment

REV	DATE	BY	APVD	DESCRIPTION

DESIGNED	RKT
DRAWN	ADM
CHECKED	DMY

SUBMITTED: MARK TAKEMOTO, RMC PROJ ENGR, CE-64369

APPROVED: STEVE CLARY, RMC ENGR, CE-30318

SAUSALITO · MARIN CITY SANITARY DISTRICT

TREATMENT AND WET WEATHER FLOW UPGRADE

HEADWORKS/EQ BASIN SECTIONS E & F

DWG NO	S100-8
SHEET NO	104 OF 226
PROJ NO	055-006
DATE	NOVEMBER 2016

FILENAME: 0055-006-S100-08 11-17-16 05:05pm bee || XREFS: X-SMCSD-TBLK | S-HEADWORKS-SECT | RKT California | RKT_SIG |<<--

Last Saved By: andria 11-17-16 03:00pm

W:\TJCA - 2008 Projects\108049 - RMC, SMCSD Headworks\108049 - Stru\ 0055-006-S100-08 11/17/16 17:04 bee XREFS: X-SMCSD-TBLK, S-HEADWORKS-SECT, RKT California, RKT_SIG

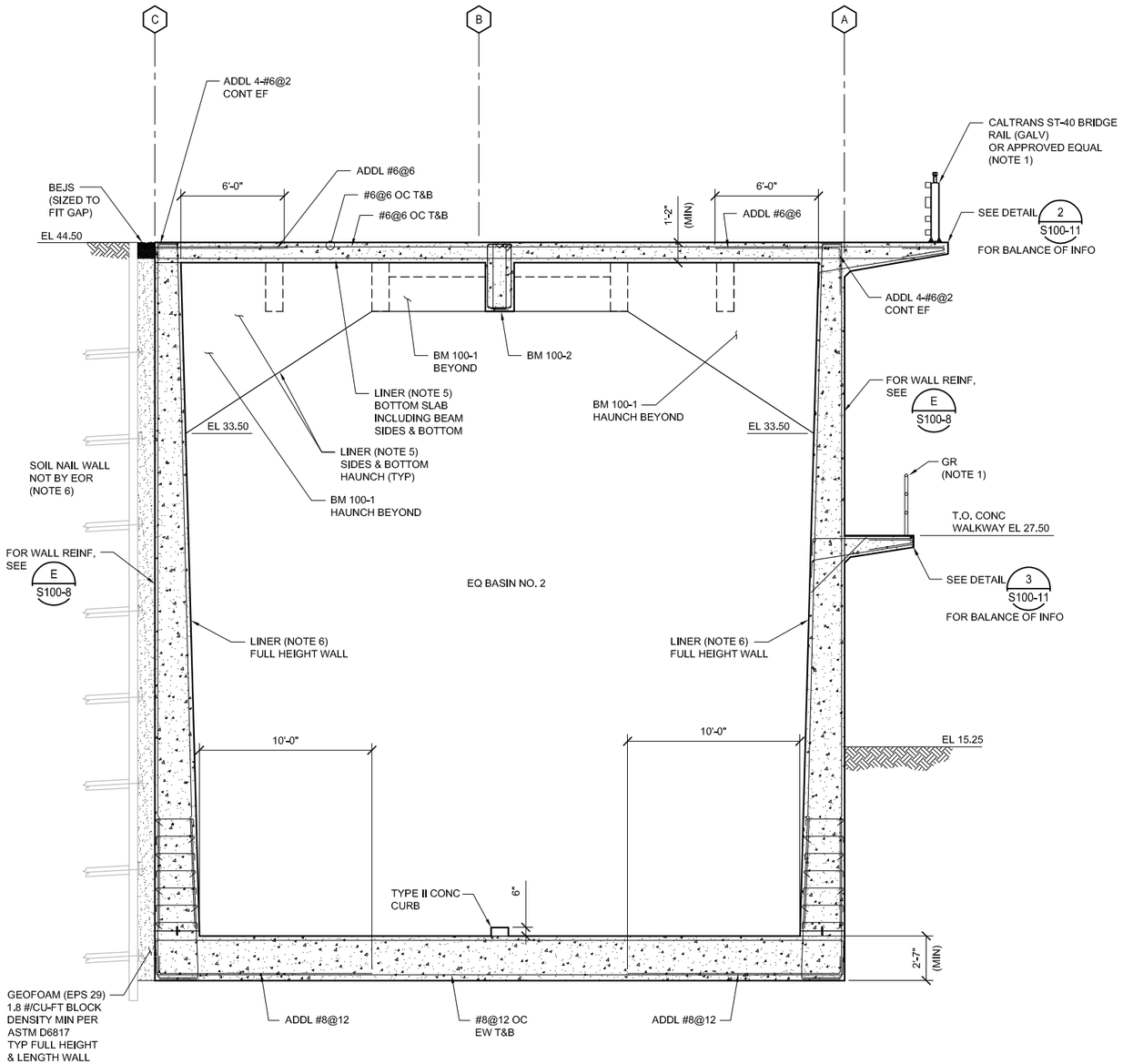

SECTION G
SCALE: 1/4"=1'-0" S100-1,2&3

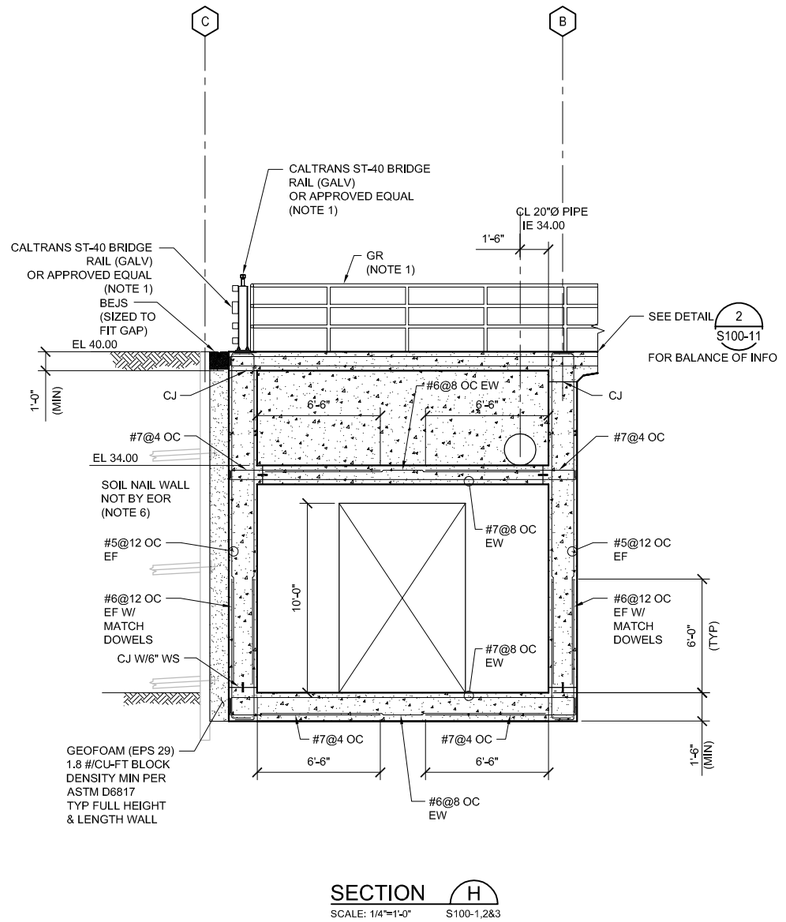

SECTION H
SCALE: 1/4"=1'-0" S100-1,2&3

NOTES:

1. GUARDRAIL AND BRIDGE RAIL ARE DEFERRED SUBMITTALS AND ARE THE RESPONSIBILITY OF THE CONTRACTOR. DEFERRED SUBMITTAL ITEMS ARE NOT DESIGNED BY THE ENGINEER OF RECORD, REFER TO STRUCTURAL NOTES, SHEET GS-1 AND PROJECT SPECIFICATIONS FOR ADDITIONAL INFORMATION.
2. ALL CORNERS AND INTERSECTIONS SHALL HAVE "ADDED" WALL REINFORCEMENT AS SHOWN ON STANDARD DETAILS 3001 & 3002.
3. SEE ARCHITECTURAL DRAWINGS FOR EXTENT OF TEXTURED CONCRETE WALL AREAS. COORDINATE WALL REINFORCEMENT WITH STANDARD DETAIL 03040 TO ENSURE PROPER CONCRETE COVER.
4. GRADE ELEVATIONS ARE FOR REFERENCE ONLY. SEE CIVIL DRAWINGS FOR FINISHED ELEVATIONS.
5. APPLY PVC LINING SYSTEM AS INDICATED. REFER TO TECHNICAL SPECIFICATION FOR ADDITIONAL INFORMATION.
6. ANCHOR DOWELS/ACHORAGE DEVICE SHALL NOT BE EMBEDDED WITHIN STRUCTURES CONCRETE.

SIGNED PROFESSIONAL ENGINEER
No. S 3220
EXP. 09/30/17
STRUCTURAL
STATE OF CALIFORNIA
11/17/16

0" 1"
VERIFY SCALES
BAR IS ONE INCH
LONG ON FULL
SIZE DRAWING.
IF NOT ONE INCH
LONG ON THIS
DRAWING, ADJUST
SCALES ACCORDINGLY

TJC and ASSOCIATES, INC.

RMC Water and Environment

REV	DATE	BY	APVD	DESCRIPTION

DESIGNED	RKT
DRAWN	ADM
CHECKED	DMY

SUBMITTED: MARK TAKEMOTO, RMC PROJ ENGR, CE-64369
APPROVED: STEVE CLARY, RMC ENGR, CE-30318

SAUSALITO · MARIN CITY SANITARY DISTRICT

TREATMENT AND WET WEATHER FLOW UPGRADE

HEADWORKS/EQ BASIN
SECTIONS G & H

DWG NO	S100-9
SHEET NO	105 OF 226
PROJ NO	055-006
DATE	NOVEMBER 2016

FILENAME: 0055-006-S100-09 11-17-16 05:04pm bee || XREFS: X-SMCSD-TBLK | S-HEADWORKS-SECT | RKT California | RKT_SIG |<<--
Last Saved By: bee 11-17-16 12:37pm
XREFS: X-SMCSD-TBLK, S-HEADWORKS-SECT, RKT California, RKT_SIG bee 11/17/16 17:04 W:\TJCAA - 2008 Projects\108049 - RMC, SMCSD Headworks\108049 - Stru\ 0055-006-S100-09

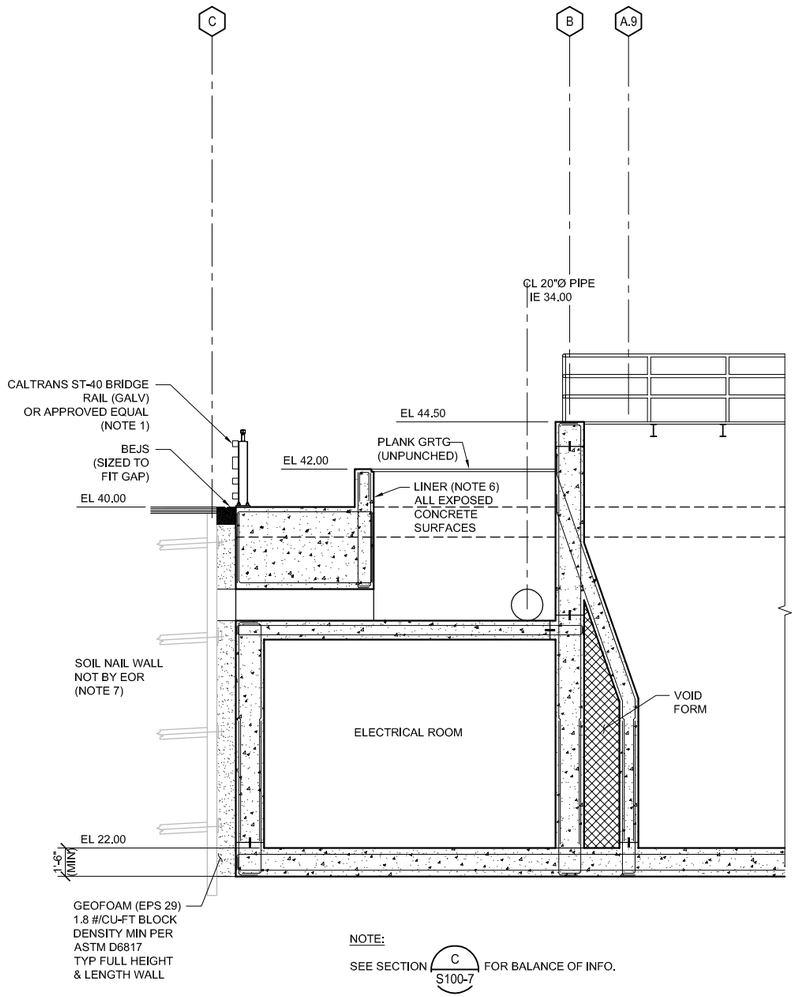

NOTE:

SEE SECTION C/S100-7 FOR BALANCE OF INFO.

SECTION J

SCALE: 1/4"=1'-0" S100-2,3&4

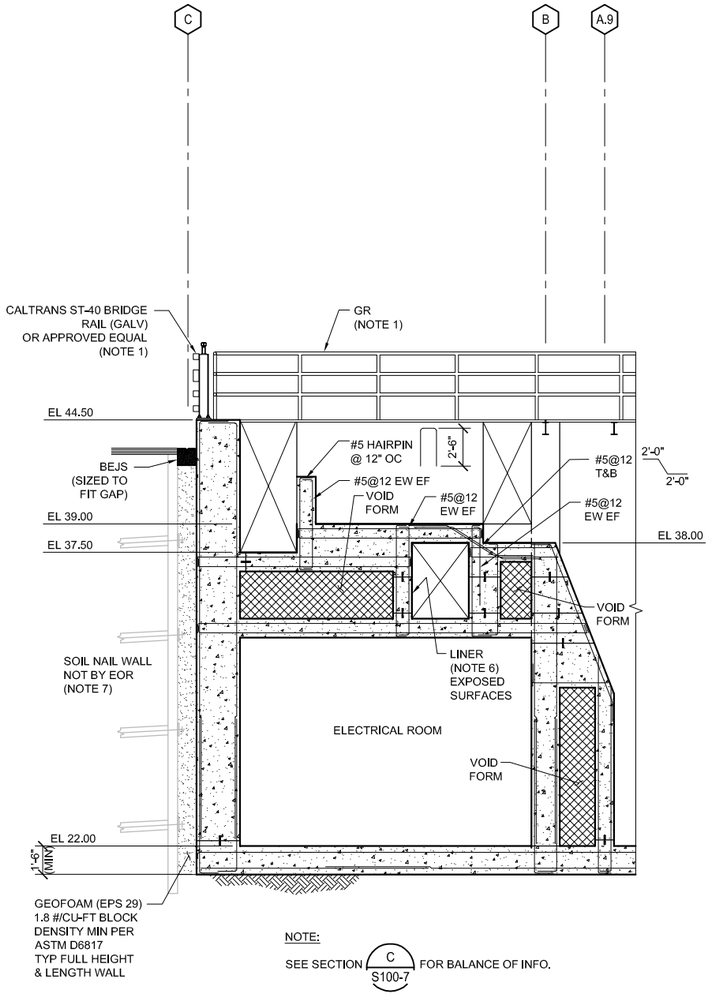

NOTE:

SEE SECTION C/S100-7 FOR BALANCE OF INFO.

SECTION K

SCALE: 1/4"=1'-0" S100-2,3&4

NOTES:

1. GUARDRAIL AND BRIDGE RAIL ARE DEFERRED SUBMITTALS AND ARE THE RESPONSIBILITY OF THE CONTRACTOR. DEFERRED SUBMITTAL ITEMS ARE NOT DESIGNED BY THE ENGINEER OF RECORD, REFER TO STRUCTURAL NOTES, SHEET GS-1 AND PROJECT SPECIFICATIONS FOR ADDITIONAL INFORMATION.
2. COORDINATE LOCATION OF SLIDE GATES WITH MECHANICAL.
3. ALL CORNERS AND INTERSECTIONS SHALL HAVE "ADDED" WALL REINFORCEMENT AS SHOWN ON STANDARD DETAILS 3001 & 3002.
4. SEE ARCHITECTURAL DRAWINGS FOR EXTENT OF TEXTURED CONCRETE WALL AREAS. COORDINATE WALL REINFORCEMENT WITH STANDARD DETAIL 03040 TO ENSURE PROPER CONCRETE COVER.
5. GRADE ELEVATIONS ARE FOR REFERENCE ONLY. SEE CIVIL DRAWINGS FOR FINISHED ELEVATIONS.
6. APPLY PVC LINING SYSTEM AS INDICATED. REFER TO TECHNICAL SPECIFICATION FOR ADDITIONAL INFORMATION.
7. ANCHOR DOWELS/ACHORAGE DEVICE SHALL NOT BE EMBEDDED WITHIN STRUCTURES CONCRETE.

REGISTERED PROFESSIONAL ENGINEER
No. S 5320
EXP. 09/30/17
STRUCTURAL
STATE OF CALIFORNIA
11/17/16

0" 1"
VERIFY SCALES
BAR IS ONE INCH LONG ON FULL SIZE DRAWING. IF NOT ONE INCH LONG ON THIS DRAWING, ADJUST SCALES ACCORDINGLY

TJC

RMC
Water and Environment

REV	DATE	BY	APVD	DESCRIPTION
△				
△				
△				
△				
△				

DESIGNED	RKT
DRAWN	ADM
CHECKED	DMY

SUBMITTED: MARK TAKEMOTO
RMC PROJ ENGR CE-64369

APPROVED: STEVE CLARY
RMC ENGR CE-30318

SAUSALITO · MARIN CITY SANITARY DISTRICT

TREATMENT AND WET WEATHER FLOW UPGRADE

HEADWORKS/EQ BASIN
SECTIONS J & K

DWG NO	S100-10
SHEET NO	106 OF 226
PROJ NO	055-006
DATE	NOVEMBER 2016

FILENAME: 0055-006-S100-10 11-17-16 05:03pm bee || XREFS: | X-SMCSD-TBLK | S-HEADWORKS-SECT | RKT California | RKT_SIG |<<--

Last Saved By: bee 11-17-16 12:54pm

W:\TJCA - 2008 Projects\108049 - RMC, SMCSD Headworks\108049 - Stru\ 0055-006-S100-10 11/17/16 17:02 bee XREFS: X-SMCSD-TBLK, S-HEADWORKS-SECT, RKT California, RKT_SIG

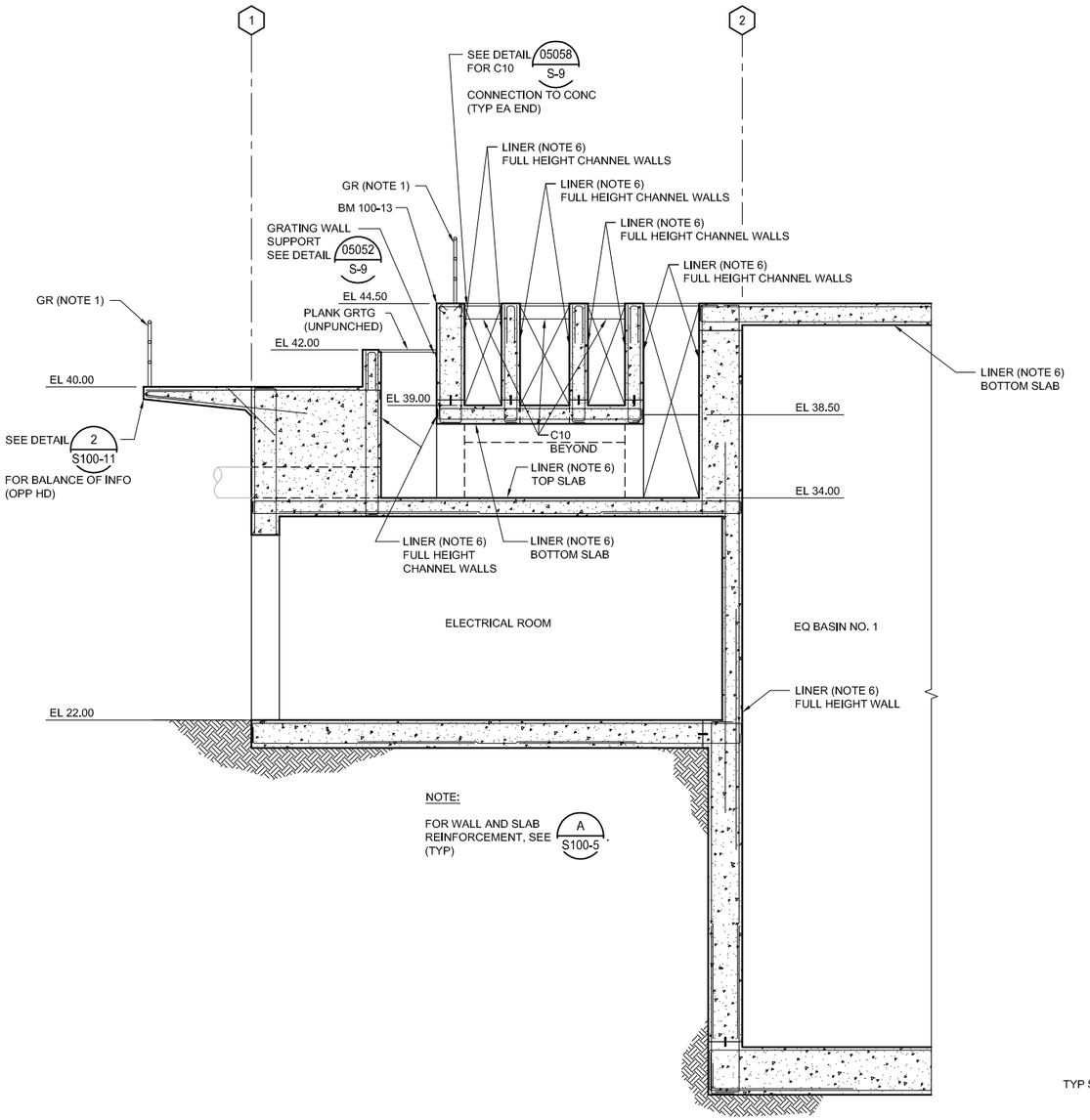

NOTE:

FOR WALL AND SLAB REINFORCEMENT, SEE A S100-5 (TYP)

SECTION L
SCALE: 1/4"=1'-0" S100-2,3&4

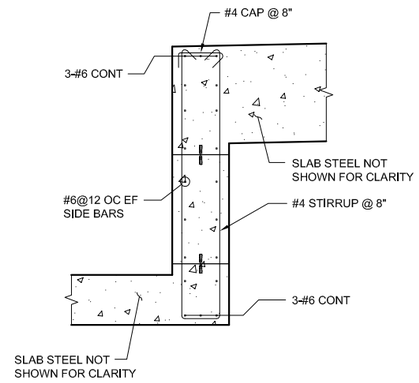

DETAIL 1
SCALE: 1/2"=1'-0" VAR

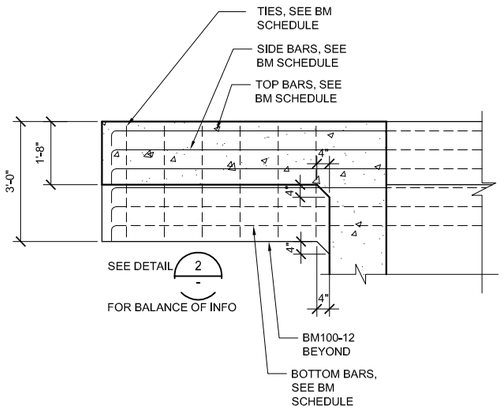

DETAIL M
SCALE: 1/2"=1'-0" VAR

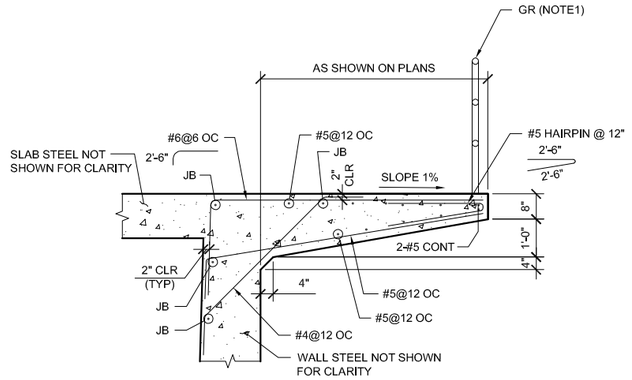

NOTE:

AT CONTRACTOR'S OPTION MAY SUBSTITUTE FORM SAVERS IN LIEU OF DOWELS.

DETAIL 2
SCALE: 1/2"=1'-0" VAR

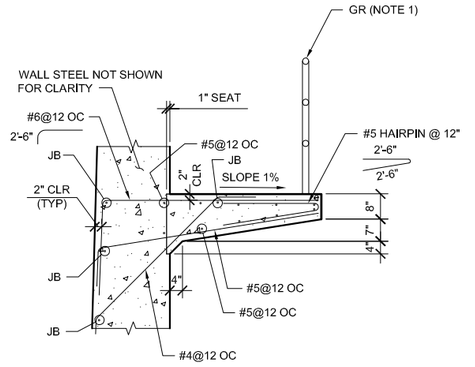

NOTE:

AT CONTRACTOR'S OPTION MAY SUBSTITUTE FORM SAVERS IN LIEU OF DOWELS.

DETAIL 3
SCALE: 1/2"=1'-0" VAR

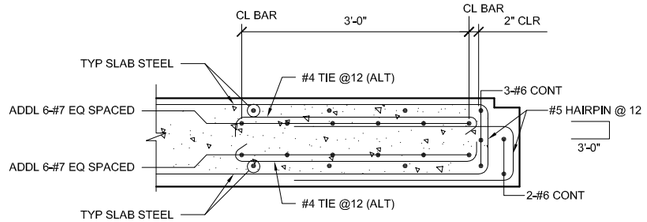

DETAIL 4
SCALE: 1/2"=1'-0" VAR

NOTES:

1. GUARDRAIL AND BRIDGE RAIL ARE DEFERRED SUBMITTALS AND ARE THE RESPONSIBILITY OF THE CONTRACTOR. DEFERRED SUBMITTAL ITEMS ARE NOT DESIGNED BY THE ENGINEER OF RECORD, REFER TO STRUCTURAL NOTES, SHEET GS-1 AND PROJECT SPECIFICATIONS FOR ADDITIONAL INFORMATION.
2. COORDINATE LOCATION OF SLIDE GATES WITH MECHANICAL.
3. ALL CORNERS AND INTERSECTIONS SHALL HAVE "ADDED" WALL REINFORCEMENT AS SHOWN ON STANDARD DETAILS 3001 & 3002.
4. SEE ARCHITECTURAL DRAWINGS FOR EXTENT OF TEXTURED CONCRETE WALL AREAS. COORDINATE WALL REINFORCEMENT WITH STANDARD DETAIL 03040 TO ENSURE PROPER CONCRETE COVER.
5. GRADE ELEVATIONS ARE FOR REFERENCE ONLY. SEE CIVIL DRAWINGS FOR FINISHED ELEVATIONS.
6. APPLY PVC LINING SYSTEM AS INDICATED. REFER TO TECHNICAL SPECIFICATION FOR ADDITIONAL INFORMATION.

REGISTERED PROFESSIONAL ENGINEER — No. S 5320 — EXP. 09/30/17 — STRUCTURAL — STATE OF CALIFORNIA
11/17/16

0" 1" VERIFY SCALES BAR IS ONE INCH LONG ON FULL SIZE DRAWING. IF NOT ONE INCH LONG ON THIS DRAWING, ADJUST SCALES ACCORDINGLY

TJC and ASSOCIATES, INC.

RMC Water and Environment

REV	DATE	BY	APVD	DESCRIPTION
1				
2				
3				
4				
5				

DESIGNED	RKT
DRAWN	ADM
CHECKED	DMY

SUBMITTED: MARK TAKEMOTO, RMC PROJ ENGR, CE-64369
APPROVED: STEVE CLARY, RMC ENGR, CE-30318

SAUSALITO · MARIN CITY SANITARY DISTRICT

TREATMENT AND WET WEATHER FLOW UPGRADE

HEADWORKS/EQ BASIN SECTIONS & DETAILS

DWG NO S100-11
SHEET NO 107 OF 226
PROJ NO 055-006
DATE NOVEMBER 2016

FILENAME: 0055-006-S100-11 11-17-16 05:02pm bee || XREFS: X-SMCSD-TBLK | S-HEADWORKS-SECT | RKT California | RKT_SIG <<--

W:\TJCAA - 2008 Projects\108049 - RMC, SMCSD Headworks\108049 - Stru\ 0055-006-S100-11 11/17/16 17:01 bee XREFS: X-SMCSD-TBLK, S-HEADWORKS-SECT, RKT California, RKT_SIG

Last Saved By: bee 11-17-16 01:01pm

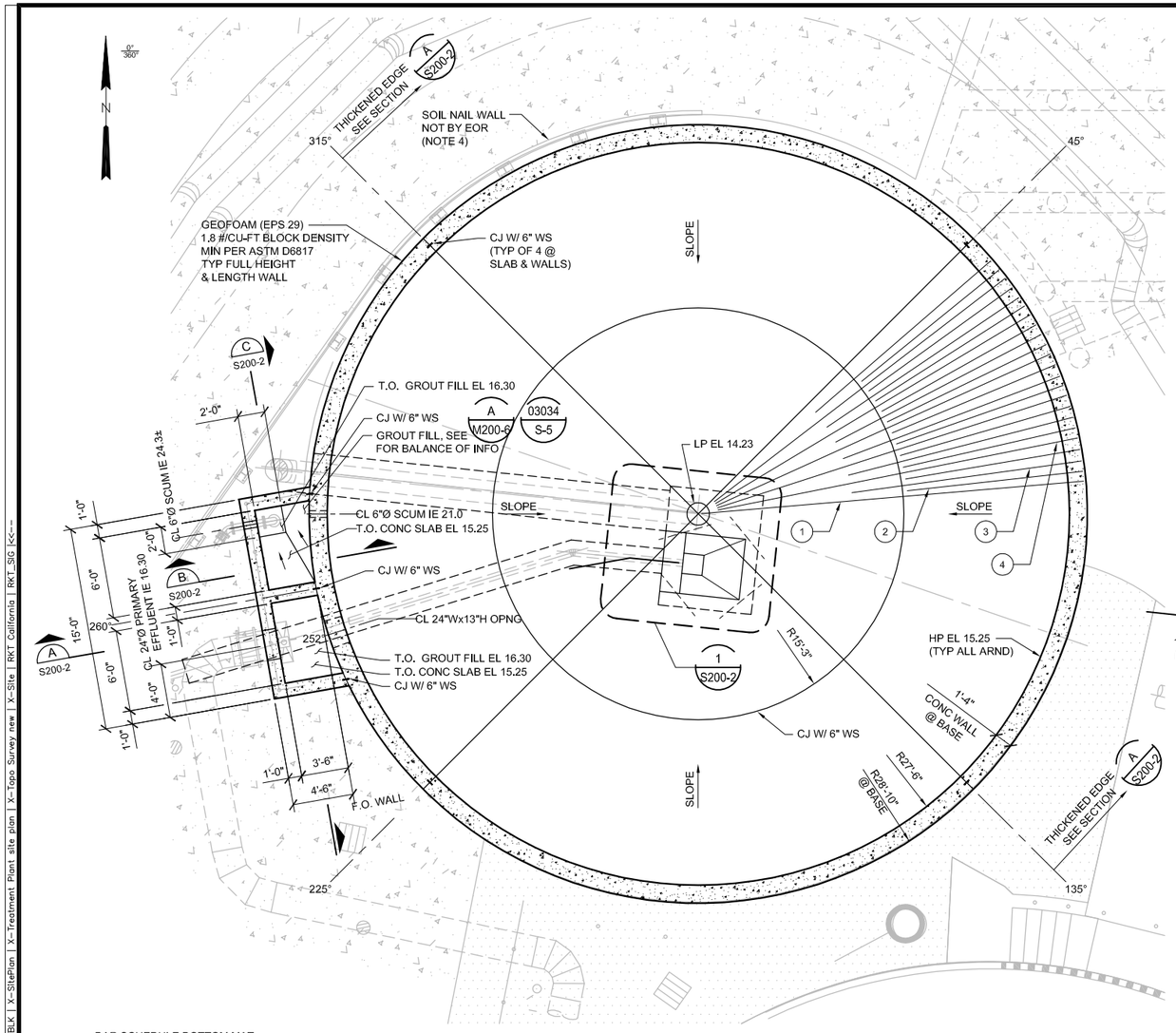

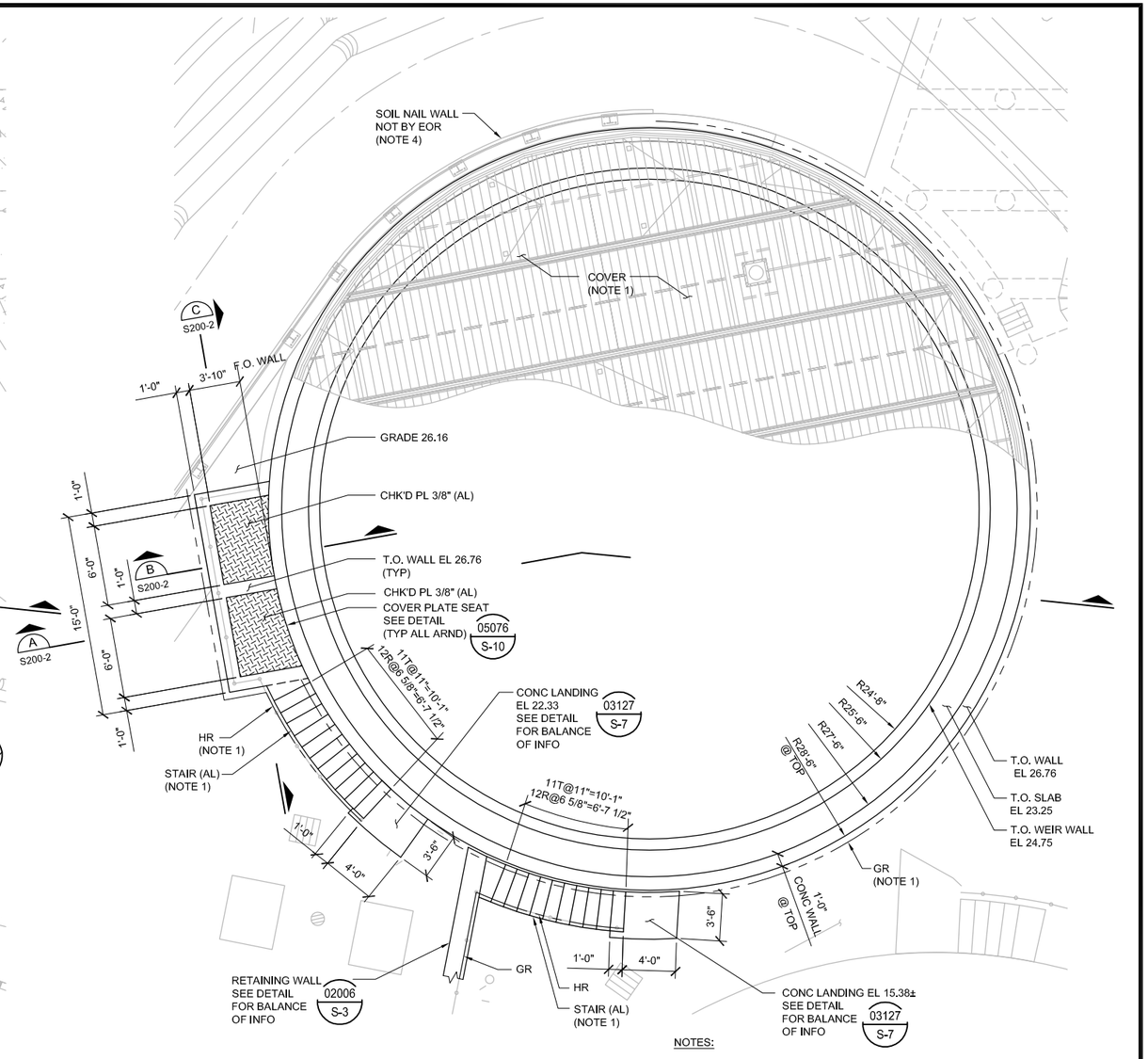

BAR SCHEDULE BOTTOM MAT

MARK	SIZE	COUNT	LENGTH	COMMENT
1	#6	16	30'-7"	NOTES 1 & 2
2	#8	174	15'-2"	NOTES 1 & 2
3	#6	87	19'-4"	NOTES 1 & 2
4	#6	71	29'-4"	NOTES 1 & 2

BAR SCHEDULE TOP MAT

MARK	SIZE	COUNT	LENGTH	COMMENT
1	#6	16	30'-7"	NOTES 1 & 2
2	#6	174	15'-2"	NOTES 1 & 2
3	#6	87	19'-4"	NOTES 1 & 2
4	#6	71	29'-4"	NOTES 1 & 2

BAR SCHEDULE NOTES:

1. LENGTHS SHOWN ARE APPROXIMATE, CONTRACTOR IS RESPONSIBLE FOR VERIFYING BAR LENGTHS PRIOR TO FABRICATION AND DELIVERY TO PROJECT SITE.
2. BARS SHALL BE EQUALLY SPACED AROUND PERIMETER OF THE TANK IN THE PATTERN DETAILED ON THE PLAN.
3. REFER TO STANDARD DETAIL 03003 S-4 FOR REQUIREMENTS AT CONSTRUCTION JOINT.
4. TRIM BARS, AS REQUIRED, AT SLUDGE HOPPER AND PRIMARY INFLUENT PIPE PENETRATION.

PRIMARY CLARIFIER NO.2 FOUNDATION PLAN

SCALE: 3/16"=1'-0"

NOTES:

1. CLARIFIER COVER, METAL STAIR, HANDRAIL AND GUARD RAIL ARE DEFERRED SUBMITTAL ITEMS AND ARE THE RESPONSIBILITY OF THE CONTRACTOR. DEFERRED SUBMITTAL ITEMS HAVE NOT BEEN DESIGNED BY THE ENGINEER OF RECORD, REFER TO CONTRACT DOCUMENTS FOR ADDITIONAL INFORMATION.
2. APPLY PVC LINING SYSTEM TO OUTER WALL OF EFFLUENT TROUGH, EFFLUENT AND SCUM BOX, AND ANY EXPOSED CONCRETE ABOVE WATER LINE. REFER TO TECHNICAL SPECIFICATION FOR ADDITIONAL INFORMATION.
3. APPLY COATING SYSTEM (P100 OR APPROVED EQUAL) AS INDICATED. REFER TO TECHNICAL SPECIFICATIONS FOR ADDITIONAL INFORMATION.
4. ANCHOR DOWELS/ANCHORAGE DEVICE SHALL NOT BE EMBEDDED WITHIN THE CONCRETE STRUCTURE.

PRIMARY CLARIFIER NO.2 TOP PLAN

SCALE: 3/16"=1'-0"

STATE OF CALIFORNIA — STRUCTURAL — No. S 5220 — EXP. 09/30/17 — PROFESSIONAL ENGINEER
11/17/16

0" 1" — VERIFY SCALES — BAR IS ONE INCH LONG ON FULL SIZE DRAWING. IF NOT ONE INCH LONG ON THIS DRAWING, ADJUST SCALES ACCORDINGLY

TJC and ASSOCIATES

RMC Water and Environment

REV	DATE	BY	APVD	DESCRIPTION

DESIGNED	RKT
DRAWN	ADM
CHECKED	DMY

SUBMITTED: MARK TAKEMOTO — RMC PROJ ENGR — CE-64369
APPROVED: STEVE CLARY — RMC ENGR — CE-30318

SAUSALITO • MARIN CITY SANITARY DISTRICT

TREATMENT AND WET WEATHER FLOW UPGRADE

PRIMARY CLARIFIER NO.2
FOUNDATION AND TOP PLANS

DWG NO	S200-1
SHEET NO	108 OF 226
PROJ NO	055-006
DATE	NOVEMBER 2016

FILENAME: 0055-006-S200-01 11-17-16 05:01pm bee || XREFS: | S-TANK-PLAN | X-SMCSD-TBLK | X-SitePlan | X-Treatment Plant site plan | X-Topo Survey new | X-Site | RKT California | RKT_SIG |<<--

Last Saved By: bee 11-17-16 03:11pm

W:\CAD - 2008 Projects\108049 - RMC, SMCSD Headworks\108049 - Stru\ 0055-006-S200-01 11/17/16 17:01 bee XREFS: S-TANK-PLAN, X-SMCSD-TBLK, X-SitePlan, X-Treatment Plant site plan, X-Topo Survey new, X-Site, RKT California, RKT_SIG

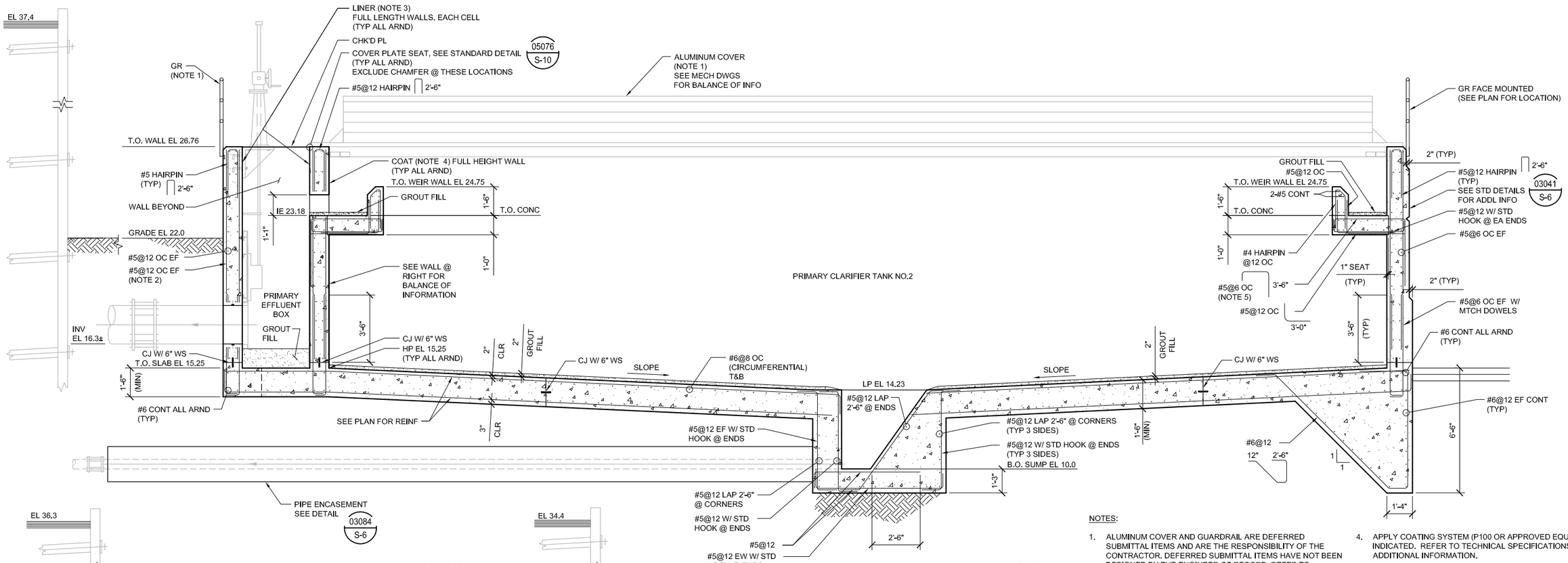

NOTES:

1. ALUMINUM COVER AND GUARDRAIL ARE DEFERRED SUBMITTAL ITEMS AND ARE THE RESPONSIBILITY OF THE CONTRACTOR. DEFERRED SUBMITTAL ITEMS HAVE NOT BEEN DESIGNED BY THE ENGINEER OF RECORD, REFER TO CONTRACT DOCUMENTS FOR ADDITIONAL INFORMATION.
2. JOG IN BARS ARE FOR PICTORIAL REPRESENTATION ONLY. BARS TO BE LAPPED SHALL BE STRAIGHT.
3. APPLY PVC LINING SYSTEM TO OUTER WALL OF EFFLUENT TROUGH, EFFLUENT AND SCUM BOX, AND ANY EXPOSED CONCRETE ABOVE WATER LINE. REFER TO TECHNICAL SPECIFICATIONS FOR ADDITIONAL INFORMATION.
4. APPLY COATING SYSTEM (P100 OR APPROVED EQUAL) AS INDICATED. REFER TO TECHNICAL SPECIFICATIONS FOR ADDITIONAL INFORMATION.
5. AT CONTRACTOR'S OPTION MAY SUBSTITUTE FORM SAVERS IN-LIEU OF DOWELS.
6. CONTRACTOR SHALL VERIFY MINIMUM DIMENSION REQUIRED TO SATISFY ANCHORAGE EDGE DISTANCES PRIOR TO LOCATING SLUDGE HOPPER.

KEVIN R. TAKEMOTO No. S 5220 EXP. 09/30/17 STRUCTURAL STATE OF CALIFORNIA
11/17/16

0" 1" VERIFY SCALES
BAR IS ONE INCH
LONG ON FULL
SIZE DRAWING.
IF NOT ONE INCH
LONG ON THIS
DRAWING, ADJUST
SCALES ACCORDINGLY

TJC and ASSOCIATES, INC.

RMC Water and Environment

REV	DATE	BY	APVD	DESCRIPTION

DESIGNED	RKT
DRAWN	ADM
CHECKED	DMY

SUBMITTED: MARK TAKEMOTO, RMC PROJ ENGR, CE-64369

APPROVED: STEVE CLARY, RMC ENGR, CE-30318

SAUSALITO · MARIN CITY SANITARY DISTRICT

TREATMENT AND WET WEATHER FLOW UPGRADE

PRIMARY CLARIFIER NO. 2 SECTIONS AND DETAIL

DWG NO	S200-2
SHEET NO	109 OF 226
PROJ NO	055-006
DATE	NOVEMBER 2016

FILENAME: 0055-006-S200-02 11-17-16 05:00pm bee || XREFS:| X-SMCSD-TBLK | S-TANK-SECT | S-TANK-PLAN | RKT California | RKT_SIG |<<--

Last Saved By: bee 11-17-16 03:53pm

W:\TJCAA - 2008 Projects\108049 - RMC, SMCSD Headworks\108049 - Stru\ 0055-006-S200-02 11/17/16 17:00 bee XREFS: X-SMCSD-TBLK, S-TANK-SECT, S-TANK-PLAN, RKT California, RKT_SIG

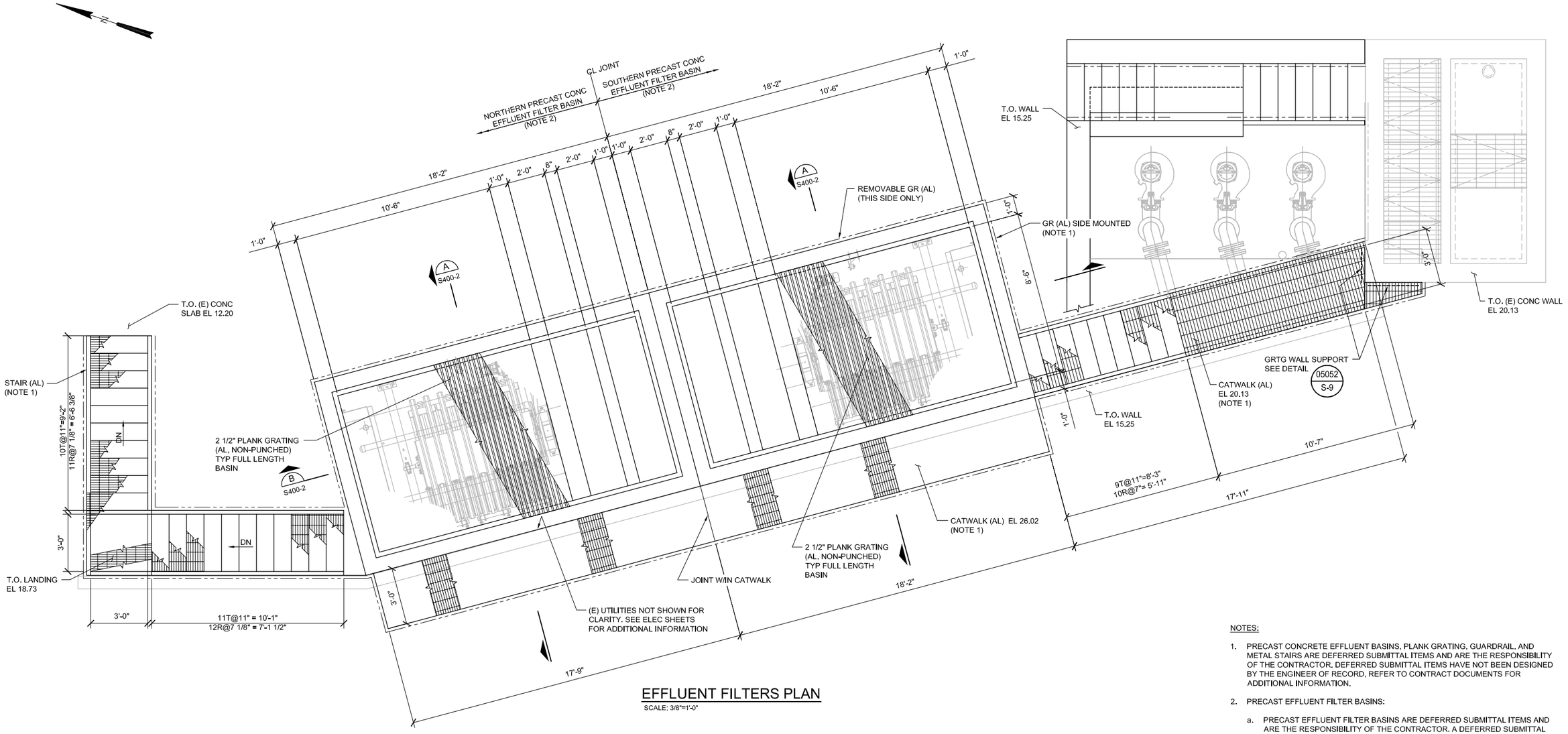

EFFLUENT FILTERS PLAN

SCALE: 3/8"=1'-0"

NOTES:

1. PRECAST CONCRETE EFFLUENT BASINS, PLANK GRATING, GUARDRAIL, AND METAL STAIRS ARE DEFERRED SUBMITTAL ITEMS AND ARE THE RESPONSIBILITY OF THE CONTRACTOR. DEFERRED SUBMITTAL ITEMS HAVE NOT BEEN DESIGNED BY THE ENGINEER OF RECORD, REFER TO CONTRACT DOCUMENTS FOR ADDITIONAL INFORMATION.
2. PRECAST EFFLUENT FILTER BASINS:
   a. PRECAST EFFLUENT FILTER BASINS ARE DEFERRED SUBMITTAL ITEMS AND ARE THE RESPONSIBILITY OF THE CONTRACTOR. A DEFERRED SUBMITTAL ITEM HAS NOT BEEN DESIGNED BY THE ENGINEER OF RECORD, REFER TO CONTRACT DOCUMENTS FOR ADDITIONAL INFORMATION.
   b. UNLESS OTHERWISE NOTED, PRECAST EFFLUENT FILTER BASINS SHALL BE STAMPED AND SIGNED BY A PROFESSIONAL CIVIL OR STRUCTURAL ENGINEER REGISTERED IN THE STATE OF CALIFORNIA.
   c. PRECAST EFFLUENT FILTER BASINS WHICH ARE DAMAGED DURING SHIPMENT OR INSTALLATION, IN THE OPINION OF THE ENGINEER, WILL BE REJECTED. IT SHALL BE THE RESPONSIBILITY OF THE CONTRACTOR TO REPLACE DAMAGED ELEMENTS AT HIS/HER EXPENSE.
   d. APPROPRIATE SIZING AND LOCATION OF LIFTING DEVICES SHALL BE THE RESPONSIBILITY OF THE FABRICATOR.
   e. CONTRACTOR SHALL PATCH ALL LIFTING DEVICE HOLES IN ACCORDANCE WITH PROJECT SPECIFICATIONS, WITH A MINIMUM OF 1-INCH OF COVER OVER HARDWARE TO BE LEFT IN-PLACE BOTH TOP AND BOTTOM.

REGISTERED PROFESSIONAL ENGINEER — No. S 5320 — EXP. 09/30/17 — STRUCTURAL — STATE OF CALIFORNIA — 11/17/16

0" 1" VERIFY SCALES BAR IS ONE INCH LONG ON FULL SIZE DRAWING. IF NOT ONE INCH LONG ON THIS DRAWING, ADJUST SCALES ACCORDINGLY

TJC and ASSOCIATES, INC.

RMC Water and Environment

REV	DATE	BY	APVD	DESCRIPTION
1				
2				
3				
4				
5				

DESIGNED	RKT
DRAWN	ADM
CHECKED	DMY

SUBMITTED: MARK TAKEMOTO, RMC PROJ ENGR, CE-64369

APPROVED: STEVE CLARY, RMC ENGR, CE-30318

SAUSALITO · MARIN CITY SANITARY DISTRICT

TREATMENT AND WET WEATHER FLOW UPGRADE

EFFLUENT FILTERS PLAN

DWG NO	S400-1
SHEET NO	110 OF 226
PROJ NO	055-006
DATE	NOVEMBER 2016

FILENAME: 0055-006-S400-01 11-17-16 04:59pm bee || XREFS:| X-SMCSD-TBLK | S-EFFLNT_FLTRS-PLAN | X-Headworks | S-HEADWORKS-PLAN | X-SitePlan | X-Treatment Plant site plan | X-Topo Survey new | X-Site | RKT California | RKT_SIG |<<--

W:\TJCAA - 2008 Projects\108049 - RMC, SMCSD Headworks\108049 - Stru\ 0055-006-S400-01 11/17/16 16:59 bee XREFS: X-SMCSD-TBLK, S-EFFLNT_FLTRS-PLAN, X-Headworks, S-HEADWORKS-PLAN, X-SitePlan, X-Treatment Plant site plan, X-Topo Survey new, X-Site, RKT California, RKT_SIG

Last Saved By: andria 11-16-16 10:17am

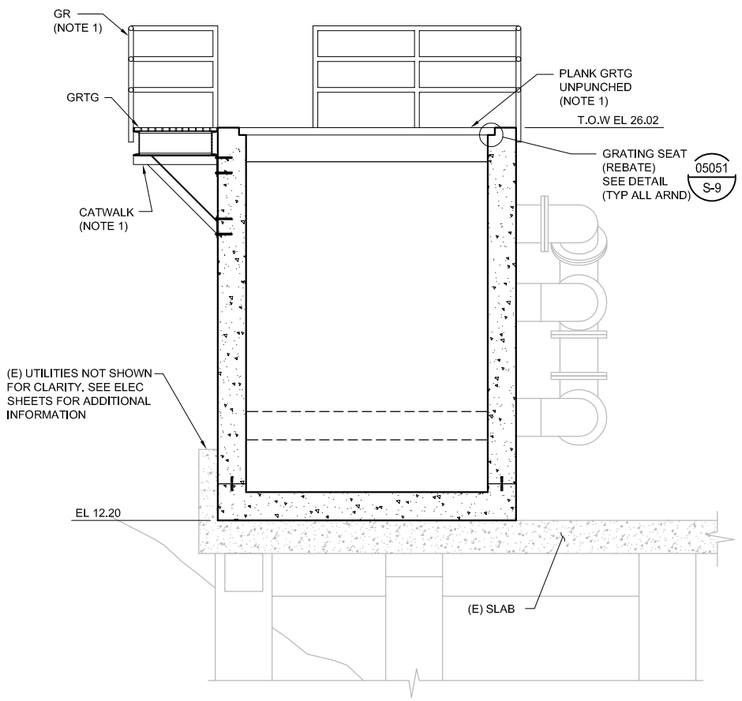

SECTION A
SCALE: 3/8"=1'-0" S400-1

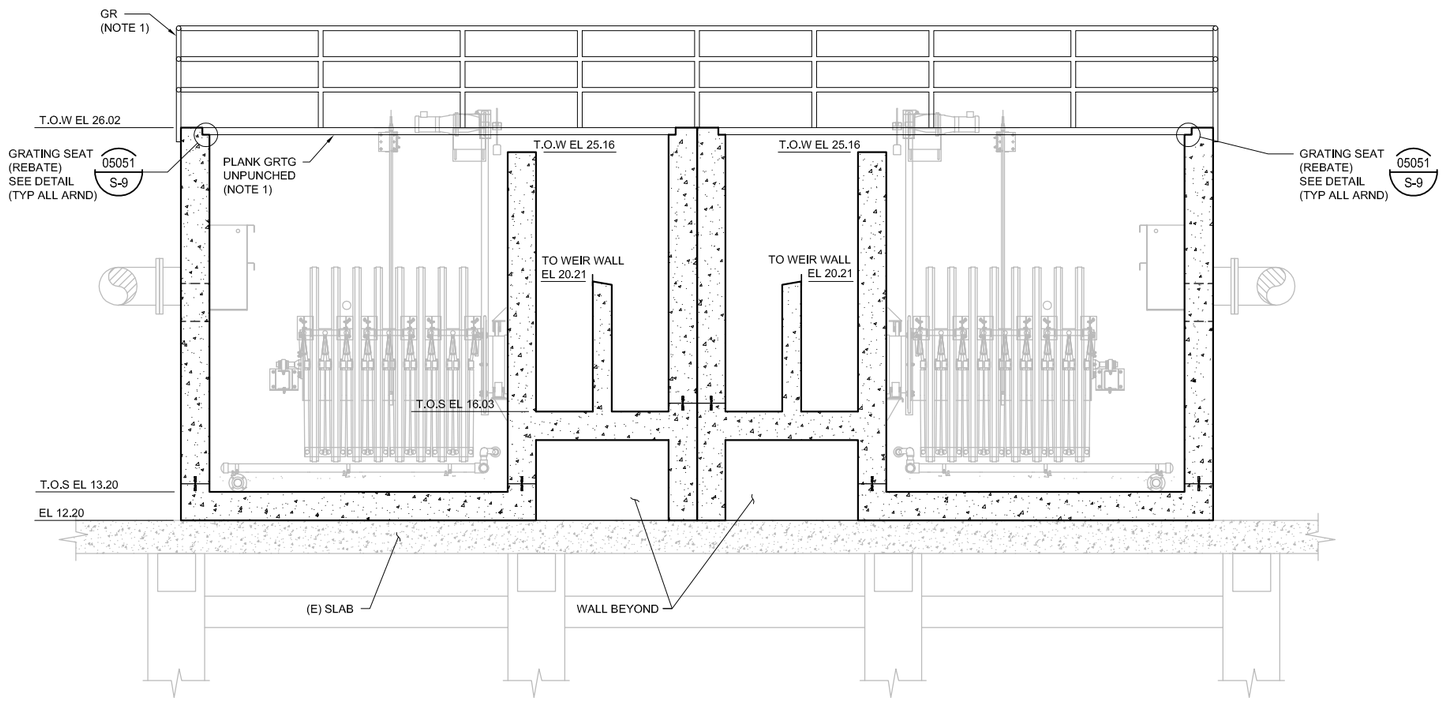

SECTION B
SCALE: 3/8"=1'-0" S400-1

NOTES:

1. PRECAST CONCRETE EFFLUENT BASINS, PLANK GRATING, GUARDRAIL, AND METAL STAIRS ARE DEFERRED SUBMITTAL ITEMS AND ARE THE RESPONSIBILITY OF THE CONTRACTOR. DEFERRED SUBMITTAL ITEMS HAVE NOT BEEN DESIGNED BY THE ENGINEER OF RECORD, REFER TO CONTRACT DOCUMENTS FOR ADDITIONAL INFORMATION.

2. PRECAST EFFLUENT FILTER BASINS:

   a. PRECAST EFFLUENT FILTER BASINS ARE DEFERRED SUBMITTAL ITEMS AND ARE THE RESPONSIBILITY OF THE CONTRACTOR. A DEFERRED SUBMITTAL ITEM HAS NOT BEEN DESIGNED BY THE ENGINEER OF RECORD, REFER TO CONTRACT DOCUMENTS FOR ADDITIONAL INFORMATION.

   b. UNLESS OTHERWISE NOTED, PRECAST EFFLUENT FILTER BASINS SHALL BE STAMPED AND SIGNED BY A PROFESSIONAL CIVIL OR STRUCTURAL ENGINEER REGISTERED IN THE STATE OF CALIFORNIA.

   c. PRECAST EFFLUENT FILTER BASINS WHICH ARE DAMAGED DURING SHIPMENT OR INSTALLATION, IN THE OPINION OF THE ENGINEER, WILL BE REJECTED. IT SHALL BE THE RESPONSIBILITY OF THE CONTRACTOR TO REPLACE DAMAGED ELEMENTS AT HIS/HER EXPENSE.

   d. APPROPRIATE SIZING AND LOCATION OF LIFTING DEVICES SHALL BE THE RESPONSIBILITY OF THE FABRICATOR.

   e. CONTRACTOR SHALL PATCH ALL LIFTING DEVICE HOLES IN ACCORDANCE WITH PROJECT SPECIFICATIONS, WITH A MINIMUM OF 1-INCH OF COVER OVER HARDWARE TO BE LEFT IN-PLACE BOTH TOP AND BOTTOM.

REGISTERED PROFESSIONAL ENGINEER
No. S 5320
EXP. 09/30/17
STRUCTURAL
STATE OF CALIFORNIA
11/17/16

0" 1"
VERIFY SCALES
BAR IS ONE INCH LONG ON FULL SIZE DRAWING. IF NOT ONE INCH LONG ON THIS DRAWING, ADJUST SCALES ACCORDINGLY

TJC

RMC
Water and Environment

REV	DATE	BY	APVD	DESCRIPTION
△				
△				
△				
△				
△				

DESIGNED	RKT
DRAWN	ADM
CHECKED	DMY

SUBMITTED: MARK TAKEMOTO
RMC PROJ ENGR CE-64369

APPROVED: STEVE CLARY
RMC ENGR CE-30318

SAUSALITO · MARIN CITY SANITARY DISTRICT

TREATMENT AND WET WEATHER FLOW UPGRADE

EFFLUENT FILTERS SECTIONS

DWG NO	S400-2
SHEET NO	111 OF 226
PROJ NO	055-006
DATE	NOVEMBER 2016

FILENAME: 0055-006-S400-02 11-17-16 04:58pm bee || XREFS: | X-SMCSD-TBLK | S-EFFLNT_FLTRS-SECT | RKT California | S-EFFLNT_FLTRS-PLAN | X-Headworks | S-HEADWORKS-PLAN | X-SitePlan | X-Site | X-Topo Survey new | RKT_SIG | X-Treatment Plant site plan |<<--

Last Saved By: bee 11-17-16 04:55pm

W:\TJCA - 2008 Projects\108049 - RMC, SMCSD Headworks\108049 - Stru\ 0055-006-S400-02 11/17/16 16:58 bee XREFS: X-SMCSD-TBLK, S-EFFLNT_FLTRS-SECT, RKT California, S-EFFLNT_FLTRS-PLAN, X-Headworks, S-HEADWORKS-PLAN, X-SitePlan, X-Site, X-Topo Survey new, RKT_SIG, X-Treatment Plant site plan

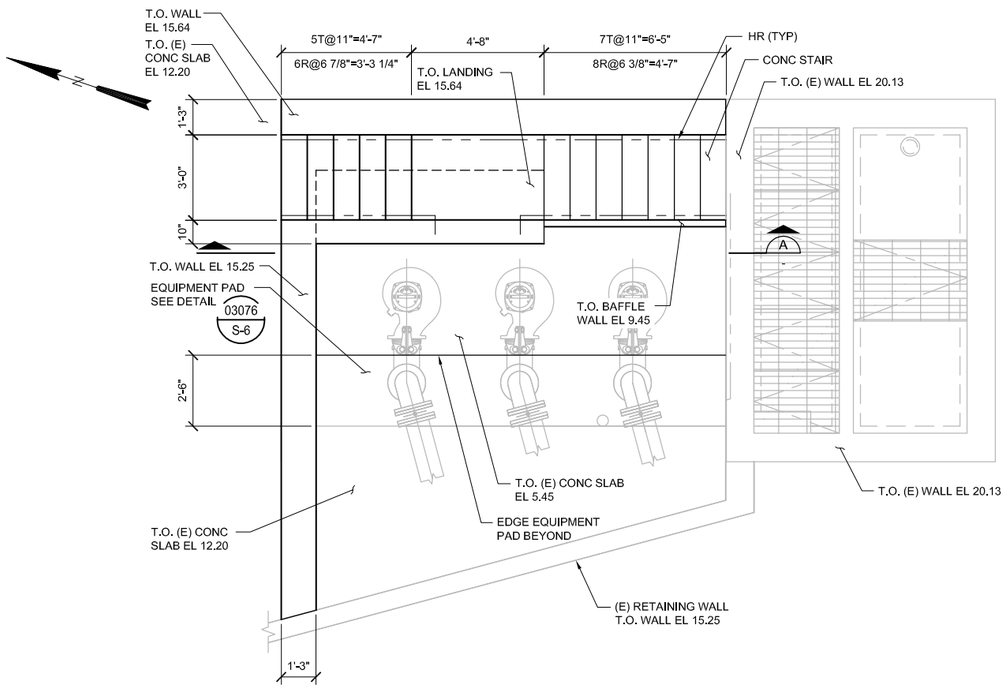

EFFLUENT FILTERS INTERMEDIATE PLAN

SCALE: 3/8"=1'-0"

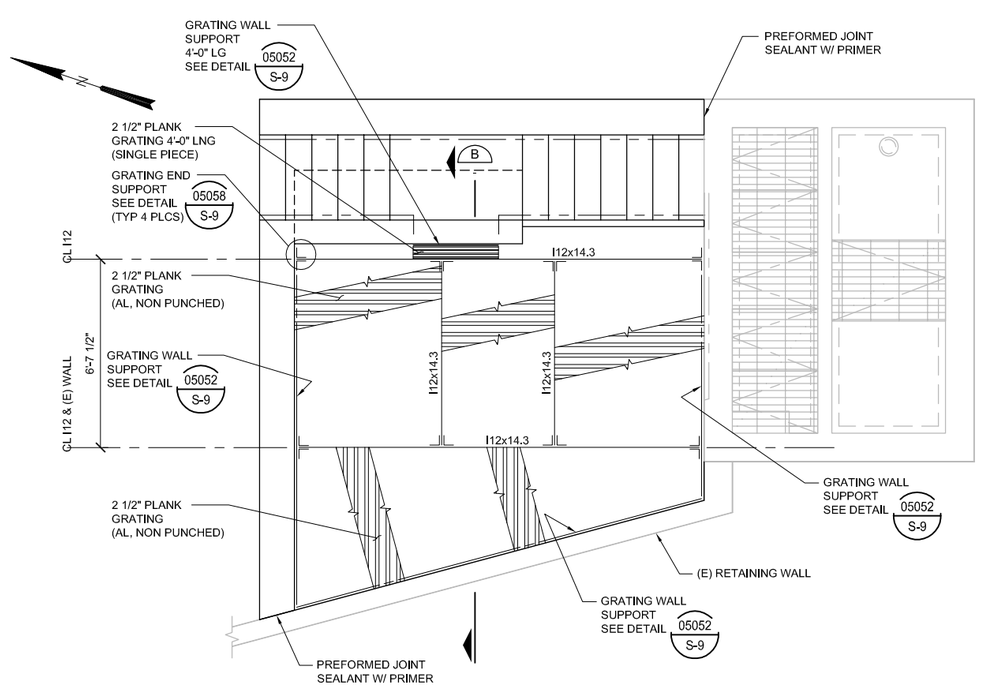

EFFLUENT FILTERS TOP PLAN

SCALE: 3/8"=1'-0"

NOTES:

1. ALL MEMBER SIZES SHOWN ON SHEETS ARE MINIMUM SIZES. ACTUAL SIZES SHALL BE DETERMINED BY THE CONTRACTOR.
2. THE DESIGN OF STAIRS IS A DEFERRED SUBMITTAL ITEM AND IS THE RESPONSIBILITY OF THE CONTRACTOR. THE DEFERRED SUBMITTAL DESIGN SHALL BE SUBMITTED TO THE DESIGN PROFESSIONAL IN RESPONSIBLE CHARGE FOR REVIEW FOR GENERAL CONFORMANCE TO THE STRUCTURAL DESIGN CRITERIA. INSTALLATION OF THE STAIRS SHALL NOT BEGIN UNTIL THE SUBMITTAL HAS BEEN REVIEWED BY THE DESIGN PROFESSIONAL IN RESPONSIBLE CHARGE AND HAS BEEN FOUND TO BE IN GENERAL CONFORMANCE WITH THE DESIGN OF THE PROJECT AND THE SUBMITTAL HAS BEEN DEEMED ACCEPTABLE BY THE OWNER.
3. ALL MATERIALS FOR STAIRS SHALL BE ALUMINUM UON.
4. WIDTH OF STAIR SHOWN ON DRAWINGS IS THE DISTANCE BETWEEN STRINGERS.

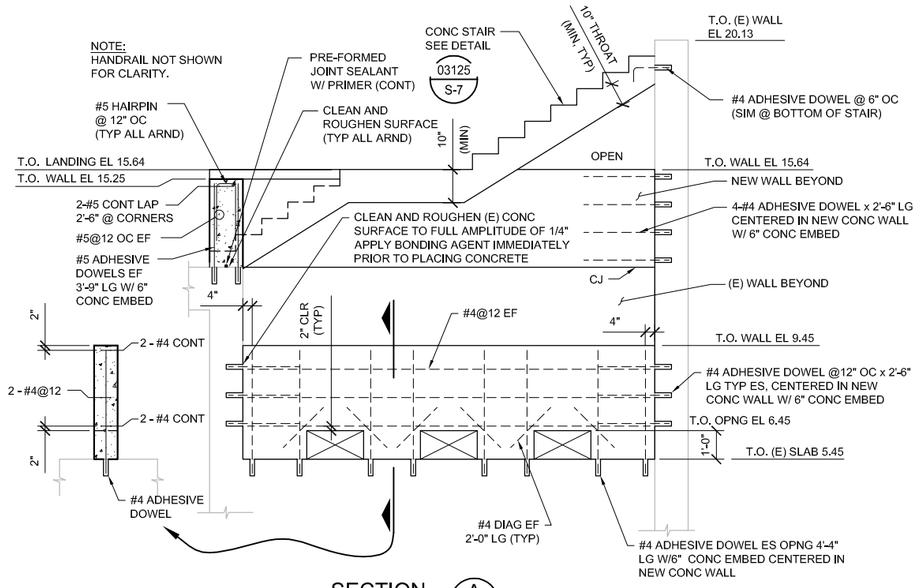

SECTION A

SCALE: 3/8"=1'-0"

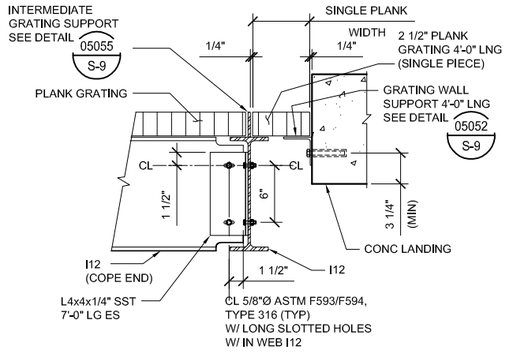

DETAIL A

SCALE: 1 1/2"=1'-0"

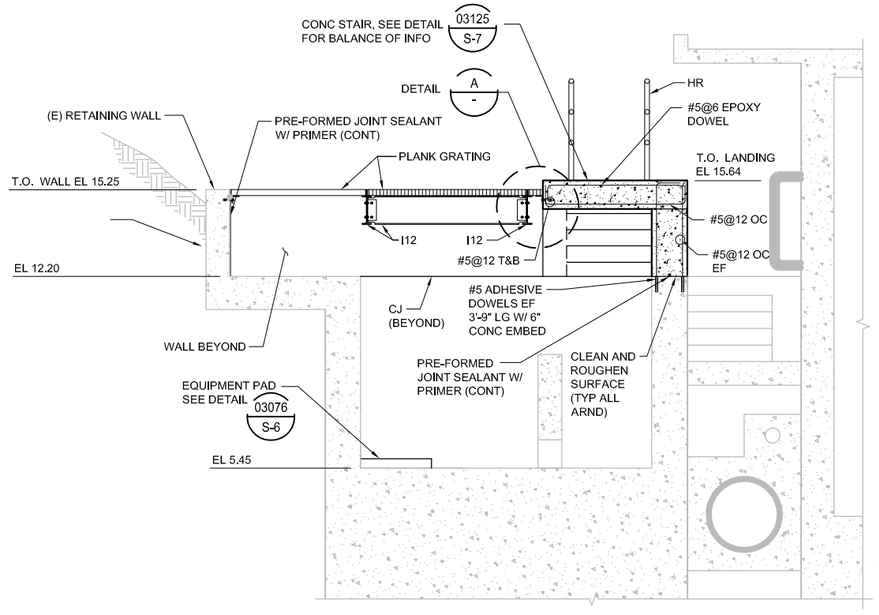

SECTION B

SCALE: 3/8"=1'-0"

FILENAME: 0055-006-S400-03 11-17-16 04:53pm bee | XREFS: | X-SMCSD-TBLK | S-HEADWORKS-PLAN | X-SitePlan | X-Treatment Plant site plan | X-Topo Survey new | X-Site | RKT California | S-EFFLNT_FLTRS-PLAN | X-Headworks | S-EFFLNT_FLTRS-SECT | RKT_SIG |<<--

W:\TJCAA - 2008 Projects\108049 - RMC, SMCSD Headworks\108049 - Stru\ 0055-006-S400-03 11/17/16 16:52 bee XREFS: X-SMCSD-TBLK, S-HEADWORKS-PLAN, X-SitePlan, X-Treatment Plant site plan, X-Topo Survey new, X-Site, RKT California, S-EFFLNT_FLTRS-PLAN, X-Headworks, S-EFFLNT_FLTRS-SECT, RKT_SIG

Last Saved By: andria 11-17-16 04:39pm

KEVIN CHRISTOPHER MURPHY — No. S 5220 — EXP. 09/30/17 — STRUCTURAL — STATE OF CALIFORNIA — PROFESSIONAL ENGINEER

11/17/16

0" 1" VERIFY SCALES BAR IS ONE INCH LONG ON FULL SIZE DRAWING. IF NOT ONE INCH LONG ON THIS DRAWING, ADJUST SCALES ACCORDINGLY

TJC and ASSOCIATES, INC.

RMC Water and Environment

REV	DATE	BY	APVD	DESCRIPTION

DESIGNED	RKT
DRAWN	ADM
CHECKED	DMY

SUBMITTED: MARK TAKEMOTO, RMC PROJ ENGR, CE-64369

APPROVED: STEVE CLARY, RMC ENGR, CE-30318

SAUSALITO · MARIN CITY SANITARY DISTRICT

TREATMENT AND WET WEATHER FLOW UPGRADE

MISCELLANEOUS STAIRS

DWG NO	S400-3
SHEET NO	112 OF 226
PROJ NO	055-006
DATE	NOVEMBER 2016

VENTILATION SYMBOLS

- SUPPLY DUCT (SECTION)
- INTAKE, RETURN, OR EXHAUST DUCT (SECTION)
- WALL REGISTER OR GRILLE (SUPPLY)
- WALL REGISTER OR GRILLE (RETURN AND EXHAUST)
- TURNING VANES
- SOUND ATTENUATED DUCT
- FLEXIBLE CONNECTION

MECHANICAL EQUIPMENT LEGEND

P	PUMP
CP	CENTRIFUGAL PUMP
TP	TURBINE PUMP
PP	PROGRESSIVE CAVITY PUMP
SP	SAMPLE PUMP
V	VALVE
CV	CHECK VALVE
BV	BUTTERFLY VALVE
GV	GATE VALVE
PV	PLUG VALVE
DV	DIAPHRAM VALVE
OV	SOLENOID VALVE
MX	MIXER
ME	PROCESS EQUIPMENT
FE	FLOW ELEMENT (METER)
LE	LEVEL ELEMENT
G	GATE
T	TANK
B	BLOWER
SC	SCREEN
H	HOIST/CRANE
AH	AIR HANDLER
AC	AIR CONDITIONER
EF	EXHAUST FAN
SF	SUPPLY FAN
LCP	LOCAL CONTROL PANEL
MCC	MOTOR CONTOL CENTER
LP	LIGHTING PANEL
UV	ULTRA VIOLET EQUIPMENT

EQUIPMENT NUMBERING CONVENTION

UV-1513-30 EQUIPMENT NUMBER TAG

FLOW STREAM IDENTIFICATION

SEE DWG G-6 FOR PROCESS FLUID SCHEDULE

PIPING SCHEDULE

SEE PIPING SCHEDULE ON DWG G-6.

VALVE SCHEDULE

SEE SPEC SECTION 15200 FOR VALVE SCHEDULE.

PUMP SCHEDULE

SEE INDIVIIDUAL PUMP SPEC SECTIONS FOR PUMP SCHEDULE.

GATE SCHEDULE

SEE SPEC SECTION 15250 FOR GATE SCHEDULE.

GATE SYMBOLS

- SLUICE GATE
- SLIDE GATE
- STOP GATE

REGISTERED PROFESSIONAL ENGINEER MARK W. TAKEMOTO No. 64369 Exp. 06-30-17 CIVIL STATE OF CALIFORNIA

0" 1" VERIFY SCALES BAR IS ONE INCH LONG ON FULL SIZE DRAWING. IF NOT ONE INCH LONG ON THIS DRAWING, ADJUST SCALES ACCORDINGLY

RMC water and environment

REV	DATE	BY	APVD	DESCRIPTION

DESIGNED M. TAKEMOTO
DRAWN S. JUNG
CHECKED M. NAKAMOTO

SUBMITTED: MARK TAKEMOTO, RMC PROJECT ENGINEER CE-64369
APPROVED: STEVE CLARY, RMC ENGINEER CE-30318

SAUSALITO · MARIN CITY SANITARY DISTRICT

TREATMENT AND WET WEATHER FLOW UPGRADE

MECHANICAL LEGEND AND SCHEDULES

DWG NO M-1
SHEET NO 113 OF 226
PROJ NO 055-006
DATE NOVEMBER 2016

FILENAME: 0055-006-M-1 11-11-16 12:10pm CTo || XREFS: X-SMCSD-TBLK | MTakemoto-PE-stamp |<<--

Last Saved By: CTo 11-11-16 11:06am

ADJUSTABLE PIPE SUPPORT

NOTES:
1. HOT-DIP GALVANIZE ALL PARTS AFTER FABRICATION.
2. PAINT ENTIRE PIPE SUPPORT ASSEMBLY SAME AS SUPPORTED PIPE OR PER SPECIFICATIONS AFTER GALVANIZING.
3. PROVIDE 1/4" MIN THICK NEOPRENE RING FOR ELECTRICAL ISOLATION BETWEEN PIPE AND SUPPORT FOR METALLIC PIPE.

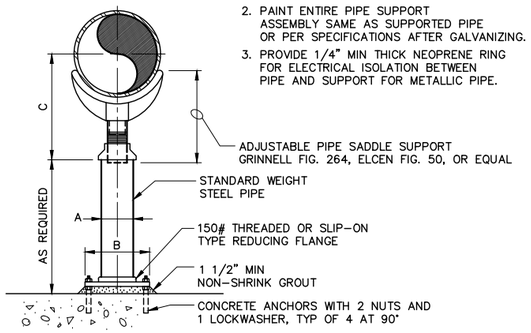

DIMENSIONS IN INCHES				
PIPE SIZE	A	B	C MIN	C MAX
2 1/2	2 7/8	9	8	13
3	2 7/8	9	8 1/4	13 1/4
3 1/2	2 7/8	9	8 1/2	13 1/2
4	3 1/2	9	9 1/4	14
5	3 1/2	9	10	14 3/4
6	3 1/2	9	10 1/2	15 1/4
8	3 1/2	9	11 3/4	16 1/2
10	3 1/2	9	13 1/2	18 1/4
12	3 1/2	9	15	19 3/4
14	4 1/2	11	16 1/4	20 3/4
16	4 1/2	11	17 3/4	22 1/4

NTS

WALL TYPE PIPE SUPPORT — M104

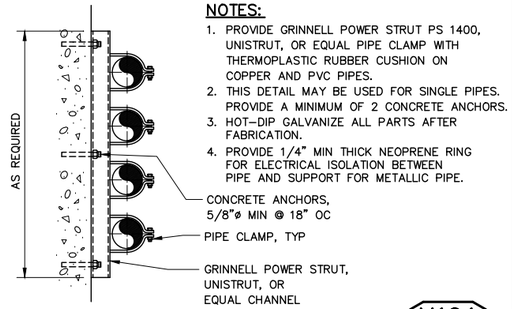

NOTES:
1. PROVIDE GRINNELL POWER STRUT PS 1400, UNISTRUT, OR EQUAL PIPE CLAMP WITH THERMOPLASTIC RUBBER CUSHION ON COPPER AND PVC PIPES.
2. THIS DETAIL MAY BE USED FOR SINGLE PIPES. PROVIDE A MINIMUM OF 2 CONCRETE ANCHORS.
3. HOT-DIP GALVANIZE ALL PARTS AFTER FABRICATION.
4. PROVIDE 1/4" MIN THICK NEOPRENE RING FOR ELECTRICAL ISOLATION BETWEEN PIPE AND SUPPORT FOR METALLIC PIPE.

NTS

PIPE CLAMP DETAIL — M111

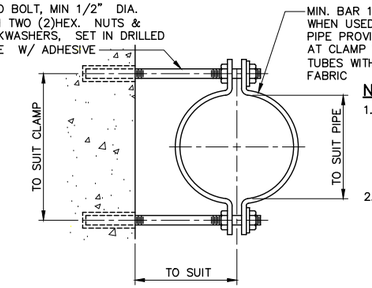

NOTES:
1. GALVANIZE ALL PARTS AFTER FABRICATION. WHERE SUBMERGED PIPE CLAMP, NUTS LOCKWASHERS, ANCHORS AND SHIELDS TO BE TYPE 316 STAINLESS STEEL.
2. IN AREAS DESIGNATED CORROSIVE, HYDRAULIC STRUCTURES AND SUBMERGED CONDITIONS: TYPE 316 STAINLESS STEEL OR FIBERGLASS MATERIALS REQUIRED (SEE SPECIFICATION SECTION 15020).

NTS

PIPE SUPPORT — M114

NOTE:
PROVIDE 1/4" MIN THICK NEOPRENE RING FOR ELECTRICAL ISOLATION BETWEEN PIPE AND SUPPORT FOR METALLIC PIPE.

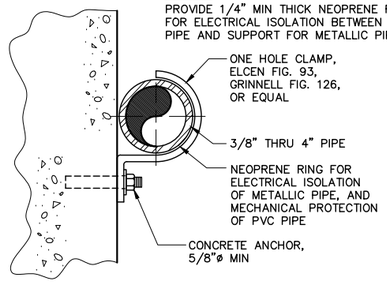

NTS

CORROSION RESISTANT WALL TYPE PIPE SUPPORT — M106

NOTE:
PROVIDE 1/4" MIN THICK NEOPRENE RING FOR ELECTRICAL ISOLATION BETWEEN PIPE AND SUPPORT FOR METALLIC PIPE.

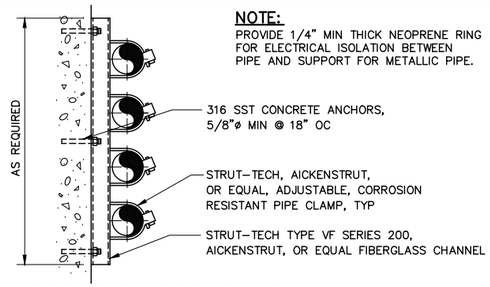

NTS

PIPE SUPPORT — M115

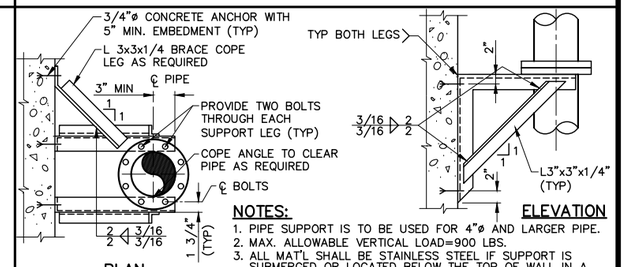

NOTES:
1. PIPE SUPPORT IS TO BE USED FOR 4"ø AND LARGER PIPE.
2. MAX. ALLOWABLE VERTICAL LOAD=900 LBS.
3. ALL MAT'L SHALL BE STAINLESS STEEL IF SUPPORT IS SUBMERGED OR LOCATED BELOW THE TOP OF WALL IN A WATER BEARING STRUCTURE. IN ALL OTHER AREAS, THE MAT'L SHALL BE HOT-DIP GAL. STEEL UNLESS OTHERWISE INDICATED ON THE DRAWINGS.
4. FIELD PAINT GALVANIZED STEEL PER THE SPECIFICATIONS.

NTS

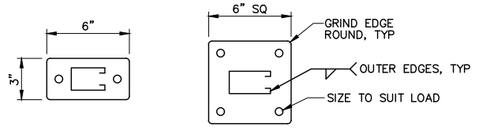

ONE PIPE TWO OR MORE PIPES

NOTES:
1. PROVIDE GRINNELL POWER STRUT PS 1400, UNISTRUT, OR EQUAL PIPE CLAMP WITH THERMOPLASTIC RUBBER CUSHION ON COPPER AND PVC PIPES.
2. MAXIMUM PIPE SIZE IS 4".
3. HOT-DIP GALVANIZE ALL PARTS AFTER FABRICATION.
4. PROVIDE 1/4" MIN THICK NEOPRENE RING FOR ELECTRICAL ISOLATION BETWEEN PIPE AND SUPPORT FOR METALLIC PIPE.

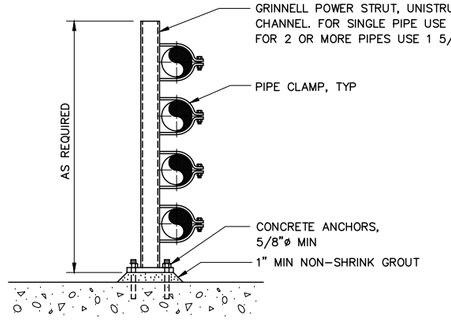

NTS

PIPE STANCHION — M102

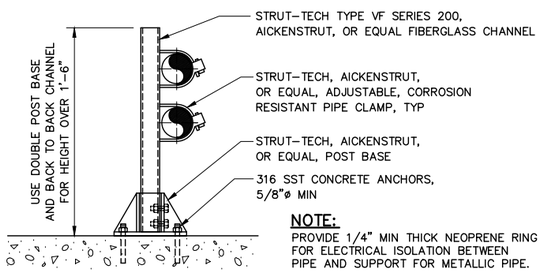

NOTE:
PROVIDE 1/4" MIN THICK NEOPRENE RING FOR ELECTRICAL ISOLATION BETWEEN PIPE AND SUPPORT FOR METALLIC PIPE.

NTS

CORROSION RESISTANT PIPE STANCHION — M108

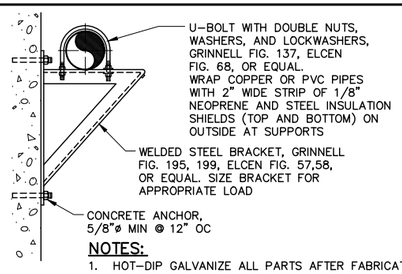

NOTES:
1. HOT-DIP GALVANIZE ALL PARTS AFTER FABRICATION.
2. PROVIDE 1/4" MIN THICK NEOPRENE RING FOR ELECTRICAL ISOLATION BETWEEN PIPE AND SUPPORT FOR METALLIC PIPE.

NTS

PIPE BRACKET — M110

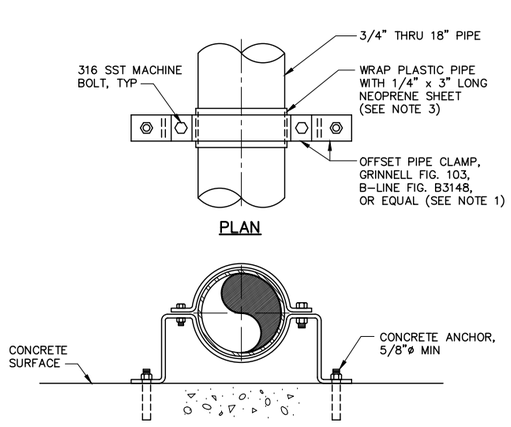

NOTES:
1. HOT-DIP GALVANIZE ALL PARTS AFTER FABRICATION. WHERE PIPE SUPPORT IS SUBMERGED, LOCATED BELOW THE TOP OF WALL IN A WATER BEARING STRUCTURE. PIPE CLAMP SHALL BE 316 STAINLESS STEEL.
2. PROVIDE 1/4" MIN THICK NEOPRENE RING FOR ELECTRICAL ISOLATION BETWEEN PIPE AND SUPPORT FOR METALLIC PIPE.
3. PROVIDE 1/4" MIN THICK NEOPRENE RING FOR ELECTRICAL ISOLATION BETWEEN PIPE AND SUPPORT FOR METALLIC PIPE.

NTS

PIPE SUPPORT — M112

REGISTERED PROFESSIONAL ENGINEER — MARK W. TAKEMOTO — No. 64369 — Exp. 06-30-17 — CIVIL — STATE OF CALIFORNIA

0" 1" — VERIFY SCALES — BAR IS ONE INCH LONG ON FULL SIZE DRAWING. IF NOT ONE INCH LONG ON THIS DRAWING, ADJUST SCALES ACCORDINGLY

RMC water and environment

REV	DATE	BY	APVD	DESCRIPTION

DESIGNED M. TAKEMOTO
DRAWN S. JUNG
CHECKED M. NAKAMOTO

SUBMITTED: MARK TAKEMOTO, RMC PROJECT ENGINEER CE-64369
APPROVED: STEVE CLARY, RMC ENGINEER CE-30318

SAUSALITO · MARIN CITY SANITARY DISTRICT

TREATMENT AND WET WEATHER FLOW UPGRADE

MECHANICAL STANDARD DETAILS - 2

DWG NO M-2
SHEET NO 114 OF 226
PROJ NO 055-006
DATE NOVEMBER 2016

FILENAME: 0055-006-M-2 11-11-16 12:10pm CTo | XREFS: | X-SMCSD-TBLK | MTakemoto-PE-stamp |<<--

Last Saved By: mtakemoto 3-14-16 10:24am

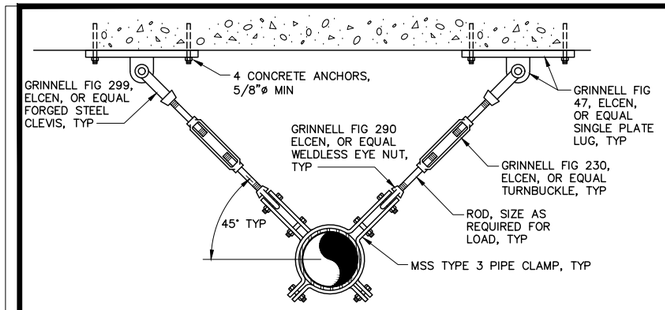

TRANSVERSE ROD BRACE

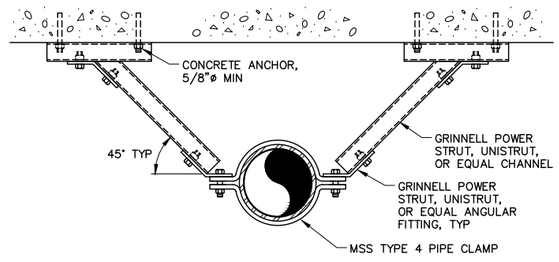

TRANSVERSE CHANNEL BRACE

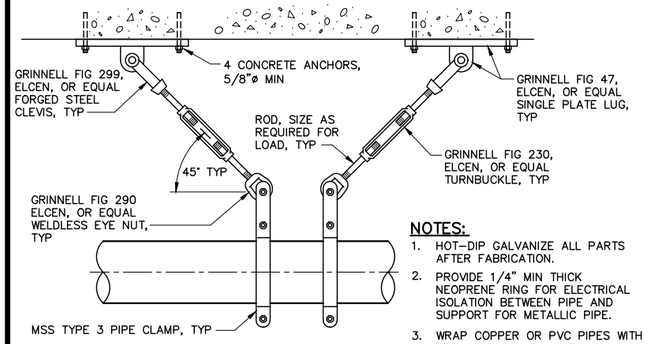

LONGITUDINAL ROD BRACE

NOTES:

1. HOT-DIP GALVANIZE ALL PARTS AFTER FABRICATION.
2. PROVIDE 1/4" MIN THICK NEOPRENE RING FOR ELECTRICAL ISOLATION BETWEEN PIPE AND SUPPORT FOR METALLIC PIPE.
3. WRAP COPPER OR PVC PIPES WITH 2" WIDE STRIP OF 1/8" NEOPRENE.

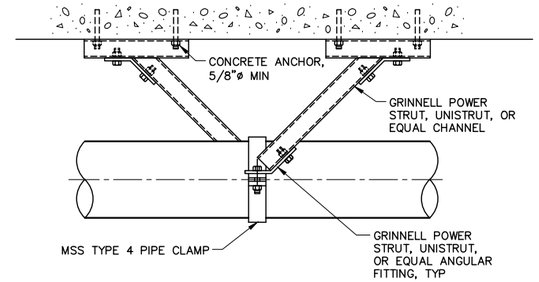

LONGITUDINAL CHANNEL BRACE

SEISMIC BRACING (ELEVATIONS) M116

NTS

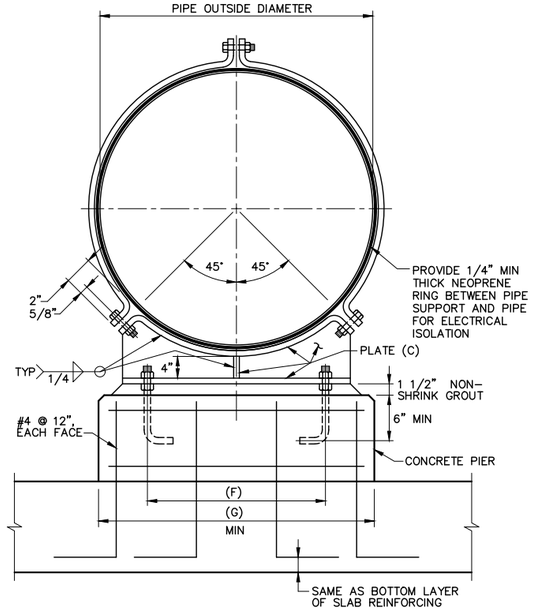

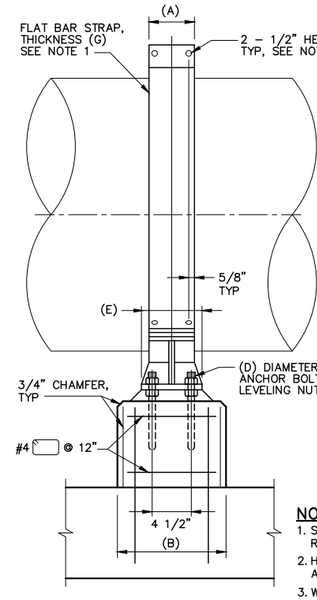

PIPE SUPPORT SCHEDULE								
DIMENSIONS IN INCHES								
PIPE SIZE (NOM)	(A)	(B)	(C)	(D)	(E)	(F)	(G)	
14	4	12	3/8	5/8	6	8	18	
16	4	12	3/8	5/8	6	9	21	
18	4	12	3/8	5/8	6	10	22	
20	5	12	3/8	5/8	6	10	24	
22	5	12	3/8	5/8	6	12	24	
24	5	12	3/8	5/8	6	13	26	
26	5	12	3/8	3/4	6	14	28	
30	5	12	3/8	3/4	6	16	30	
34	5	15	3/8	3/4	6	18	33	
36	6	15	3/8	3/4	6	19	34	

NOTES:

1. STRAP AND RELATED NUTS AND BOLTS ARE REQUIRED EXCEPT WHERE NOTED ON THE DRAWINGS.
2. HOT-DIP GALVANIZE STEEL COMPONENTS AFTER FABRICATION.
3. WHEN ATTACHING TO EXISTING CONCRETE, PROVIDE EQUIVALENT SIZE ADHESIVE ANCHORS.
4. VERIFY PIPE OD PRIOR TO FABRICATION.

PIPE SUPPORT M118

NTS

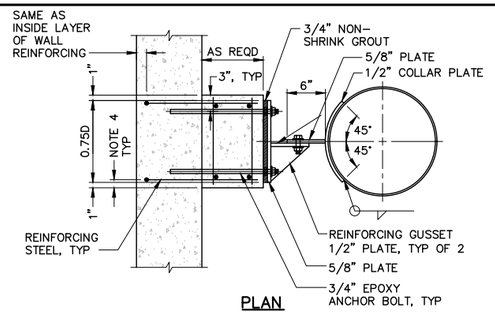

PLAN

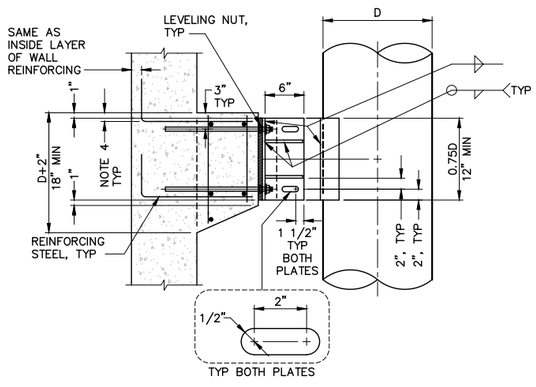

ELEVATION

NOTES:

1. ADJUST THICKNESS OF CONRETE BASE ACCORDINGLY TO MAINTAIN SIZE OF STEEL PLATE PIECES AND SPACING FROM WALL AS SHOWN ON PLANS.
2. ALL BOLTS SHALL BE 0.75" DIAMETER.
3. ALL REINFORCING SHALL BE #4 BARS.
4. ALL REINFORCING SHALL HAVE 2" OF CONCRETE COVER.
5. VERIFY PIPE OD PRIOR TO FABRICATION.
6. HOT DIP GALVANIZE STEEL COMPONENTS AFTER FABRICATION.

VERTICAL PIPE SUPPORT M117

NTS

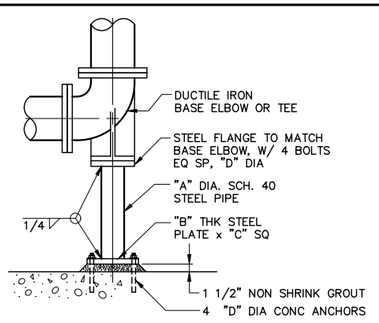

CAST IRON ELBOW

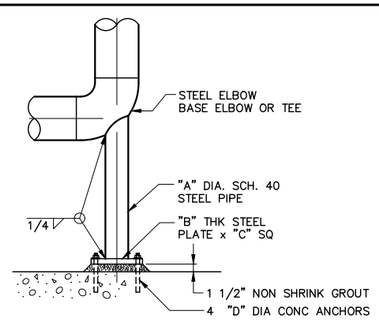

STEEL ELBOW

ELBOW/TEE SIZE (IN)	DIMENSIONS IN INCHES "A"	"B"	"C"	"D"
4	2	3/8	6	5/8
6	2 1/2	3/8	7	5/8
8	4	1/2	9	5/8
10	4	1/2	9	5/8
12	6	1/2	11	3/4
14	6	1/2	11	3/4
16	6	1/2	11	3/4
18	8	1/2	13 1/2	3/4
20	8	1/2	13 1/2	3/4
24	8	1/2	13 1/2	3/4
30	10	3/4	16	7/8
36	12	3/4	19	7/8
42	16	3/4	23 1/2	1
48	18	3/4	25	1 1/16

BASE ELBOW SUPPORT M120

NTS

REGISTERED PROFESSIONAL ENGINEER — MARK W. TAKEMOTO — No. 64369 — Exp. 06-30-17 — CIVIL — STATE OF CALIFORNIA

0" 1" — VERIFY SCALES — BAR IS ONE INCH LONG ON FULL SIZE DRAWING. IF NOT ONE INCH LONG ON THIS DRAWING, ADJUST SCALES ACCORDINGLY

REV	DATE	BY	APVD	DESCRIPTION

DESIGNED M. TAKEMOTO
DRAWN S. JUNG
CHECKED M. NAKAMOTO

SUBMITTED: MARK TAKEMOTO, RMC PROJECT ENGINEER CE-64369
APPROVED: STEVE CLARY, RMC ENGINEER CE-30318

SAUSALITO · MARIN CITY SANITARY DISTRICT

TREATMENT AND WET WEATHER FLOW UPGRADE

MECHANICAL STANDARD DETAILS - 3

DWG NO M-3
SHEET NO 115 OF 226
PROJ NO 055-006
DATE NOVEMBER 2016

FILENAME: 0055-006-M-2 11-11-16 12:11pm CTo ‖ XREFS: ‖ X-SMCSD-TBLK | MTakemoto-PE-stamp |<<--

Last Saved By: mtakemoto 3-14-16 10:24am

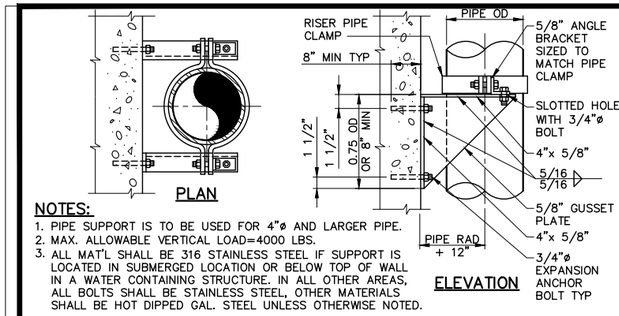

NOTES:
1. PIPE SUPPORT IS TO BE USED FOR 4"ø AND LARGER PIPE.
2. MAX. ALLOWABLE VERTICAL LOAD=4000 LBS.
3. ALL MAT'L SHALL BE 316 STAINLESS STEEL IF SUPPORT IS LOCATED IN SUBMERGED LOCATION OR BELOW TOP OF WALL IN A WATER CONTAINING STRUCTURE. IN ALL OTHER AREAS, ALL BOLTS SHALL BE STAINLESS STEEL, OTHER MATERIALS SHALL BE HOT DIPPED GAL. STEEL UNLESS OTHERWISE NOTED.

PIPE SUPPORT (M121)
NTS

NOTES:
1. FOR INSULATED PIPES, USE GRINNELL FIG. 167 OR ELCEN FIG. 219 INSULATION PROTECTION SHIELD. SIZE CLEVIS FOR SHIELD DIAMETER.
2. TOTAL LOADING ON EACH COMPONENT SHALL NOT EXCEED MFR'S RECOMMENDATIONS.
3. IN AREAS DESIGNATED CORROSIVE, HYDRAULIC STRUCTURES AND SUBMERGED CONDITIONS, PROVIDE TYPE 316 STAINLESS STEEL OR FIBERGLASS MATERIALS.

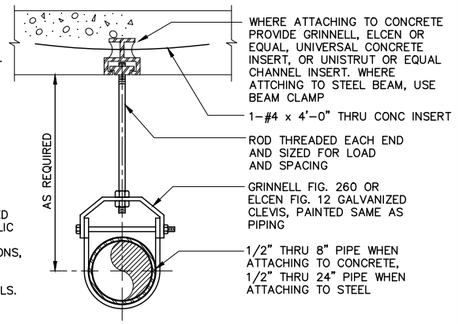

TYPE 1

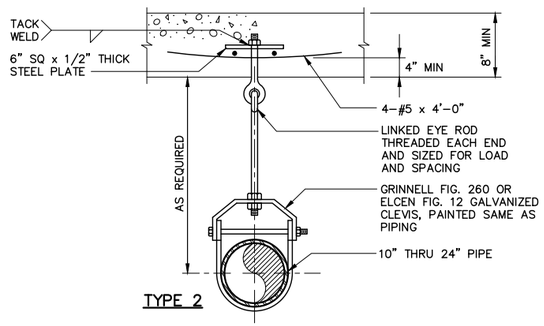

TYPE 2

TYPE 3

PIPE HANGER (M125)
NTS

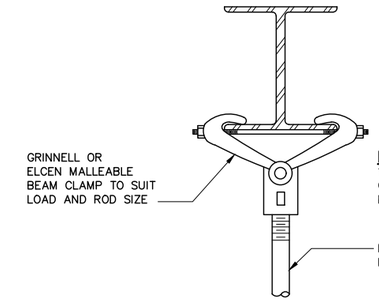

NOTE:
TOTAL LOADING OF EACH BEAM CLAMP SHALL NOT EXCEED MFR'S RECOMMENDED LOADINGS.

BEAM CLAMP (M127)
NTS

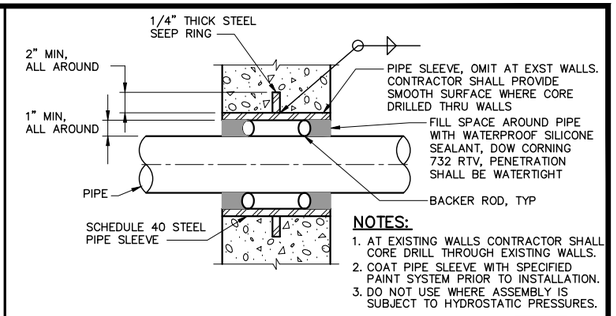

NOTES:
1. AT EXISTING WALLS CONTRACTOR SHALL CORE DRILL THROUGH EXISTING WALLS.
2. COAT PIPE SLEEVE WITH SPECIFIED PAINT SYSTEM PRIOR TO INSTALLATION.
3. DO NOT USE WHERE ASSEMBLY IS SUBJECT TO HYDROSTATIC PRESSURES.

PIPE SLEEVE (M134)
NTS

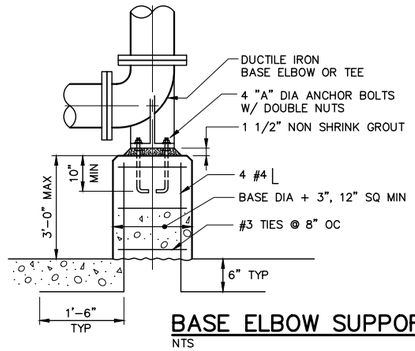

ELBOW/TEE SIZE (IN)	'A' (IN)
4	5/8
6	5/8
8	5/8
10	5/8
12	3/4
14	3/4
16	3/4
18	3/4
20	3/4
24	3/4
30	7/8
36	7/8
42	1
48	1 1/16

BASE ELBOW SUPPORT (M122)
NTS

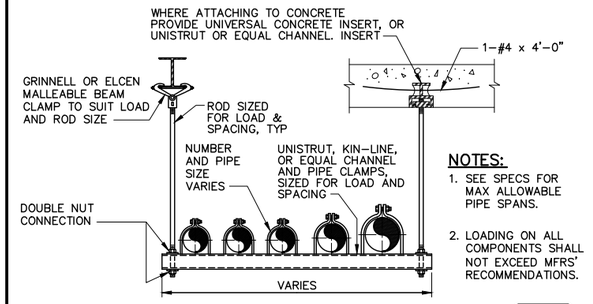

NOTES:
1. SEE SPECS FOR MAX ALLOWABLE PIPE SPANS.
2. LOADING ON ALL COMPONENTS SHALL NOT EXCEED MFRS' RECOMMENDATIONS.

TRAPEZE SUPPORT (M128)
NTS

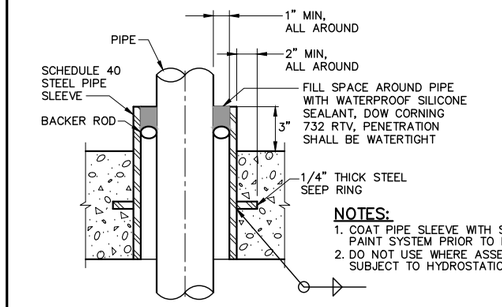

NOTES:
1. COAT PIPE SLEEVE WITH SPECIFIED PAINT SYSTEM PRIOR TO INSTALLATION.
2. DO NOT USE WHERE ASSEMBLY IS SUBJECT TO HYDROSTATIC PRESSURES.

FLOOR SLEEVE (M136)
NTS

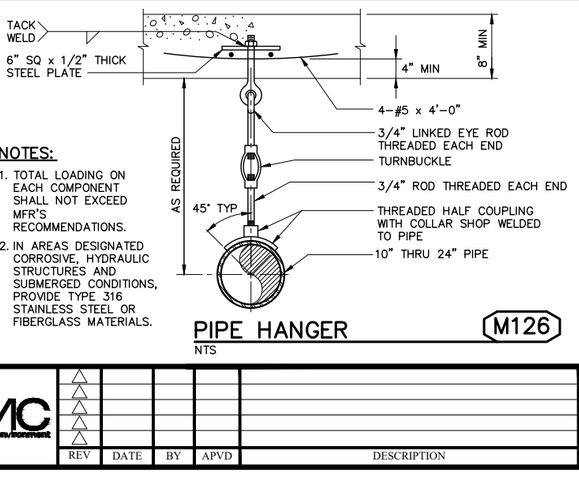

NOTES:
1. TOTAL LOADING ON EACH COMPONENT SHALL NOT EXCEED MFR'S RECOMMENDATIONS.
2. IN AREAS DESIGNATED CORROSIVE, HYDRAULIC STRUCTURES AND SUBMERGED CONDITIONS, PROVIDE TYPE 316 STAINLESS STEEL OR FIBERGLASS MATERIALS.

PIPE HANGER (M126)
NTS

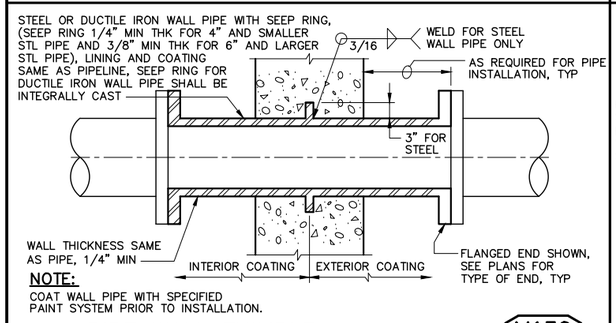

NOTE:
COAT WALL PIPE WITH SPECIFIED PAINT SYSTEM PRIOR TO INSTALLATION.

PIPE WALL THIMBLE (M130)
NTS

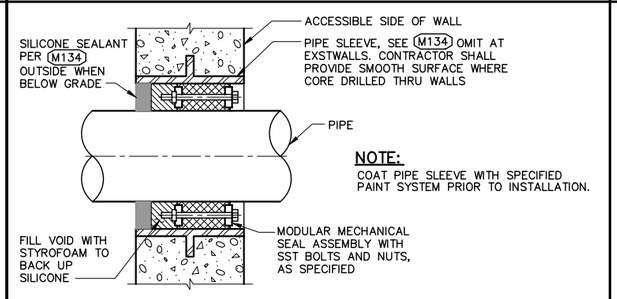

NOTE:
COAT PIPE SLEEVE WITH SPECIFIED PAINT SYSTEM PRIOR TO INSTALLATION.

MODULAR MECHANICAL SEAL (M132)
NTS

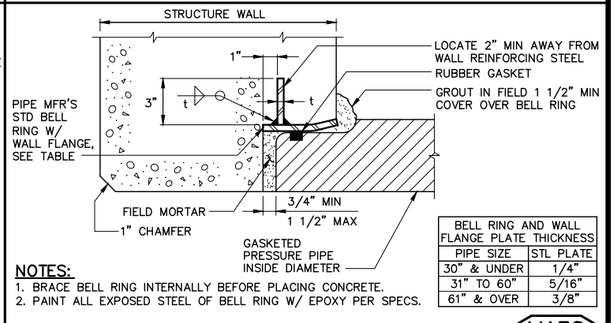

BELL RING AND WALL FLANGE PLATE THICKNESS	
PIPE SIZE	STL PLATE
30" & UNDER	1/4"
31" TO 60"	5/16"
61" & OVER	3/8"

NOTES:
1. BRACE BELL RING INTERNALLY BEFORE PLACING CONCRETE.
2. PAINT ALL EXPOSED STEEL OF BELL RING W/ EPOXY PER SPECS.

GASKET PIPE TERMINATION AT STRUCTURE (M138)
NTS

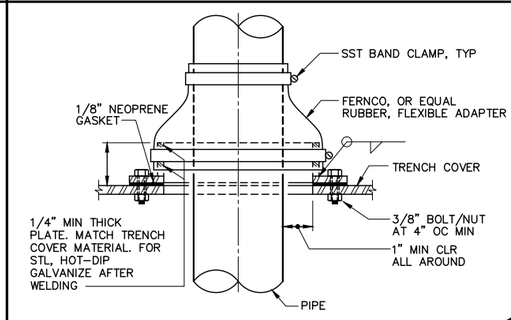

TRENCH COVER PENETRATION (M140)
NTS

REGISTERED PROFESSIONAL ENGINEER MARK W. TAKEMOTO No. 64369 Exp. 06-30-17 CIVIL STATE OF CALIFORNIA

0" 1" — VERIFY SCALES — BAR IS ONE INCH LONG ON FULL SIZE DRAWING. IF NOT ONE INCH LONG ON THIS DRAWING, ADJUST SCALES ACCORDINGLY

RMC water and environment

REV	DATE	BY	APVD	DESCRIPTION

DESIGNED M. TAKEMOTO
DRAWN S. JUNG
CHECKED M. NAKAMOTO

SUBMITTED: MARK TAKEMOTO, RMC PROJECT ENGINEER CE-64369
APPROVED: STEVE CLARY, RMC ENGINEER CE-30318

SAUSALITO · MARIN CITY SANITARY DISTRICT

TREATMENT AND WET WEATHER FLOW UPGRADE

MECHANICAL STANDARD DETAILS - 4

DWG NO M-4
SHEET NO 116 OF 226
PROJ NO 055-006
DATE NOVEMBER 2016

FILENAME: 0055-006-M-2 11-11-16 12:11pm CTo | XREFS: | X-SMC30-TBLK | N:\takemoto-PE-stamp |<<--

Last Saved By: mtakemoto 3-14-16 10:24am

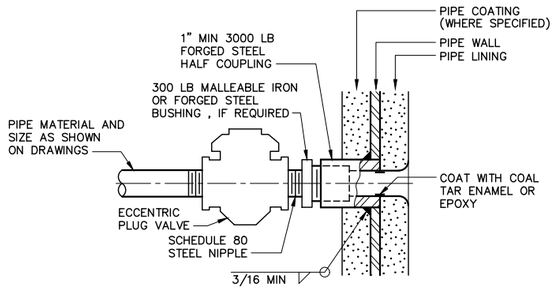

2" AND SMALLER PIPE CONNECTION (M150)

NTS

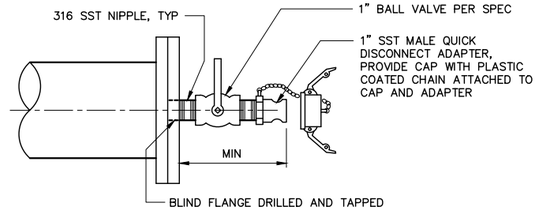

FLUSHING CONNECTION (M156)

NTS

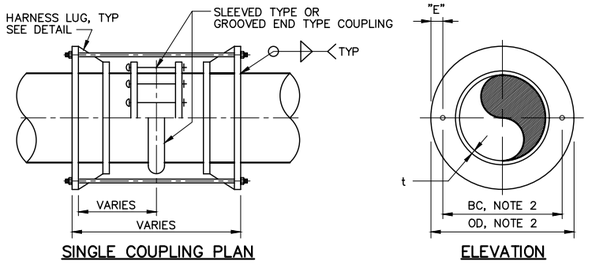

SINGLE COUPLING PLAN

ELEVATION

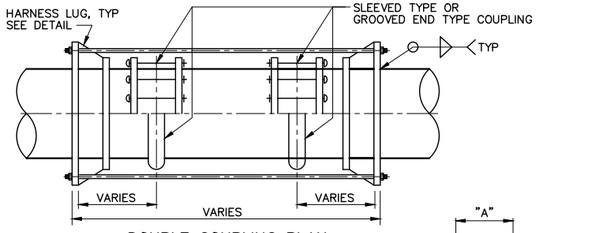

DOUBLE COUPLING PLAN

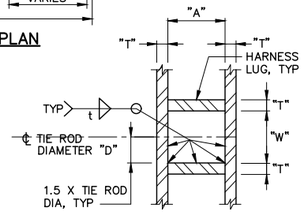

STEEL PIPE HARNESS SET SCHEDULE

PIPE DESCRIPTION	MAX TEST PRESSURE (PSIG)	DIMENSIONS IN INCHES								
		PIPE CYLINDER OD (SEE NOTE 6)	T	A	W	E	D	BACK PLATE OD	FRONT PLATE OD	NO. TIE RODS
< 12"	160	–	0.38	5.00	1.38	3.00	0.63	–	–	4
12–18"	35	–	0.38	5.00	1.38	3.00	0.63	–	–	2
24"	25	35.13	0.38	5.00	1.50	3.13	0.63	–	–	4
30"	35	31.13	0.38	5.00	1.38	3.00	0.63	–	–	4
36"	10	37.13	0.38	5.00	1.38	3.00	0.63	–	–	4
42"	10	–	0.38	5.00	1.38	3.00	0.63	–	–	4
48"	10	–	0.38	5.00	1.38	3.00	0.63	–	–	4
48"	35	–	0.38	5.00	1.38	3.00	0.63	–	–	4

NOTES:

1. WELD SIZE SHALL BE MINIMUM REQUIRED BY AMERICAN WELDING SOCIETY, MINIMUM TO MATCH PIPE WALL.
2. BOLT CIRCLE AND OD SHALL BE SIZED TO ENSURE 1/2" MIN AND 1" MAX CLEARANCE TO COUPLING.
3. SMALLER STIFFENER PLATE SHALL BE 2" HIGH EXCEPT WHEN BOLT DIAMETER EXCEEDS 1", THEN PLATE SHALL BE 2 1/2" HIGH.
4. USE THIS DETAIL FOR ONE END OF TIE RODS WHERE THE OPPOSITE END OF TIE RODS IS ATTACHED TO A FLANGE OR A RESTRAINED FLANGE COUPLING ADAPTER.
5. PROVIDE INSULATING SLEEVE AND WASHERS WHERE ELECTRICAL ISOLATION IS REQUIRED. REFER TO CATHODIC PROTECTION, YARD PIPING, AND MECHANICAL DRAWINGS.
6. CONTRACTOR SHALL VERIFY PIPE OD PRIOR TO HARNESS FABRICATION.
7. HARNESS SHALL SPAN PAIRS OF MECHANICAL SLEEVE COUPLINGS WHERE INDICATED.
8. FOR PIPE MATERIAL OTHER THAN STEEL, CONTRACTOR SHALL PROVIDE EQUIVALENT HARNESSING ACCEPTABLE TO THE ENGINEER.
9. WHERE 4 TIE RODS ARE REQUIRED, STRADDLE HORIZONTAL AND VERTICAL CENTERLINES UNLESS OTHERWISE REQUIRED.

THRUST RESTRAINT HARNESS (M160)

NTS

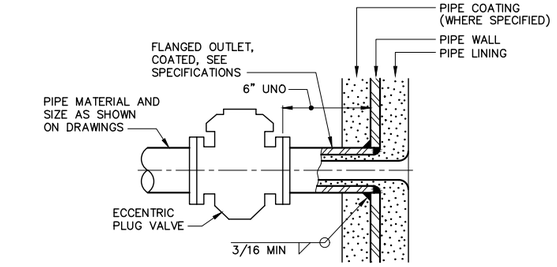

3" AND LARGER PIPE CONNECTION (M152)

NTS

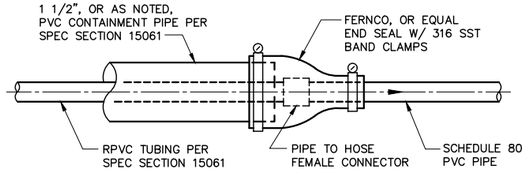

DOUBLE/SINGLE WALL PIPE TRANSITION (M158)

NTS

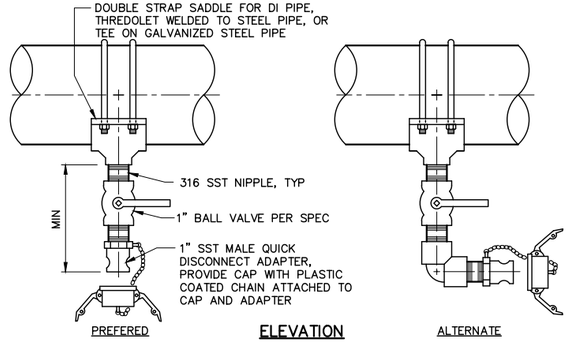

ELEVATION
FOR FERROUS METAL PIPING

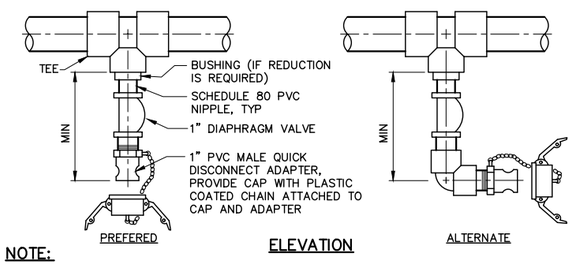

ELEVATION
FOR PVC PIPING

NOTE:
FOR LINE SIZES SMALLER THAN 1", VALVE AND ADAPTER SIZES SHALL MATCH LINE SIZE.

FLUSHING/DRAIN CONNECTION (M154)

NTS

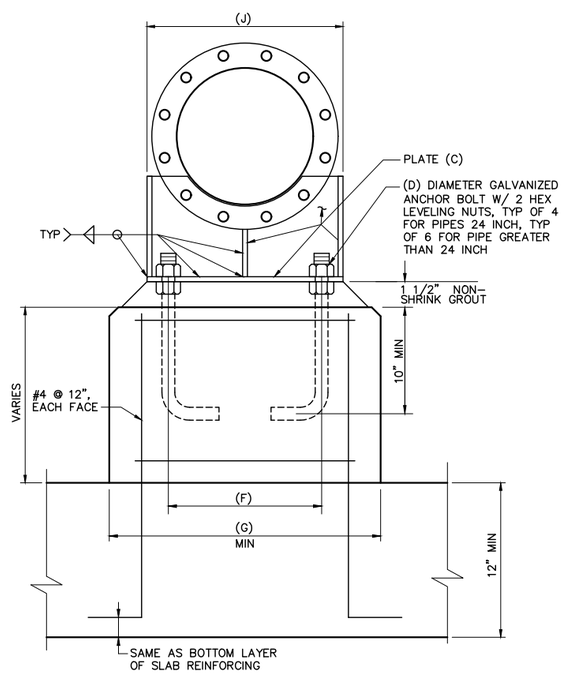

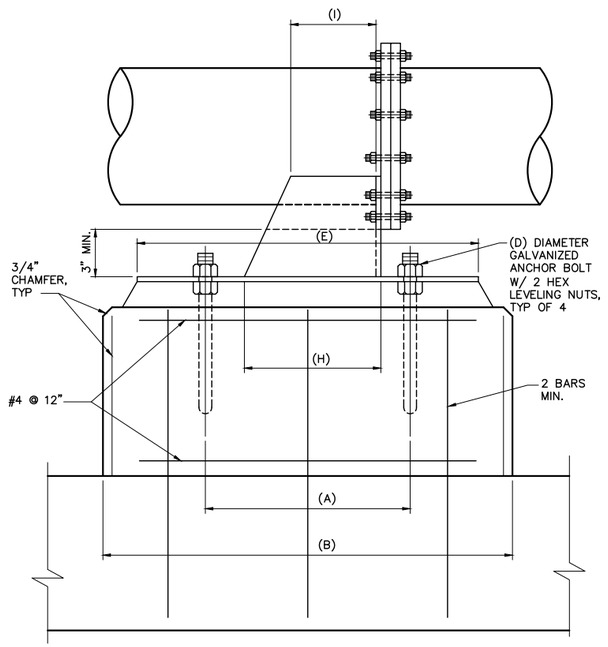

PIPE SUPPORT SCHEDULE

PIPE SIZE (NOM)	DIMENSIONS IN INCHES									
	(A)	(B)	(C)	(D)	(E)	(F)	(G)	(H)	(I)	(J)
8	12	24	1/2	3/4	20	9	16	8	5	12
16	16	24	1/2	3/4	20	21	25	12	4	21
18	19	30	1/2	3/4	26	23	26	15	5	22
30	24	40	3/4	1 1/4	36	36	40	20	6	36

NOTES:

1. HOT–DIP GALVANIZE STEEL COMPONENTS AFTER FABRICATION.
2. WHEN ATTACHING TO EXISTING CONCRETE, PROVIDE EQUIVALENT SIZE ADHESIVE ANCHORS.
3. VERIFY PIPE OD PRIOR TO FABRICATION.

EXPOSED PIPE THRUST RESTRAINT (M161)

NTS

REGISTERED PROFESSIONAL ENGINEER — MARK W. TAKEMOTO — No. 64369 — Exp. 06-30-17 — CIVIL — STATE OF CALIFORNIA

0" 1" — VERIFY SCALES — BAR IS ONE INCH LONG ON FULL SIZE DRAWING. IF NOT ONE INCH LONG ON THIS DRAWING, ADJUST SCALES ACCORDINGLY

REV	DATE	BY	APVD	DESCRIPTION

DESIGNED	M. TAKEMOTO
DRAWN	S. JUNG
CHECKED	M. NAKAMOTO

SUBMITTED: MARK TAKEMOTO, RMC PROJECT ENGINEER CE-64369

APPROVED: STEVE CLARY, RMC ENGINEER CE-30318

TREATMENT AND WET WEATHER FLOW UPGRADE

MECHANICAL STANDARD DETAILS - 5

DWG NO	M-5
SHEET NO	117 OF 226
PROJ NO	055-006
DATE	NOVEMBER 2016

FILENAME: 0055-006-M-2 11-11-16 12:11pm CTo ‖ XREFS: X-SMCSD-TBLK | MTakemoto-PE-stamp |<<--

Last Saved By: mtakemoto 3-14-16 10:24am

TIE ROD SCHEDULE

PIPE SIZE (NOM IN)	MINIMUM STEEL PIPE WALL THICKNESS (IN) (NOTE 5)	MAXIMUM TEST PRESSURE					
		25 PSIG		50 PSIG		100 PSIG	
		NUMBER REQUIRED	DIAMETER (IN)	NUMBER REQUIRED	DIAMETER (IN)	NUMBER REQUIRED	DIAMETER (IN)
6	3/16	2	5/8	2	5/8	2	5/8
8	3/16	2	5/8	2	5/8	2	5/8
10	3/16	2	5/8	2	5/8	2	5/8
12	3/16	2	5/8	2	5/8	2	5/8
14	3/16	2	5/8	2	5/8	2	3/4
16	3/16	2	5/8	2	5/8	2	3/4
18	1/4	2	5/8	2	5/8	2	7/8
20	1/4	2	5/8	2	3/4	2	7/8

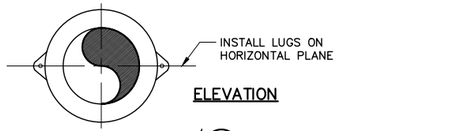

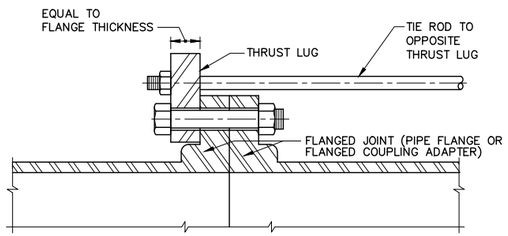

NOTES:

1. PLATE: ASTM A283 GRADE D.
2. TIE RODS: ASTM A193 GRADE B7.
3. NUTS: ASTM A194 GRADE 2H.
4. INSTALL TIE RODS IN HORIZONTAL PLANE.
5. INCREASE STEEL PIPE WALL THICKNESS TO TIE ROD SCHEDULE MINIMUM THICKNESS IF SPECIFIED PIPE WALL THICKNESS IS LESS. IF INCREASING IS REQUIRED, INCREASE FROM FLANGE TO 2'–0" MINIMUM FROM FLANGE.
6. THIS DETAIL SHALL BE USED WHERE FCA IS ADJACENT TO OTHER FCA OR FLANGES. CONNECT TIE RODS FROM LUGS AT FCA TO LUGS AT ADJACENT FCA OR FLANGES. WHERE ADJACENT FCA OR FLANGE IS NOT PRESENT, INSTALL THRUST HARNESS PER DETAIL (M160).
7. TIGHTEN TIE ROD NUTS ALTERNATELY AND EQUALLY TO ALIGN EVENLY AND TO PROVIDE EQUAL STRESS ON ALL TIE RODS WHEN SUBJECT TO OPERATING PRESSURES. NUTS SHALL BE TIGHTENED SNUG. THREADS SHALL PROTRUDE 1/2" MINIMUM FROM NUTS AFTER TIGHTENING. PEEN THREADS AFTER TIGHTENING TO LOCK NUTS IN PLACE.

THRUST RESTRAINT FOR FLEXIBLE COUPLING OR FLANGE COUPLING ADAPTER (M162)

NTS

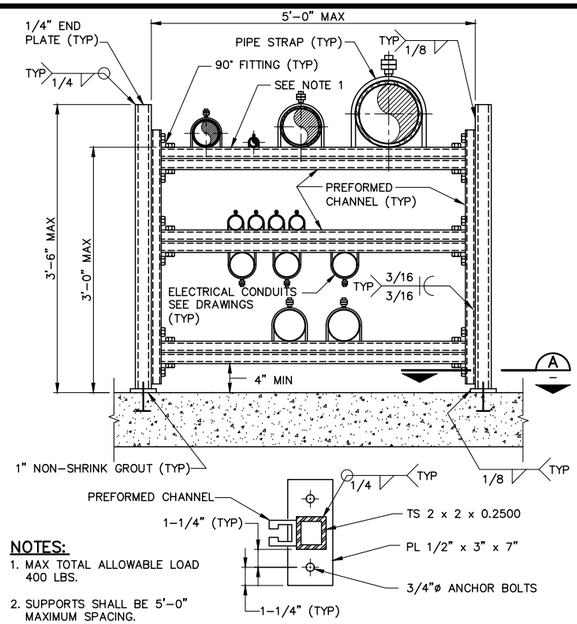

NOTES:

1. MAX TOTAL ALLOWABLE LOAD 400 LBS.
2. SUPPORTS SHALL BE 5'–0" MAXIMUM SPACING.
3. HOT–DIP GALV SUPPORT COLUMN ASSEMBLIES AFTER FABRICATION.

PIPE RACK (M164)

NTS

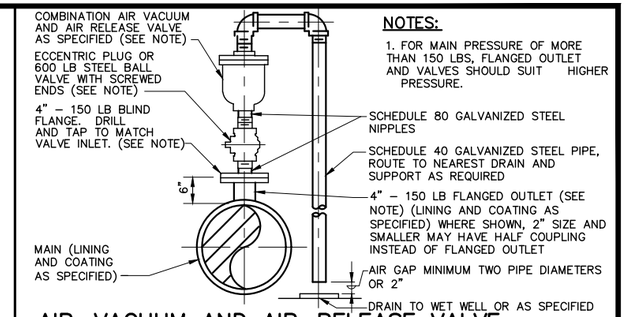

NOTES:

1. FOR MAIN PRESSURE OF MORE THAN 150 LBS, FLANGED OUTLET AND VALVES SHOULD SUIT HIGHER PRESSURE.

AIR–VACUUM AND AIR–RELEASE VALVE ASSEMBLY 3" AND SMALLER (M172)

NTS

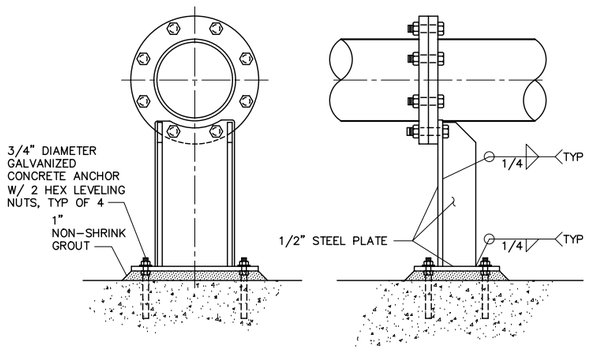

NOTES:

1. HOT–DIP GALVANIZE STEEL COMPONENTS AFTER FABRICATION.
2. WHEN ATTACHING TO EXISTING CONCRETE, PROVIDE EQUIVALENT SIZE ADHESIVE ANCHORS.
3. VERIFY PIPE OD PRIOR TO FABRICATION.

PIPE SUPPORT 4" THRU 8" (M163)

NTS

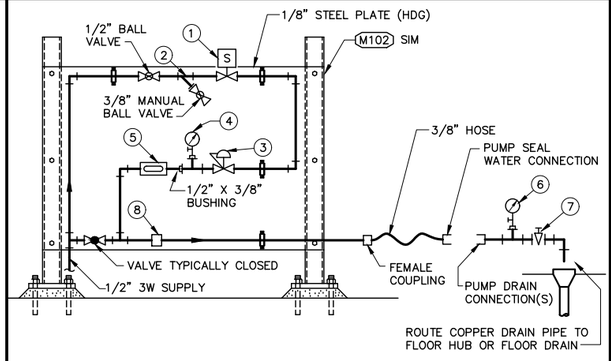

(1) SOLENOID VALVE, SEE P&ID

(2) WYE STRAINER

(3) 1/2" PRESSURE REGULATOR SET OUTLET PRESSURE AS RECOMMENDED BY PUMP MFR. FOR CLARIFIER EQUIPMENT, COORDINATE WITH MFR.

(4) PRESSURE GAUGE, RANGE AS REQUIRED BY PUMP MFR (REQUIRED ONLY FOR SINGLE MECHANICAL SEAL AND PACKING TYPE PUMP SEALS)

(5) 3/8" SIGHT GLASS (REQUIRED FOR MECHANICAL SEAL ONLY)

(6) PRESSURE GAUGE, RANGE AS REQUIRED BY PUMP MFR (REQUIRED FOR DOUBLE MECHANICAL PUMP SEALS ONLY)

(7) 1/2" NEEDLE VALVE (REQUIRED FOR DOUBLE MECHANICAL PUMP SEALS ONLY)

(8) FLOW SWITCH (FSL)

NOTES:

1. PIPING CONFIGURATION IS SHOWN SCHEMATICALLY. CONTRACTOR SHALL CONFIGURE AS REQUIRED.
1. ALTERNATE CONFIGURATION. ASSEMBLY SHALL BE WALL MOUNTED, IF SPECIFIED.

SEAL WATER ASSEMBLY (M170)

NTS

REGISTERED PROFESSIONAL ENGINEER — MARK W. TAKEMOTO — No. 64369 — Exp. 06-30-17 — CIVIL — STATE OF CALIFORNIA

0" 1" — VERIFY SCALES — BAR IS ONE INCH LONG ON FULL SIZE DRAWING. IF NOT ONE INCH LONG ON THIS DRAWING, ADJUST SCALES ACCORDINGLY

RMC water and environment

REV	DATE	BY	APVD	DESCRIPTION
1				
2				
3				
4				
5				

DESIGNED M. TAKEMOTO
DRAWN S. JUNG
CHECKED M. NAKAMOTO

SUBMITTED: MARK TAKEMOTO, RMC PROJECT ENGINEER CE-64369

APPROVED: STEVE CLARY, RMC ENGINEER CE-30318

SAUSALITO · MARIN CITY SANITARY DISTRICT

TREATMENT AND WET WEATHER FLOW UPGRADE

MECHANICAL STANDARD DETAILS - 6

DWG NO M-6
SHEET NO 118 OF 226
PROJ NO 055-006
DATE NOVEMBER 2016

FILENAME: 0055-006-M-2 11-11-16 12:11pm CTo ‖ XREFS‖ X-SMCSD-TBLK | MTakemoto-PE-stamp |<<--

Last Saved By: mtakemoto 3-14-16 10:24am

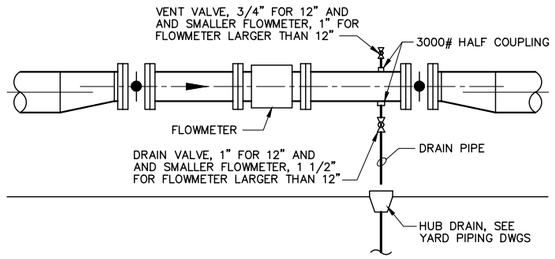

FLOWMETER VENT/DRAIN M214

NTS

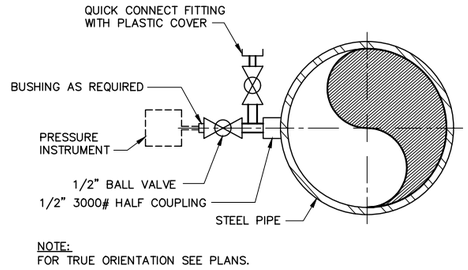

NOTE:
FOR TRUE ORIENTATION SEE PLANS.

PRESSURE INSTRUMENT CONNECTION M218

NTS

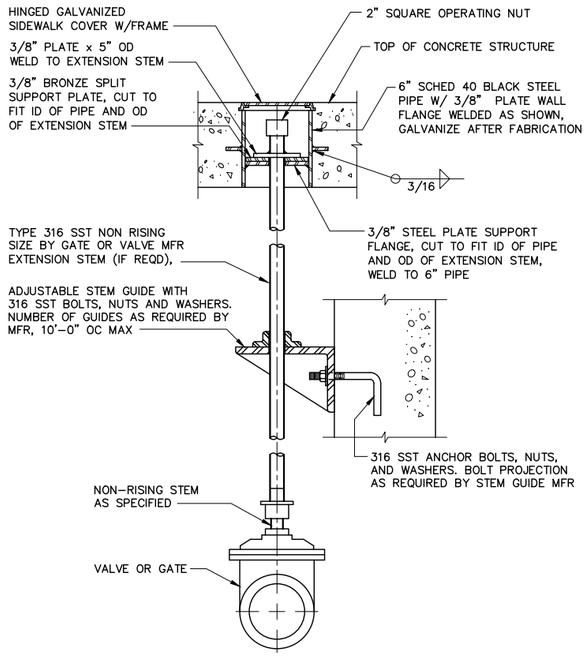

FLOOR BOX OPERATOR M230

NTS

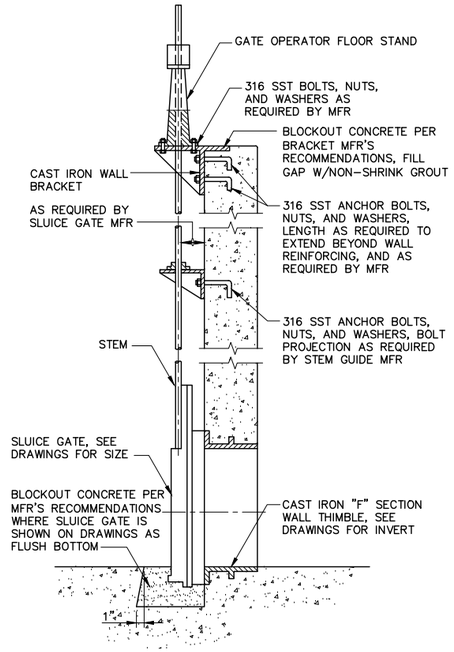

WALL BRACKET

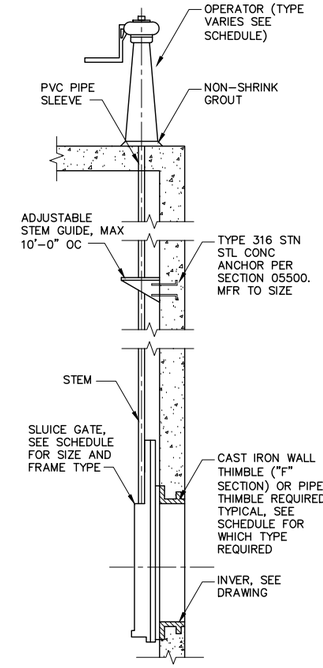

SLAB MOUNT

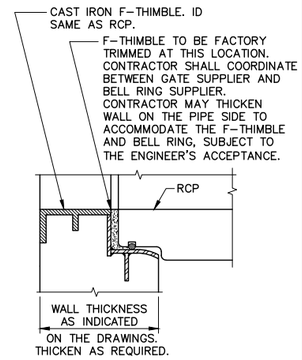

SLUICE GATE TO PIPE CONNECTION

NOTES:

1. DETAIL IS NOT APPLICATION SPECIFIC.
2. REFER TO MECHANICAL SCHEDULE FOR:
   - -FRAME TYPE (SELF CONTAINED OR NOT, SPIGOT BLACK, FLAT BACK F-TYPE OR FLANGE BACK)
   - -BOTTOM TYPE (FLUSH OR PORT)
   - -OPERATOR TYPE (HANDWHEEL, HANDCRANK, 2" NUT OR MOTOR)
   - -PEDESTAL TYPE (FLOOR, BENCH, OFFSET OR NOT)

SLUICE GATE M250

NTS

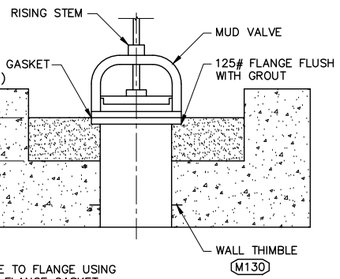

NOTE:

1. INSTALL VALVE TO FLANGE USING SOFT RUBBER FLANGE GASKET.

MUD VALVE M233

NTS

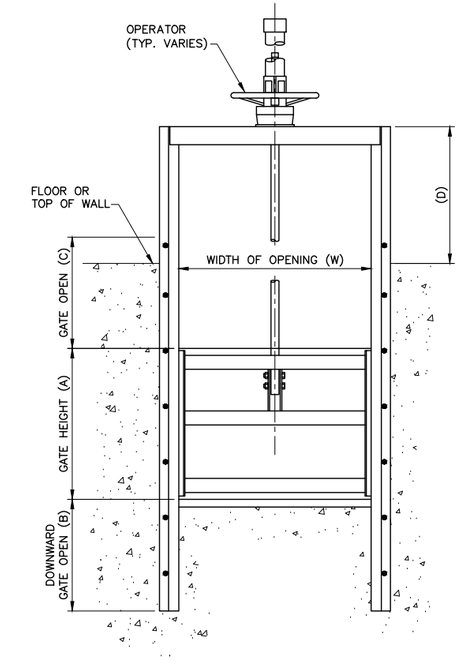

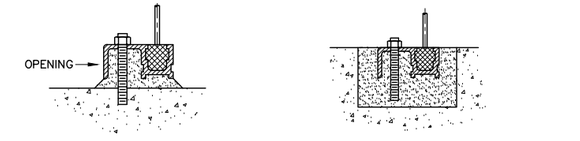

BOTTOM CLOSURE SURFACE BOTTOM CLOSURE EMBEDDED

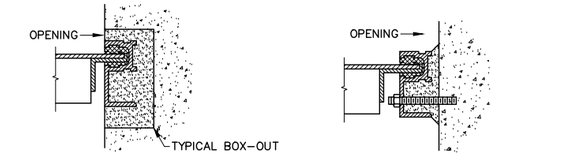

IN-CHANNEL EMBEDDED IN-CHANNEL SURFACE

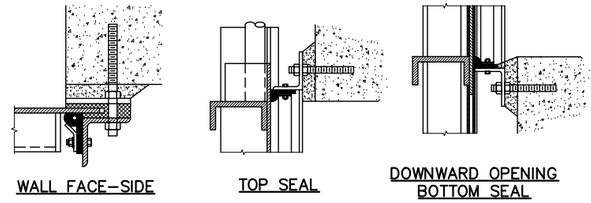

WALL FACE-SIDE TOP SEAL DOWNWARD OPENING BOTTOM SEAL

SLIDE GATE M254

NTS

SECTION * MATERIAL AND COATING SHALL MATCH GRATING

OPERATING NUT ACCESS OPENING M232

NTS

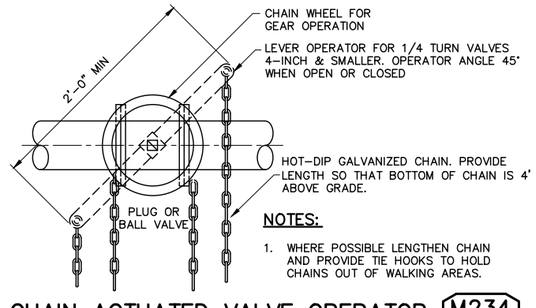

NOTES:

1. WHERE POSSIBLE LENGTHEN CHAIN AND PROVIDE TIE HOOKS TO HOLD CHAINS OUT OF WALKING AREAS.

CHAIN ACTUATED VALVE OPERATOR M234

NTS

REGISTERED PROFESSIONAL ENGINEER — Mark W. TAKEMOTO — No. 64369 — Exp. 06-30-17 — CIVIL — STATE OF CALIFORNIA

0" 1" — VERIFY SCALES — BAR IS ONE INCH LONG ON FULL SIZE DRAWING. IF NOT ONE INCH LONG ON THIS DRAWING, ADJUST SCALES ACCORDINGLY

RMC water and environment

REV	DATE	BY	APVD	DESCRIPTION

DESIGNED	M. TAKEMOTO
DRAWN	S. JUNG
CHECKED	M. NAKAMOTO

SUBMITTED: MARK TAKEMOTO, RMC PROJECT ENGINEER CE-64369

APPROVED: STEVE CLARY, RMC ENGINEER CE-30318

SANITARY DISTRICT

TREATMENT AND WET WEATHER FLOW UPGRADE

MECHANICAL STANDARD DETAILS - 7

DWG NO	M-7
SHEET NO	119 OF 226
PROJ NO	055-006
DATE	NOVEMBER 2016

FILENAME: 0055-006-M-2 11-11-16 12:11pm CTo || XREFS: X-SMCSD-TBLK | MTakemoto-PE-stamp |<--

Last Saved By: mtakemoto 3-14-16 10:24am

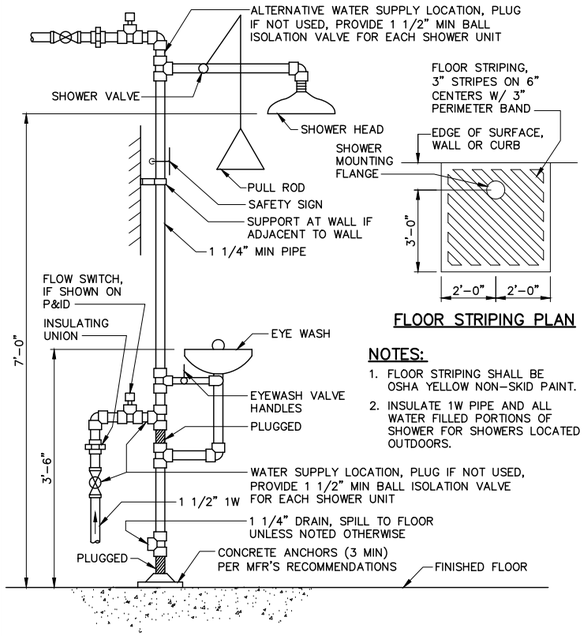

FLOOR STRIPING PLAN

NOTES:

1. FLOOR STRIPING SHALL BE OSHA YELLOW NON-SKID PAINT.
2. INSULATE 1W PIPE AND ALL WATER FILLED PORTIONS OF SHOWER FOR SHOWERS LOCATED OUTDOORS.

DRENCH SHOWER AND EYEWASH (M259)

NTS

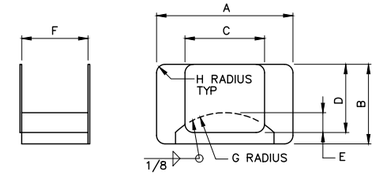

RACK TYPE	DIMENSIONS IN INCHES							
	A	B	C	D	E	F	G	H
TYPE 1 (3/4" & 1" HOSE)	18	11	10	9 1/2	3	7 1/2	9	1 1/4
TYPE 2 (1 1/2" HOSE)	24	14	14	12	3 1/2	10	12 1/2	1 1/2

HOSE RACK

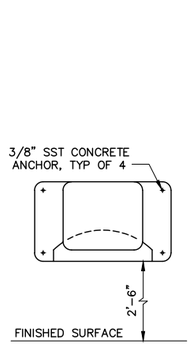

WALL MOUNTED

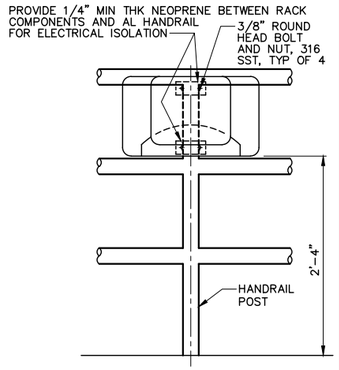

HANDRAIL MOUNTED

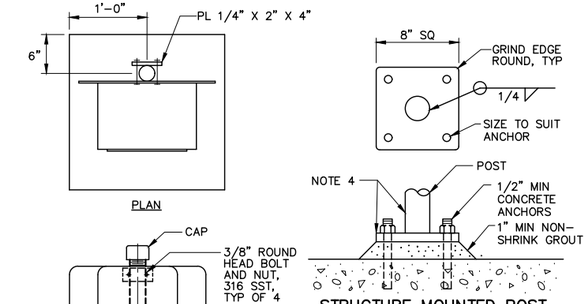

STRUCTURE MOUNTED POST

POST MOUNTED

NOTES:

1. CONSTRUCT HOSE RACK FROM 1/8" MIN A-36 STEEL PLATE. HOT DIP GALVANIZE HOSE RACK AFTER FABRICATION.
2. ATTACH A WARNING SIGN TO EACH HOSE RACK OR ADJACENT HOSE VALVE. SIGN SHALL READ:
   CAUTION
   NONPOTABLE WATER
   DO NOT DRINK
3. PROVIDE MINIMUM 75 FT OF HOSE AT EACH HOSE RACK. SIZE SHALL MATCH HOSE VALVE.
4. CONSTRUCT BASEPLATE FOR STRUCTURE MOUNTED POST FROM 1/2" MIN A-36 STEEL PLATE. HOT DIP GALVANIZE BASE AND POST AFTER FABRICATION.

HOSE RACK (M270)

NTS

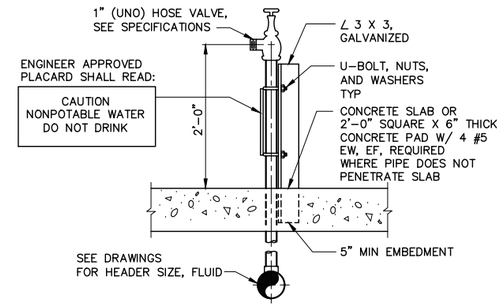

EXTERIOR HOSE VALVE TYPE 1

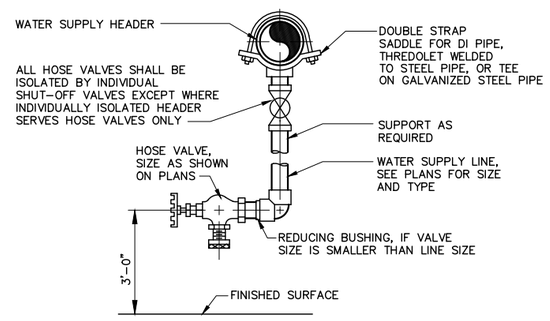

EXTERIOR HOSE VALVE TYPE 2

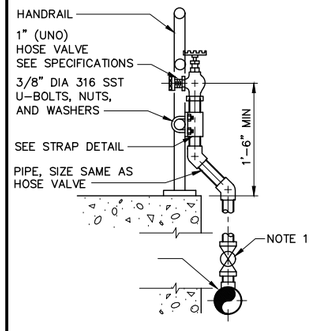

EXTERIOR HOSE VALVE TYPE 3

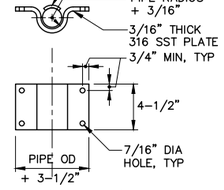

STRAP DETAIL

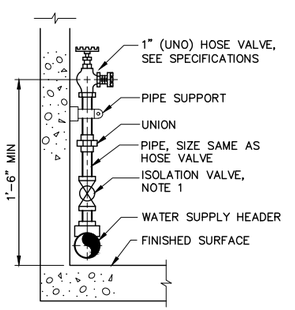

TYPE 1

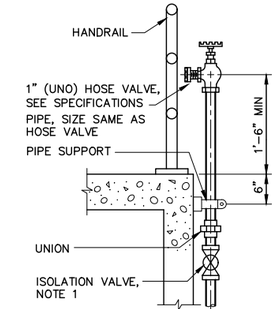

TYPE 2

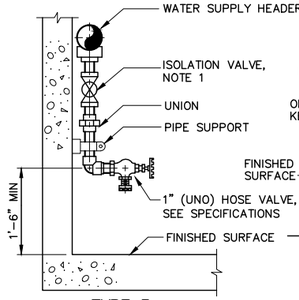

TYPE 3

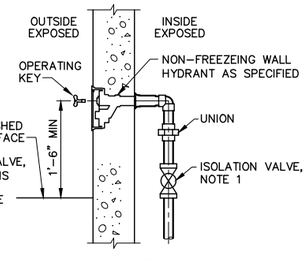

TYPE 4

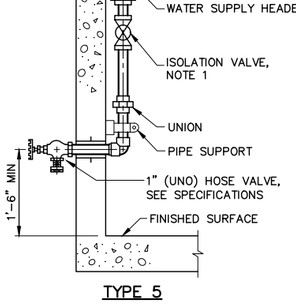

TYPE 5

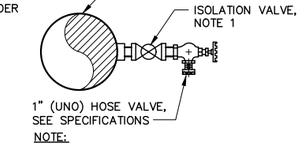

NOTE:
TAP ORIENTATION MAY VARY, SEE PLANS.

TYPE 6

NOTES:

1. ALL HOSE VALVES RAISERS OUTSIDE BUILDINGS LESS THEN 1 1/2" INCHES IN DIAMETER SHALL HAVE INSULATION FOR FREEZE PROTECTION.

HOSE VALVES (M275)

NTS

FILENAME: 0055-006-M-2 11-11-16 12:11pm CTo || XREFS: || X-SMCSD-TBLK | MTakemoto-PE-stamp |<<--
Last Saved By: mtakemoto 3-14-16 10:24am

REGISTERED PROFESSIONAL ENGINEER — MARK W. TAKEMOTO — No. 64369 — Exp. 06-30-17 — CIVIL — STATE OF CALIFORNIA

0" 1" — VERIFY SCALES — BAR IS ONE INCH LONG ON FULL SIZE DRAWING. IF NOT ONE INCH LONG ON THIS DRAWING, ADJUST SCALES ACCORDINGLY

RMC water and environment

REV	DATE	BY	APVD	DESCRIPTION

DESIGNED	M. TAKEMOTO
DRAWN	S. JUNG
CHECKED	M. NAKAMOTO

SUBMITTED: MARK TAKEMOTO, RMC PROJECT ENGINEER CE-64369

APPROVED: STEVE CLARY, RMC ENGINEER CE-30318

SAUSALITO · MARIN CITY SANITARY DISTRICT

TREATMENT AND WET WEATHER FLOW UPGRADE

MECHANICAL STANDARD DETAILS - 8

DWG NO	M-8
SHEET NO	120 OF 226
PROJ NO	055-006
DATE	NOVEMBER 2016

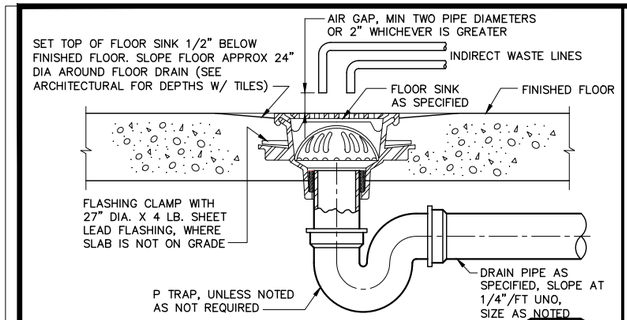

FLOOR SINK M280

NTS

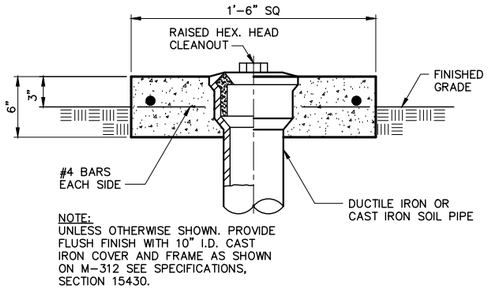

CLEANOUT TO GRADE M288

NTS

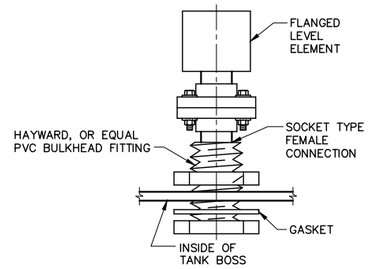

FLANGED LEVEL ELEMENT M306

NTS

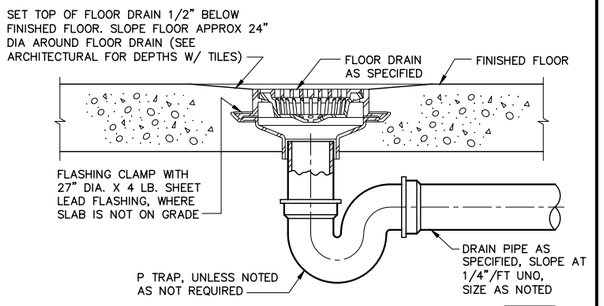

FLOOR DRAIN M282

NTS

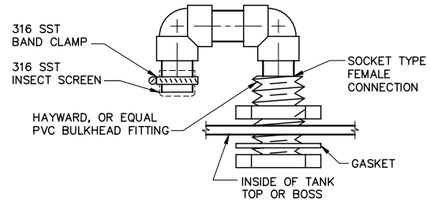

TANK VENT M308

NTS

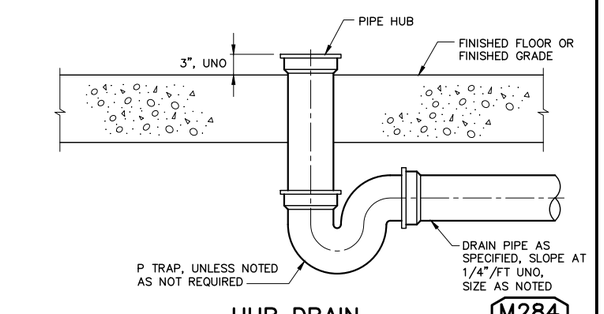

HUB DRAIN M284

NTS

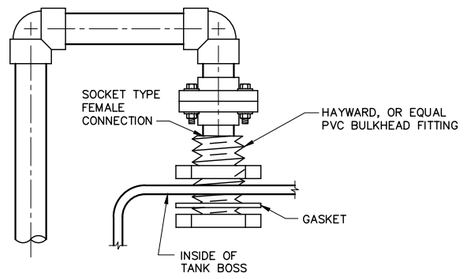

TOP NOZZLE M310

NTS

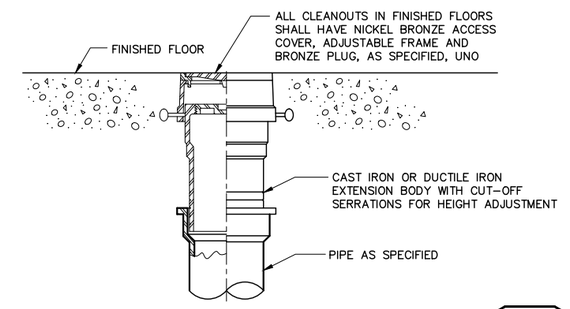

CLEANOUT IN FINISHED FLOOR M286

NTS

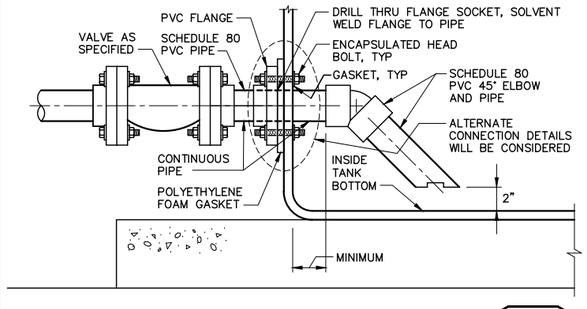

PUMP SUCTION M302

NTS

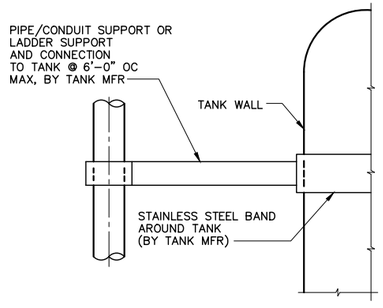

TANK PIPE AND LADDER SUPPORT M314

NTS

REGISTERED PROFESSIONAL ENGINEER — MARK W. TAKEMOTO — No. 64369 — Exp. 06-30-17 — CIVIL — STATE OF CALIFORNIA

0" 1" — VERIFY SCALES — BAR IS ONE INCH LONG ON FULL SIZE DRAWING. IF NOT ONE INCH LONG ON THIS DRAWING, ADJUST SCALES ACCORDINGLY

RMC water and environment

REV	DATE	BY	APVD	DESCRIPTION

DESIGNED M. TAKEMOTO
DRAWN S. JUNG
CHECKED M. NAKAMOTO

SUBMITTED: MARK TAKEMOTO, RMC PROJECT ENGINEER CE-64369
APPROVED: STEVE CLARY, RMC ENGINEER CE-30318

SAUSALITO · MARIN CITY SANITARY DISTRICT

TREATMENT AND WET WEATHER FLOW UPGRADE

MECHANICAL STANDARD DETAILS - 9

DWG NO M-9
SHEET NO 121 OF 226
PROJ NO 055-006
DATE NOVEMBER 2016

FILENAME: 0055-006-M-2 11-11-16 12:12pm CTo | XREFS: | X-SMCSD-TBLK | MTakemoto-PE-stamp |<<--

Last Saved By: mtakemoto 3-14-16 10:24am

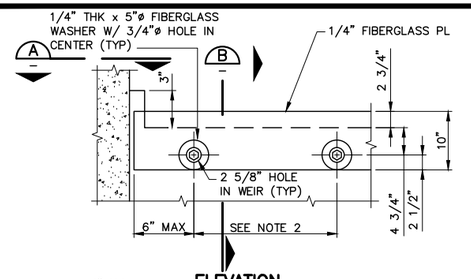

ELEVATION

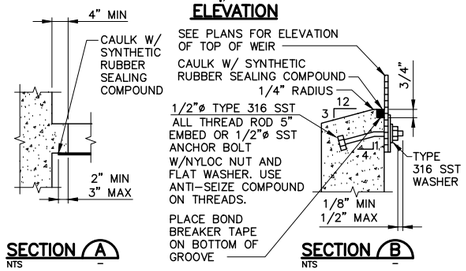

SECTION A
NTS

SECTION B
NTS

NOTES:

1. ALL EDGES, VOIDS, AND SPLICES SHALL BE SEALED WATER TIGHT W/SYNTHETIC RUBBER SEALING COMPOUND.
2. ANCHOR BOLT SPACING = 12" OC FOR STRAIGHT WEIRS AND 2'-0" OC FOR CIRCULAR WEIRS.
3. ADJUST WEIR LEVEL AT CALM WATER SURFACE TO WITHIN ± 1/32 INCH OF THE INDICATED ELEVATION. ENGINEER TO APPROVE PRIOR TO CAULKING.

PLAIN WEIR

NTS

M320

REGISTERED PROFESSIONAL ENGINEER — MARK W. TAKEMOTO — No. 64369 — Exp. 06-30-17 — CIVIL — STATE OF CALIFORNIA

0" 1" — VERIFY SCALES — BAR IS ONE INCH LONG ON FULL SIZE DRAWING. IF NOT ONE INCH LONG ON THIS DRAWING, ADJUST SCALES ACCORDINGLY

RMC water and environment

REV	DATE	BY	APVD	DESCRIPTION
1				
2				
3				
4				
5				

DESIGNED M. TAKEMOTO
DRAWN S. JUNG
CHECKED M. NAKAMOTO

SUBMITTED: MARK TAKEMOTO — RMC PROJECT ENGINEER CE-64369

APPROVED: STEVE CLARY — RMC ENGINEER CE-30318

SAUSALITO · MARIN CITY SANITARY DISTRICT

TREATMENT AND WET WEATHER FLOW UPGRADE

MECHANICAL STANDARD DETAILS - 10

DWG NO M-10
SHEET NO 122 OF 226
PROJ NO 055-006
DATE NOVEMBER 2016

FILENAME: 0055-006-M-2 11-11-16 12:12pm CTo || XREFS: X-SMCSD-TBLK | MTakemoto-PE-stamp |<<--

Last Saved By: mtakemoto 3-14-16 10:24am

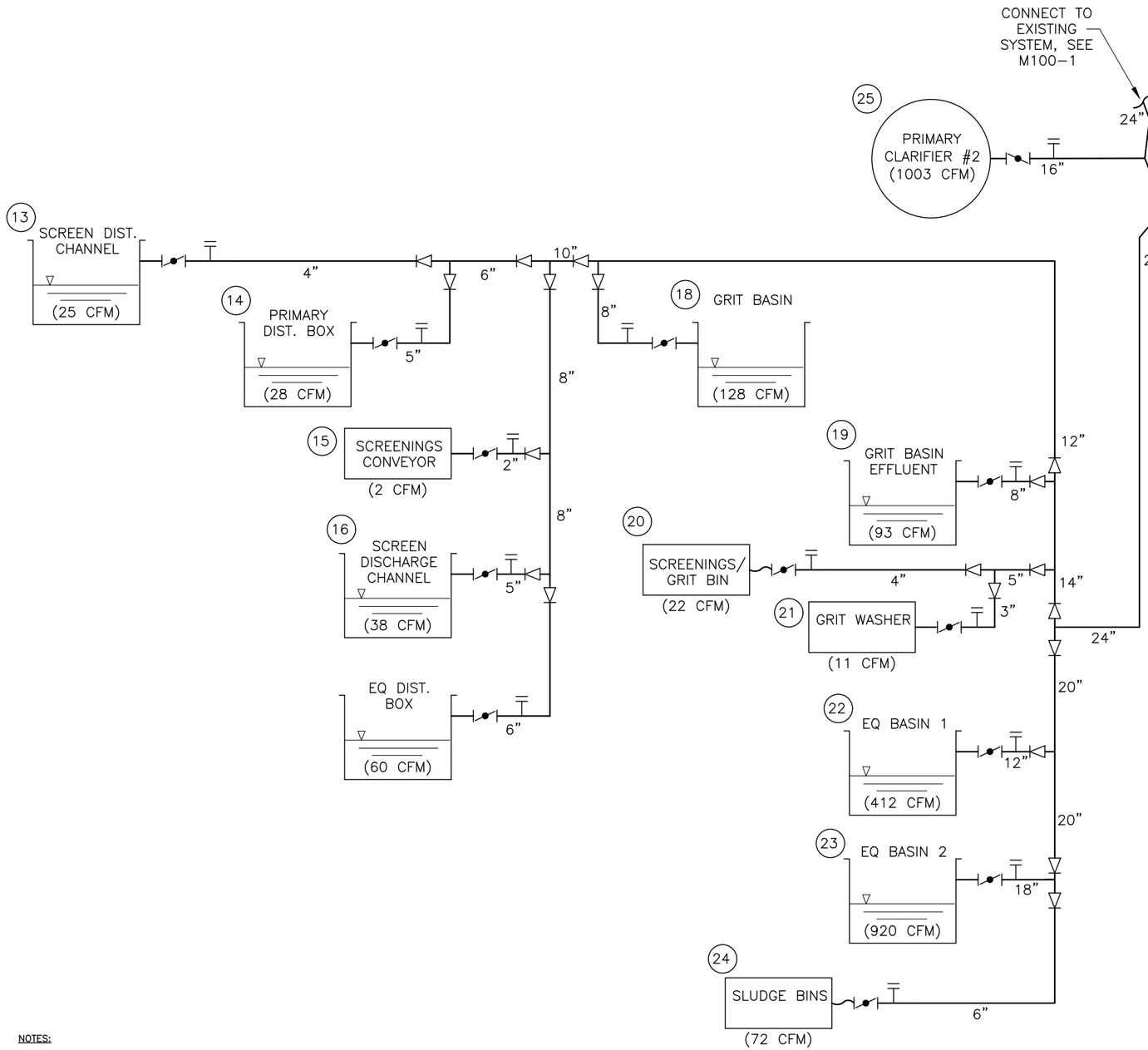

LEGEND:

- DAMPER
- INSERTION AIRFLOW PROBE
- REDUCER
- (XX) ZONE NUMBER
- FLEXIBLE CONNECTION

ODOR CONTROL SYSTEM AIR FLOW SCHEDULE

Zone #	Duct Size (IN.)	Location	Volume (CU FT)	Minimum CFM	% of Total	Minimum AC/HR
Existing Zones						
6	6	Primary Effluent Chamber (sample sump)	592	118	1.2%	12
1	8	Launder Trough	283	57	0.6%	12
3	8	Launder Trough	283	57	0.6%	12
4	8	Launder Trough	283	57	0.6%	12
7	8	Launder Trough	283	57	0.6%	12
		Subtotal Primary Clarifier	1,722	344	3.4%	12
5	8	~~Removed From Service~~	-	-	0.0%	0
2	18	~~Removed From Service~~	-	-	0.0%	0
9	12	Sludge Thickener	471	31	0.3%	4
8	12	Screw Press	251	50	0.5%	12
10	2	Screw Press	48	10	0.1%	12
		Subtotal Screw Press	299	60	0.6%	12
11	28	FFR #2	40,500	3,465	33.9%	5
12	28	FFR #1	40,500	3,505	34.3%	5
		Existing Subtotal	**83,491**	**7,406**	**72.5%**	-
New Zones						
13	4	Screen Dist Channel	124	25	0.3%	12
14	5	Primary Dist. Box	140	28	0.4%	12
15	2	Sreenings Conveyor	12	2	0.0%	12
16	5	Screen Discharge Channel	192	38	0.5%	12
17	6	EQ Dist Box	299	60	0.8%	12
18	8	Grit Basin	638	128	1.7%	12
19	8	Grit Basin Effluent	466	93	1.3%	12
20	4	Screenings/Grit Bin	108	22	0.3%	12
21	3	Grit Washer	57	11	0.2%	12
22	12	EQ Basin 1	4,125	412	5.6%	6
23	18	EQ Basin 2	9,201	920	12.4%	6
24	6	Sludge Bin	360	72	1.0%	12
25	18	Primary Clarifier No. 2	5,014	1,003	13.5%	12
		New Subtotal	**20,611**	**2,814**	**38.0%**	-
All Zones		**Total**	**104,102**	**10,220**	**100%**	-

NOTES:

1. DRAWING NOT TO SCALE.
2. ODOR CONTROL FOUL AIR LINES SHALL BE INSTALLED IN ACCORDANCE WITH SECTION 02510 – FRP DUCTWORK.
3. EXISTING AND NEW ODOR CONTROL ZONES SHALL BE BALANCED PER THE ODOR CONTROL AIR FLOW SCHEDULE AND IN ACCORDANCE WITH SECTION 15954 – HVAC SYSTEMS TESTING, ADJUSTING, AND BALANCING.

REGISTERED PROFESSIONAL ENGINEER MARK W. TAKEMOTO No. 64369 Exp. 06-30-17 CIVIL STATE OF CALIFORNIA

0" 1" — VERIFY SCALES — BAR IS ONE INCH LONG ON FULL SIZE DRAWING. IF NOT ONE INCH LONG ON THIS DRAWING, ADJUST SCALES ACCORDINGLY

RMC water and environment

REV	DATE	BY	APVD	DESCRIPTION

DESIGNED M. TAKEMOTO
DRAWN M. TAKEMOTO
CHECKED M. NAKAMOTO

SUBMITTED: MARK TAKEMOTO, RMC PROJECT ENGINEER CE-64369
APPROVED: STEVE CLARY, RMC ENGINEER CE-30318

SAUSALITO · MARIN CITY SANITARY DISTRICT

TREATMENT AND WET WEATHER FLOW UPGRADE

ODOR CONTROL SCHEMATIC

DWG NO M20
SHEET NO 123 OF 226
PROJ NO 055-006
DATE NOVEMBER 2016

FILENAME: 0055-006-M-20 11-11-16 12:12pm CTo || XREFS:| X-SMCSD-TBLK | MTakemoto-PE-stamp |<<--

Last Saved By: mtakemoto 3-14-16 10:24am

SCALE: 1"=10'

0 10 20 30

SCALE IN FEET

SAN FRANCISCO BAY

NEW BARRIER WALL

FFR MEDIA REPLACEMENT SEE M300-3

SEE DWG M300-1

NEW DISK FILTER AREA. SEE M400-1

RECYCLE PUMPS REPLACEMENT, SEE M500-1

UTILITY WATER PUMPS REPLACMENT AND SAMPLE PUMP NO. 5 RELOCATION, SEE M600-1

(E) PRIMARY CLARIFIER NO. 1

PRIMARY CLARIFIER NO. 2 M200-1

24"FA

16"FA

14"FA

PLANT LIBRARY

20"PI SEE C200-1

PRIMARY SLUDGE/SCUM PUMPS SEE M210-1

TRUCK TURNTABLE

HEADWORKS/EQ SEE M100-2 THROUGH M100-6

(N) ENERGY DISSIPATION BOX SEE C200-1

RELOCATED PG&E TRANSFORMER SEE E24-1

B M100-7 · D M100-9 · E M100-10 · F M100-11 · G M100-13 · H M100-13 · I M100-14 · J M100-15 · C M100-8 · L M100-14 · P M100-15 · N M100-16 · K M100-13 · A M100-7 · O M100-16 · M M210-2 · O M210-1

PLAN
1"=10'

NOTES:

1. SEE C200-1 FOR YARD PIPING

REGISTERED PROFESSIONAL ENGINEER — MARK W. TAKEMOTO — No. 64369 — Exp. 06-30-17 — CIVIL — STATE OF CALIFORNIA

0" 1" — VERIFY SCALES — BAR IS ONE INCH LONG ON FULL SIZE DRAWING. IF NOT ONE INCH LONG ON THIS DRAWING, ADJUST SCALES ACCORDINGLY

RMC water and environment

REV	DATE	BY	APVD	DESCRIPTION
1				
2				
3				
4				
5				

DESIGNED	M. TAKEMOTO
DRAWN	S. NGUYEN
CHECKED	M. NAKAMOTO

SUBMITTED: MARK TAKEMOTO, RMC PROJECT ENGINEER CE-64369

APPROVED: STEVE CLARY, RMC ENGINEER CE-30318

SAUSALITO · MARIN CITY SANITARY DISTRICT

TREATMENT AND WET WEATHER FLOW UPGRADE

OVERALL SITE PLAN

DWG NO M100-1
SHEET NO 124 OF 226
PROJ NO 055-006
DATE NOVEMBER 2016

FILENAME: 0055-006-M100-1 11-11-16 12:13pm Cto || XREFS: | X-SMCS0-TBLK | X-Treatment Plant Site Plan | X-SitePlan | X-Topo Survey new | X-Site | S-HEADWORKS-PLAN | 0055-006-M100-5 | MTakemoto-PE-stamp |<<--

Last Saved By: SJung 10-10-16 03:28pm

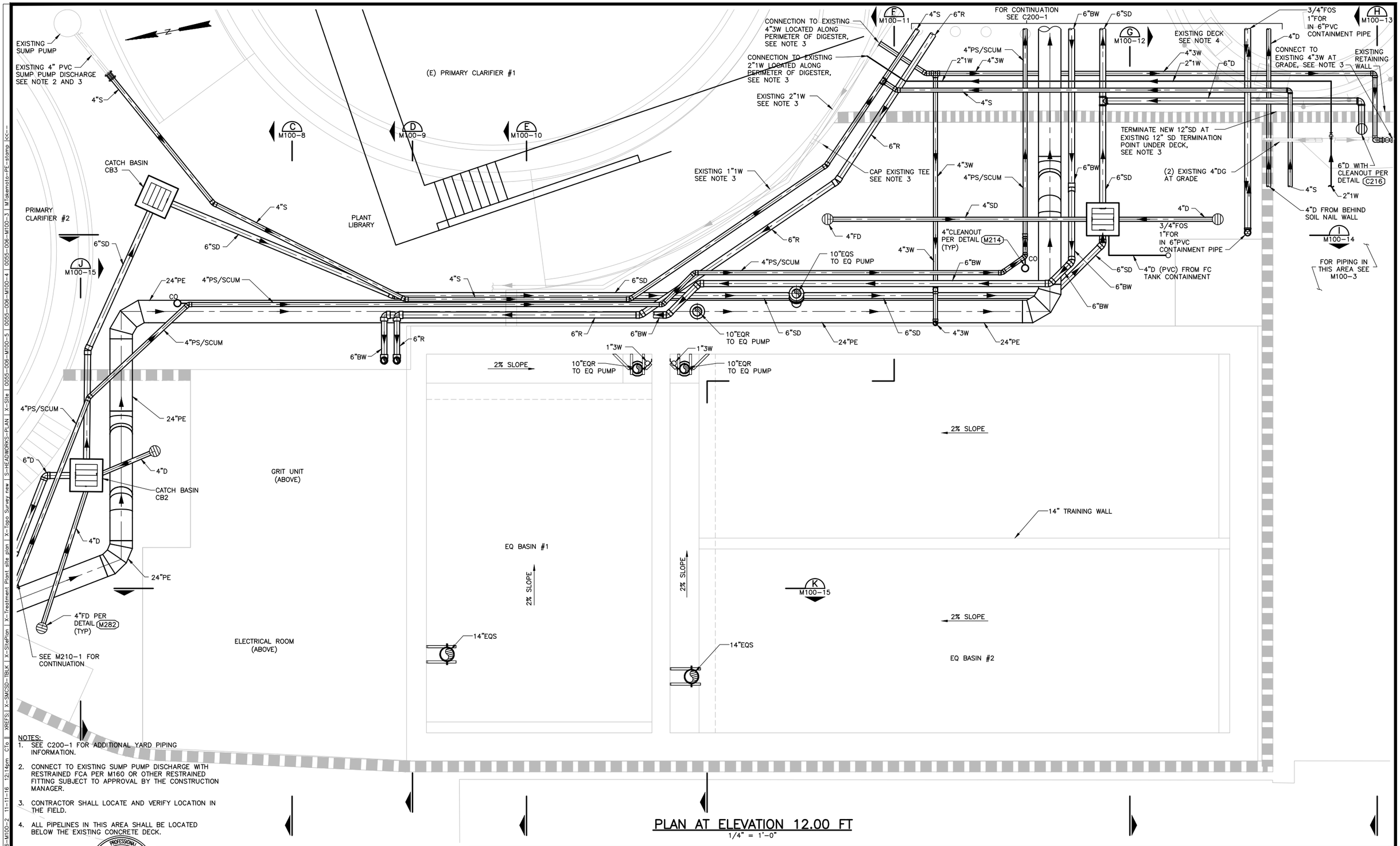

NOTES:
1. SEE C200-1 FOR ADDITIONAL YARD PIPING INFORMATION.
2. CONNECT TO EXISTING SUMP PUMP DISCHARGE WITH RESTRAINED FCA PER M160 OR OTHER RESTRAINED FITTING SUBJECT TO APPROVAL BY THE CONSTRUCTION MANAGER.
3. CONTRACTOR SHALL LOCATE AND VERIFY LOCATION IN THE FIELD.
4. ALL PIPELINES IN THIS AREA SHALL BE LOCATED BELOW THE EXISTING CONCRETE DECK.

PLAN AT ELEVATION 12.00 FT
1/4" = 1'-0"

REGISTERED PROFESSIONAL ENGINEER — MARK W. TAKEMOTO — No. 64369 — Exp. 06-30-17 — CIVIL — STATE OF CALIFORNIA

0" 1" VERIFY SCALES BAR IS ONE INCH LONG ON FULL SIZE DRAWING. IF NOT ONE INCH LONG ON THIS DRAWING, ADJUST SCALES ACCORDINGLY

REV	DATE	BY	APVD	DESCRIPTION

DESIGNED	M. TAKEMOTO
DRAWN	S. NGUYEN
CHECKED	M. NAKAMOTO

SUBMITTED: MARK TAKEMOTO, RMC PROJECT ENGINEER CE-64369
APPROVED: STEVE CLARY, RMC ENGINEER CE-30318

SAUSALITO · MARIN CITY SANITARY DISTRICT

TREATMENT AND WET WEATHER FLOW UPGRADE

HEADWORKS AND EQ BASIN FOUNDATION PLAN

DWG NO	M100-2
SHEET NO	125 OF 226
PROJ NO	055-006
DATE	NOVEMBER 2016

FILENAME: 0055-006-M100-2 | 11-11-16 12:14pm CTo | XREFS: | X-SMCSD-TBLK | X-SitePlan | X-Treatment Plant site plan | X-Topo Survey new | S-HEADWORKS-PLAN |

Last Saved By: mtakemoto 10-07-16 02:08pm

CONNECT 1/2"FC TO EXISTING SLUDGE HEAT LOOP RETURN LINE, INSTALL ISOLATION BALL VALVE AT CONNECTION.

(E) PRIMARY CLARIFIER NO. 1

PRIMARY CLARIFIER NO. 2

PLANT LIBRARY

D M100-9

E M100-10

F M100-11

G M100-12

H M100-13

FOR CONT. SEE M100-2

J M100-15

C M100-8

1/2"FC LINE IN 1 1/2" CONTAINMENT PIPE

CONNECT TO TWO (2) EXISTING 3"DG LINES

SUPPORT PER M106

3"DG

3"DG

SUPPORT PER M106

10"EQR

1/2"FC LINE IN 1 1/2" CONTAINMENT PIPE

3"DG

3"DG

10"EQR

10"EQR

EQ-PMP1

EQ-PMP2

10"CHECK VALVE (TYP.2)

3"DG

3"DG

1/2"FC LINE IN 1 1/2" CONTAINMENT PIPE

RELOCATED 1/2"FC LINE IN 1 1/2" CONTAINMENT PIPE

4"3W

4"3W UP

4"3W

4"3W

4"3W

2"3W

2"3W

SOLENOID VALVE GRT-SVLV01-01

6"BW

6"R

10"EQR

1"3W

1"3W

S

M115

10"EQR

M115

M116

10"EQR

M130 (TYP)

1"3W

HOSE BIBB AND HOSE RACK SEE DET. M275 M270

FERRIC CHLORIDE PUMP FC-PMP1

FERRIC CHLORIDE TANK FC-TNK1

GRIT PUMP HW-GRT-PMP1

1"3W

1"3W

SEE NOTE 1

1"3W

1"x1"x1/2" REDUCING TEE WITH 1/2" OPENING POINTING DOWNWARD TOWARD THE CORNER OF THE BASIN (TYP. OF 2)

F

SEE NOTE 1

4"G

L M100-17

P M100-17

VOID SPACE

1"x1/2" REDUCING ELBOW WITH 1/2" OPENING POINTING DOWNWARD TOWARD THE CORNER OF THE BASIN (TYP. OF 2)

GRIT PUMP HW-GRT-PMP2

1" HOSE BIBB AND HOSE RACK SEE DET. M275 M270

VOID SPACE

EQ BASIN #1

EQ BASIN #2

K M100-15

N M100-16

14"EQS

M116

14"EQS

M116

PRIMARY SLUDGE SCUM PUMPS SEE M210-1

ELECTRICAL ROOM (SEE E100-7)

O M100-17

4"3W

6"D

2"1W

4"S

4"D

(2) EXISTING 4" DG LINES ABOVE GRADE

(2) 3"DG

6"D WITH CLEANOUT PER DETAIL C216

1" DG DRIP TRAP (TYP. OF 2)

1"1W

FC-SHWR1-FSH-01

1"FOR 3/4"FOS

2"D (PVC)

FC-TNK1-LIT-01

GIC-01

I M100-14

EXISTING CHEMICAL RACK

FC-TNK1-LE-01

FC-LSH1-01

2"3W

3/4"FOS

1"FOR

1"1W

INSTALL PRV AND ISOLATION VALVE ON 2"1W INSIDE A PRECAST UTILITY BOX AT GRADE WITH COVER LABELED "WATER"

NEW 1/2" FC TUBING IN 1-1/2" CONTAINMENT MOUNTED TO EXISTING PIPE RACK

12"SD SEE C200-1 FOR CONT.

2"1W

4"S

CONNECT EXISTING 4"S TO NEW 4"S WITH SOLVENT WELDED FITTING

MAINTAIN SEPARATION BETWEEN 1W AND SEWER PER DETAIL C384

12"SD

NEW 1/2"FC TUBING IN 1-1/2" CONTAINMENT PIPE MOUNTED TO EXISTING PIPE RACK

CONNECT TO EXISTING 2"1W LINE

12"SD

SEW. LINE

NOTES:

1. CONTRACTOR SHALL CONNECT 3W AND G LINES IN ACCORDANCE WITH HYDRAULIC GRIT MANUFACTURER'S REQUIREMENTS.
2. CONNECT 1" D LINE TO BOTTOM OF EACH OF THE TWO (2) 3" DG LINES AT THE LOW POINT TO CONDENSATE TO BE DRAINED FROM THE LINE. ROUTE AND CONNECT EACH OF THE 1" D LINES TO A 1" DRIP TRAP LOCATED ON THE WALL NEXT TO THE STAIRS. DIRECT DRAINAGE FROM THE DRIP TRAPS TO THE NEAREST FLOOR DRAIN.

BOTTOM PLAN
1/4" = 1'-0"

REGISTERED PROFESSIONAL ENGINEER MARK W. TAKEMOTO No. 64369 Exp. 06-30-17 CIVIL STATE OF CALIFORNIA

0" 1" VERIFY SCALES BAR IS ONE INCH LONG ON FULL SIZE DRAWING. IF NOT ONE INCH LONG ON THIS DRAWING, ADJUST SCALES ACCORDINGLY

REV	DATE	BY	APVD	DESCRIPTION

DESIGNED	M. TAKEMOTO
DRAWN	S. NGUYEN
CHECKED	M. NAKAMOTO

SUBMITTED: MARK TAKEMOTO, RMC PROJECT ENGINEER CE-64369

APPROVED: STEVE CLARY, RMC ENGINEER CE-30318

SAUSALITO · MARIN CITY SANITARY DISTRICT

TREATMENT AND WET WEATHER FLOW UPGRADE

HEADWORKS AND EQ BASIN LOWER PLAN EL 25.00

DWG NO	M100-3
SHEET NO	126 OF 226
PROJ NO	055-006
DATE	NOVEMBER 2016

FILENAME: 0055-006-M100-3 | 11-11-16 12:15pm CTo | XREFS:| X-SMCSD-IBLK | X-SitePlan | X-Treatment Plant site plan | X-Topo Survey new | 0055-006-M100-4 | 0055-006-M100-2 | S-HEADWORKS-PLAN | X-Site | MTakemoto-PE-stamp |<<--

Last Saved By: mtakemoto 10-07-16 12:05pm

FILENAME: 0055-006-M100-4 11-11-16 12:15pm CTo | XREFS: | X-SMCSD-TBLK | X-SitePlan | X-Treatment Plant site plan | X-Topo Survey new | S-HEADWORKS-PLAN | 0055-006-M100-3 | 0055-006-M100-5 | MTakemoto-PE-stamp |<--

NOTES:
1. TEST PORT FOR FA BALANCING, ROUTE TO ACCESS OPENING IN PLATFORM ABOVE.
2. PROVIDE OPERATING NUT FOR DAMPER THROUGH OPENING IN PLATFORM.
3. FLOW CONTINUES UNDER THE SCREEN CHANNEL.
4. EXACT LOCATION IS UNKNOWN. CONTRACTOR SHALL LOCATE IN THE FIELD.
5. SEE M100-6 FOR ADDITIONAL DETAILS ON THE HEADWORKS AREA.

(E) PRIMARY CLARIFIER NO. 1
BUTT JOINT NEW FA TO EXISTING FA. FIELD WRAP PER FA DUCT MANUFACTURES INSTRUCTIONS
PRIMARY CLARIFIER NO.2
PLANT LIBRARY
STAIRS
DOWN
STRUCTURAL SUPPORT HAUNCHES
EQ BASIN NO.1
EQ BASIN NO.2
GRIT BASIN
GRT-EQP1
PARSHAL FLUME
HW-FLW1
SCREEN
SC-EQP1
SCREEN
SC-EQP2
EQ-PMP1
EQ-PMP2
EQ-GAT4
EQ-GAT5
EQ-GAT1
EQ-GAT2
PRIMARY INFLUENT DISTRIBUTION BOX
MANUAL BAR
SC-BAR1
SLUICE GATE SEE M250 (TYP)
STOP GATE SEE M254 SIM, (TYP)
SLIDE GATE SEE M254 (TYP)
TRANSITION STEP
20" PI TO PRIMARY CLARIFIER NO.1
TIPPING TROUGH
EQ1-TRS1
TIPPING TROUGH
EQ2-TRS1
TIPPING TROUGH
EQ2-TRS2
TROUGH CONTACT SWITCH
EQ1 TRS1-ZS-01
TROUGH CONTACT SWITCH
EQ2 TRS1-ZS-01
TROUGH CONTACT SWITCH
EQ2 TRS2-ZS-01
EQ1-LSHH-01
EQ2-LSHH-01
SUPPORT PER M125 (TYP)
SUPPORT PER M115
SUPPORT PER M115
4" MUD VALVE SC-EQP2-MVLV04-01 DETAIL M233
4" MUD VALVE SC-EQP1-MVLV04-01 DETAIL M233
4" MUD VALVE SC-BAR1-MVLV04-01 DETAIL M233
4" SEWER
MAINTAIN SEPARATION BETWEEN 1W AND SEWER PER DETAIL C384
1/2"FC LINE IN 1 1/2" CONTAINMENT PIPE
NEW 1/2"FC TUBING IN 1-1/2" CONTAINMENT PIPE MOUNTED TO EXISTING PIPE RACK
CONNECT TO EXISTING 2"1W LINE
EXISTING 2"1W, SEE NOTE 4
CATCH BASIN CB10
EXISTING CHEMICAL PULL BOX
EXISTING CHEMICAL RACK
EXISTING 4"S
SEE M100-3 FOR PIPING IN THIS AREA
12"SD SEE C200-1 FOR CONT.
NOTE 1
NOTE 2
NOTE 3
24"FA
16"FA
20"x14" REDUCER
14"FA
20"FA
12"FA
18"FA
6"FA
10"EQR
6"R
6"BW
3"3W
2"3W
4"3W
1"3W DN
2"3W 6"R
6"BW
4"G
5"FA
8"D
10"EQR
14"EQS
20"PI
2"3W
1"D
4"D
24"INF
2"3W 1"1W 1"FOR 3/4"FOS
2"1W
12"SD
M130
M132
M230
M233
M254
M115
M125
C384

PLAN AT EL 43.00
1/4" = 1'-0"

REGISTERED PROFESSIONAL ENGINEER MARK W. TAKEMOTO No. 64369 Exp. 06-30-17 CIVIL STATE OF CALIFORNIA

0" 1" — VERIFY SCALES — BAR IS ONE INCH LONG ON FULL SIZE DRAWING. IF NOT ONE INCH LONG ON THIS DRAWING, ADJUST SCALES ACCORDINGLY

RMC water and environment

REV	DATE	BY	APVD	DESCRIPTION

DESIGNED	M. TAKEMOTO
DRAWN	S. NGUYEN
CHECKED	M. NAKAMOTO

SUBMITTED: MARK TAKEMOTO, RMC PROJECT ENGINEER CE-64369
APPROVED: STEVE CLARY, RMC ENGINEER CE-30318

SAUSALITO · MARIN CITY SANITARY DISTRICT

TREATMENT AND WET WEATHER FLOW UPGRADE

HEADWORKS AND EQ BASIN PLAN AT EL 43.00

DWG NO	M100-4
SHEET NO	127 OF 226
PROJ NO	055-006
DATE	NOVEMBER 2016

Last Saved By: mtakemoto 10-07-16 11:42am

NOTES:
1. EXACT LOCATION IS UNKNOWN. CONTRACTOR SHALL LOCATE IN THE FIELD.

(E) PRIMARY CLARIFIER NO.1

PRIMARY CLARIFIER NO.2, SEE M200-1

24"FA
16"FA
14"FA
J M100-15
E M100-10
C M100-8
D M100-9
F M100-11
G M100-13
H M100-13
I M100-14
K M100-13
L M100-14
P M100-15
N M100-16
O M100-16
STAIRS
DOWN
EQ-PMP1
EQ-PMP2
CALTRANS CONCRETE BARRIER TYPE ST40
EMERGENCY EYE WASH AND SHOWER PER M259
1"1W
3/4"FOS
1"FOR
6"FA
SCREEN LCP
SC-EQP1/2-LCP-01
EDGE OF CONCRETE
GRIT WASHER LCP
GC-EQP1-LCP-01
HEADWORKS RETURN BOX
ACCESS BOX FOR FA PRESSURE TAP, M230 SIM (ACCESS BOX ONLY)
VALVE OPERATING NUT FOR FA DAMPER M230
TURNTABLE CONTROL PANEL
MHA-EQP1-LCP-01
ACCESS HATCHES WITH INTERIOR SAFETY GRATING
DIESEL STORAGE TANK
FUEL-TNK1-LSHH-01
FUEL-TNK1-LIT-01
FUEL-TNK1
FUEL-SHWR1-FSH-01
2"3W
3"3W
8"FA
DAMPER AND TEST PORT
12"FA
HOSE BIB AND RACK M270 M275
EQ1-LE-01
EQ2-LE-01
REMOVABLE BOLLARDS C942
TRUCK TURNTABLE
MHA-EQP1
MHA-EQP3
SLUDGE STORAGE BINS (NIC TYP.2)
SOLENOID VALVE
EQ2-TRS1-SVLV01-01
DAMPER AND TEST PORT
6"FA (FLEXIBLE HOSE W/ QUICK DISCONNECT)
SOLENOID VALVE
EQ2-TRS2-SVLV01-01
MHA-EQP4
MAINTAIN SEPARATION BETWEEN 1W AND SEWER PER DETAIL C384
EXISTING CHEMICAL RACK
SEE M100-3 FOR PIPING IN THIS AREA
EXISTING 4"S
2"1W
12"SD
1/2"FC LINE IN 1 1/2" CONTAINMENT PIPE MOUNTED TO EXISTING CHEMICAL RACK
CONNECT TO EXISTING 2"1W LINE
EXISTING 2"1W, SEE NOTE 1
HANDRAIL, TYP. SEE STRUCTURAL DRAWINGS
4"G
GRIT WASHER GC-EQP1
2"3W
3"FA
DAMPER AND TEST PORT
8"D
5"FA FROM BELOW
DAMPER AND TEST PORT
4"FA
SCREENINGS/GRIT DUMPSTER MHA-EQP2
REMOVABLE BOLLARDS C942
SPIRAL SCREEN SC-EQP2
2"FA DAMPER AND TEST PORT
2"FA
10"FA
DAMPER AND TEST PORT
SLUICE GATE SEE M250 (TYP)
6"FA
5"FA
1-1/2"3W
5"FA TEE DOWN
DAMPER AND TEST PORT
1-1/2"3W
6"FA
DAMPER AND TEST PORT
SCREENINGS CONVEYOR SC-CON1
MUD VALVE OPERERATING NUT M232 (TYP.3)
SOLENOID VALVE EQ1-TRS1-SVLV01-01
SPIRAL SCREEN SC-EQP1
20" PE
4"FA
2"3W
DAMPER AND TEST PORT
AUTOMATED SAMPLER
1"D
2"3W
SLIDE GATE SEE M254 (TYP)
20" PI
HOSE BIB AND RACK M270 M275
4"D
24"INF
CALTRANS CONCRETE BARRIER TYPE ST40
PRE-SLOPED TRENCH DRAIN

PLAN AT ELEVATION 44.50FT
1/4" = 1'-0"

REGISTERED PROFESSIONAL ENGINEER MARK W. TAKEMOTO No. 64369 Exp. 06-30-17 CIVIL STATE OF CALIFORNIA

0" 1" VERIFY SCALES — BAR IS ONE INCH LONG ON FULL SIZE DRAWING. IF NOT ONE INCH LONG ON THIS DRAWING, ADJUST SCALES ACCORDINGLY

RMC water and environment

REV	DATE	BY	APVD	DESCRIPTION

DESIGNED	M. TAKEMOTO
DRAWN	S. NGUYEN
CHECKED	M. NAKAMOTO

SUBMITTED: MARK TAKEMOTO, RMC PROJECT ENGINEER CE-64369
APPROVED: STEVE CLARY, RMC ENGINEER CE-30318

SAUSALITO · MARIN CITY SANITARY DISTRICT

TREATMENT AND WET WEATHER FLOW UPGRADE

HEADWORKS AND EQ BASIN TOP PLAN

DWG NO	M100-5
SHEET NO	128 OF 226
PROJ NO	055-006
DATE	NOVEMBER 2016

FILENAME: 0055-006-M100-5 11-11-16 12:16pm CTo || XREFS:| X-SMCSD-TBLK | X-SitePlan | X-Treatment Plant site plan | X-Topo Survey new | S-HEADWORKS-PLAN | 0055-006-M100-4 | X-Site | MTakemoto-PE-stamp |<<--

Last Saved By: mtakemoto 10-07-16 12:05pm

NOTES:
1. TEST PORT, ROUTE TO ACCESS OPENING IN PLATFORM ABOVE.
2. PROVIDE OPERATING NUT FOR DAMPER THROUGH OPENING IN PLATFORM.
3. FLOW CONTINUES UNDER THE SCREEN CHANNEL.

ENLARGED PLAN AT ELEVATION 43.0FT

3/8" = 1'-0"

REGISTERED PROFESSIONAL ENGINEER — MARK W. TAKEMOTO — No. 64369 — Exp. 06-30-17 — CIVIL — STATE OF CALIFORNIA

0" 1" — VERIFY SCALES — BAR IS ONE INCH LONG ON FULL SIZE DRAWING. IF NOT ONE INCH LONG ON THIS DRAWING, ADJUST SCALES ACCORDINGLY

REV	DATE	BY	APVD	DESCRIPTION

DESIGNED	M. TAKEMOTO
DRAWN	S. NGUYEN
CHECKED	M. NAKAMOTO

SUBMITTED: MARK TAKEMOTO, RMC PROJECT ENGINEER CE-64369

APPROVED: STEVE CLARY, RMC ENGINEER CE-30318

SAUSALITO · MARIN CITY SANITARY DISTRICT

TREATMENT AND WET WEATHER FLOW UPGRADE

HEADWORKS AND EQ BASIN ENLARGED PLAN AT EL 43.00

DWG NO	M100-6
SHEET NO	129 OF 226
PROJ NO	055-006
DATE	NOVEMBER 2016

FILENAME: 0055-006-M100-6 11-11-16 12:17pm CTo || XREFS: X-SMCSD-TBLK | X-SitePlan | X-Treatment Plant site plan | X-Topo Survey new | S-HEADWORKS-PLAN | M-HEADWORKS-PLAN | X-Site | 0055-006-M100-3 | 0055-006-M100-5 | 0055-006-M100-4 | MTakemoto-PE-stamp |<<--

Last Saved By: mtakemoto 3-14-16 10:22am

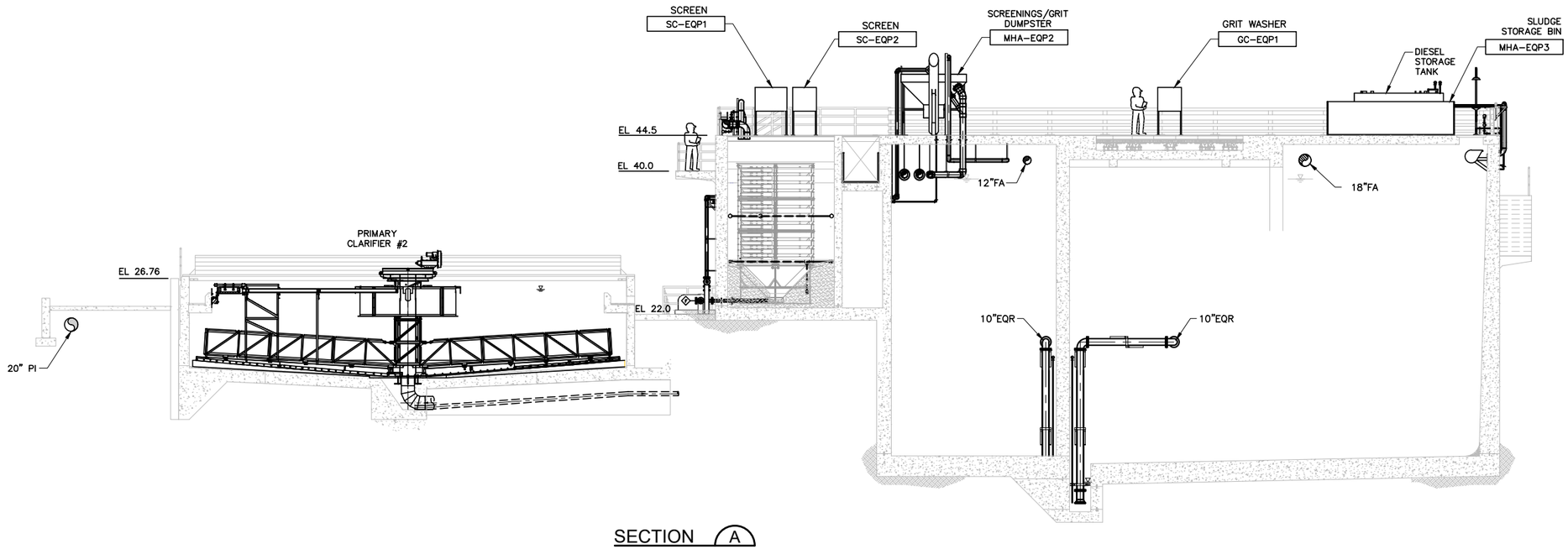

SECTION A
SCALE: 1/8"=1'-0" M100-1

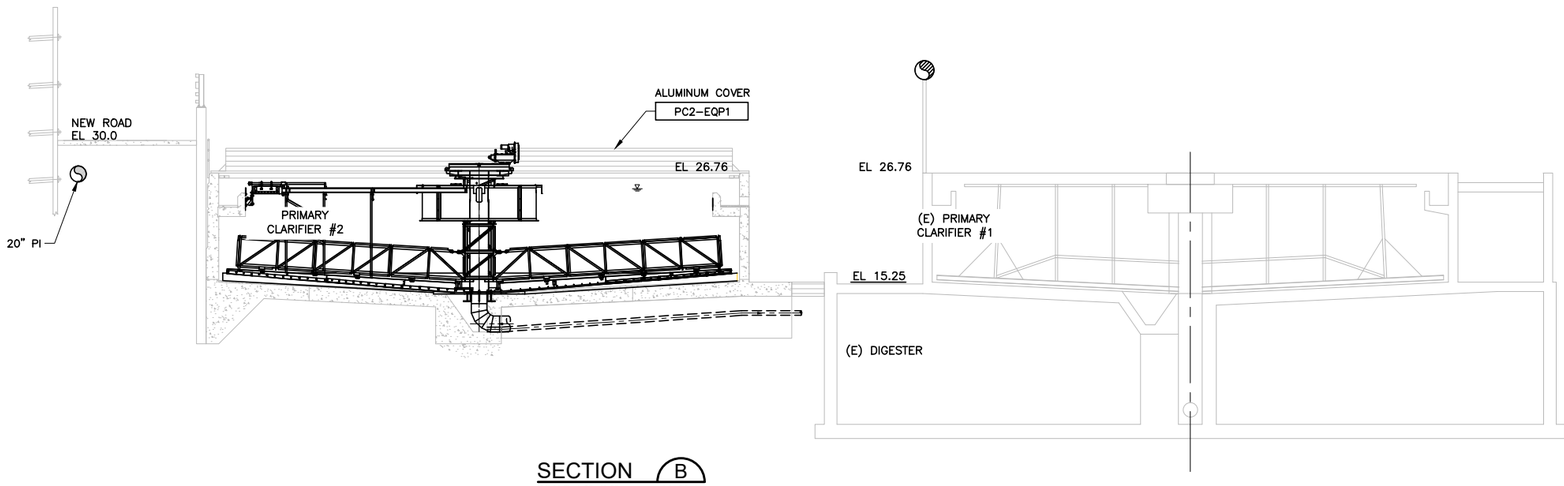

SECTION B
SCALE: 1/8"=1'-0" M100-1

NOTES:

1. NOT ALL BURIED PIPING SHOWN FOR CLARITY.

REGISTERED PROFESSIONAL ENGINEER
MARK W. TAKEMOTO
No. 64369
Exp. 06-30-17
CIVIL
STATE OF CALIFORNIA

0" 1"
VERIFY SCALES
BAR IS ONE INCH
LONG ON FULL
SIZE DRAWING.
IF NOT ONE INCH
LONG ON THIS
DRAWING, ADJUST
SCALES ACCORDINGLY

RMC water and environment

REV	DATE	BY	APVD	DESCRIPTION
1				
2				
3				
4				
5				

DESIGNED	M. TAKEMOTO
DRAWN	S. NGUYEN
CHECKED	M. NAKAMOTO

SUBMITTED: MARK TAKEMOTO, RMC PROJECT ENGINEER CE-64369
APPROVED: STEVE CLARY, RMC ENGINEER CE-30318

SAUSALITO · MARIN CITY SANITARY DISTRICT

TREATMENT AND WET WEATHER FLOW UPGRADE

HEADWORKS/PRIMARY
SECTION 1

DWG NO M100-7
SHEET NO 130 OF 226
PROJ NO 055-006
DATE NOVEMBER 2016

FILENAME: 0055-006-M100-7 11-22-16 09:20am CTo | XREFS: X-SMCSD-TBLK | X-Headworks Sections | 0055-006-M100-5 | 0055-006-M100-2 | 0055-006-M100-3 | 0055-006-M100-4 | X-SitePlan | X-Topo Survey new | S-HEADWORKS-SECT | X-Treatment Plant site plan | S-TANK-SECT | MTakemoto-PE-stamp |<<-

Last Saved By: snguyen 3-11-16 04:50pm

NOTES:
1. CONTRACTOR SHALL COORDINATE AND CONFIRM ALL EQUIPMENT DIMENSIONS, CONNECTIONS, AND INSTALLATION REQUIREMENTS.

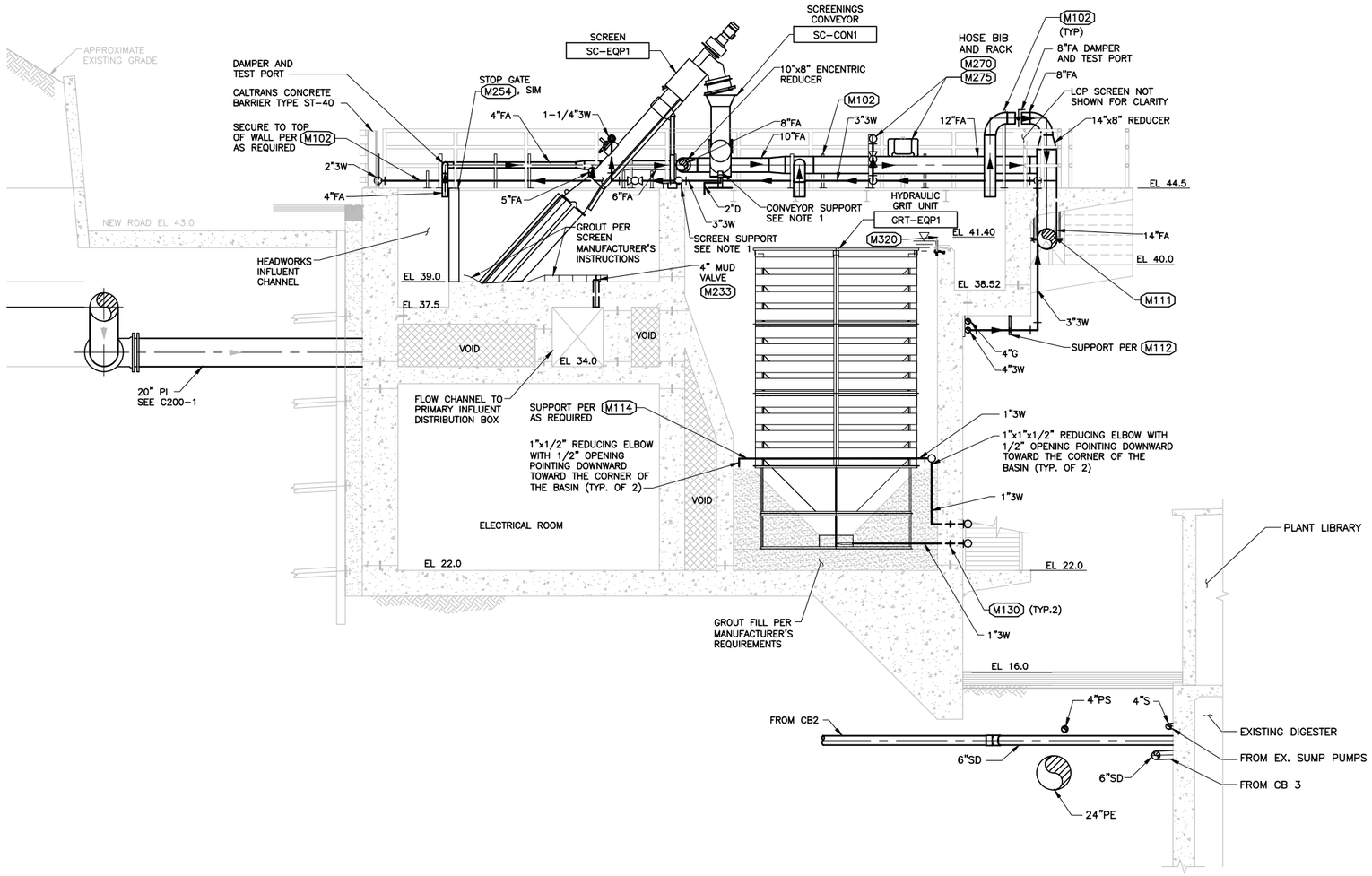

SECTION C

SCALE: 1/4"=1'-0" M100-3

REGISTERED PROFESSIONAL ENGINEER MARK W. TAKEMOTO No. 64369 Exp. 06-30-17 CIVIL STATE OF CALIFORNIA

0" 1" — VERIFY SCALES — BAR IS ONE INCH LONG ON FULL SIZE DRAWING. IF NOT ONE INCH LONG ON THIS DRAWING, ADJUST SCALES ACCORDINGLY

RMC water and environment

REV	DATE	BY	APVD	DESCRIPTION

DESIGNED M. TAKEMOTO
DRAWN S. NGUYEN
CHECKED M. NAKAMOTO

SUBMITTED: MARK TAKEMOTO, RMC PROJECT ENGINEER CE-64369
APPROVED: STEVE CLARY, RMC ENGINEER CE-30318

SAUSALITO · MARIN CITY SANITARY DISTRICT

TREATMENT AND WET WEATHER FLOW UPGRADE

HEADWORKS SECTION 1

DWG NO M100-8
SHEET NO 131 OF 226
PROJ NO 055-006
DATE NOVEMBER 2016

FILENAME: 0055-006-M100-8 11-22-16 10:10am CTo || XREFS: X-SMCSD-TBLK | X-Headworks Sections | S-HEADWORKS-SECT | 0055-006-M100-5 | X-SitePlan | X-Topo Survey new | 0055-006-M100-2 | 0055-006-M100-3 | 0055-006-M100-4 | X-Treatment Plant site plan | MTakemoto-PE-stamp |<<--

Last Saved By: CTo 11-22-16 09:27am

NOTES:
1. CONTRACTOR SHALL COORDINATE AND CONFIRM ALL EQUIPMENT DIMENSIONS, CONNECTIONS, AND INSTALLATION REQUIREMENTS.
2. PIPE SUPPORTS SHALL BE PROVIDED IN ACCORDANCE WITH SECTION 15006.
3. BURIED PIPELINES LOCATED BETWEEN THE EXISTING DIGESTER AND NEW EQ STRUCTURE SHALL BE BACKFILLED WITH CLSM.

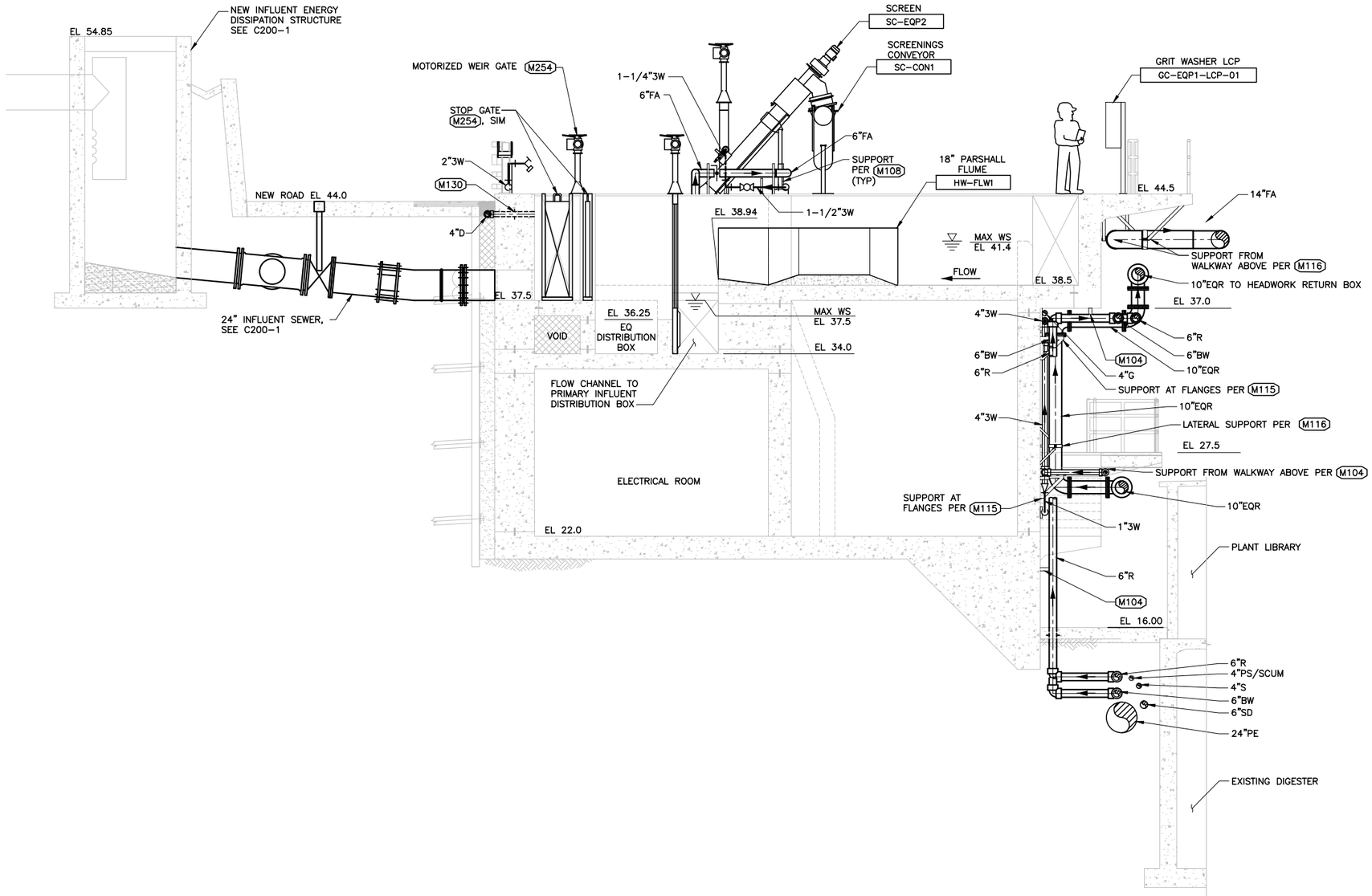

SECTION D
SCALE: 1/4"=1'-0" M100-3

REGISTERED PROFESSIONAL ENGINEER MARK W. TAKEMOTO No. 64369 Exp. 06-30-17 CIVIL STATE OF CALIFORNIA

0" 1" — VERIFY SCALES — BAR IS ONE INCH LONG ON FULL SIZE DRAWING. IF NOT ONE INCH LONG ON THIS DRAWING, ADJUST SCALES ACCORDINGLY

RMC water and environment

REV	DATE	BY	APVD	DESCRIPTION

DESIGNED	M. TAKEMOTO
DRAWN	S. NGUYEN
CHECKED	M. NAKAMOTO

SUBMITTED: MARK TAKEMOTO, RMC PROJECT ENGINEER CE-64369
APPROVED: STEVE CLARY, RMC ENGINEER CE-30318

SAUSALITO · MARIN CITY SANITARY DISTRICT

TREATMENT AND WET WEATHER FLOW UPGRADE

HEADWORKS
SECTION 2

DWG NO M100-9
SHEET NO 132 OF 226
PROJ NO 055-006
DATE NOVEMBER 2016

FILENAME: 0055-006-M100-9 11-22-16 09:59am CTo | XREFs: X-SMCSD-TBLK | S-HEADWORKS-SECT | X-Headworks Sections | 0055-006-M100-5 | 0055-006-M100-2 | 0055-006-M100-3 | 0055-006-M100-4 | X-SitePlan | X-Topo Survey new | X-Treatment Plant site plan | MTakemoto-PE-stamp |<<--

Last Saved By: CTo 11-22-16 09:31am

NOTES:
1. CONTRACTOR SHALL COORDINATE AND CONFIRM ALL EQUIPMENT DIMENSIONS, CONNECTIONS, AND INSTALLATION REQUIREMENTS.
2. PIPE SUPPORTS SHALL BE PROVIDED IN ACCORDANCE WITH SECTION 15006.
3. BURIED PIPELINES LOCATED BETWEEN THE EXISTING DIGESTER AND NEW EQ STRUCTURE SHALL BE BACKFILLED WITH CLSM.
4. CONTRACTOR SHALL PROTECT THE EXISTING DIGESTER IN PLACE AND SHALL PREVENT UNDERMINING OF THE EXISTING STRUCTURE DURING CONSTRUCTION.

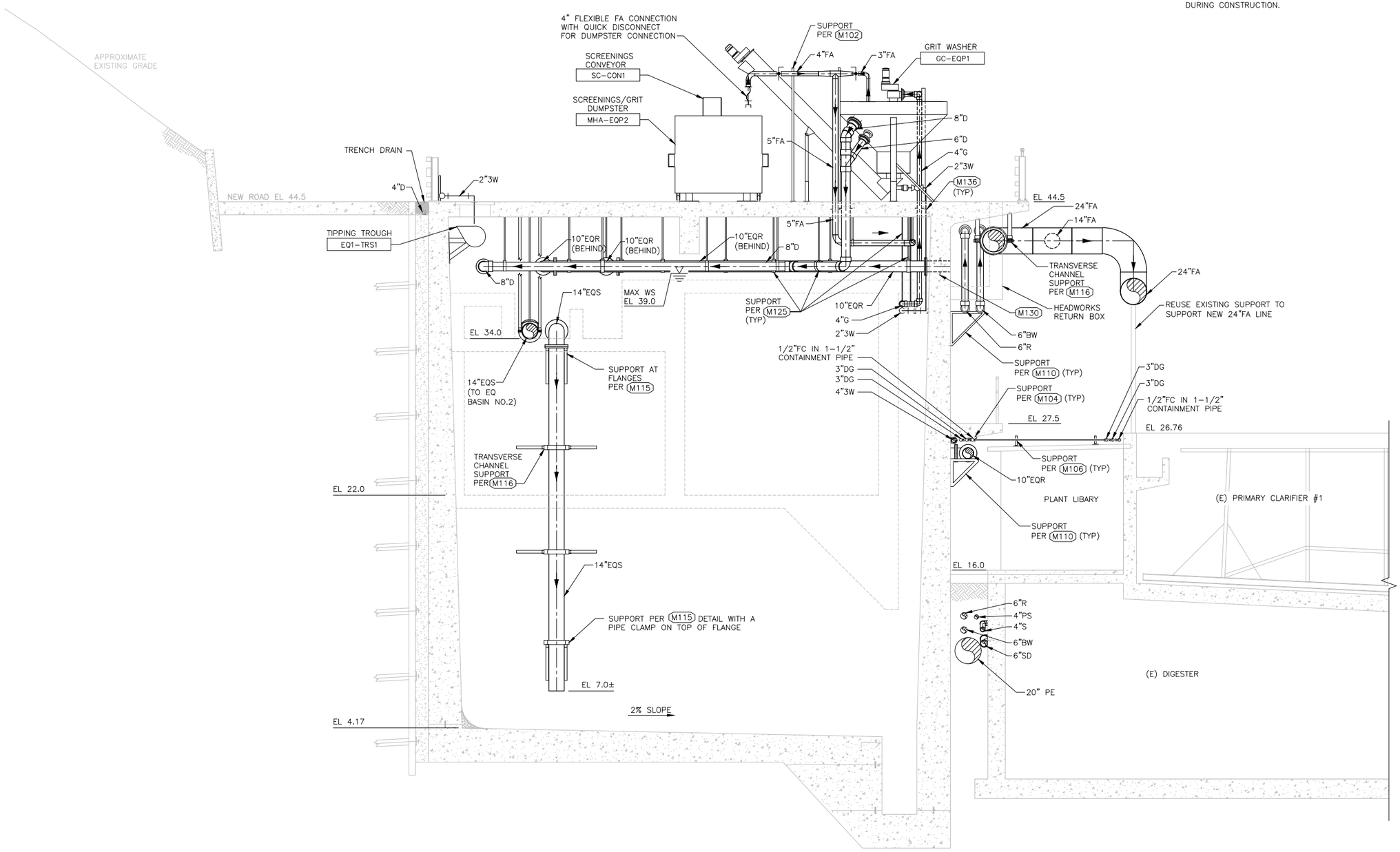

SECTION E
SCALE: 1/4"=1'-0" M100-3

REGISTERED PROFESSIONAL ENGINEER MARK W. TAKEMOTO No. 64369 Exp. 06-30-17 CIVIL STATE OF CALIFORNIA

0" 1" VERIFY SCALES BAR IS ONE INCH LONG ON FULL SIZE DRAWING. IF NOT ONE INCH LONG ON THIS DRAWING, ADJUST SCALES ACCORDINGLY

RMC water and environment

REV	DATE	BY	APVD	DESCRIPTION
1				
2				
3				
4				
5				

DESIGNED	M. TAKEMOTO
DRAWN	S. NGUYEN
CHECKED	M. NAKAMOTO

SUBMITTED: MARK TAKEMOTO, RMC PROJECT ENGINEER CE-64369
APPROVED: STEVE CLARY, RMC ENGINEER CE-30318

SAUSALITO · MARIN CITY SANITARY DISTRICT

TREATMENT AND WET WEATHER FLOW UPGRADE

HEADWORKS SECTION 3

DWG NO M100-10
SHEET NO 133 OF 226
PROJ NO 055-006
DATE NOVEMBER 2016

FILENAME: 0055-006-M100-10 11-22-16 09:36am CTo | XREFS: X-SMCSD-TBLK | X-Headworks Sections | 0055-006-M100-5 | 0055-006-M100-2 | 0055-006-M100-3 | 0055-006-M100-4 | X-SitePlan | X-Topo Survey new | S-HEADWORKS-SECT | S-HEADWORKS-PLAN | X-Site | X-Treatment Plant site plan | Mtakemotc

Last Saved By: mtakemoto 3-14-16 12:37pm

NOTES:
1. CONTRACTOR SHALL COORDINATE AND CONFIRM ALL EQUIPMENT DIMENSIONS, CONNECTIONS, AND INSTALLATION REQUIREMENTS.
2. AIR RELEASE VALVES SHALL BE PROVIDE AND INSTALLED IN ACCORDANCE WITH THE PUMP MANUFACTURER'S REQUIREMENTS.

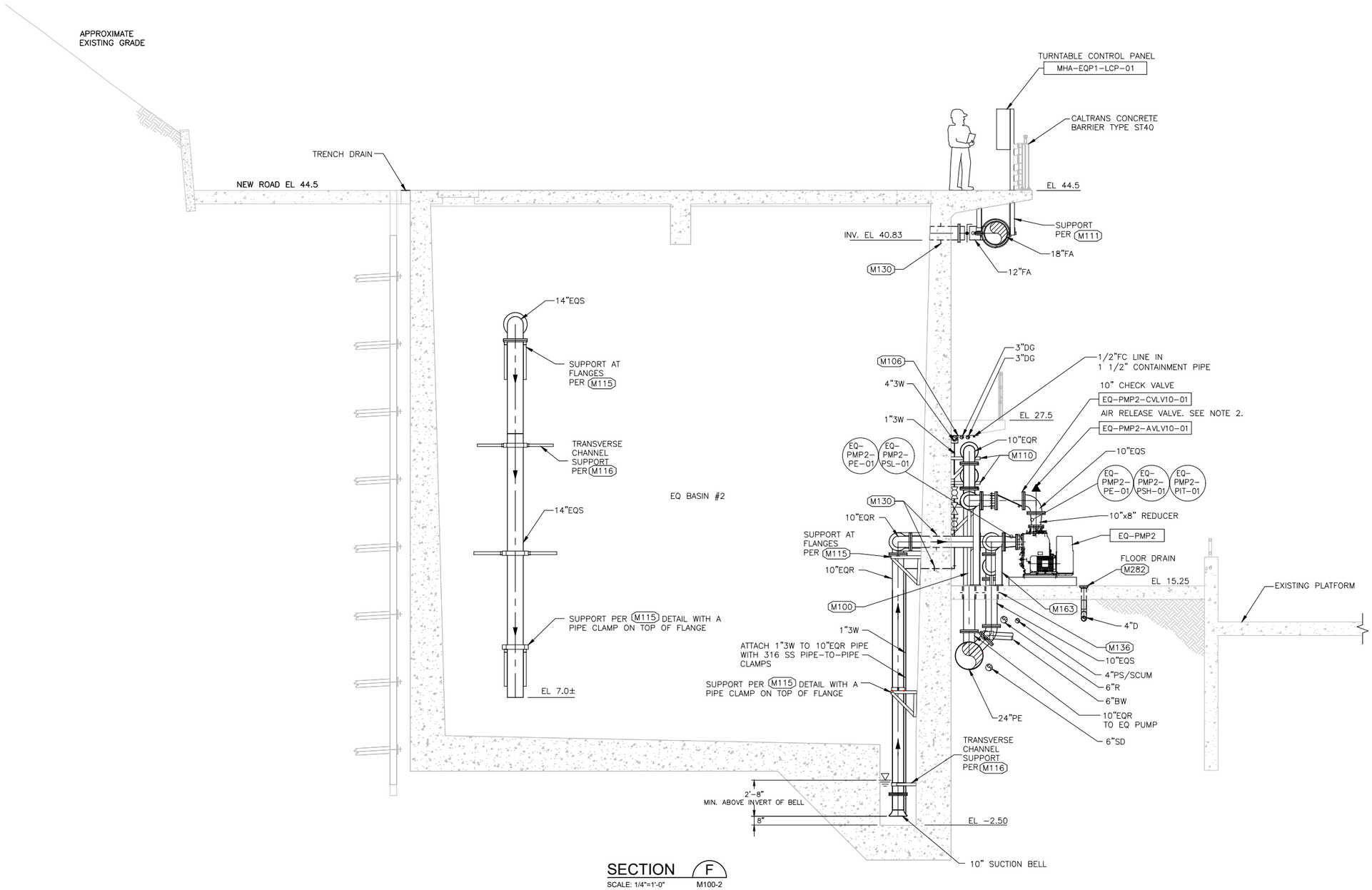

SECTION F
SCALE: 1/4"=1'-0" M100-2

REGISTERED PROFESSIONAL ENGINEER MARK W. TAKEMOTO No. 64369 Exp. 06-30-17 CIVIL STATE OF CALIFORNIA

0" 1" — VERIFY SCALES — BAR IS ONE INCH LONG ON FULL SIZE DRAWING. IF NOT ONE INCH LONG ON THIS DRAWING, ADJUST SCALES ACCORDINGLY

RMC water and environment

REV	DATE	BY	APVD	DESCRIPTION

DESIGNED M. TAKEMOTO
DRAWN S. NGUYEN
CHECKED M. NAKAMOTO

SUBMITTED: MARK TAKEMOTO, RMC PROJECT ENGINEER CE-64369
APPROVED: STEVE CLARY, RMC ENGINEER CE-30318

SAUSALITO · MARIN CITY SANITARY DISTRICT

TREATMENT AND WET WEATHER FLOW UPGRADE

HEADWORKS
SECTION 4

DWG NO M100-11
SHEET NO 134 OF 226
PROJ NO 055-006
DATE NOVEMBER 2016

FILENAME: 0055-006-M100-11 11-22-16 09:39am CTo || XREFS: | X-SMCSD-TBLK | X-Headworks Sections | 0055-006-M100-5 | 0055-006-M100-2 | 0055-006-M100-3 | 0055-006-M100-4 | X-SitePlan | X-Topo Survey new | S-HEADWORKS-PLAN | S-HEADWORKS-SECT | X-Treatment Plant site plan | MTakemoto-PE-stamp

Last Saved By: mtakemoto 3-14-16 12:37pm

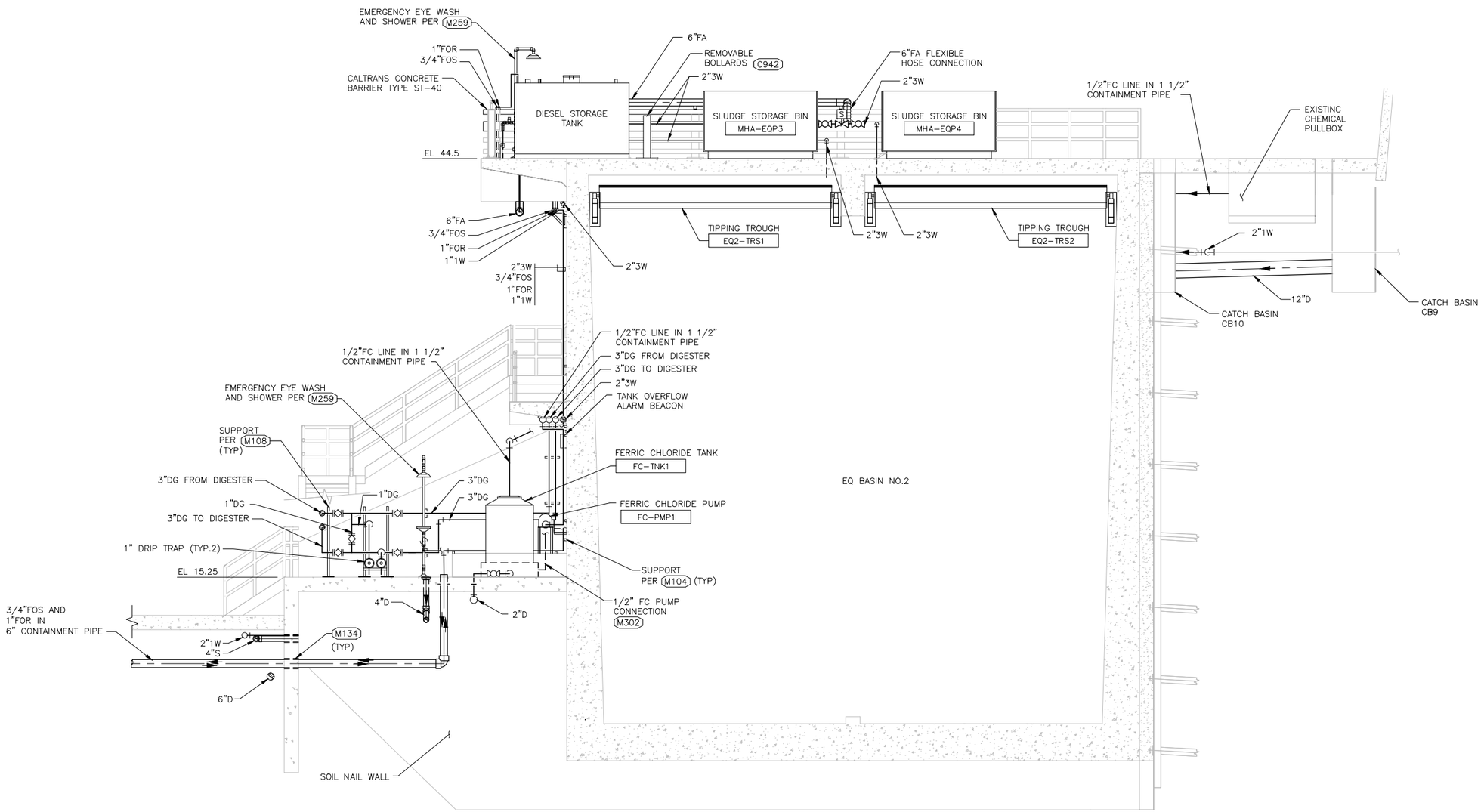

SECTION G

SCALE: 1/4"=1'-0" M100-2

REGISTERED PROFESSIONAL ENGINEER — MARK W. TAKEMOTO — No. 64369 Exp. 06-30-17 CIVIL — STATE OF CALIFORNIA

0" 1" — VERIFY SCALES — BAR IS ONE INCH LONG ON FULL SIZE DRAWING. IF NOT ONE INCH LONG ON THIS DRAWING, ADJUST SCALES ACCORDINGLY

RMC water and environment

REV	DATE	BY	APVD	DESCRIPTION
1				
2				
3				
4				
5				

DESIGNED	M. TAKEMOTO
DRAWN	S. NGUYEN
CHECKED	M. NAKAMOTO

SUBMITTED: MARK TAKEMOTO, RMC PROJECT ENGINEER CE-64369

APPROVED: STEVE CLARY, RMC ENGINEER CE-30318

SAUSALITO · MARIN CITY SANITARY DISTRICT

TREATMENT AND WET WEATHER FLOW UPGRADE

HEADWORKS
SECTION 5

DWG NO M100-12
SHEET NO 135 OF 226
PROJ NO 055-006
DATE NOVEMBER 2016

FILENAME: 0055-006-M100-12 11-22-16 09:41am CTo | XREFs: X-SMCSD-TBLK | X-Headworks Sections | 0055-006-M100-5 | 0055-006-M100-2 | 0055-006-M100-3 | 0055-006-M100-4 | X-SitePlan | X-Topo Survey new | S-HEADWORKS-PLAN | S-HEADWORKS-SECT | X-Treatment Plant site plan | MTakemoto-PE-stamp

Last Saved By: mtakemoto 3-14-16 01:41pm

NOTES:
1. CONTRACTOR SHALL VERIFY LOCATION IN FIELD.
2. CONTRACTOR SHALL COORDINATE PIPE LOCATION AND ALIGNMENT WITH EXISTING UTILITIES AND THE SOIL NAIL WALL TO AVOID ANY CONFLICTS.

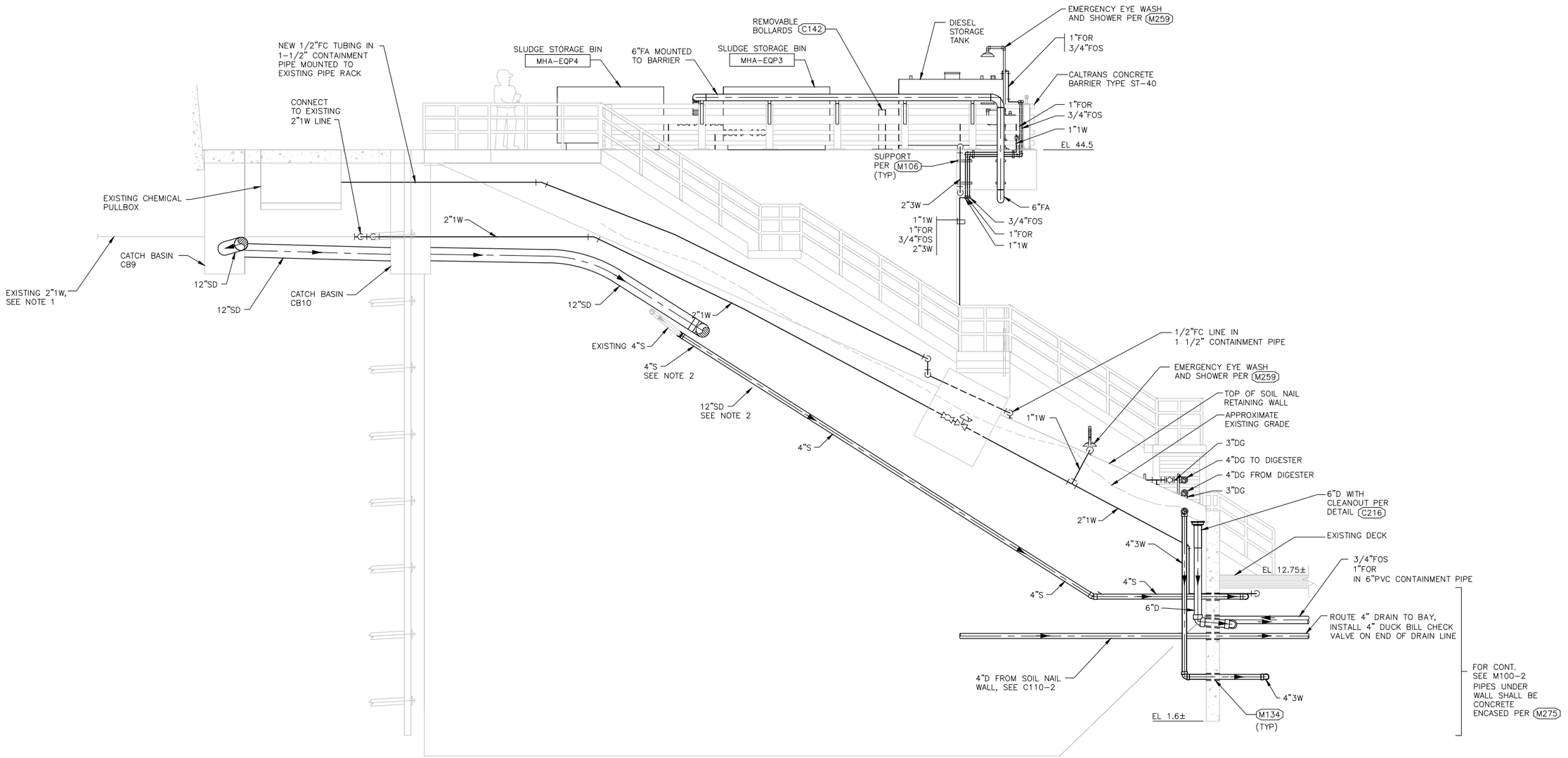

SECTION H
SCALE: 1/4"=1'-0" M100-2

REGISTERED PROFESSIONAL ENGINEER MARK W. TAKEMOTO No. 64369 Exp. 06-30-17 CIVIL STATE OF CALIFORNIA

0" 1" VERIFY SCALES — BAR IS ONE INCH LONG ON FULL SIZE DRAWING. IF NOT ONE INCH LONG ON THIS DRAWING, ADJUST SCALES ACCORDINGLY

RMC water and environment

REV	DATE	BY	APVD	DESCRIPTION

DESIGNED	M. TAKEMOTO
DRAWN	S. NGUYEN
CHECKED	M. NAKAMOTO

SUBMITTED: MARK TAKEMOTO, RMC PROJECT ENGINEER CE-64369
APPROVED: STEVE CLARY, RMC ENGINEER CE-30318

SAUSALITO · MARIN CITY SANITARY DISTRICT

TREATMENT AND WET WEATHER FLOW UPGRADE

HEADWORKS
SECTION 6

DWG NO M100-13
SHEET NO 136 OF 226
PROJ NO 055-006
DATE NOVEMBER 2016

FILENAME: 0055-006-M100-13 | 11-22-16 09:44am | CTo | XREFs: | X-SMCSD-TBLK | X-Headworks Sections | 0055-006-M100-5 | 0055-006-M100-2 | 0055-006-M100-3 | 0055-006-M100-4 | X-SitePlan | X-Topo Survey new | S-HEADWORKS-SECT | SPC Topo Rev#041813 | Structural | X-Treatment Plant site plan | MTaker

Last Saved By: CTo 11-22-16 09:42am

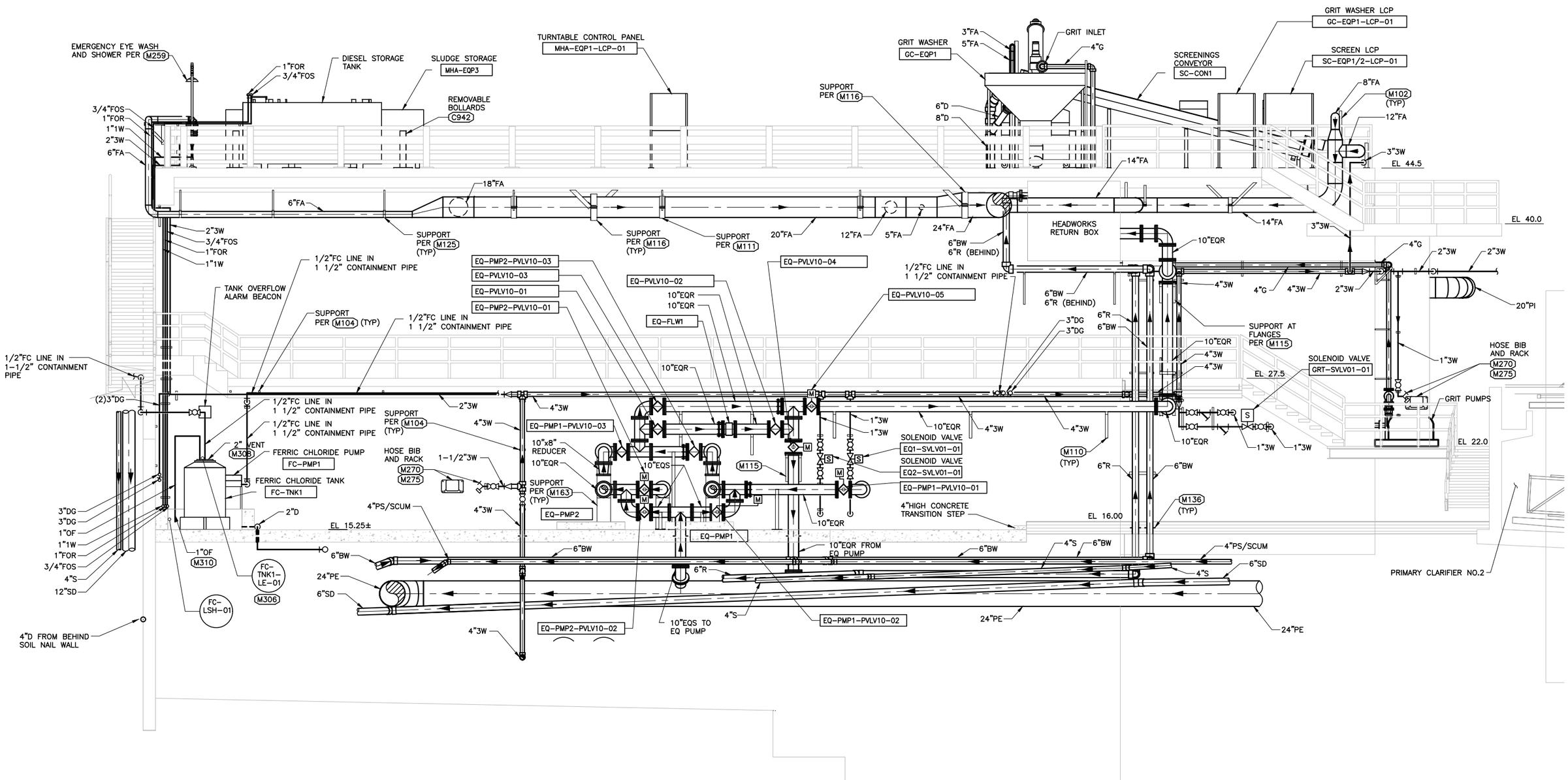

SECTION 1 M100-1
SCALE: 1/4"=1'-0"

0" 1"
VERIFY SCALES
BAR IS ONE INCH LONG ON FULL SIZE DRAWING. IF NOT ONE INCH LONG ON THIS DRAWING, ADJUST SCALES ACCORDINGLY

REGISTERED PROFESSIONAL ENGINEER MARK W. TAKEMOTO No. 64369 Exp. 06-30-17 CIVIL STATE OF CALIFORNIA

RMC water and environment

REV	DATE	BY	APVD	DESCRIPTION

DESIGNED M. TAKEMOTO
DRAWN S. NGUYEN
CHECKED M. NAKAMOTO

SUBMITTED: MARK TAKEMOTO
RMC PROJECT ENGINEER CE-64369
APPROVED: STEVE CLARY
RMC ENGINEER CE-30318

SAUSALITO · MARIN CITY SANITARY DISTRICT

TREATMENT AND WET WEATHER FLOW UPGRADE

HEADWORKS
SECTION 7

DWG NO M100-14
SHEET NO 137 OF 226
PROJ NO 055-006
DATE NOVEMBER 2016

FILENAME: 0055-006-M100-14 11-22-16 09:57am CTo XREFS: X-SMCSD-TBLK X-Headworks Sections 0055-006-M100-5 0055-006-M100-2 0055-006-M100-3 0055-006-M100-4 X-SitePlan X-Topo Survey new S-HEADWORKS-SECT X-Treatment Plant site plan MTakemoto-PE-stamp

Last Saved By: CTo 11-22-16 09:44am

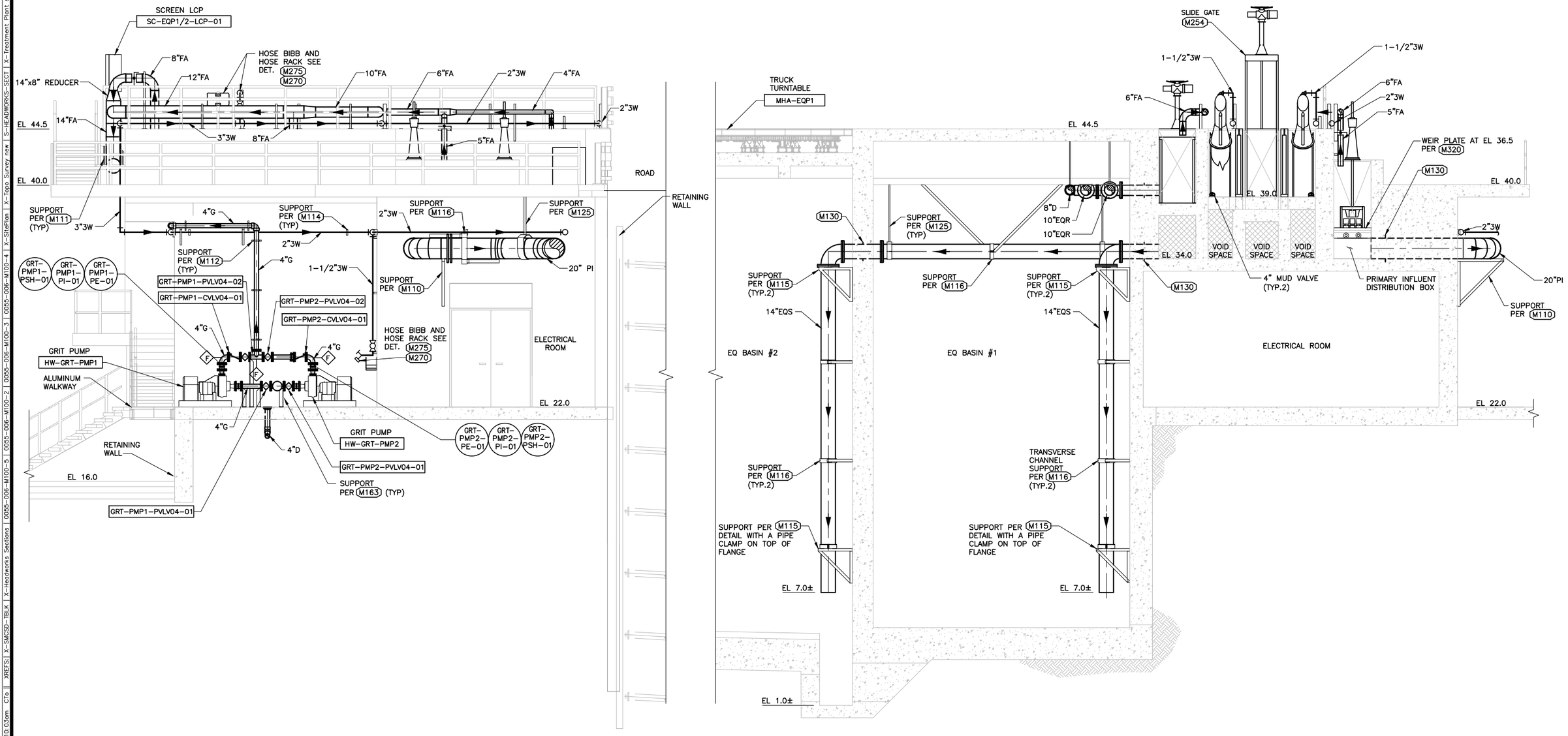

SECTION J
SCALE: 1/4"=1'-0" M100-3

SECTION K
SCALE: 1/4"=1'-0" M100-3

REGISTERED PROFESSIONAL ENGINEER MARK W. TAKEMOTO No. 64369 Exp. 06-30-17 CIVIL STATE OF CALIFORNIA

0" 1" — VERIFY SCALES — BAR IS ONE INCH LONG ON FULL SIZE DRAWING. IF NOT ONE INCH LONG ON THIS DRAWING, ADJUST SCALES ACCORDINGLY

RMC water and environment

REV	DATE	BY	APVD	DESCRIPTION

DESIGNED	M. TAKEMOTO
DRAWN	S. NGUYEN
CHECKED	M. NAKAMOTO

SUBMITTED: MARK TAKEMOTO, RMC PROJECT ENGINEER CE-64369

APPROVED: STEVE CLARY, RMC ENGINEER CE-30318

SAUSALITO · MARIN CITY SANITARY DISTRICT

TREATMENT AND WET WEATHER FLOW UPGRADE

HEADWORKS SECTION 8

DWG NO	M100-15
SHEET NO	138 OF 226
PROJ NO	055-006
DATE	NOVEMBER 2016

FILENAME: 0055-006-M100-15 | 11-22-16 | 10:03am | CTo | XREFS: | X-SMCSD-TBLK | X-Headworks Sections | 0055-006-M100-5 | 0055-006-M100-4 | X-SitePlan | X-Topo Survey new | S-HEADWORKS-SECT | X-Treatment Plant site plan | MTakemoto-PE-stamp |<<--

Last Saved By: snguyen 3-11-16 04:49pm

NOTES:
1. CONTRACTOR SHALL BE RESPONSIBLE FOR COORDINATING DIMENSION, CONNECTIONS AND ALL OTHER REQUIREMENTS TO ENSURE PROPER INSTALLATION AND OPERATION AMONGST ALL EQUIPMENT.

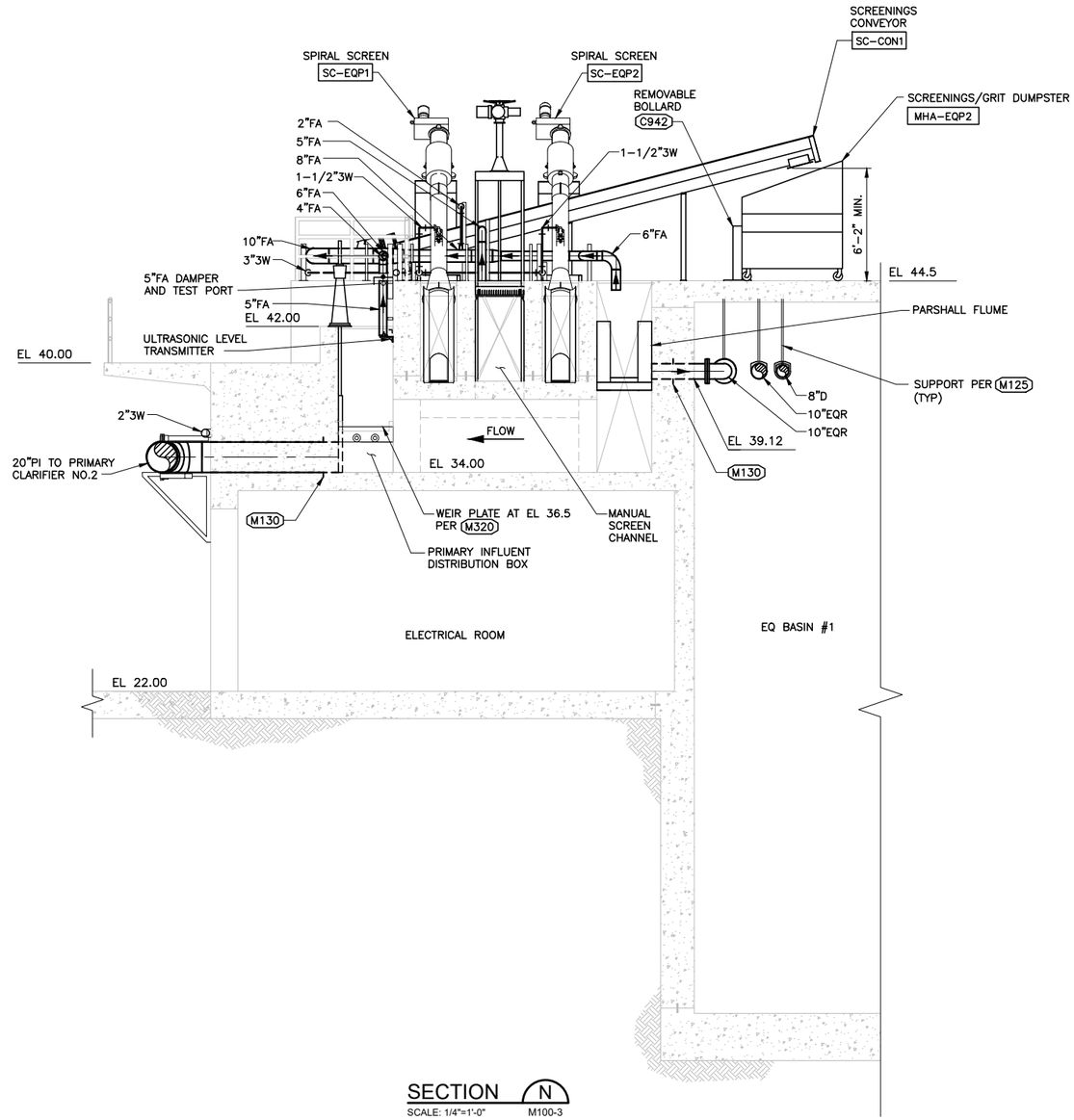

SECTION N
SCALE: 1/4"=1'-0" M100-3

REGISTERED PROFESSIONAL ENGINEER MARK W. TAKEMOTO No. 64369 Exp. 06-30-17 CIVIL STATE OF CALIFORNIA

0" 1" VERIFY SCALES BAR IS ONE INCH LONG ON FULL SIZE DRAWING. IF NOT ONE INCH LONG ON THIS DRAWING, ADJUST SCALES ACCORDINGLY

RMC water and environment

REV	DATE	BY	APVD	DESCRIPTION
1				
2				
3				
4				
5				

DESIGNED	M. TAKEMOTO
DRAWN	S. NGUYEN
CHECKED	M. NAKAMOTO

SUBMITTED: MARK TAKEMOTO, RMC PROJECT ENGINEER CE-64369
APPROVED: STEVE CLARY, RMC ENGINEER CE-30318

SAUSALITO · MARIN CITY SANITARY DISTRICT

TREATMENT AND WET WEATHER FLOW UPGRADE

HEADWORKS
SECTION 9

DWG NO M100-16
SHEET NO 139 OF 226
PROJ NO 055-006
DATE NOVEMBER 2016

FILENAME: 0055-006-M100-16 11-22-16 09:50am CTo || XREFS: X-SMCSD-TBLK | X-Headworks Sections | 0055-006-M100-5 | 0055-006-M100-2 | 0055-006-M100-3 | 0055-006-M100-4 | X-SitePlan | X-Topo Survey new | S-HEADWORKS-SECT | S-HEADWORKS-PLAN | X-Treatment Plant site plan | MTakemoto-PE-stamp

Last Saved By: mtakemoto 3-14-16 12:39pm

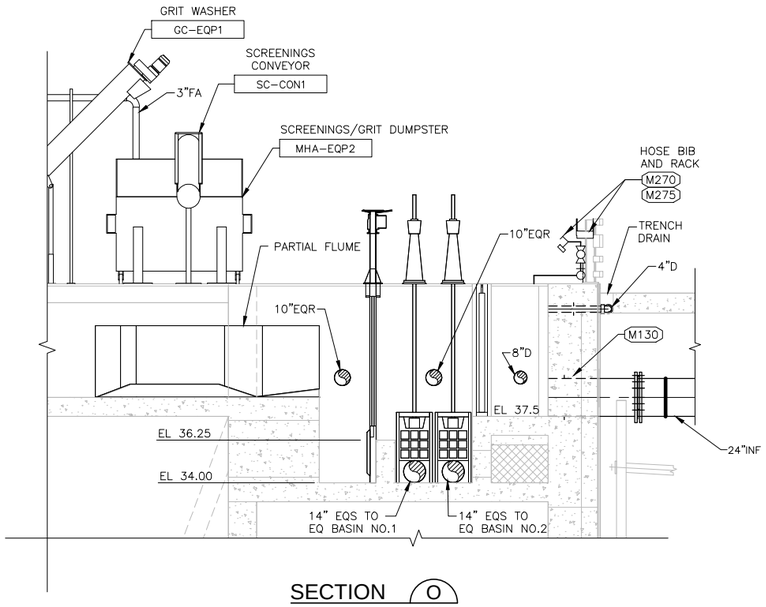

SECTION O

SCALE: 1/4"=1'-0" M100-4

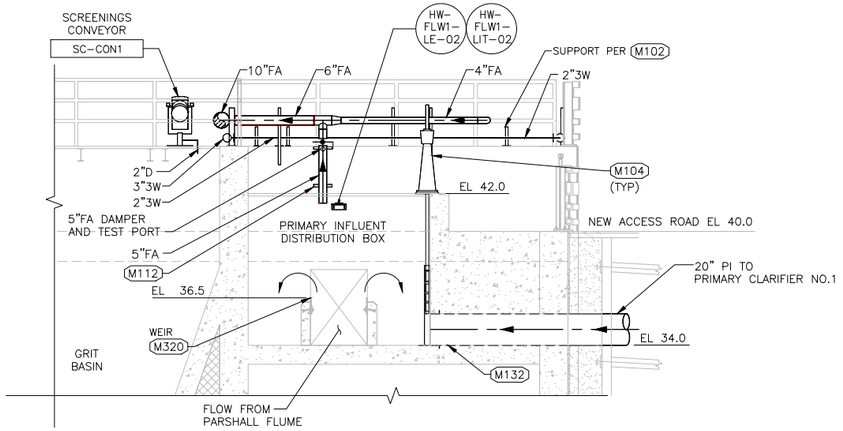

SECTION L

SCALE: 1/4"=1'-0" M100-4

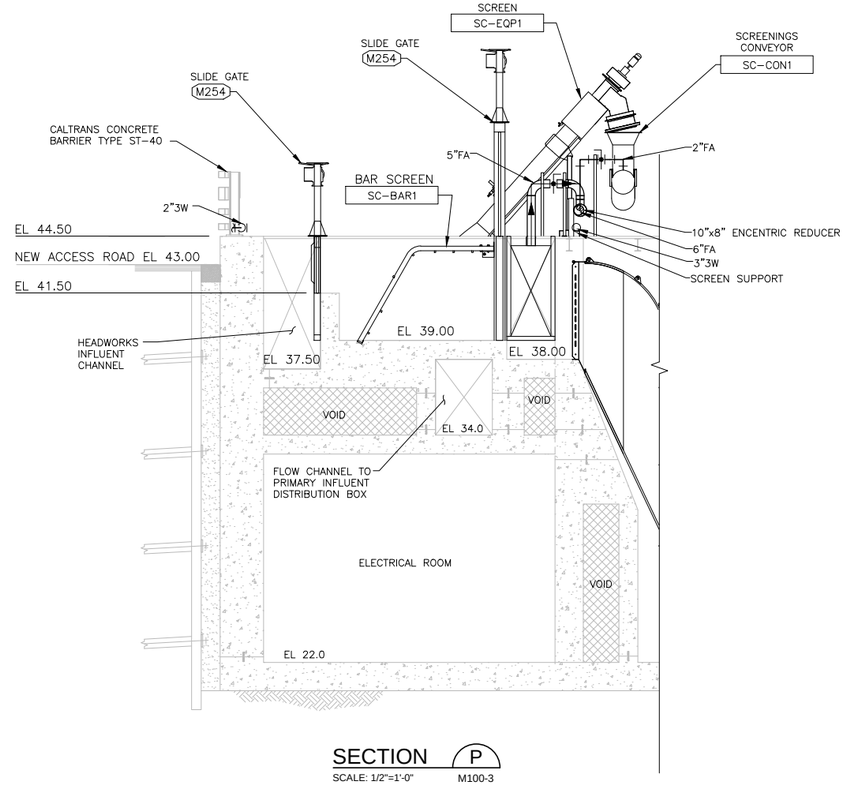

SECTION P

SCALE: 1/2"=1'-0" M100-3

REGISTERED PROFESSIONAL ENGINEER
MARK W. TAKEMOTO
No. 64369
Exp. 06-30-17
CIVIL
STATE OF CALIFORNIA

0" 1"
VERIFY SCALES
BAR IS ONE INCH LONG ON FULL SIZE DRAWING. IF NOT ONE INCH LONG ON THIS DRAWING, ADJUST SCALES ACCORDINGLY

RMC water and environment

REV	DATE	BY	APVD	DESCRIPTION
1				
2				
3				
4				
5				

DESIGNED	M. TAKEMOTO
DRAWN	S. NGUYEN
CHECKED	M. NAKAMOTO

SUBMITTED: MARK TAKEMOTO, RMC PROJECT ENGINEER CE-64369

APPROVED: STEVE CLARY, RMC ENGINEER CE-30318

SAUSALITO · MARIN CITY SANITARY DISTRICT

TREATMENT AND WET WEATHER FLOW UPGRADE

HEADWORKS
SECTION 10

DWG NO M100-17
SHEET NO 140 OF 226
PROJ NO 055-006
DATE NOVEMBER 2016

FILENAME: 0055-006-M100-17 11-22-16 02:00pm CTo || XREFs: X-SMCSD-TBLK | 0055-006-M100-5 | 0055-006-M100-4 | X-SitePlan | X-Topo Survey new | S-HEADWORKS-PLAN | S-HEADWORKS-SECT | X-Headworks Sections | X-Treatment Plant site plan | MTakemoto-PE-stamp | 0055-006-M100-3 | 0055-006-M100-2 | 0055-006-M100-1

Last Saved By: CTo 11-22-16 09:53am

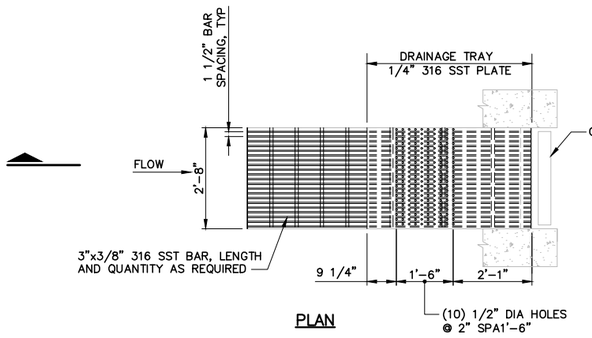

PLAN

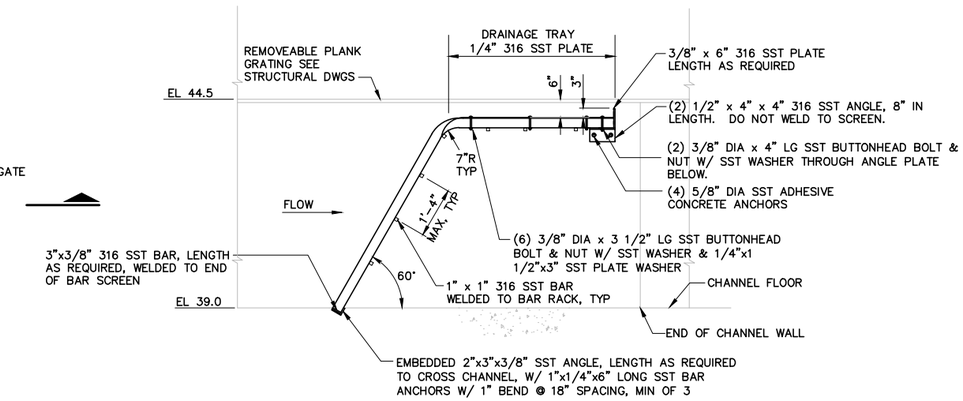

SECTION

NOTES:

1. ALL BAR SCREEN PARTS SHALL BE 316 SST.
2. FURNISH (1) ALUMINUM RAKE FOR USE WITH BAR SCREEN.

MANUAL BAR SCREEN 1

1"=1'-0"

FILENAME: 0055-006-M100-18 11-22-16 09:53am CTo || XREFS: | X-SMCSD-TBLK | MTakemoto-PE-stamp |<<--

REGISTERED PROFESSIONAL ENGINEER MARK W. TAKEMOTO No. 64369 Exp. 06-30-17 CIVIL STATE OF CALIFORNIA

0" — 1" VERIFY SCALES BAR IS ONE INCH LONG ON FULL SIZE DRAWING. IF NOT ONE INCH LONG ON THIS DRAWING, ADJUST SCALES ACCORDINGLY

RMC water and environment

REV	DATE	BY	APVD	DESCRIPTION
1				
2				
3				
4				
5				

DESIGNED M. TAKEMOTO
DRAWN S. JUNG
CHECKED M. NAKAMOTO

SUBMITTED: MARK TAKEMOTO, RMC PROJECT ENGINEER CE-64369
APPROVED: STEVE CLARY, RMC ENGINEER CE-30318

SAUSALITO · MARIN CITY SANITARY DISTRICT

TREATMENT AND WET WEATHER FLOW UPGRADE

HEADWORKS DETAILS

DWG NO M100-18
SHEET NO 141 OF 226
PROJ NO 055-006
DATE NOVEMBER 2016

Last Saved By: CTo 11-22-16 09:51am

NOTES:
1. THE VIEW SHOWN IS FOR ILLUSTRATIVE PURPOSES ONLY. SEE M100-1.

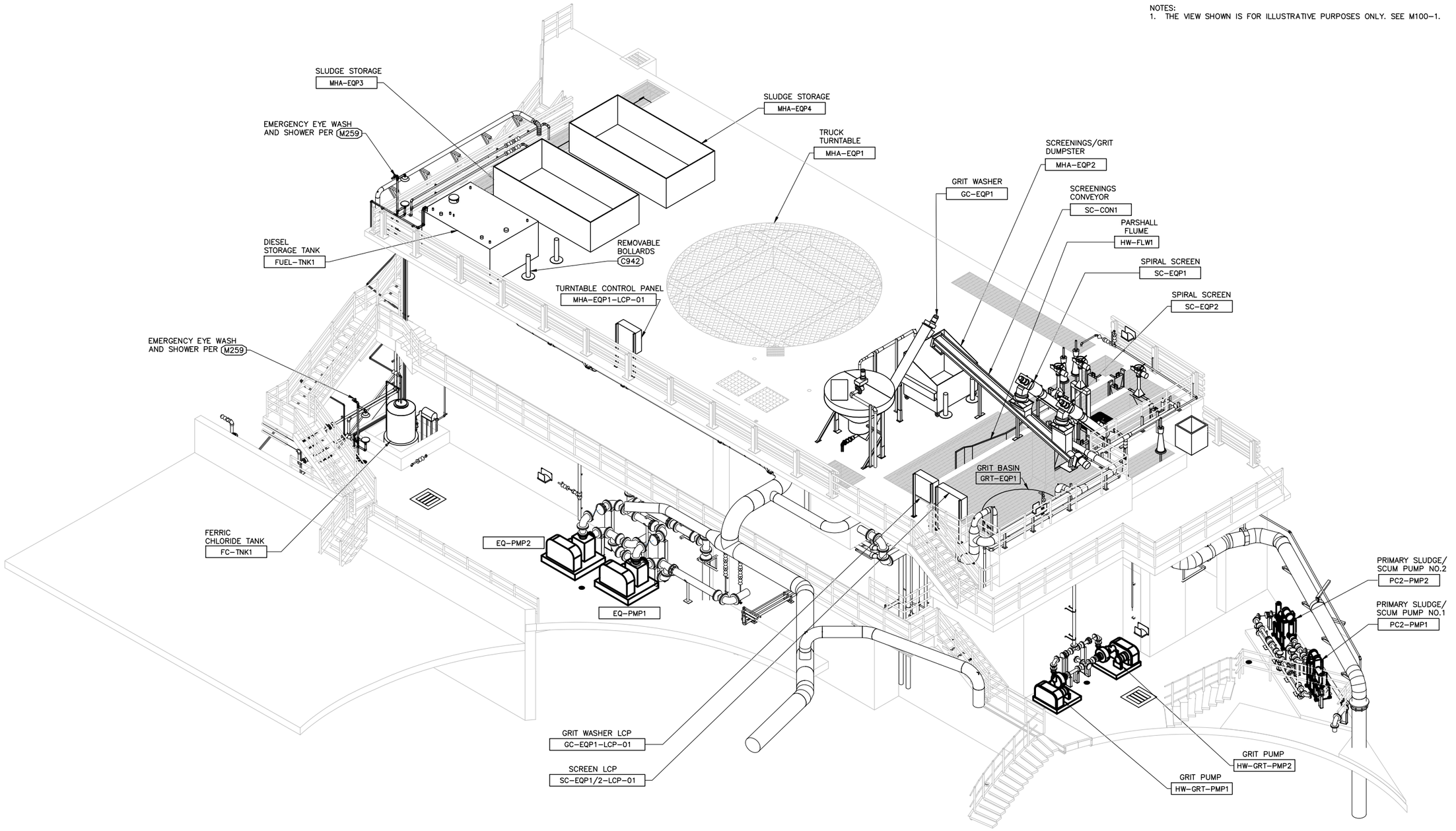

HEADWORKS/EQ STRUCTURE

SCALE: NTS

REGISTERED PROFESSIONAL ENGINEER — MARK W. TAKEMOTO — No. 64369 — Exp. 06-30-17 — CIVIL — STATE OF CALIFORNIA

0" 1" — VERIFY SCALES — BAR IS ONE INCH LONG ON FULL SIZE DRAWING. IF NOT ONE INCH LONG ON THIS DRAWING, ADJUST SCALES ACCORDINGLY

RMC water and environment

REV	DATE	BY	APVD	DESCRIPTION
1				
2				
3				
4				
5				

DESIGNED	M. TAKEMOTO
DRAWN	S. NGUYEN
CHECKED	M. NAKMOTO

SUBMITTED: MARK TAKEMOTO — RMC PROJECT ENGINEER CE-64369

APPROVED: STEVE CLARY — RMC ENGINEER CE-30318

SAUSALITO · MARIN CITY SANITARY DISTRICT

45

TREATMENT AND WET WEATHER FLOW UPGRADE

ILLUSTRATIVE ISOMETRIC VIEWS - 1

DWG NO	M110-1
SHEET NO	142 OF 226
PROJ NO	055-006
DATE	NOVEMBER 2016

FILENAME: 0055-006-M110-1 11-11-16 12:29pm CTo || XREFS: X-SMCSD-TBLK | MTakemoto-PE-stamp |<<--

Last Saved By: mtakemoto 3-14-16 08:30am

NOTES:
1. THE VIEW SHOWN IS FOR ILLUSTRATIVE PURPOSES ONLY. SEE M100-14.

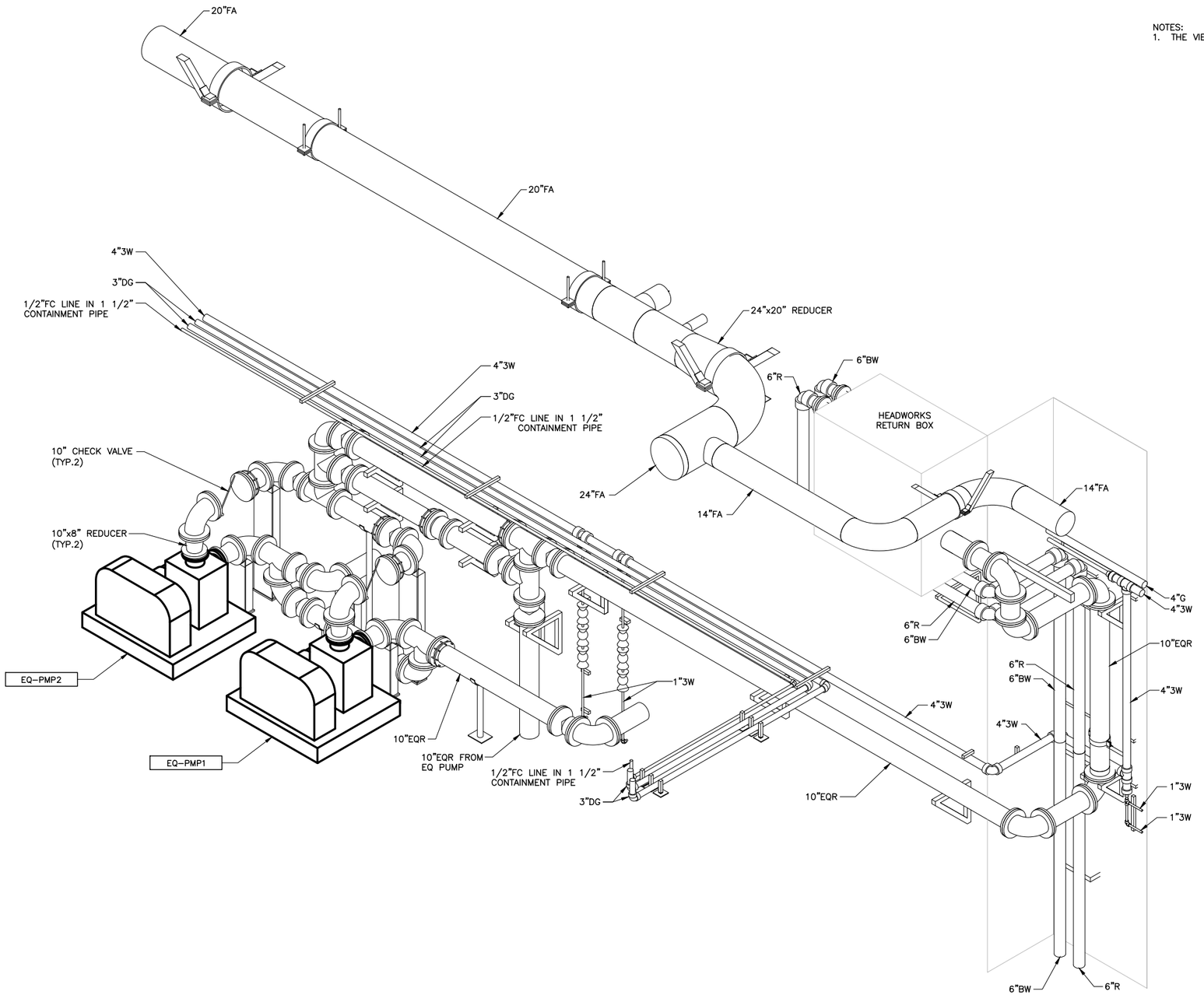

EQ PUMP AREA

SCALE: NTS

REGISTERED PROFESSIONAL ENGINEER — MARK W. TAKEMOTO — No. 64369 — Exp. 06-30-17 — CIVIL — STATE OF CALIFORNIA

0" 1" — VERIFY SCALES — BAR IS ONE INCH LONG ON FULL SIZE DRAWING. IF NOT ONE INCH LONG ON THIS DRAWING, ADJUST SCALES ACCORDINGLY

RMC water and environment

REV	DATE	BY	APVD	DESCRIPTION
1				
2				
3				
4				
5				

DESIGNED	M. TAKEMOTO
DRAWN	S. NGUYEN
CHECKED	M. NAKAMOTO

SUBMITTED: MARK TAKEMOTO — RMC PROJECT ENGINEER CE-64369

APPROVED: STEVE CLARY — RMC ENGINEER CE-30318

SAUSALITO · MARIN CITY SANITARY DISTRICT

TREATMENT AND WET WEATHER FLOW UPGRADE

ILLUSTRATIVE ISOMETRIC VIEWS - 2

DWG NO	M110-2
SHEET NO	143 OF 226
PROJ NO	055-006
DATE	NOVEMBER 2016

FILENAME: 0055-006-M110-2 11-11-16 12:29pm CTo || XREFS: | X-SMCSD-TBLK | MTakemoto-PE-stamp |<--

Last Saved By: mtakemoto 3-14-16 08:48am

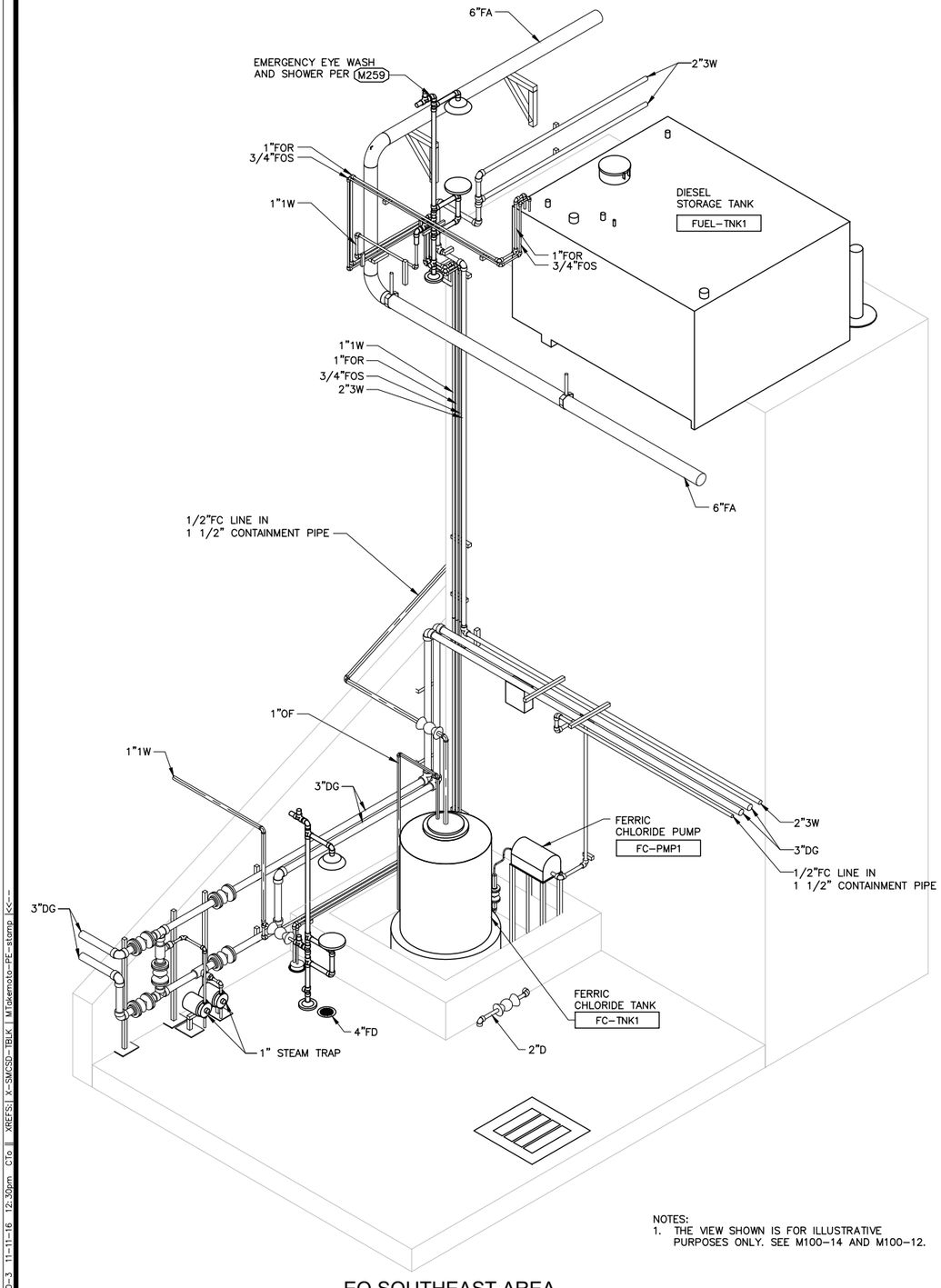

NOTES:
1. THE VIEW SHOWN IS FOR ILLUSTRATIVE PURPOSES ONLY. SEE M100–14 AND M100–12.

EQ SOUTHEAST AREA

SCALE: NTS

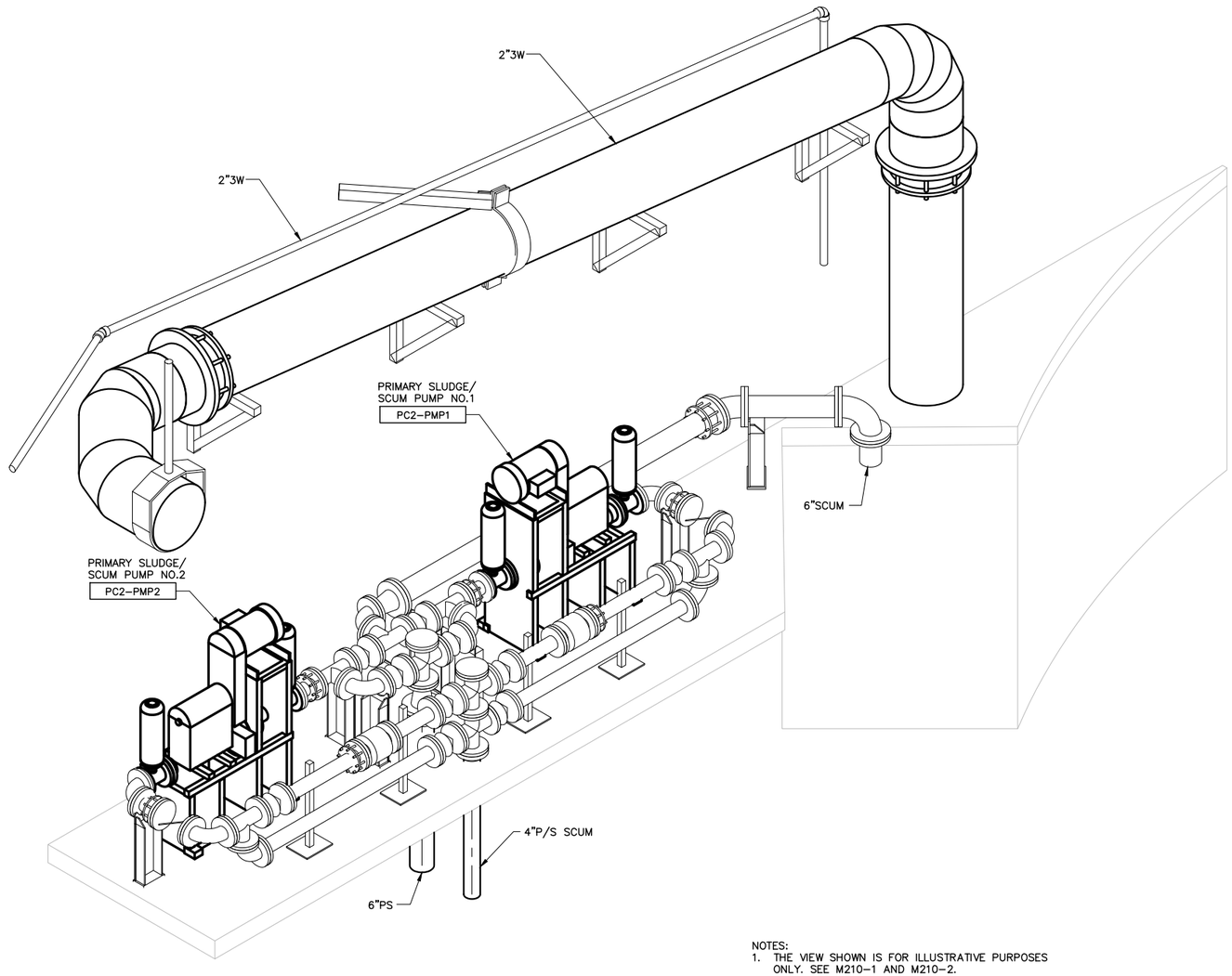

NOTES:
1. THE VIEW SHOWN IS FOR ILLUSTRATIVE PURPOSES ONLY. SEE M210–1 AND M210–2.

PRIMARY SLUDGE/SCUM AREA

SCALE: NTS

REGISTERED PROFESSIONAL ENGINEER — MARK W. TAKEMOTO — No. 64369 — Exp. 06–30–17 — CIVIL — STATE OF CALIFORNIA

0" 1" — VERIFY SCALES BAR IS ONE INCH LONG ON FULL SIZE DRAWING. IF NOT ONE INCH LONG ON THIS DRAWING, ADJUST SCALES ACCORDINGLY

RMC water and environment

REV	DATE	BY	APVD	DESCRIPTION
1				
2				
3				
4				
5				

DESIGNED	M. TAKEMOTO
DRAWN	S. NGUYEN
CHECKED	M. NAKAMOTO

SUBMITTED: MARK TAKEMOTO — RMC PROJECT ENGINEER CE-64369

APPROVED: STEVE CLARY — RMC ENGINEER CE-30318

SAUSALITO · MARIN CITY SANITARY DISTRICT

4"D

TREATMENT AND WET WEATHER FLOW UPGRADE

ILLUSTRATIVE ISOMETRIC VIEWS - 3

DWG NO	M110-3
SHEET NO	144 OF 226
PROJ NO	055-006
DATE	NOVEMBER 2016

FILENAME: 0055-006-M110-3 11-11-16 12:30pm CTo || XREFS:| X-SMCSD-TBLK | MTakemoto-PE-stamp |<<--

Last Saved By: mtakemoto 10-07-16 12:07pm

NOTES:
1. DETAILED DESIGN OF COVER BY MANUFACTURER. BEAM SPACING AND NUMBER OF BEAMS BY MANUFACTURER. SEE SPECIFICATION SECTION 13130.
2. LOCATE HATCH TO ALLOW ACCESS TO SCUM TROUGH.
3. LOCATE HATCHES TO ALLOW ACCESS TO INFLUENT FEEDWELL (TYP OF 2).
4. CONTRACTOR SHALL SEAL ALL OPENINGS THROUGH COVER TO MAKE AIR TIGHT.
5. CONTRACTOR SHALL BE RESPONSIBLE FOR COORDINATING DIMENSIONS, CONNECTIONS AND ALL OTHER REQUIREMENT TO ENSURE PROPER INSTALLATION AND OPERATION AMONGST ALL EQUIPMENT.
6. SCUM TROUGH VALVING SHALL BE SUPPORTED BY THE COVER. SUPPORT SHALL COORDINATED WITH AND APPROVED BY THE COVER MANUFACTURER.
7. SEE SHEET M200-3 FOR ILLUSTRATIVE SECTION VIEW.

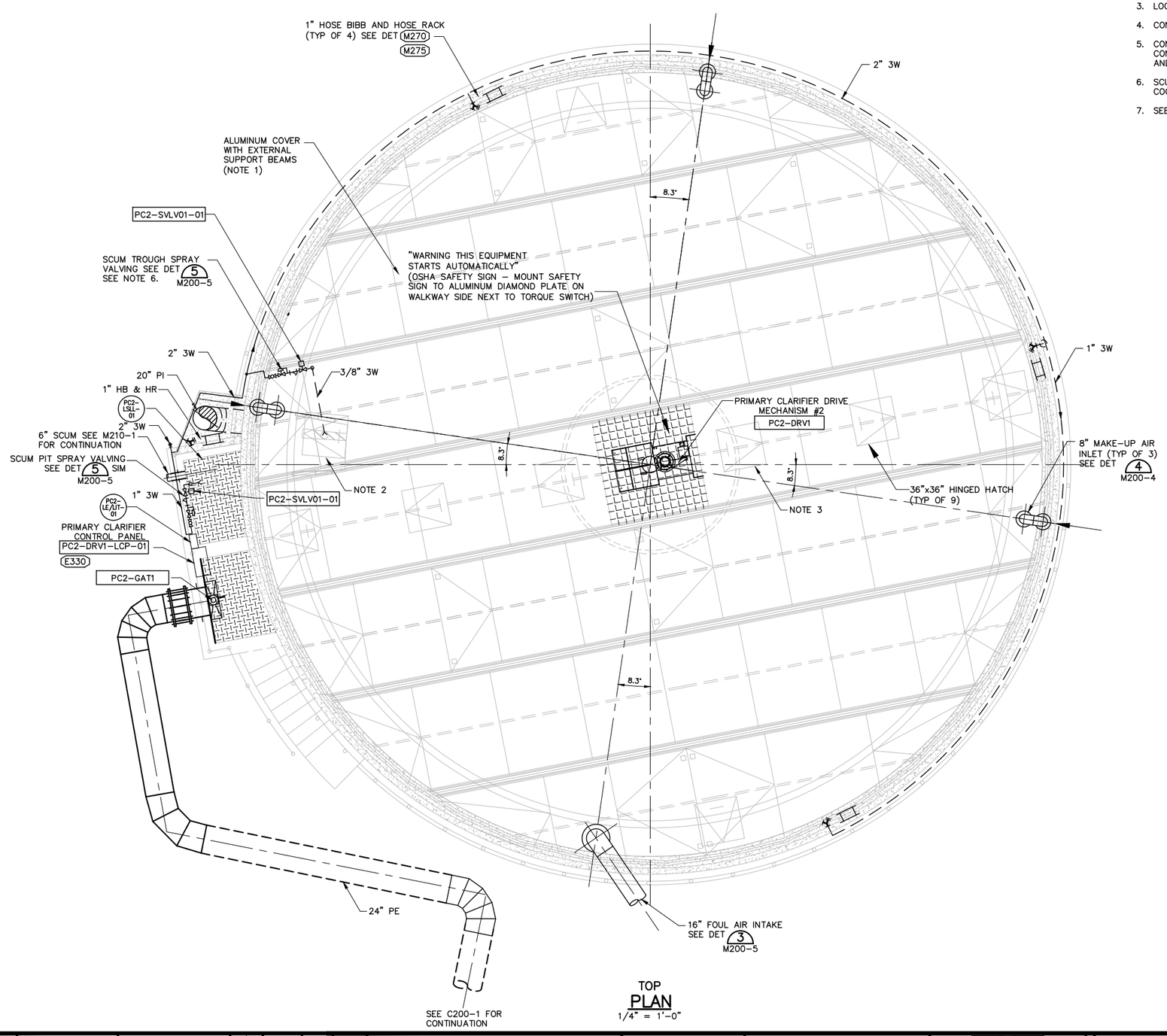

TOP PLAN
1/4" = 1'-0"

REGISTERED PROFESSIONAL ENGINEER — MARK W. TAKEMOTO — No. 64369 — Exp. 06-30-17 — CIVIL — STATE OF CALIFORNIA

0" 1" — VERIFY SCALES — BAR IS ONE INCH LONG ON FULL SIZE DRAWING. IF NOT ONE INCH LONG ON THIS DRAWING, ADJUST SCALES ACCORDINGLY

RMC water and environment

REV	DATE	BY	APVD	DESCRIPTION

DESIGNED M. TAKEMOTO
DRAWN S. JUNG
CHECKED M. NAKAMOTO

SUBMITTED: MARK TAKEMOTO, RMC PROJECT ENGINEER CE-64369
APPROVED: STEVE CLARY, RMC ENGINEER CE-30318

SAUSALITO · MARIN CITY SANITARY DISTRICT

TREATMENT AND WET WEATHER FLOW UPGRADE

PRIMARY CLARIFIER NO. 2
TOP PLAN

DWG NO M200-1
SHEET NO 145 OF 226
PROJ NO 055-006
DATE NOVEMBER 2016

FILENAME: 0055-006-M200-1 11-11-16 12:30pm CTo | XREFS: | X-SMCSD-TBLK | S-TANK-PLAN | MTakemoto-PE-stamp |<<--

Last Saved By: mtakemoto 3-14-16 11:21am

NOTES:
1. CONTRACTOR SHALL BE RESPONSIBLE FOR COORDINATE DIMENSIONS, CONNECTIONS AND ALL OTHER REQUIREMENT TO ENSURE PROPER INSTALLATION AND OPERATION AMONGST ALL EQUIPMENT.

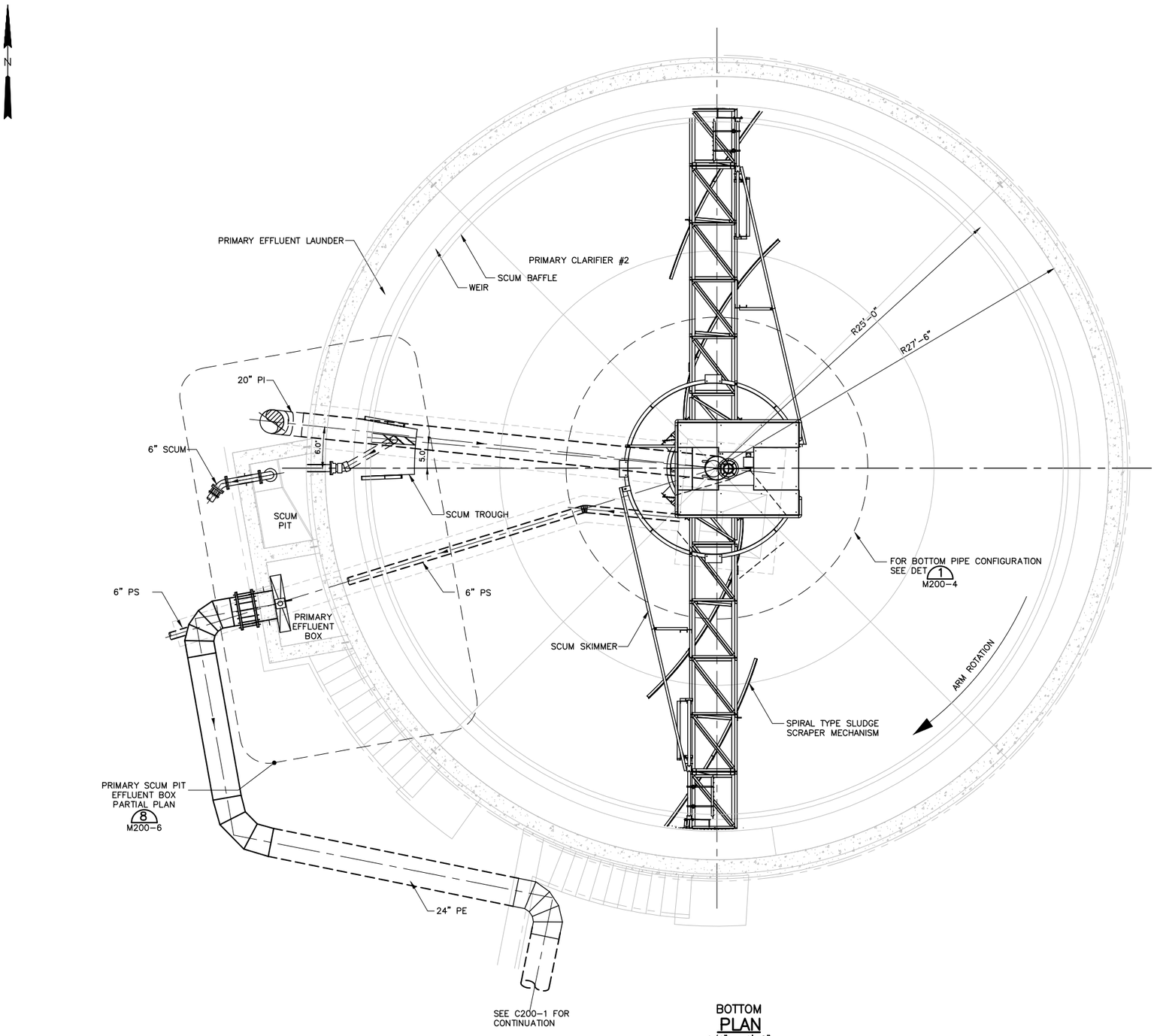

BOTTOM PLAN
1/4" = 1'-0"

REGISTERED PROFESSIONAL ENGINEER — MARK W. TAKEMOTO — No. 64369 — Exp. 06-30-17 — CIVIL — STATE OF CALIFORNIA

0" 1" — VERIFY SCALES — BAR IS ONE INCH LONG ON FULL SIZE DRAWING. IF NOT ONE INCH LONG ON THIS DRAWING, ADJUST SCALES ACCORDINGLY

RMC water and environment

REV	DATE	BY	APVD	DESCRIPTION

DESIGNED M. TAKEMOTO
DRAWN S. JUNG
CHECKED M. NAKAMOTO

SUBMITTED: MARK TAKEMOTO, RMC PROJECT ENGINEER CE-64369
APPROVED: STEVE CLARY, RMC ENGINEER CE-30318

SAUSALITO · MARIN CITY SANITARY DISTRICT

TREATMENT AND WET WEATHER FLOW UPGRADE

PRIMARY CLARIFIER NO. 2
BOTTOM PLAN

DWG NO M200-2
SHEET NO 146 OF 226
PROJ NO 055-006
DATE NOVEMBER 2016

FILENAME: 0055-006-M200-2 11-11-16 12:30pm CTo || XREFS:| X-SMCSD-TBLK | S-TANK-PLAN | MTakemoto-PE-stamp |<<--

Last Saved By: mtakemoto 3-14-16 10:57am

NOTES:

1. ILLUSTRATIVE CUT. SEE PLAN VIEWS FOR ACTUAL ORIENTATION OF FEATURES SHOWN.
2. CONTRACTOR SHALL BE RESPONSIBLE FOR COORDINATING DIMENSIONS, CONNECTIONS AND ALL OTHER REQUIREMENT TO ENSURE PROPER INSTALLATION AND OPERATION AMONGST ALL EQUIPMENT.
3. PIPE SUPPORT AND ANCHORAGE SHALL BE DESIGN BY THE CONTRACTOR AND SHALL MEET THE REQUIREMENTS LISTED ON SHEET S-1.
4. SCUM TROUGH VALVING SHALL BE SUPPORTED BY THE COVER. SUPPORT SHALL COORDINATED WITH AND APPROVED BY THE COVER MANUFACTURER.

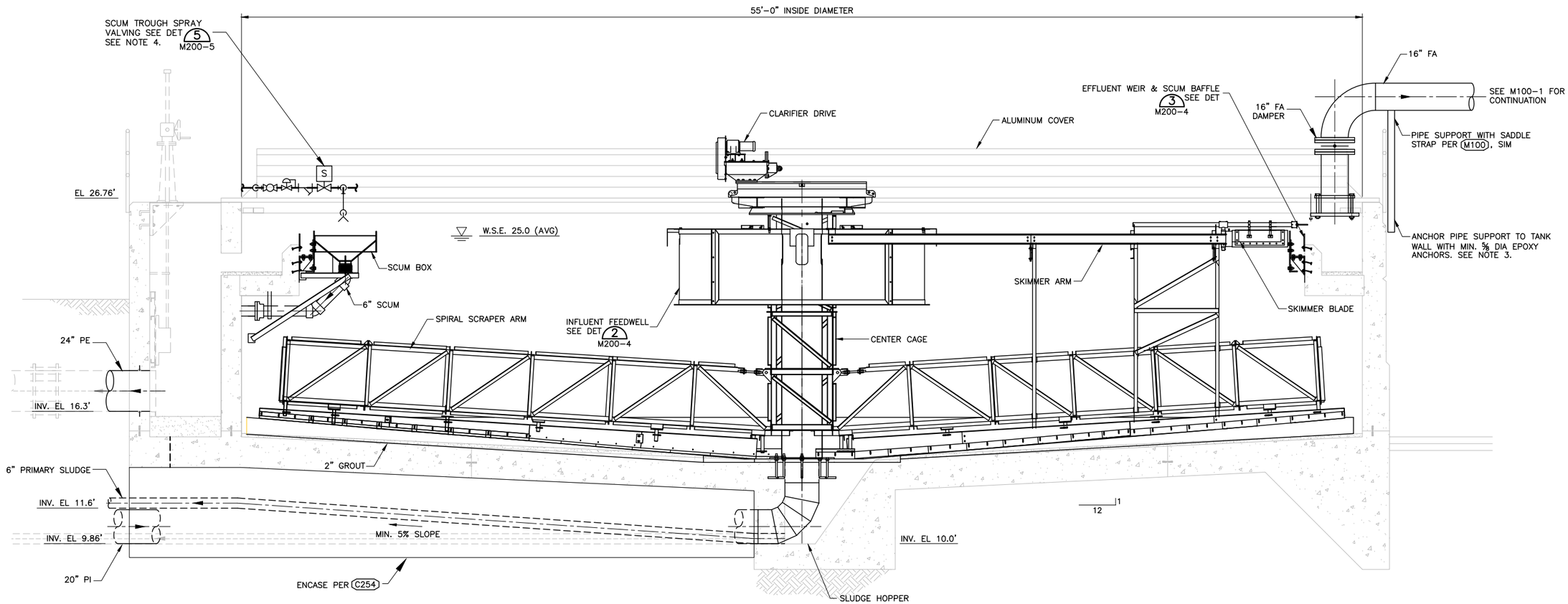

SECTION
3/8" = 1'-0"

REGISTERED PROFESSIONAL ENGINEER — MARK W. TAKEMOTO — No. 64369 Exp. 06-30-17 — CIVIL — STATE OF CALIFORNIA

0" 1" — VERIFY SCALES — BAR IS ONE INCH LONG ON FULL SIZE DRAWING. IF NOT ONE INCH LONG ON THIS DRAWING, ADJUST SCALES ACCORDINGLY

RMC water and environment

REV	DATE	BY	APVD	DESCRIPTION
1				
2				
3				
4				
5				

DESIGNED	M. TAKEMOTO
DRAWN	S. JUNG
CHECKED	M. NAKAMOTO

SUBMITTED: MARK TAKEMOTO, RMC PROJECT ENGINEER CE-64369

APPROVED: STEVE CLARY, RMC ENGINEER CE-30318

SAUSALITO · MARIN CITY SANITARY DISTRICT

TREATMENT AND WET WEATHER FLOW UPGRADE

PRIMARY CLARIFIER SECTION

DWG NO	M200-3
SHEET NO	147 OF 226
PROJ NO	055-006
DATE	NOVEMBER 2016

FILENAME: 0055-006-M200-3 11-11-16 12:31pm CTo || XREFS: | X-SMCSD-TBLK | S-TANK-SECT | MTakemoto-PE-stamp |<<--

Last Saved By: mtakemoto 3-14-16 10:57am

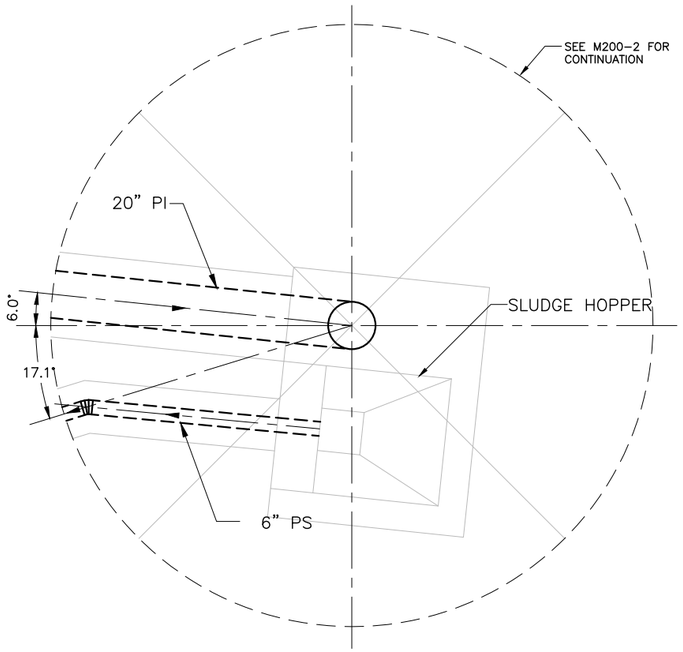

NOTE:

1. ONLY PRIMARY INFLUENT AND PRIMARY SLUDGE PIPE ORIENTATION SHOWN.
2. DIMENSIONS PER S200-1.

HOPPER DETAIL 1
NOT TO SCALE M200-2

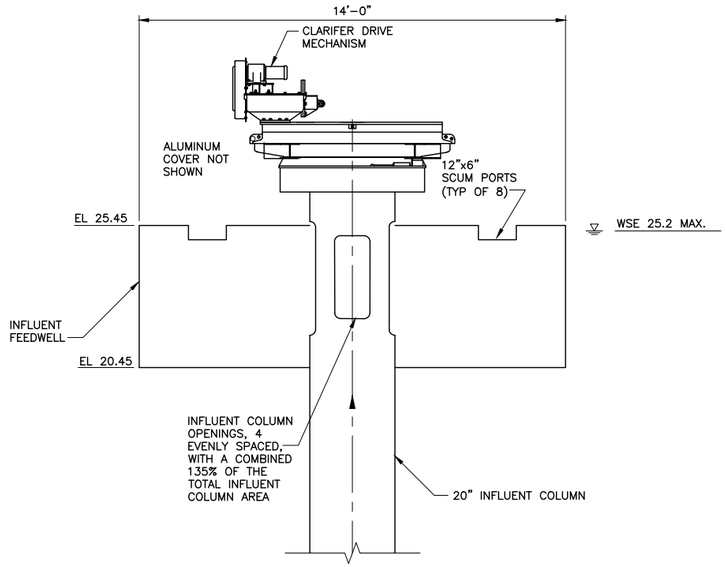

DETAIL 2
NTS M200-3

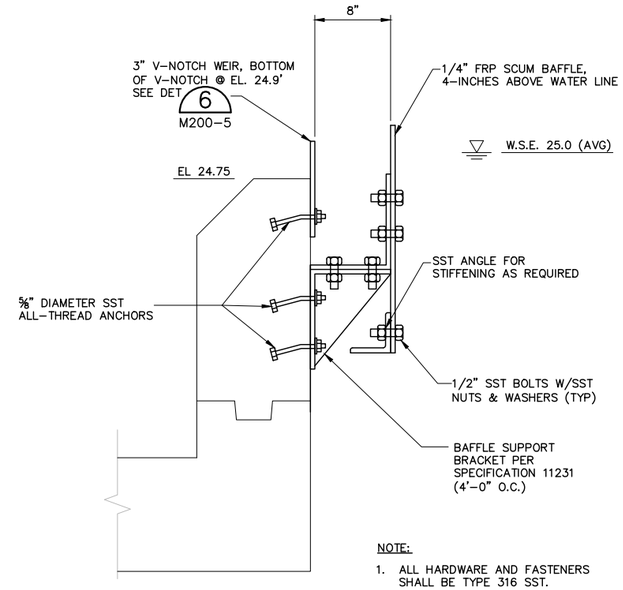

NOTE:

1. ALL HARDWARE AND FASTENERS SHALL BE TYPE 316 SST.

EFFLUENT WEIR & SCUM BAFFLE DETAIL 3
NOT TO SCALE M200-3

FILENAME: 0055-006-M200-4 11-11-16 12:31pm CTo || XREFS: | X-SMCSD-TBLK | S-TANK-SECT | S-TANK-PLAN | MTakemoto-PE-stamp |<<--

Last Saved By: mtakemoto 3-14-16 11:01am

REGISTERED PROFESSIONAL ENGINEER — MARK W. TAKEMOTO — No. 64369 Exp. 06-30-17 CIVIL — STATE OF CALIFORNIA

0" 1" — VERIFY SCALES — BAR IS ONE INCH LONG ON FULL SIZE DRAWING. IF NOT ONE INCH LONG ON THIS DRAWING, ADJUST SCALES ACCORDINGLY

RMC water and environment

REV	DATE	BY	APVD	DESCRIPTION
1				
2				
3				
4				
5				

DESIGNED	M. TAKEMOTO
DRAWN	S. JUNG
CHECKED	M. NAKAMOTO

SUBMITTED: MARK TAKEMOTO, RMC PROJECT ENGINEER CE-64369

APPROVED: STEVE CLARY, RMC ENGINEER CE-30318

SAUSALITO · MARIN CITY SANITARY DISTRICT

TREATMENT AND WET WEATHER FLOW UPGRADE

PRIMARY CLARIFIER DETAILS - 1

DWG NO	M200-4
SHEET NO	148 OF 226
PROJ NO	055-006
DATE	NOVEMBER 2016

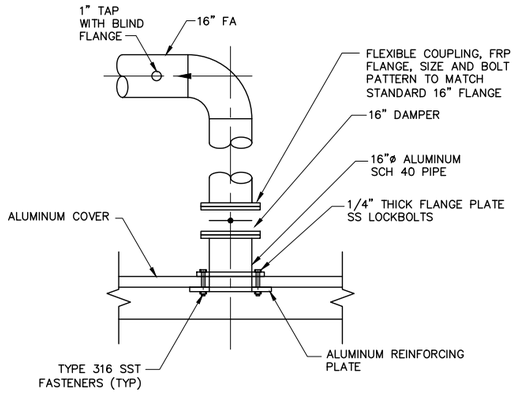

NOTE:
1. COVER MANUFACTURER TO PROVIDE REINFORCING PLATES, ANCHOR BOLTS, AND 16" ALUMINUM FLANGED STUBOUT PIPE.
2. 316 SST FASTENERS SHALL BE INSTALLED WITH INSULATING SLEEVES AND WASHERS TO PREVENT CONTACT WITH ALUMINUM.

FOUL AIR INTAKE DETAIL 3
NOT TO SCALE — M200-1

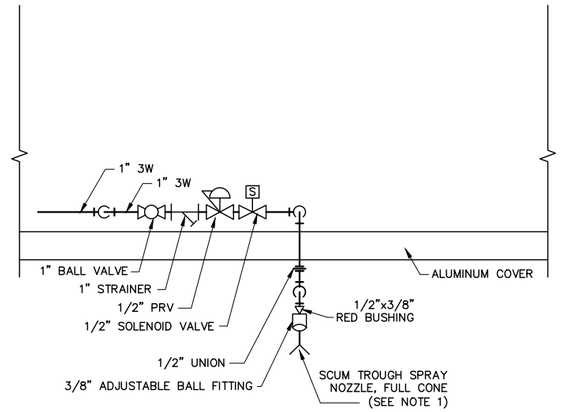

NOTE:
1. LOCATE SCUM TROUGH SPRAY NOZZLE OVER 6" SCUM DRAIN PIPE, FIELD FIT. FULL CONE SPRAY NOZZLE.

SCUM PIT SPRAY SECTION DETAIL 5
NOT TO SCALE — M200-1,3

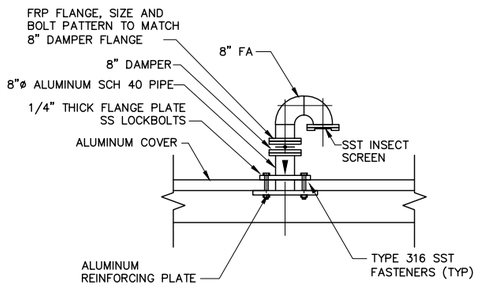

NOTE:
1. COVER MANUFACTURER TO PROVIDE REINFORCING PLATES, ANCHOR BOLTS, AND 8" ALUMINUM FLANGED STUBOUT PIPE.
2. 316 SST FASTENERS SHALL BE INSTALLED WITH INSULATING SLEEVES AND WASHERS TO PREVENT CONTACT WITH ALUMINUM.

MAKE-UP AIR INLET DETAIL 4
NOT TO SCALE — M200-1

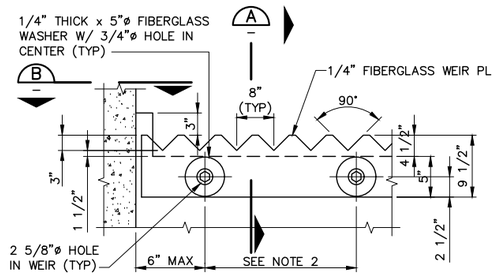

ELEVATION

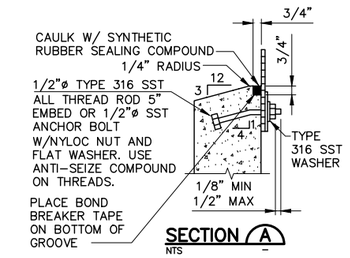

SECTION A
NTS

NOTES:
1. ALL EDGES, VOIDS, AND SPLICES SHALL BE SEALED WATER TIGHT W/ SYNTHETIC RUBBER SEALING COMPOUND.
2. ANCHOR BOLT SPACING = 12" OC FOR STRAIGHT WEIRS AND 2'-0" OC FOR CIRCULAR WEIRS.
3. ADJUST WEIR LEVEL AT CALM WATER SURFACE TO WITHIN ± 1/32 INCH OF THE INDICATED ELEVATION. CONSTRUCTION MANAGER TO APPROVE PRIOR TO CAULKING.

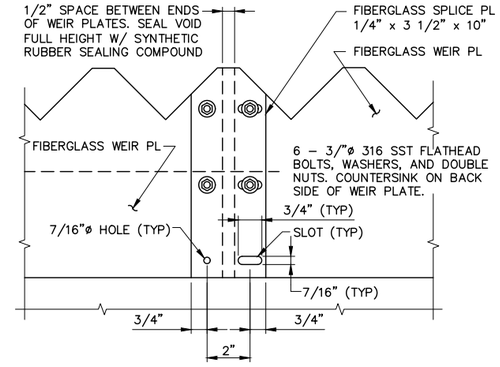

SPLICE PLATE ELEVATION

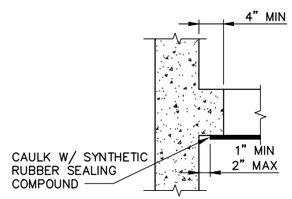

SECTION B
NTS

V-NOTCH WEIR 6
NOT TO SCALE — M200-4

REGISTERED PROFESSIONAL ENGINEER — MARK W. TAKEMOTO — No. 64369 — Exp. 06-30-17 — CIVIL — STATE OF CALIFORNIA

0" 1" — VERIFY SCALES — BAR IS ONE INCH LONG ON FULL SIZE DRAWING. IF NOT ONE INCH LONG ON THIS DRAWING, ADJUST SCALES ACCORDINGLY

REV	DATE	BY	APVD	DESCRIPTION

DESIGNED	M. TAKEMOTO
DRAWN	S. JUNG
CHECKED	M. NAKAMOTO

SUBMITTED: MARK TAKEMOTO, RMC PROJECT ENGINEER CE-64369

APPROVED: STEVE CLARY, RMC ENGINEER CE-30318

SAUSALITO · MARIN CITY SANITARY DISTRICT

TREATMENT AND WET WEATHER FLOW UPGRADE

PRIMARY CLARIFIER DETAILS - 2

DWG NO	M200-5
SHEET NO	149 OF 226
PROJ NO	055-006
DATE	NOVEMBER 2016

FILENAME: 0055-006-M200-5 11-11-16 12:32pm CTo || XREFS: X-SMCSD-TBLK | MTakemoto-PE-stamp |<<--

Last Saved By: mtakemoto 3-14-16 11:01am

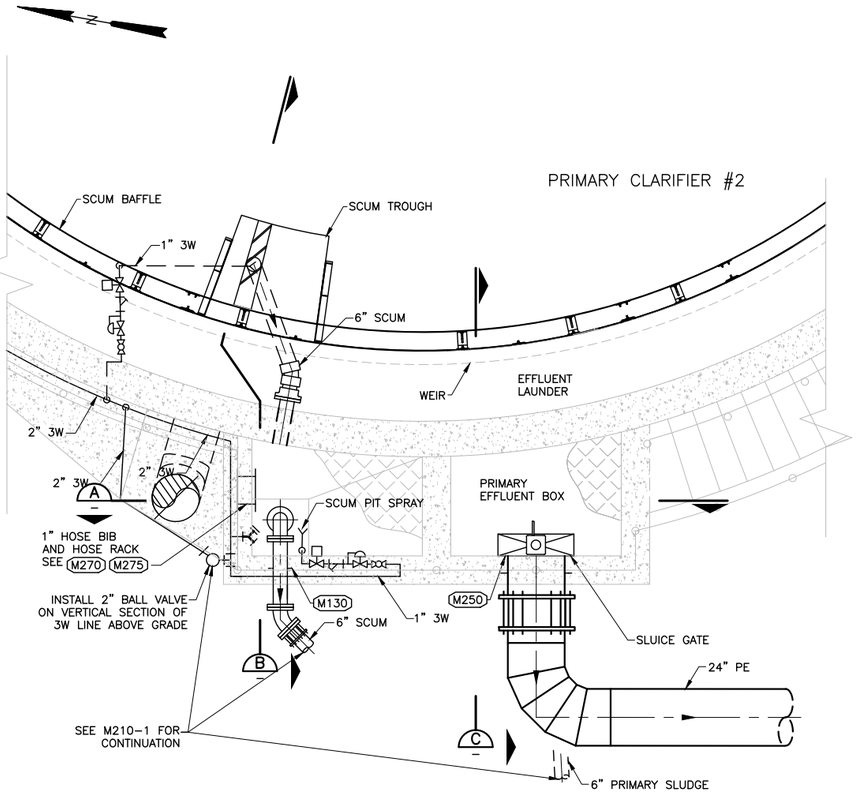

PARTIAL PLAN
DETAIL 8
3/8" = 1'-0" M200-2

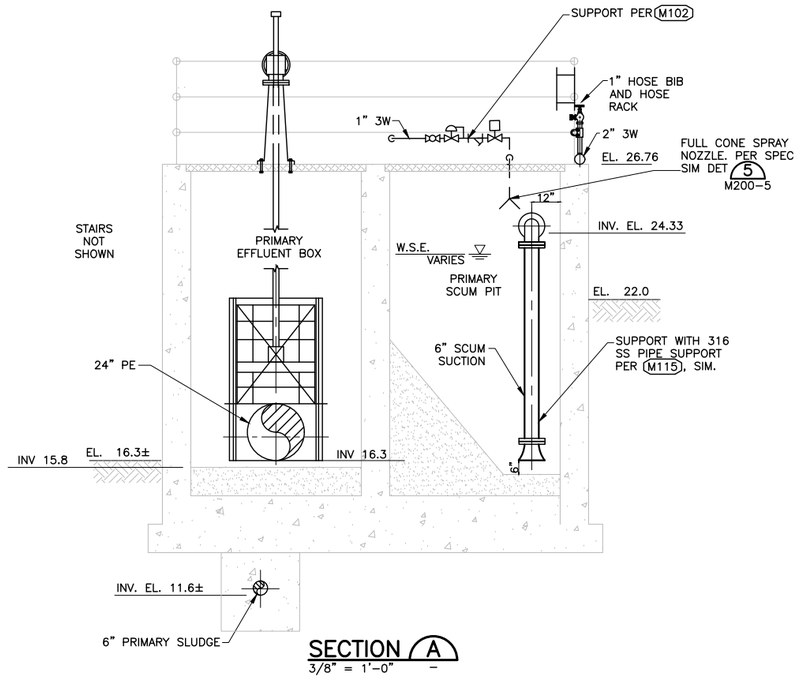

SECTION A
3/8" = 1'-0"

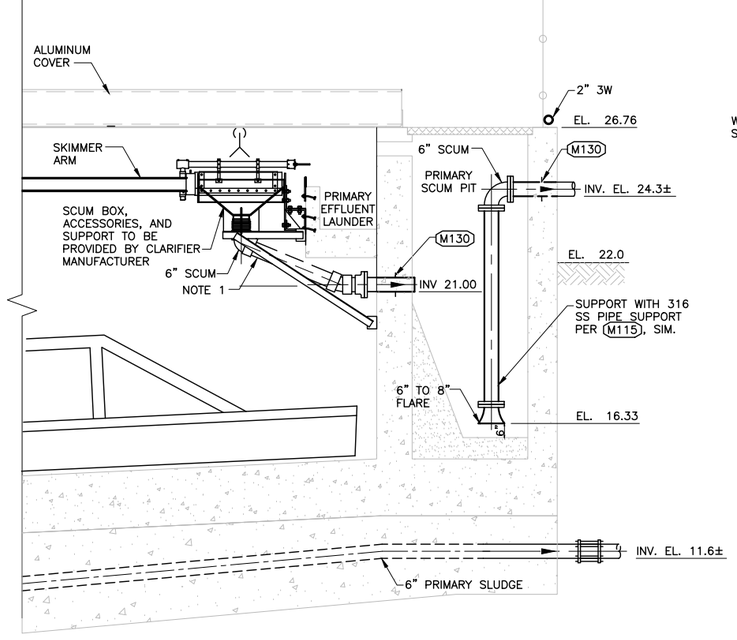

NOTE:
1. SLOPE 6" SCUM AT MIN OF 1/8" PER FOOT TOWARDS SCUM PIT.

SECTION B
3/8" = 1'-0"

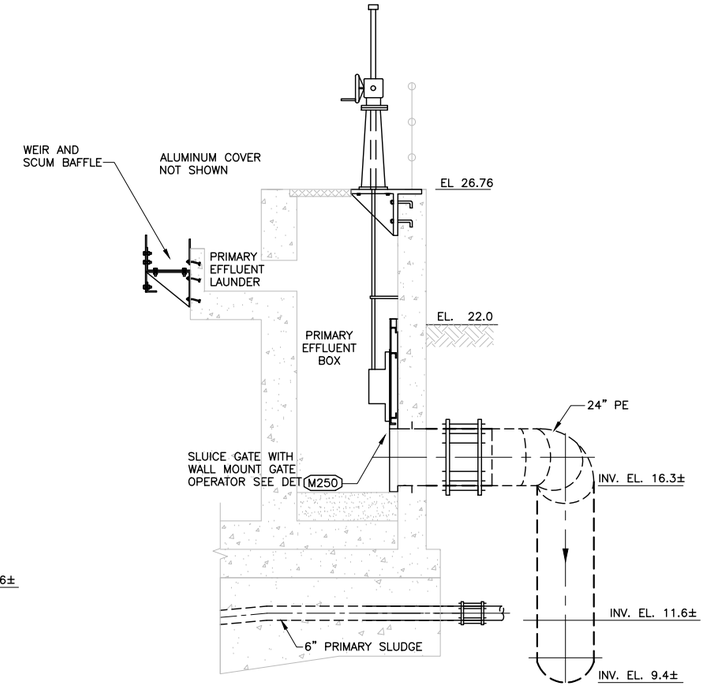

SECTION C
3/8" = 1'-0"

REGISTERED PROFESSIONAL ENGINEER MARK W. TAKEMOTO No. 64369 Exp. 06-30-17 CIVIL STATE OF CALIFORNIA

0" 1" — VERIFY SCALES — BAR IS ONE INCH LONG ON FULL SIZE DRAWING. IF NOT ONE INCH LONG ON THIS DRAWING, ADJUST SCALES ACCORDINGLY

RMC water and environment

REV	DATE	BY	APVD	DESCRIPTION

DESIGNED M. TAKEMOTO
DRAWN S. JUNG
CHECKED M. NAKAMOTO

SUBMITTED: MARK TAKEMOTO, RMC PROJECT ENGINEER CE-64369
APPROVED: STEVE CLARY, RMC ENGINEER CE-30318

SAUSALITO · MARIN CITY SANITARY DISTRICT

TREATMENT AND WET WEATHER FLOW UPGRADE

SCUM PIT AND EFFLUENT BOX PARTIAL PLAN AND SECTIONS

DWG NO M200-6
SHEET NO 150 OF 226
PROJ NO 055-006
DATE NOVEMBER 2016

FILENAME: 0055-006-M200-6 11-11-16 12:32pm CTo | XREFS: | X-SMCSD-TBLK | S-TANK-SECT | MTakemoto-PE-stamp |<<--

Last Saved By: mtakemoto 3-14-16 11:01am

NOTES:
1. MOUNT OSHA SAFETY SIGN TO EACH SCUM/SLUDGE PUMP GEAR BOX COVER – "WARNING THIS EQUIPMENT STARTS AUTOMATICALLY"

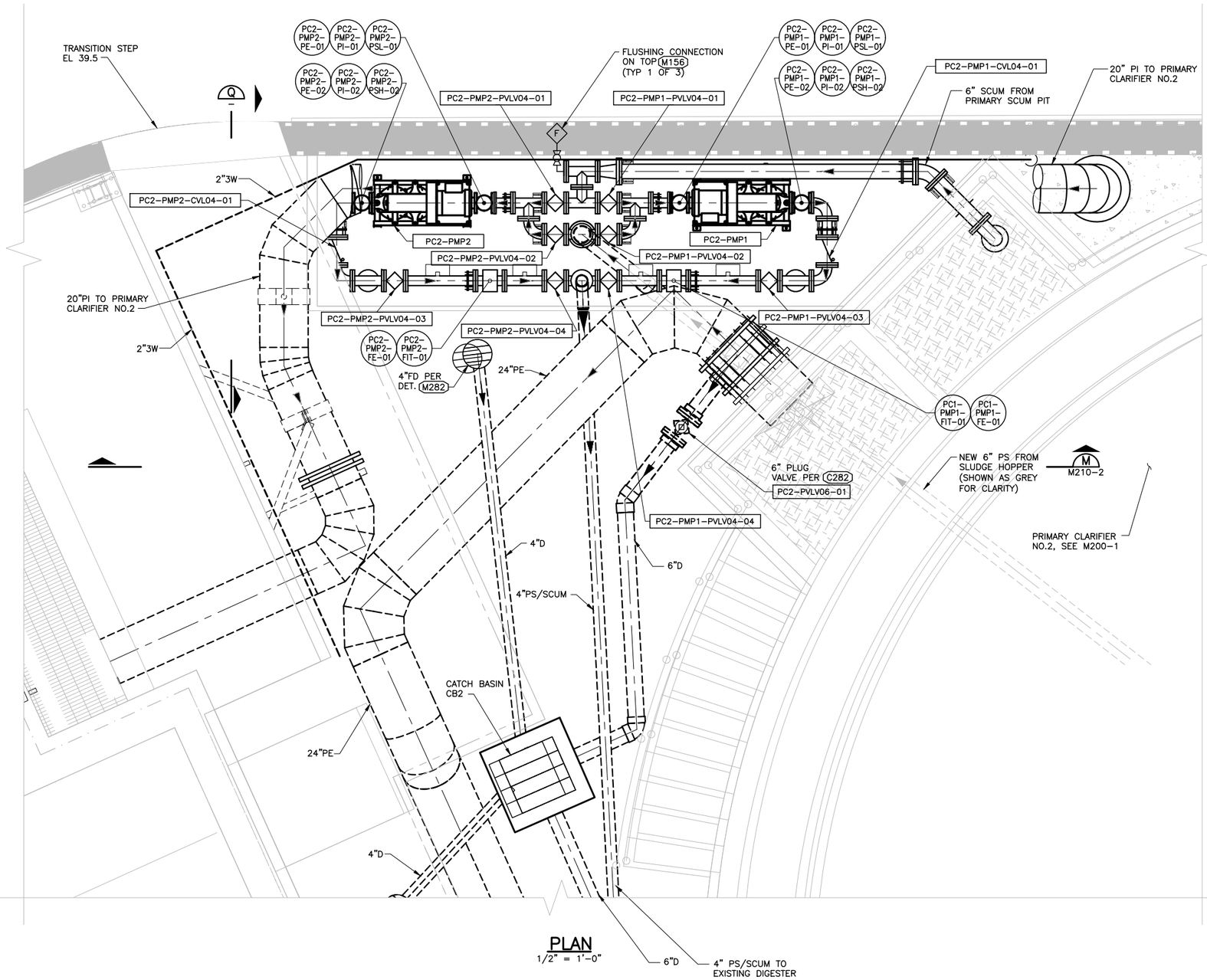

PLAN
1/2" = 1'-0"

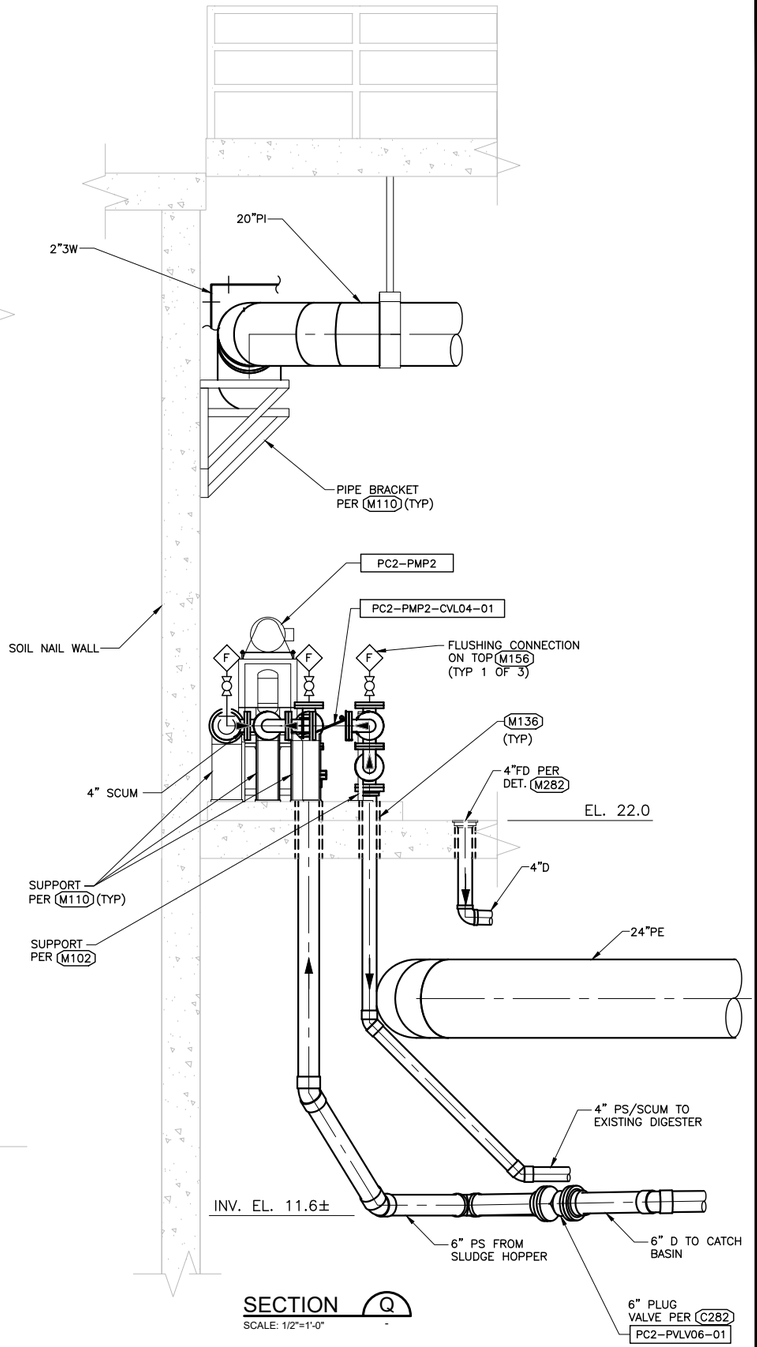

SECTION Q
SCALE: 1/2"=1'-0"

REGISTERED PROFESSIONAL ENGINEER MARK W. TAKEMOTO No. 64369 Exp. 06-30-17 CIVIL STATE OF CALIFORNIA

0" 1" VERIFY SCALES BAR IS ONE INCH LONG ON FULL SIZE DRAWING. IF NOT ONE INCH LONG ON THIS DRAWING, ADJUST SCALES ACCORDINGLY

RMC water and environment

REV	DATE	BY	APVD	DESCRIPTION

DESIGNED	M. TAKEMOTO
DRAWN	S. NGUYEN
CHECKED	M. NAKAMOTO

SUBMITTED: MARK TAKEMOTO, RMC PROJECT ENGINEER CE-64369

APPROVED: STEVE CLARY, RMC ENGINEER CE-30318

SAUSALITO · MARIN CITY SANITARY DISTRICT

TREATMENT AND WET WEATHER FLOW UPGRADE

PRIMARY SLUDGE/SCUM PUMPS PARTIAL PLAN AND SECTION

DWG NO	M210-1
SHEET NO	151 OF 226
PROJ NO	055-006
DATE	NOVEMBER 2016

FILENAME: 0055-006-M210-1 11-11-16 12:33pm CTo | XREFS: | X-SMCSD-TBLK | X-Topo Survey new | X-Site | X-SitePlan | X-Treatment Plant site plan | 0055-006-M100-2 | MTakemoto-PE-stamp |<<--- | 0055-006-M100-3 | S-HEADWORKS-PLAN | X-Headworks Sections | 0055-006-M100-2 | MTakemoto-PE-stamp |<<--- | 0055-006-M100-4 | 0055-006-M210-1 11-11-16 12:33pm CTo

Last Saved By: mtakemoto 3-14-16 11:03am

NOTE:

1. CONTRACTOR SHALL PROVIDE ALL PIPE SUPPORT AS REQUIRED IN SECTION 15006. SUPPORT ANCHORAGE CALCULATION SHALL BE SUBMITTED TO THE CONSTRUCTION MANAGER FOR APPROVAL.

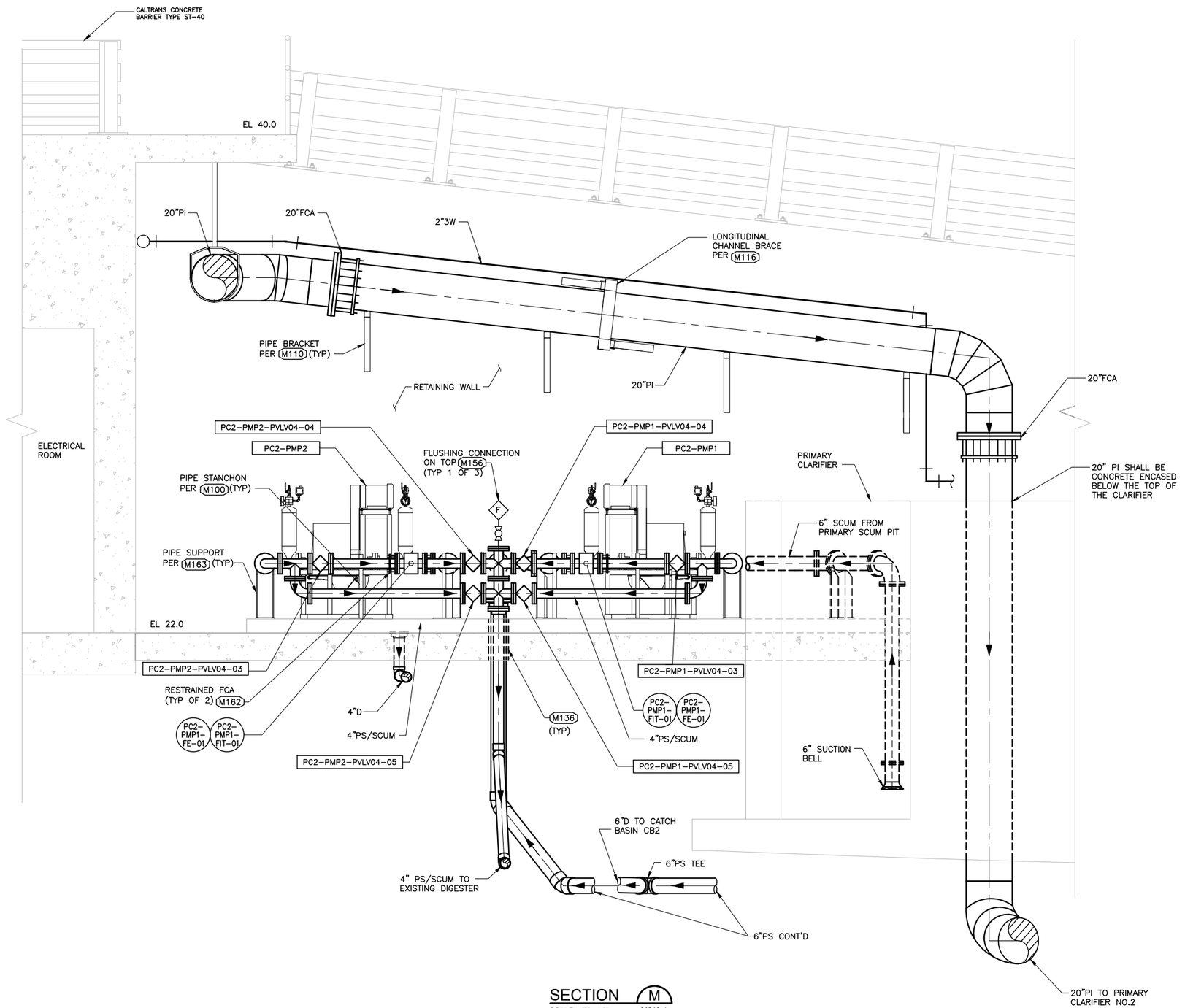

SECTION M
SCALE: 1/2"=1'-0" M210-1

REGISTERED PROFESSIONAL ENGINEER MARK W. TAKEMOTO No. 64369 Exp. 06-30-17 CIVIL STATE OF CALIFORNIA

0" 1" — VERIFY SCALES — BAR IS ONE INCH LONG ON FULL SIZE DRAWING. IF NOT ONE INCH LONG ON THIS DRAWING, ADJUST SCALES ACCORDINGLY

RMC water and environment

REV	DATE	BY	APVD	DESCRIPTION
1				
2				
3				
4				
5				

DESIGNED	M. TAKEMOTO
DRAWN	S. NGUYEN
CHECKED	M. NAKAMOTO

SUBMITTED: MARK TAKEMOTO, RMC PROJECT ENGINEER CE-64369

APPROVED: STEVE CLARY, RMC ENGINEER CE-30318

SAUSALITO · MARIN CITY SANITARY DISTRICT

TREATMENT AND WET WEATHER FLOW UPGRADE

PRIMARY SLUDGE/SCUM PUMPS PARTIAL PLAN AND SECTION

DWG NO	M210-2
SHEET NO	152 OF 226
PROJ NO	055-006
DATE	NOVEMBER 2016

FILENAME: 0055-006-M210-2 11-11-16 12:33pm CTo || XREFS: X-SMCSD-TBLK | X-Headworks Sections | X-SitePlan | MTakemoto-PE-stamp |<<--

Last Saved By: mtakemoto 3-14-16 01:48pm

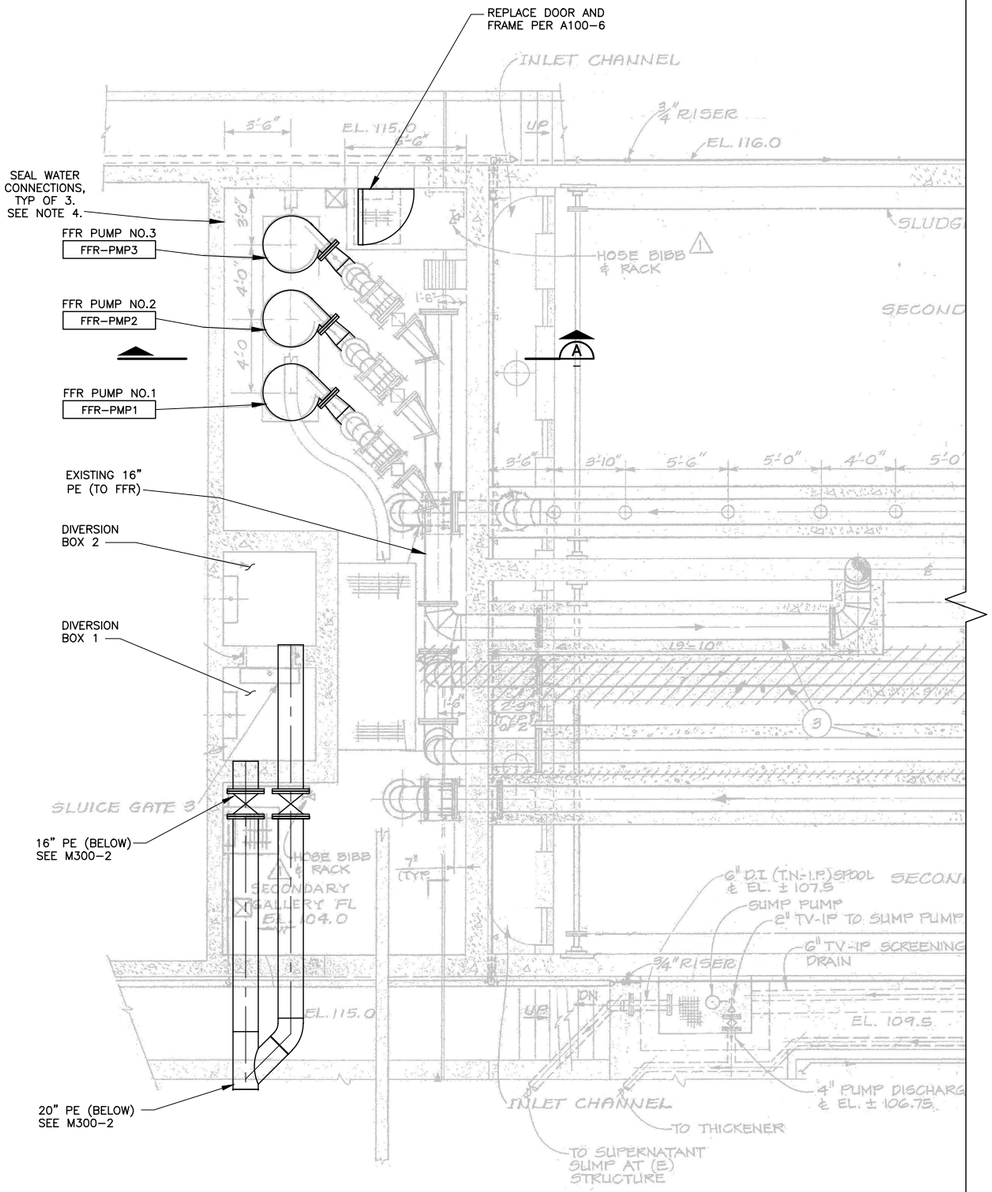

FFR PUMP ROOM PLAN
1/4" = 1'-0"

NOTES:

1. CONTRACTOR SHALL FURNISH AND INSTALL NEW FFR PUMPS, VALVES AND PIPING AS SHOWN. CONTRACTOR SHALL BE RESPONSIBLE FOR CONFIRMING DIMENSIONS AND COORDINATING INSTALLATION REQUIREMENTS WITH THE PUMP MANUFACTURER.
2. CONSTRUCTION SEQUENCING SHALL BE PERFORMED IN ACCORDANCE WITH SECTION 01040.
3. NEW FFR PUMP DISCHARGE PIPING AND VALVES SHALL BE SUPPORTED USING EXISTING PIPE SUPPORTS. CONTRACTOR SHALL MODIFY THE EXISTING SUPPORTS AS NECESSARY.
4. CONNECT THE EXISTING SEAL WATER ASSEMBLIES MOUNTED ON THE NORTH WALL OF THE FFR PUMP ROOM TO THE PUMP SEALS. SEAL WATER FLOW RATE AND PRESSURE SHALL BE SET BY THE CONTRACTOR BASED ON THE PUMP MANUFACTURER'S RECOMMENDATIONS.
5. MECHANICAL BACKGROUND TAKEN FROM WASTEWATER PLANT IMPROVEMENTS 1988 RECORD DRAWING SET (SHEETS M-3, M-7, SEE REFERENCE DRAWINGS).
6. REFERENCE DRAWING DATUM IS USGS 1929 MSL+100.

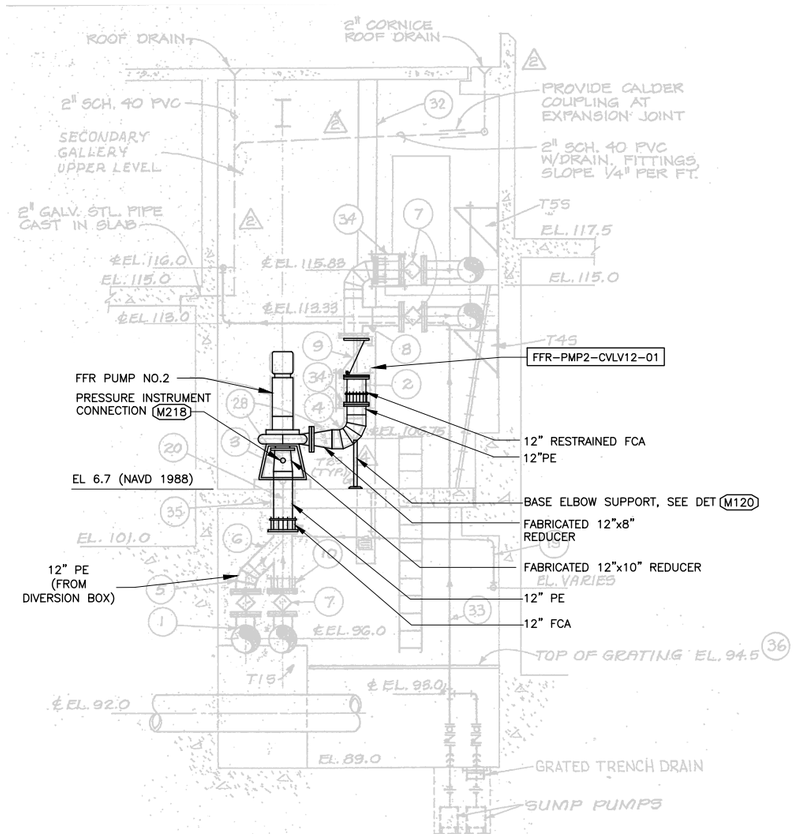

SECTION A
1/4" = 1'-0"

REGISTERED PROFESSIONAL ENGINEER — MARK W. TAKEMOTO — No. 64369 — Exp. 06-30-17 — CIVIL — STATE OF CALIFORNIA

0" 1" — VERIFY SCALES — BAR IS ONE INCH LONG ON FULL SIZE DRAWING. IF NOT ONE INCH LONG ON THIS DRAWING, ADJUST SCALES ACCORDINGLY

RMC water and environment

REV	DATE	BY	APVD	DESCRIPTION
1				
2				
3				
4				
5				

DESIGNED M. TAKEMOTO
DRAWN S. JUNG
CHECKED M. NAKAMOTO

SUBMITTED: MARK TAKEMOTO, RMC PROJECT ENGINEER CE-64369
APPROVED: STEVE CLARY, RMC ENGINEER CE-30318

SAUSALITO · MARIN CITY SANITARY DISTRICT

TREATMENT AND WET WEATHER FLOW UPGRADE

FFR PUMP
PLAN AND SECTION

DWG NO M300-1
SHEET NO 153 OF 226
PROJ NO 055-006
DATE NOVEMBER 2016

FILENAME: 055-006-M300-1 11-11-16 12:34pm CTo || XREFS: X-SMCSD-TBLK | MTakemoto-PE-stamp |<<--

Last Saved By: SJung 10-12-16 03:20pm

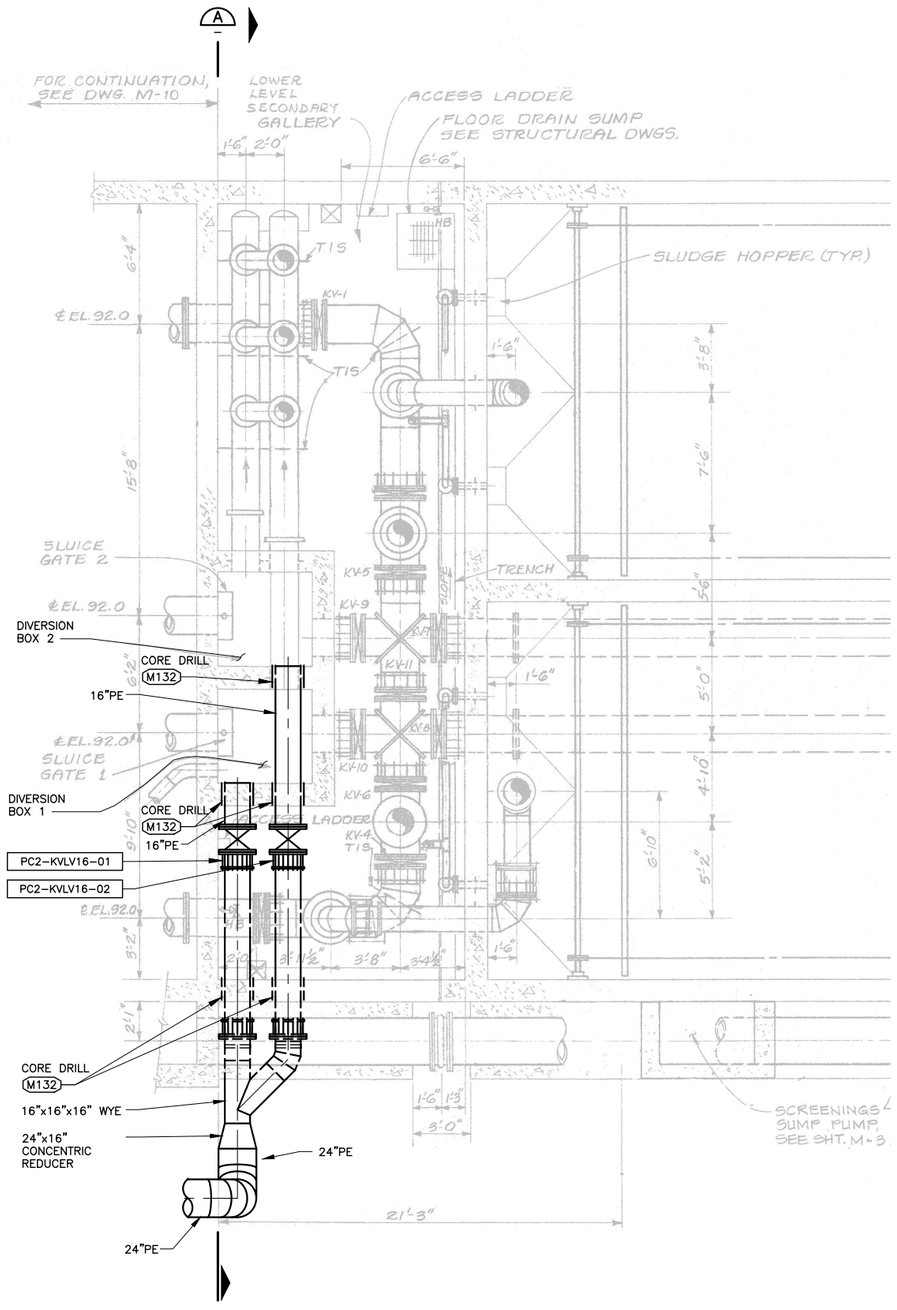

LOWER FFR PUMP ROOM PLAN

1/4" = 1'-0"

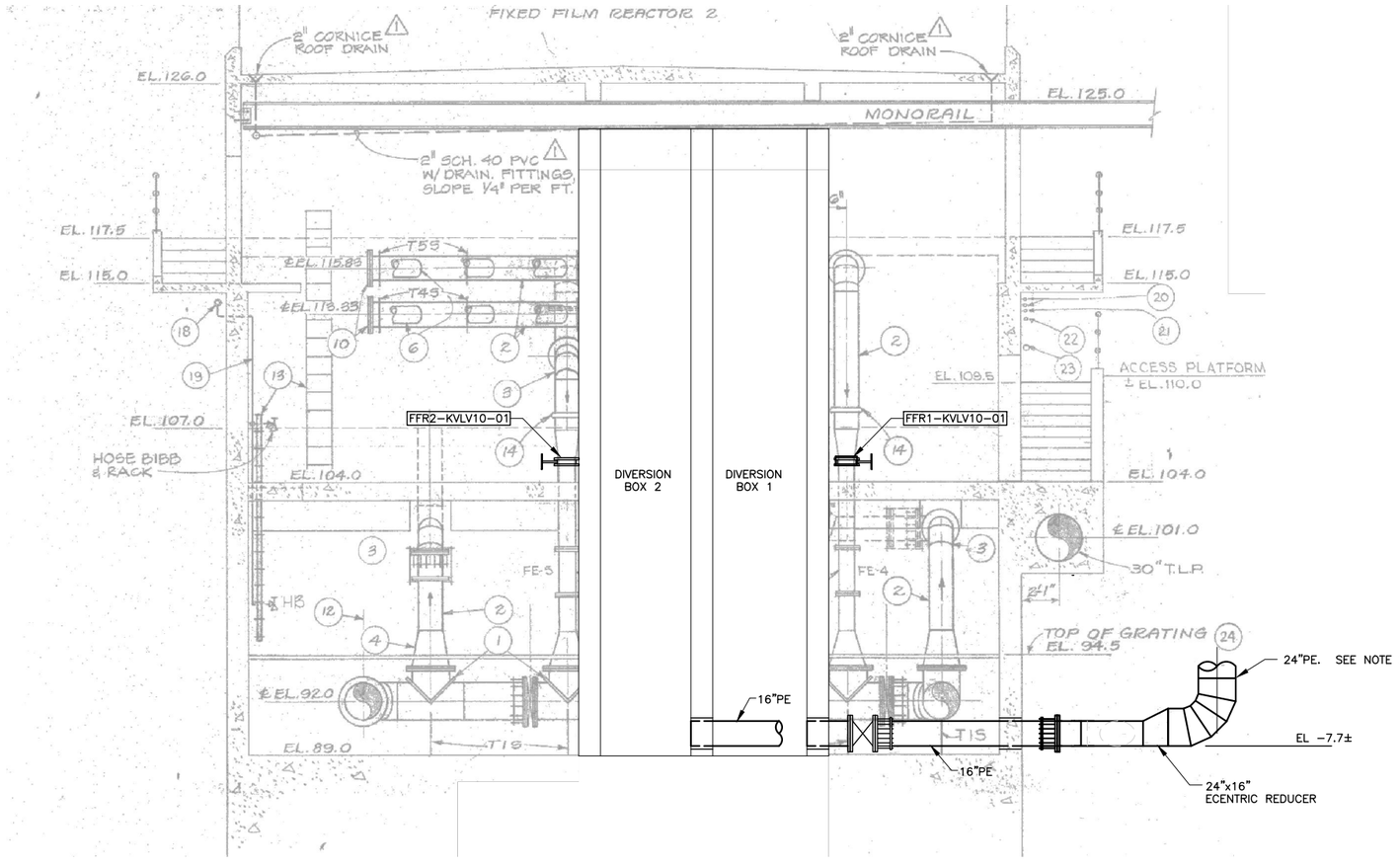

SECTION A

1/4" = 1'-0"

NOTES:

1. CONSTRUCTION SEQUENCING SHALL BE PERFORMED IN ACCORDANCE WITH SECTION 01040.
2. MECHANICAL REFERENCE FROM WASTEWATER PLANT IMPROVEMENTS 1988 RECORD DRAWING (M-4) SET (SEE REFERENCE DRAWINGS).
3. REFERENCE DATUM FOR REFERENCE DRAWINGS IS USGS 1929 MSL+100.
4. CONTRACTOR SHALL VERIFY CLEARANCES AND PIPE ALIGNMENT IN THE FIELD PRIOR TO FABRICATION.
5. WORK INSIDE THE DIVERSION BOX WILL REQUIRE A CONFINED SPACE ENTRY. CONTRACTOR SHALL COMPLY WITH ALL APPLICABLE SAFETY REGULATIONS.
6. CONSTRUCTION IN THIS AREA WILL REQUIRE EXCAVATION UNDER EXISTING DECK WITH NO EQUIPMENT ACCESS. HIGH TIDE IS APPROXIMATELY EL 8.0. WATER MAY BE ENCOUNTERED DURING EXCAVATION.

REGISTERED PROFESSIONAL ENGINEER — MARK W. TAKEMOTO — No. 64369 Exp. 06-30-17 CIVIL — STATE OF CALIFORNIA

0" 1" — VERIFY SCALES — BAR IS ONE INCH LONG ON FULL SIZE DRAWING. IF NOT ONE INCH LONG ON THIS DRAWING, ADJUST SCALES ACCORDINGLY

RMC water and environment

REV	DATE	BY	APVD	DESCRIPTION

DESIGNED	M. TAKEMOTO
DRAWN	S. JUNG
CHECKED	M. NAKAMOTO

SUBMITTED: MARK TAKEMOTO, RMC PROJECT ENGINEER CE-64369

APPROVED: STEVE CLARY, RMC ENGINEER CE-30318

SAUSALITO · MARIN CITY SANITARY DISTRICT

TREATMENT AND WET WEATHER FLOW UPGRADE

DIVERSION BOX PLAN AND SECTIONS

DWG NO	M300-2
SHEET NO	154 OF 226
PROJ NO	055-006
DATE	NOVEMBER 2016

FILENAME: 055-006-M300-2 11-11-16 12:34pm CTo | XREFS: | X-SMCSD-TBLK | X-SitePlan | X-Treatment Plant site plan | X-Topo Survey new | X-Site | MTakemoto-PE-stamp |<<--

Last Saved By: SJung 10-12-16 03:20pm

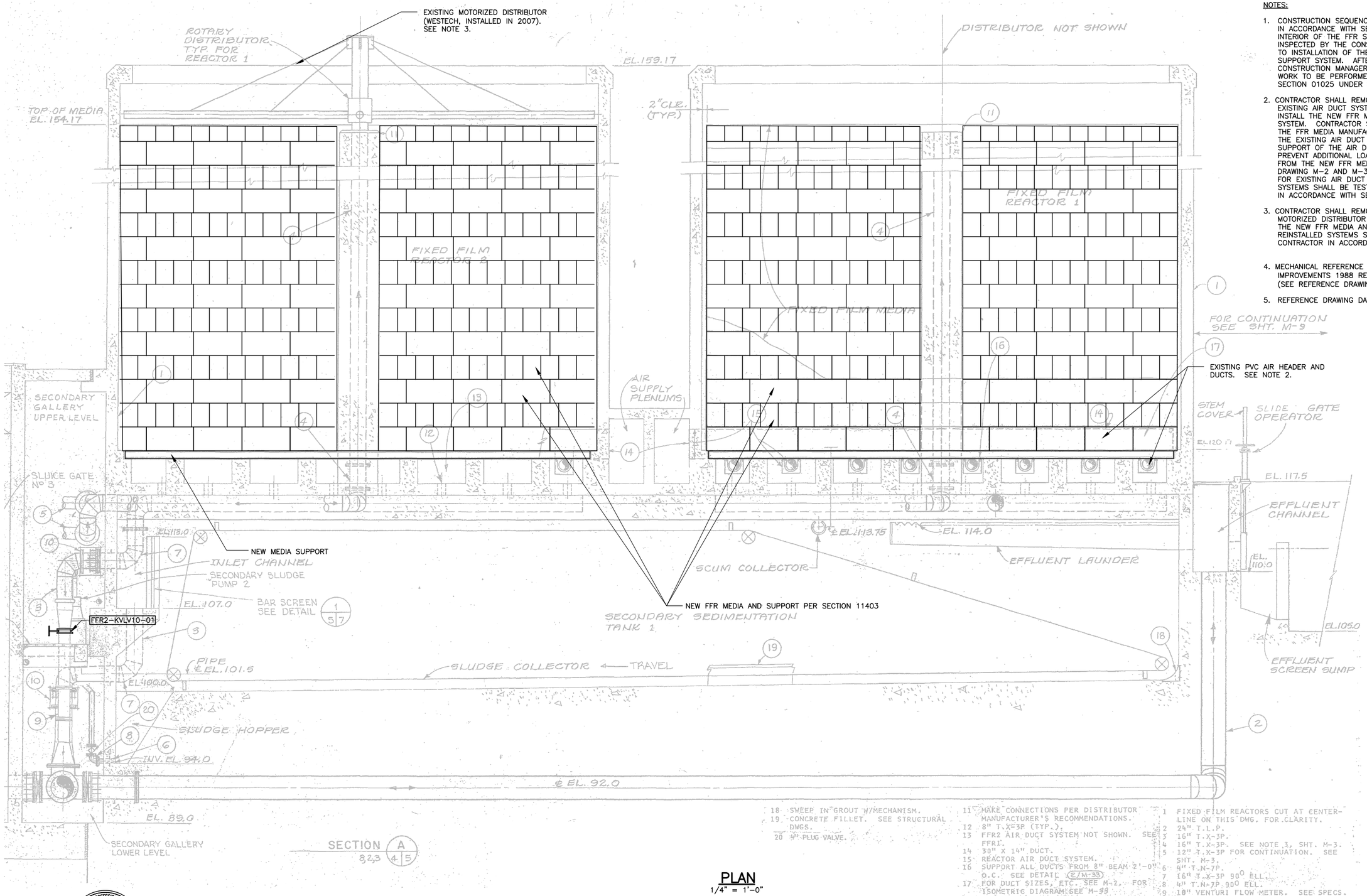

PLAN
1/4" = 1'-0"

NOTES:

1. CONSTRUCTION SEQUENCING SHALL BE PERFORMED IN ACCORDANCE WITH SECTION 01040. THE INTERIOR OF THE FFR STRUCTURE SHALL BE INSPECTED BY THE CONSTRUCTION MANAGER PRIOR TO INSTALLATION OF THE NEW FFR MEDIA AND SUPPORT SYSTEM. AFTER INSPECTION, THE CONSTRUCTION MANAGER MAY REQUIRE ADDITIONAL WORK TO BE PERFORMED AS DESCRIBED IN SECTION 01025 UNDER OPTIONAL BID ITEMS.
2. CONTRACTOR SHALL REMOVE AND REINSTALL THE EXISTING AIR DUCT SYSTEM AS REQUIRED TO INSTALL THE NEW FFR MEDIA AND SUPPORT SYSTEM. CONTRACTOR SHALL COORDINATE WITH THE FFR MEDIA MANUFACTURER TO ACCOMMODATE THE EXISTING AIR DUCT SYSTEM INCLUDING SUPPORT OF THE AIR DUCTS AND PROVISIONS TO PREVENT ADDITIONAL LOADING ONTO THE AIR DUCTS FROM THE NEW FFR MEDIA. SEE REFERENCE DRAWING M-2 AND M-33 FROM 1988 DRAWINGS FOR EXISTING AIR DUCT LAYOUT. REINSTALLED SYSTEMS SHALL BE TESTED BY THE CONTRACTOR IN ACCORDANCE WITH SECTION 01650.
3. CONTRACTOR SHALL REMOVE AND REINSTALL THE MOTORIZED DISTRIBUTOR AS REQUIRED TO INSTALL THE NEW FFR MEDIA AND SUPPORT SYSTEM. REINSTALLED SYSTEMS SHALL BE TESTED BY THE CONTRACTOR IN ACCORDANCE WITH SECTION 01650.
4. MECHANICAL REFERENCE FROM WASTEWATER PLANT IMPROVEMENTS 1988 RECORD DRAWING (M-5) SET (SEE REFERENCE DRAWINGS).
5. REFERENCE DRAWING DATUM USGS 1929 MSL+100.

18 SWEEP IN GROUT W/MECHANISM.
19 CONCRETE FILLET. SEE STRUCTURAL DWGS.
20 4" PLUG VALVE.

11 MAKE CONNECTIONS PER DISTRIBUTOR MANUFACTURER'S RECOMMENDATIONS.
12 8" T.X-3P (TYP.).
13 FFR2 AIR DUCT SYSTEM NOT SHOWN. SEE FFR1.
14 30" X 14" DUCT.
15 REACTOR AIR DUCT SYSTEM.
16 SUPPORT ALL DUCTS FROM 8" BEAM 2'-0" O.C. SEE DETAIL E/M-33
17 FOR DUCT SIZES, ETC. SEE M-2. FOR ISOMETRIC DIAGRAM SEE M-33

1 FIXED FILM REACTORS CUT AT CENTER-LINE ON THIS DWG. FOR CLARITY.
2 24" T.L.P.
3 16" T.X-3P.
4 16" T.X-3P. SEE NOTE 3, SHT. M-3.
5 12" T.X-3P FOR CONTINUATION. SEE SHT. M-3.
6 4" T.N-7P.
7 16" T.X-3P 90° ELL.
8 4" T.N-7P 90° ELL.
9 10" VENTURI FLOW METER. SEE SPECS.
10 16" F.C.A. W/ RESTRAINING RODS.

REGISTERED PROFESSIONAL ENGINEER — MARK W. TAKEMOTO — No. 64369 — Exp. 06-30-17 — CIVIL — STATE OF CALIFORNIA

0" 1" — VERIFY SCALES — BAR IS ONE INCH LONG ON FULL SIZE DRAWING. IF NOT ONE INCH LONG ON THIS DRAWING, ADJUST SCALES ACCORDINGLY

RMC water and environment

REV	DATE	BY	APVD	DESCRIPTION
△				
△				
△				
△				
△				

DESIGNED M. TAKEMOTO
DRAWN S. JUNG
CHECKED M. NAKAMOTO

SUBMITTED: MARK TAKEMOTO, RMC PROJECT ENGINEER CE-64369
APPROVED: STEVE CLARY, RMC ENGINEER CE-30318

SAUSALITO · MARIN CITY SANITARY DISTRICT

TREATMENT AND WET WEATHER FLOW UPGRADE

FIXED FILM REACTOR SECTION

DWG NO M300-3
SHEET NO 155 OF 226
PROJ NO 055-006
DATE NOVEMBER 2016

FILENAME: 055-006-M300-3 11-11-16 12:35pm CTo || XREFS: | X-SMCSD-TBLK | MTakemoto-PE-stamp |<--

Last Saved By: SJung 10-12-16 03:20pm

NOTES:

1. NOT ALL EXISTING PIPING SHOWN. CONTRACTOR SHALL FIELD VERIFY PIPE ALIGNMENTS.
2. CONTRACTOR SHALL COORDINATE AND CONFIRM ALL EQUIPMENT DIMENSIONS, CONNECTIONS, AND INSTALLATION REQUIREMENTS.
3. PIPING SHOWN IS LOCATED BELOW THE PROCESS DECK AND ALONG THE SHORELINE, WITH LIMITED ACCESS.
4. INSTALLATION OF THE NEW 30" SE PIPE AND FILTER INFLUENT GATE WILL REQUIRE ISOLATION AND BYPASS OF THE INFLUENT AND EFFLUENT PITS. SEE SECTION 01040.
5. CONTRACTOR SHALL MODIFY EXISTING BRACKET AND GUIDE RAIL ASSEMBLIES AS REQUIRED BY MANUFACTURER TO ATTACH UNIT TO SOUTH WALL OF EFFLUENT PIT. CENTERLINE OF UNIT SHALL BE SET AT ELEVATION 9.20 WITH IMPELLER ORIENTED SOUTH. CONTRACTOR SHALL REINSTALL HOSE ASSEMBLY AND POWER SUPPLY. REINSTALLED SYSTEM SHALL BE TESTED BY CONTRACTOR IN ACCORDANCE WITH SECTION 01650.

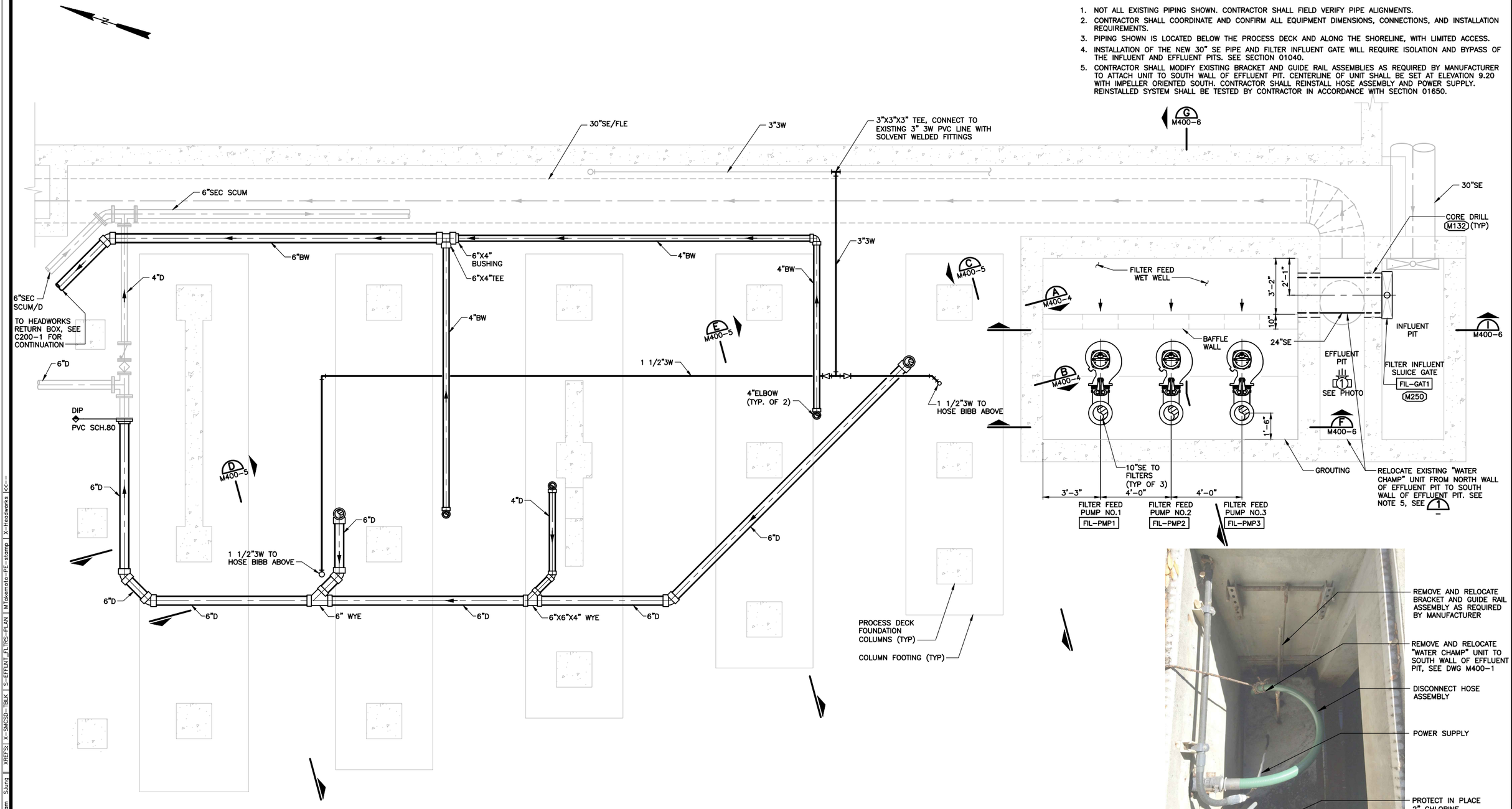

FOUNDATION PLAN @ EL 11.0±

3/8"=1'-0'

DETAIL 1

NTS

REGISTERED PROFESSIONAL ENGINEER — SHELLY A. MASUDA — No. 82686 — Exp. 09-30-18 — CIVIL — STATE OF CALIFORNIA

REGISTERED PROFESSIONAL ENGINEER — MARK W. TAKEMOTO — No. 64369 — Exp. 06-30-17 — CIVIL — STATE OF CALIFORNIA

0" — 1" — VERIFY SCALES — BAR IS ONE INCH LONG ON FULL SIZE DRAWING. IF NOT ONE INCH LONG ON THIS DRAWING, ADJUST SCALES ACCORDINGLY

RMC water and environment

REV	DATE	BY	APVD	DESCRIPTION

DESIGNED	S. MASUDA
DRAWN	J. MAY
CHECKED	M. NAKAMOTO

SUBMITTED: MARK TAKEMOTO, RMC PROJECT ENGINEER CE-64369

APPROVED: STEVE CLARY, RMC ENGINEER CE-30318

SAUSALITO · MARIN CITY SANITARY DISTRICT

TREATMENT AND WET WEATHER FLOW UPGRADE

EFFLUENT FILTERS FOUNDATION PLAN

DWG NO	M400-1
SHEET NO	156 OF 226
PROJ NO	055-006
DATE	NOVEMBER 2016

FILENAME: 0055-006-M400-1 11-18-16 10:37am SJung || XREFS: X-SMCSD-TBLK | S-EFFLNT_FLTRS-PLAN | MTakemoto-PE-stamp | X-Headworks |<<--

Last Saved By: SJung 11-17-16 08:59am

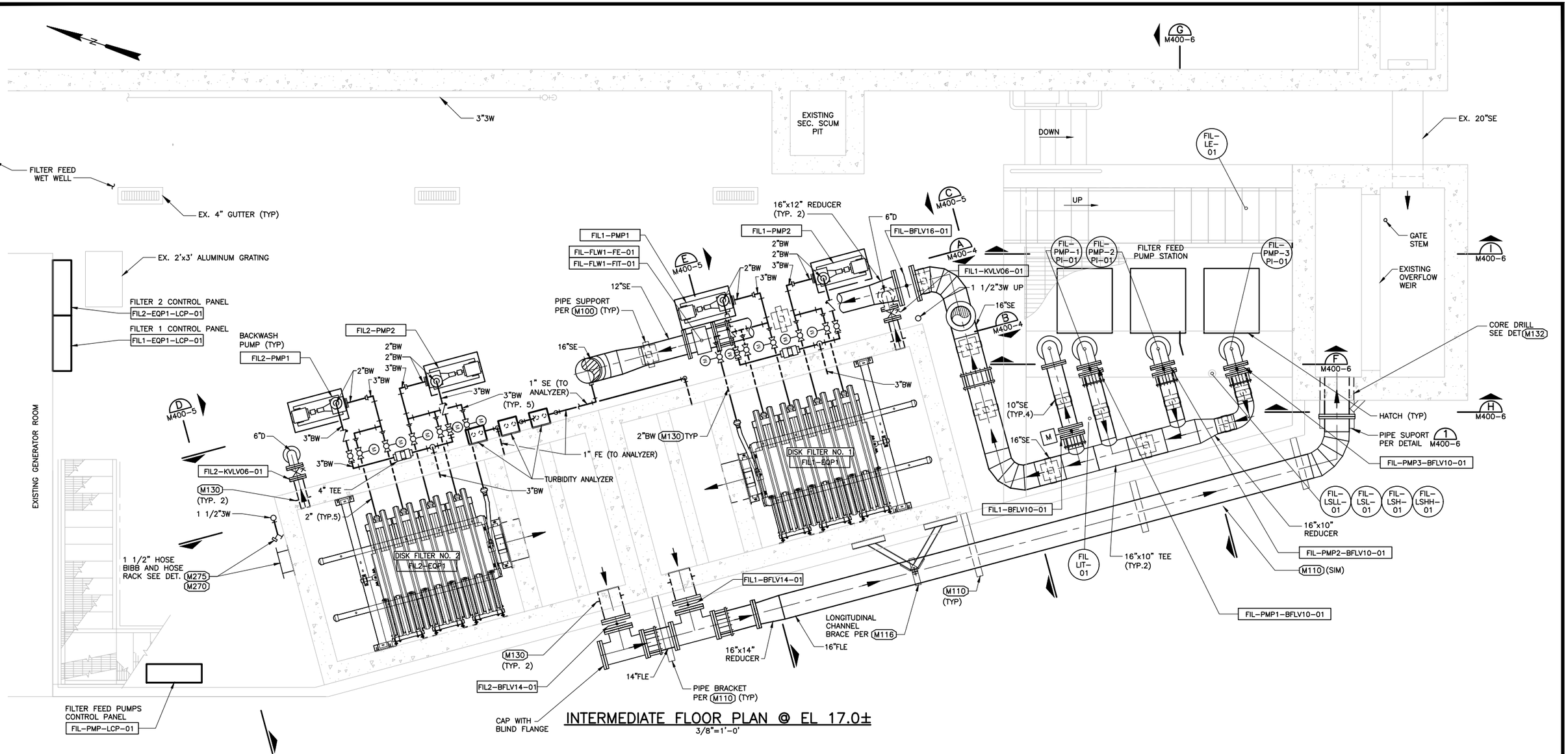

INTERMEDIATE FLOOR PLAN @ EL 17.0±

3/8"=1'-0'

NOTES:

1. CONTRACTOR SHALL COORDINATE AND CONFIRM ALL EQUIPMENT DIMENSIONS, CONNECTIONS, AND INSTALLATION REQUIREMENTS.

REGISTERED PROFESSIONAL ENGINEER — SHELLY A. MASUDA — No. 52686 Exp. 09-30-18 CIVIL — STATE OF CALIFORNIA

REGISTERED PROFESSIONAL ENGINEER — MARK W. TAKEMOTO — No. 64369 Exp. 06-30-17 CIVIL — STATE OF CALIFORNIA

0" 1" — VERIFY SCALES — BAR IS ONE INCH LONG ON FULL SIZE DRAWING. IF NOT ONE INCH LONG ON THIS DRAWING, ADJUST SCALES ACCORDINGLY

RMC water and environment

REV	DATE	BY	APVD	DESCRIPTION
1				
2				
3				
4				
5				

DESIGNED S. MASUDA
DRAWN S. JUNG
CHECKED M. NAKAMOTO

SUBMITTED: MARK TAKEMOTO, RMC PROJECT ENGINEER CE-64369
APPROVED: STEVE CLARY, RMC ENGINEER CE-30318

SAUSALITO · MARIN CITY SANITARY DISTRICT

TREATMENT AND WET WEATHER FLOW UPGRADE

EFFLUENT FILTERS INTERMEDIATE PLAN

DWG NO M400-2
SHEET NO 157 OF 226
PROJ NO 055-006
DATE NOVEMBER 2016

FILENAME: 0055-006-M400-2 11-18-16 04:06pm CTo || XREFS: X-SMCSD-TBLK | S-EFFLNT_FLTRS-PLAN | 0055-006-M400-1 | 0055-006-M400-3 | MTakemoto-PE-stamp |<<--

Last Saved By: CTo 11-18-16 03:04pm

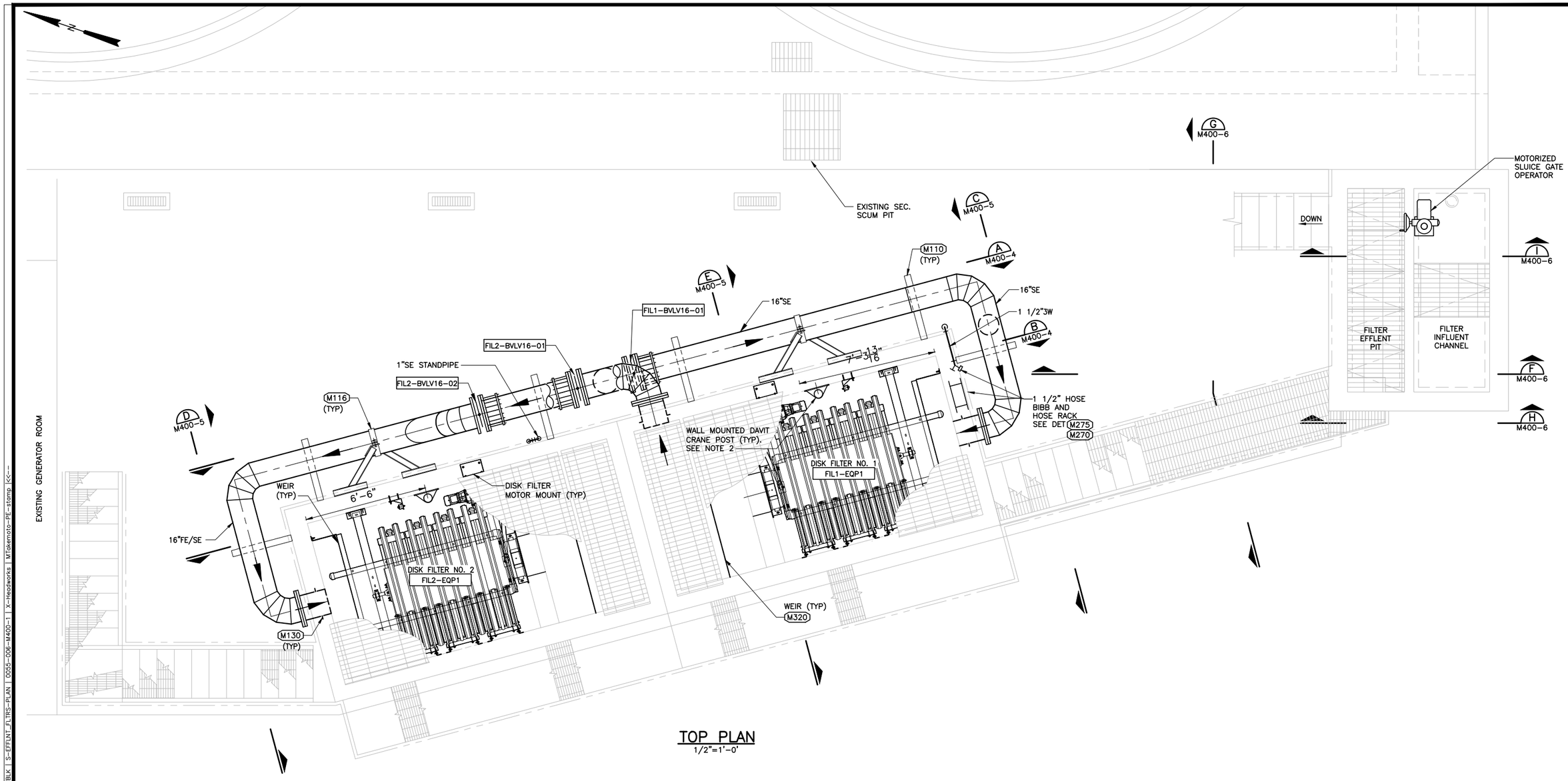

TOP PLAN
1/2"=1'-0'

NOTES:

1. CONTRACTOR SHALL COORDINATE AND CONFIRM ALL EQUIPMENT DIMENSIONS, CONNECTIONS, AND INSTALLATION REQUIREMENTS.
2. CONTRACTOR SHALL PROVIDE AND INSTALL WALL MOUNTED DAVIT CRANE POSTS ON EACH FILTER. CONTRACTOR SHALL PROVIDE ONE DAVIT CRANE FOR USE ON BOTH FILTER UNITS. SEE SECTION 14600.

REGISTERED PROFESSIONAL ENGINEER — SHELLY A. MASUDA — No. 82686 Exp. 09-30-18 CIVIL — STATE OF CALIFORNIA

REGISTERED PROFESSIONAL ENGINEER — MARK W. TAKEMOTO — No. 64369 Exp. 06-30-17 CIVIL — STATE OF CALIFORNIA

0" 1" — VERIFY SCALES — BAR IS ONE INCH LONG ON FULL SIZE DRAWING. IF NOT ONE INCH LONG ON THIS DRAWING, ADJUST SCALES ACCORDINGLY

RMC water and environment

REV	DATE	BY	APVD	DESCRIPTION

DESIGNED	S. MASUDA
DRAWN	J. MAY
CHECKED	M. NAKAMOTO

SUBMITTED: MARK TAKEMOTO — RMC PROJECT ENGINEER CE-64369

APPROVED: STEVE CLARY — RMC ENGINEER CE-30318

SAUSALITO · MARIN CITY SANITARY DISTRICT

TREATMENT AND WET WEATHER FLOW UPGRADE

EFFLUENT FILTERS TOP PLAN

DWG NO	M400-3
SHEET NO	158 OF 226
PROJ NO	055-006
DATE	NOVEMBER 2016

FILENAME: 0055-006-M400-3 11-18-16 04:05pm CTo | XREFs: | X-SMCSD-TBLK | S-EFFLNT_FLTRS-PLAN | 0055-006-M400-1 | X-Headworks | MTakemoto-PE-stamp |<<--

Last Saved By: CTo 11-18-16 04:03pm

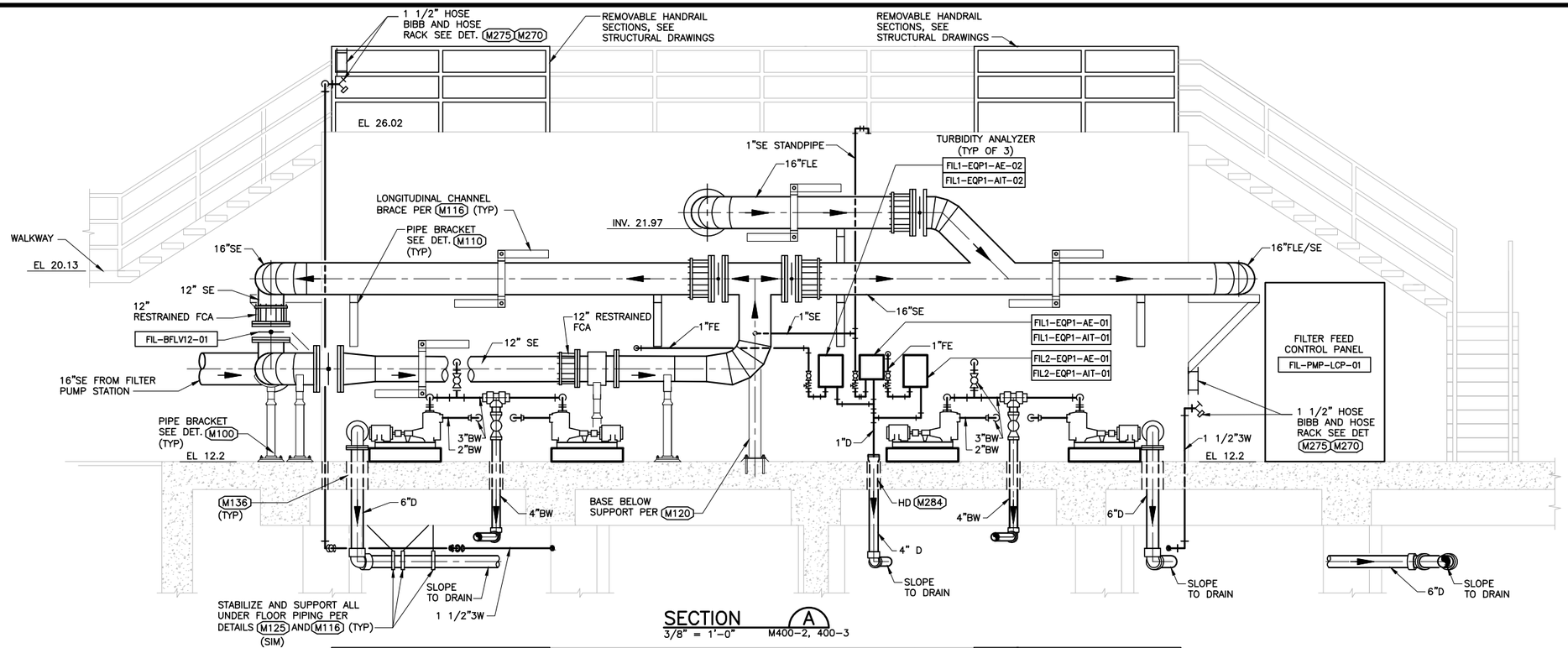

NOTES:

1. CONTRACTOR SHALL COORDINATE AND CONFIRM ALL EQUIPMENT DIMENSIONS, CONNECTIONS, AND INSTALLATION REQUIREMENTS.

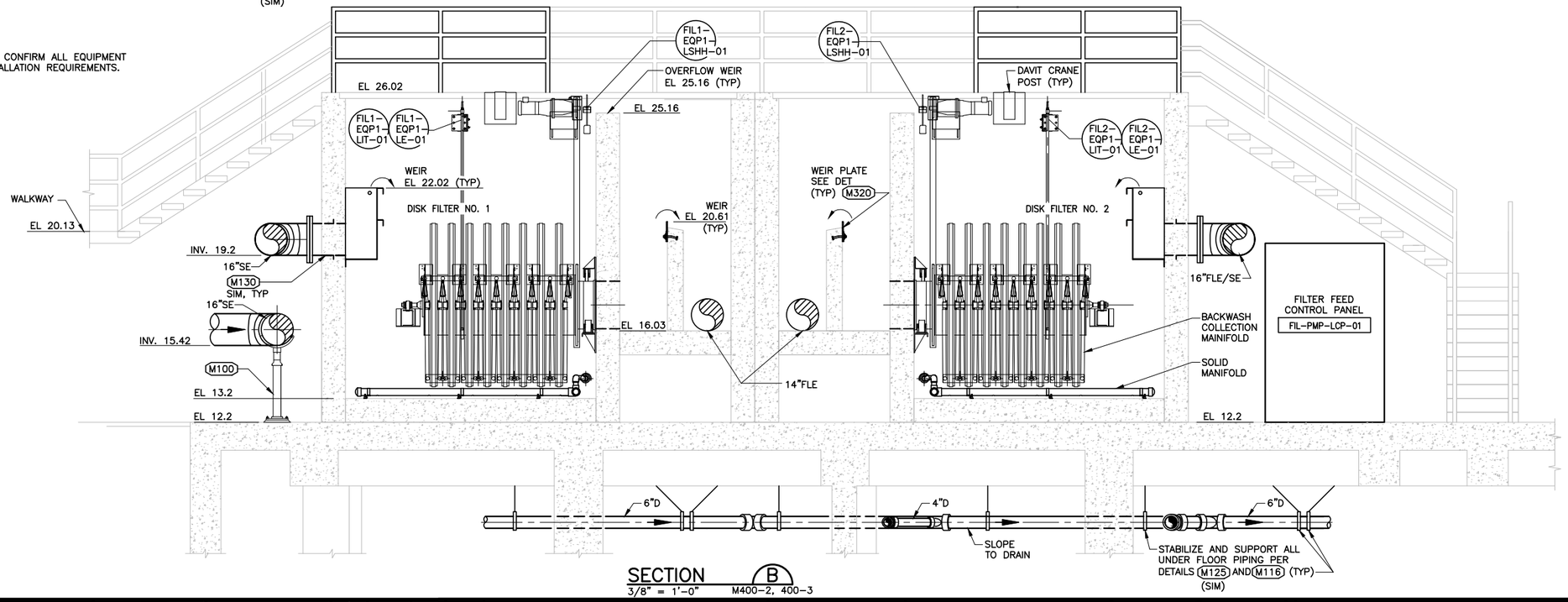

REGISTERED PROFESSIONAL ENGINEER — KELLY A MASUDA — No. 62686 Exp. 09-30-18 CIVIL — STATE OF CALIFORNIA

REGISTERED PROFESSIONAL ENGINEER — MARK W. TAKEMOTO — No. 64369 Exp. 06-30-17 CIVIL — STATE OF CALIFORNIA

0" 1" VERIFY SCALES BAR IS ONE INCH LONG ON FULL SIZE DRAWING. IF NOT ONE INCH LONG ON THIS DRAWING, ADJUST SCALES ACCORDINGLY

RMC water and environment

REV	DATE	BY	APVD	DESCRIPTION

DESIGNED S. MASUDA
DRAWN J. MAY
CHECKED M. NAKAMOTO

SUBMITTED: MARK TAKEMOTO, RMC PROJECT ENGINEER CE-64369

APPROVED: STEVE CLARY, RMC ENGINEER CE-30318

SAUSALITO · MARIN CITY SANITARY DISTRICT

TREATMENT AND WET WEATHER FLOW UPGRADE

EFFLUENT FILTERS SECTIONS

DWG NO M400-4
SHEET NO 159 OF 226
PROJ NO 055-006
DATE NOVEMBER 2016

FILENAME: 0055-006-M400-4 11-18-16 04:09pm CTo || XREFS: X-SMCSD-TBLK | 0055-006-M400-1 | S-EFFLNT_FLTRS-PLAN | S-EFFLNT_FLTRS-SECT | 0055-006-M400-3 | 0055-006-M400-2 | MTakemoto-PE-stamp |<<--

Last Saved By: CTo 11-18-16 04:08pm

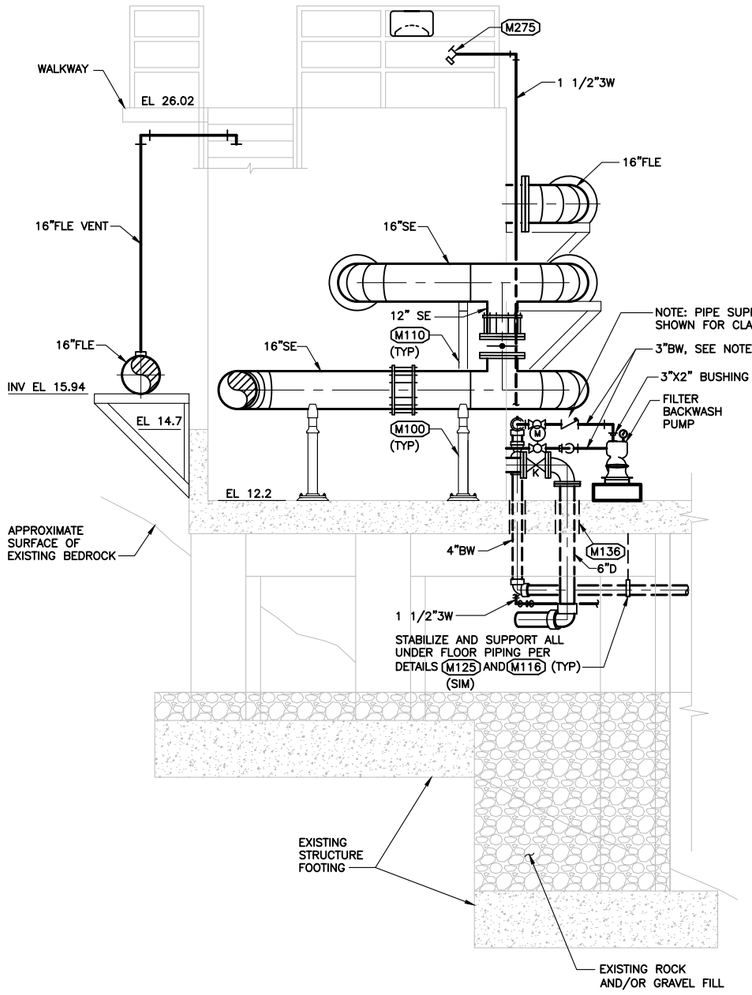

SECTION C
3/8" = 1'-0" M400-2, 400-3

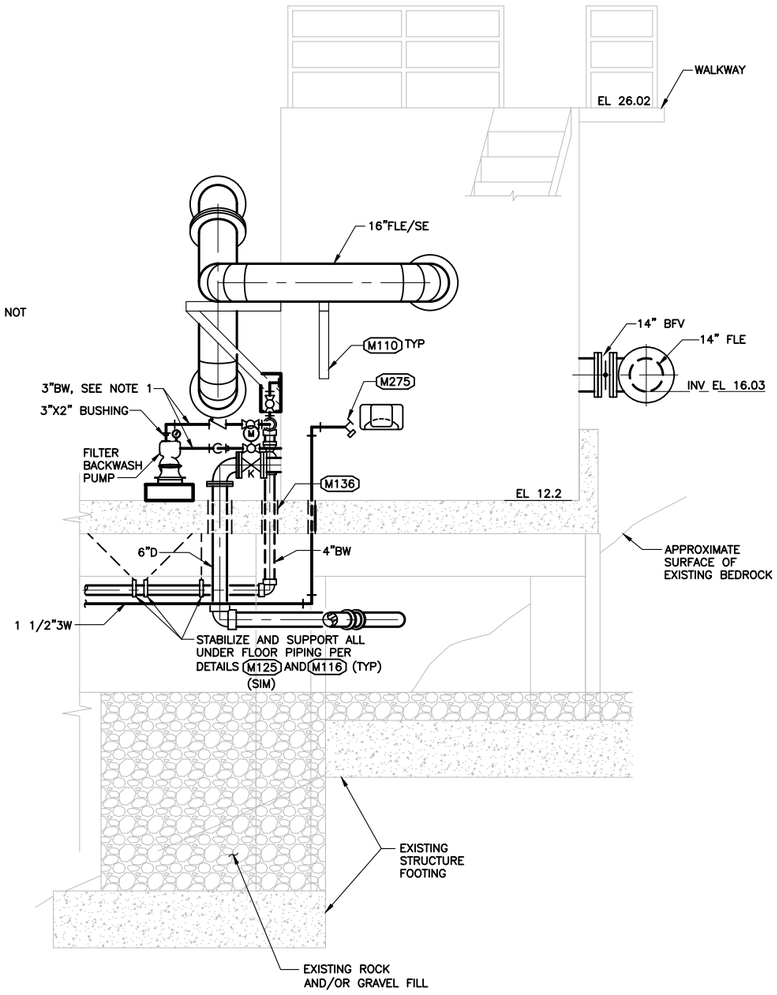

SECTION D
3/8" = 1'-0" M400-2, 400-3

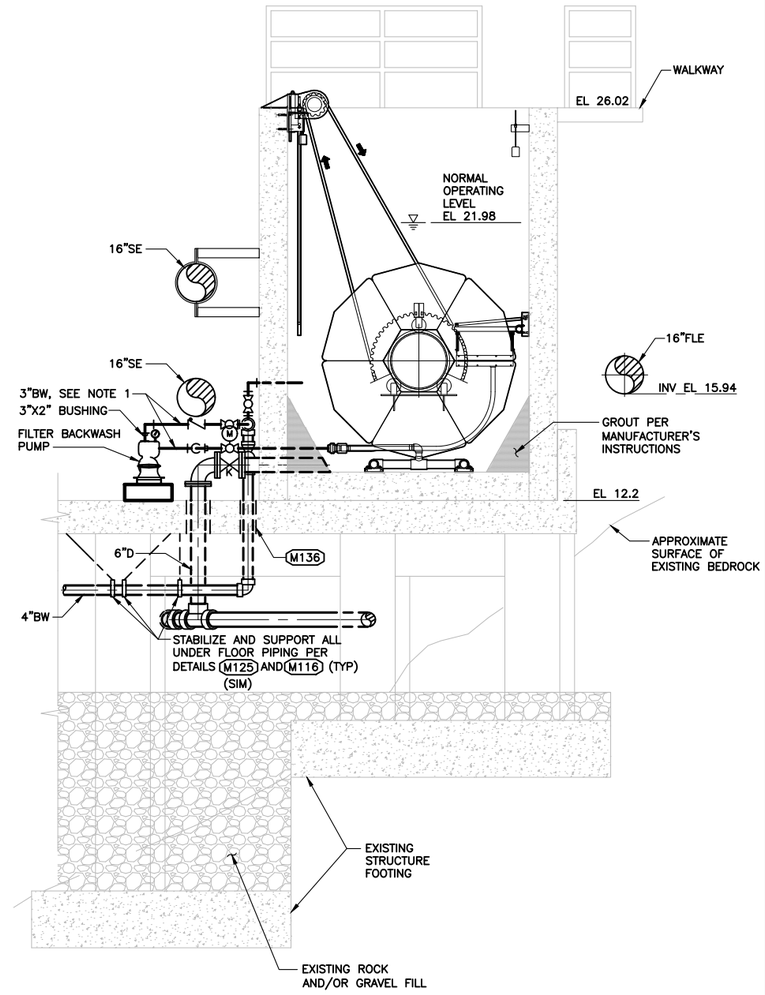

SECTION E
3/8" = 1'-0" M400-2, 400-3

NOTES:

1. SUPPORT BW PIPING PER DETAIL M108 AS REQUIRED.

REGISTERED PROFESSIONAL ENGINEER — SHELLY A. MASUDA — No. 82686 Exp. 09-30-18 CIVIL — STATE OF CALIFORNIA

REGISTERED PROFESSIONAL ENGINEER — MARK W. TAKEMOTO — No. 64369 Exp. 06-30-17 CIVIL — STATE OF CALIFORNIA

0" 1" — VERIFY SCALES — BAR IS ONE INCH LONG ON FULL SIZE DRAWING. IF NOT ONE INCH LONG ON THIS DRAWING, ADJUST SCALES ACCORDINGLY

RMC water and environment

REV	DATE	BY	APVD	DESCRIPTION

DESIGNED S. MASUDA
DRAWN J. MAY
CHECKED M. NAKAMOTO

SUBMITTED: MARK TAKEMOTO, RMC PROJECT ENGINEER CE-64369

APPROVED: STEVE CLARY, RMC ENGINEER CE-30318

SAUSALITO · MARIN CITY SANITARY DISTRICT

TREATMENT AND WET WEATHER FLOW UPGRADE

EFFLUENT FILTERS SECTIONS

DWG NO M400-5
SHEET NO 160 OF 226
PROJ NO 055-006
DATE NOVEMBER 2016

FILENAME: 0055-006-M400-5 11-18-16 10:53am SJung | XREFS: X-SMCSD-TBLK | 0055-006-M400-6 | 0055-006-M400-1 | 0055-006-M400-2 | 0055-006-M400-3 | MTakemoto-PE-stamp |<c--

Last Saved By: SJung 10-12-16 02:54pm

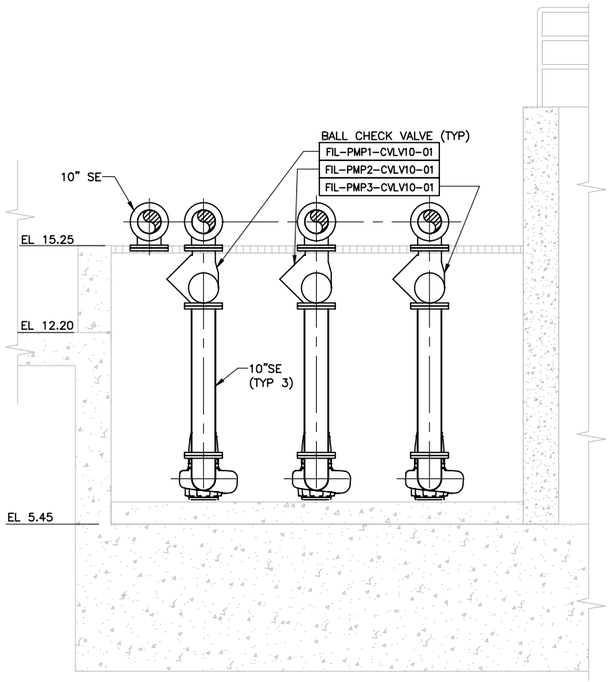

SECTION F
3/8" = 1'-0" M400-1, 400-2, 400-3

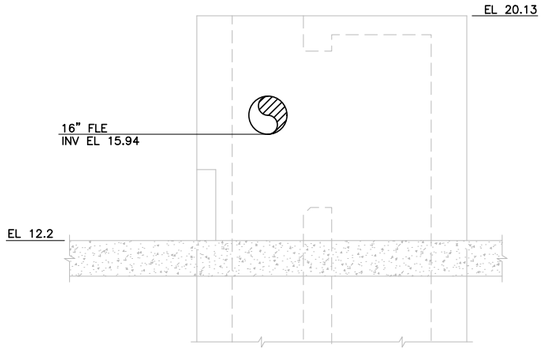

SECTION H
3/8" = 1'-0" 400-2, 400-3

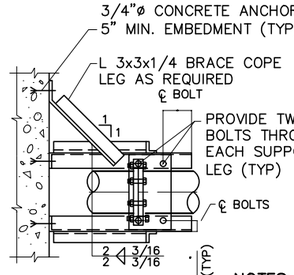

PLAN

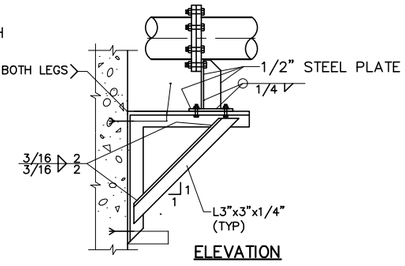

ELEVATION

NOTES:
1. PIPE SUPPORT IS TO BE USED FOR 4"ø AND LARGER PIPE.
2. MAX. ALLOWABLE VERTICAL LOAD=900 LBS.
3. ALL MAT'L SHALL BE STAINLESS STEEL IF SUPPORT IS SUBMERGED OR LOCATED BELOW THE TOP OF WALL IN A WATER BEARING STRUCTURE. IN ALL OTHER AREAS, THE MAT'L SHALL BE HOT-DIP GAL. STEEL UNLESS OTHERWISE INDICATED ON THE DRAWINGS.
4. FIELD PAINT GALVANIZED STEEL PER THE SPECIFICATIONS.

PIPE SUPPORT 1
NTS M400-2

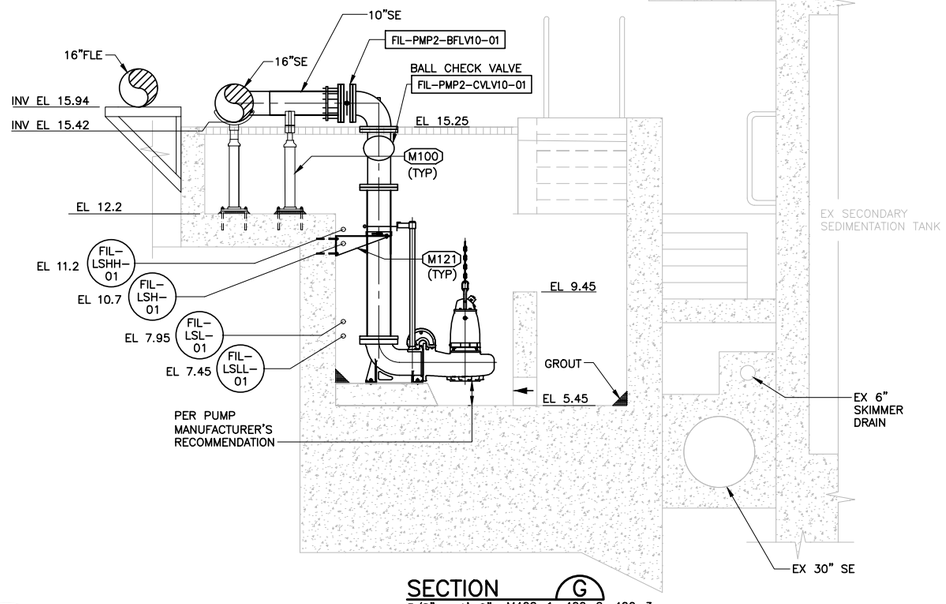

SECTION G
3/8" = 1'-0" M400-1, 400-2, 400-3

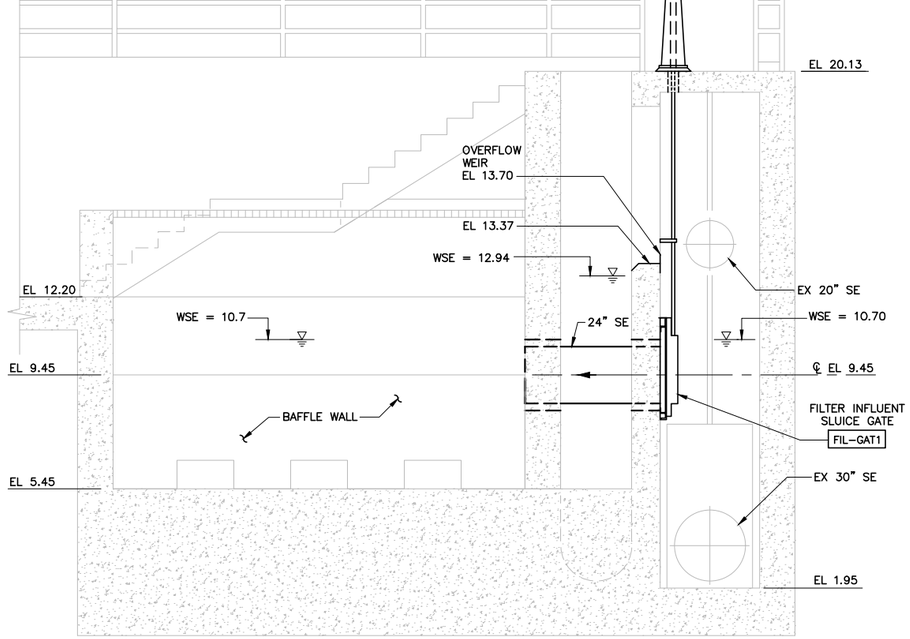

SECTION I
3/8" = 1'-0" M400-1, 400-2, 400-3

REGISTERED PROFESSIONAL ENGINEER — SHELLY A. MASUDA — No. 82686 Exp. 09-30-18 CIVIL — STATE OF CALIFORNIA

REGISTERED PROFESSIONAL ENGINEER — MARK W. TAKEMOTO — No. 64369 Exp. 06-30-17 CIVIL — STATE OF CALIFORNIA

0" 1" — VERIFY SCALES BAR IS ONE INCH LONG ON FULL SIZE DRAWING. IF NOT ONE INCH LONG ON THIS DRAWING, ADJUST SCALES ACCORDINGLY

RMC water and environment

REV	DATE	BY	APVD	DESCRIPTION

DESIGNED S. MASUDA
DRAWN J. MAY
CHECKED M. NAKAMOTO

SUBMITTED: MARK TAKEMOTO, RMC PROJECT ENGINEER CE-64369
APPROVED: STEVE CLARY, RMC ENGINEER CE-30318

SAUSALITO · MARIN CITY SANITARY DISTRICT

TREATMENT AND WET WEATHER FLOW UPGRADE

EFFLUENT FILTERS SECTIONS

DWG NO M400-6
SHEET NO 161 OF 226
PROJ NO 055-006
DATE NOVEMBER 2016

FILENAME: 0055-006-M400-6 11-18-16 04:08pm CTo || XREFs: X-SMCSD-TBLK | 0055-006-M400-1 | S-EFFLNT_FLTRS-PLAN | MTakemoto-PE-stamp | X-Headworks

Last Saved By: CTo 11-18-16 03:26pm

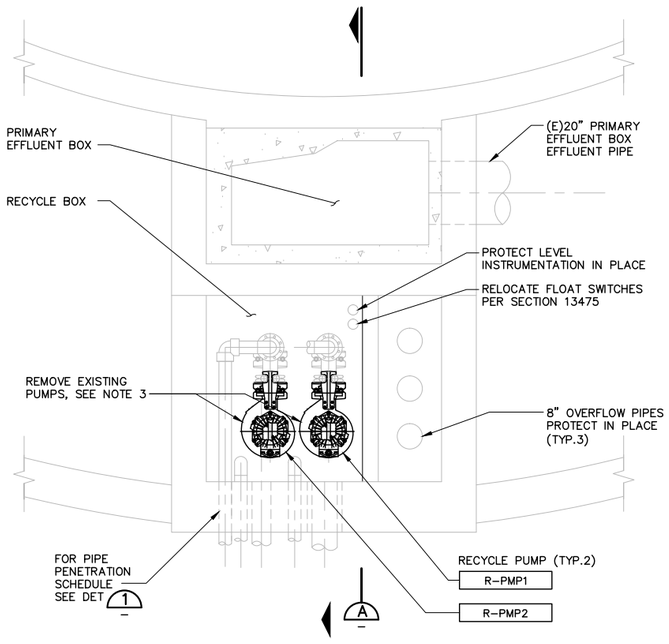

PLAN AT EL 11.7
1/2" = 1'-0"

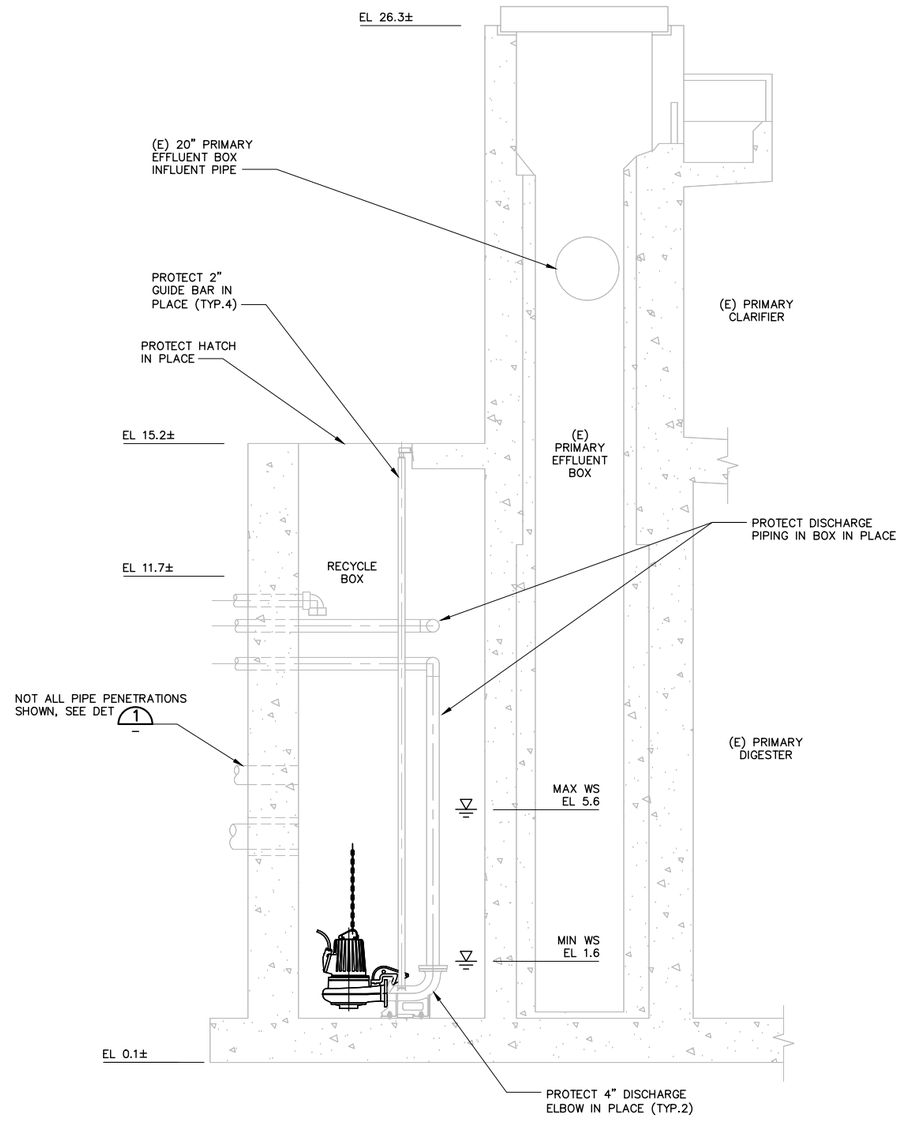

SECTION A
1/2" = 1'-0"

EXISTING RECYCLE BOX PIPE PENETRATION SCHEDULE			
PIPE SIZE	QUANTITY	ACTION	SERVICE
4"	1	SEE NOTE 2	BATHROOM
4"	2	SEE NOTE 1	SCREW PRESS DRAIN
6"	1	SEE NOTE 2	STORM DRAIN
4"	2	SEE NOTE 2	RECYCLE PUMP DISCHARGE
6"	1	SEE NOTE 1	EFFLUENT FILTERS DRAIN
6"	1	SEE NOTE 1	EFFLUENT SCREEN RETURN/BATHROOM/LAB SINK
8"	1	SEE NOTE 3	DEWATERING BLDG DRAIN

NOTES:

1. PROTECT (E) PIPE PENETRATION IN PLACE.
2. PROTECT (E) PIPE PENETRATION IN PLACE. CONNECT TO NEW PIPE CONNECTION OUTSIDE OF RECYCLE BOX. SEE C200-1.
3. DEMOLISH EXISTING 8" PIPING AND APPURTENANCES. CUT PIPE FLUSH WITH BOX AND PLUG WITH CONCRETE.

DETAIL 1
NOT TO SCALE

NOTES:

1. ALL DIMENSIONS REFERENCING EXISTING STRUCTURES ARE APPROXIMATE. CONTRACTOR SHALL VERIFY IN FIELD.
2. CONSTRUCTION SEQUENCING SHALL BE PERFORMED IN ACCORDANCE WITH SECTION 01040.
3. REMOVE EXISTING PUMPS AND REPLACE WITH NEW SUBMERSIBLE PUMPS. NEW PUMPS SHALL BE IDENTICAL IN FRAME SIZE TO EXISTING PUMPS AND SHALL UTILIZE EXISTING ELBOWS AND GUIDE RAILS.

FILENAME: 0055-006-M500-1 11-11-16 12:39pm CTo || XREFS:| X-SMCSD-TBLK | MTakemoto-PE-stamp |<<--

REGISTERED PROFESSIONAL ENGINEER SHELLY A. MASUDA No. 82686 Exp. 09-30-18 CIVIL STATE OF CALIFORNIA

REGISTERED PROFESSIONAL ENGINEER MARK W. TAKEMOTO No. 64369 Exp. 06-30-17 CIVIL STATE OF CALIFORNIA

0" 1"
VERIFY SCALES
BAR IS ONE INCH LONG ON FULL SIZE DRAWING. IF NOT ONE INCH LONG ON THIS DRAWING, ADJUST SCALES ACCORDINGLY

RMC water and environment

REV	DATE	BY	APVD	DESCRIPTION

DESIGNED S. MASUDA
DRAWN J. MAY
CHECKED M. NAKAMOTO

SUBMITTED: MARK TAKEMOTO
RMC PROJECT ENGINEER CE-64369
APPROVED: STEVE CLARY
RMC ENGINEER CE-30318

SAUSALITO · MARIN CITY SANITARY DISTRICT

TREATMENT AND WET WEATHER FLOW UPGRADE

RECYCLE BOX PLANS AND SECTIONS

DWG NO M500-1
SHEET NO 162 OF 226
PROJ NO 055-006
DATE NOVEMBER 2016

Last Saved By: SJung 10-12-16 02:59pm

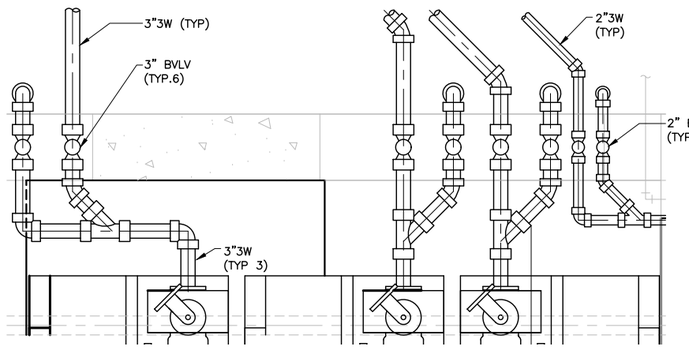

DETAIL 1
1/4" = 1'-0"

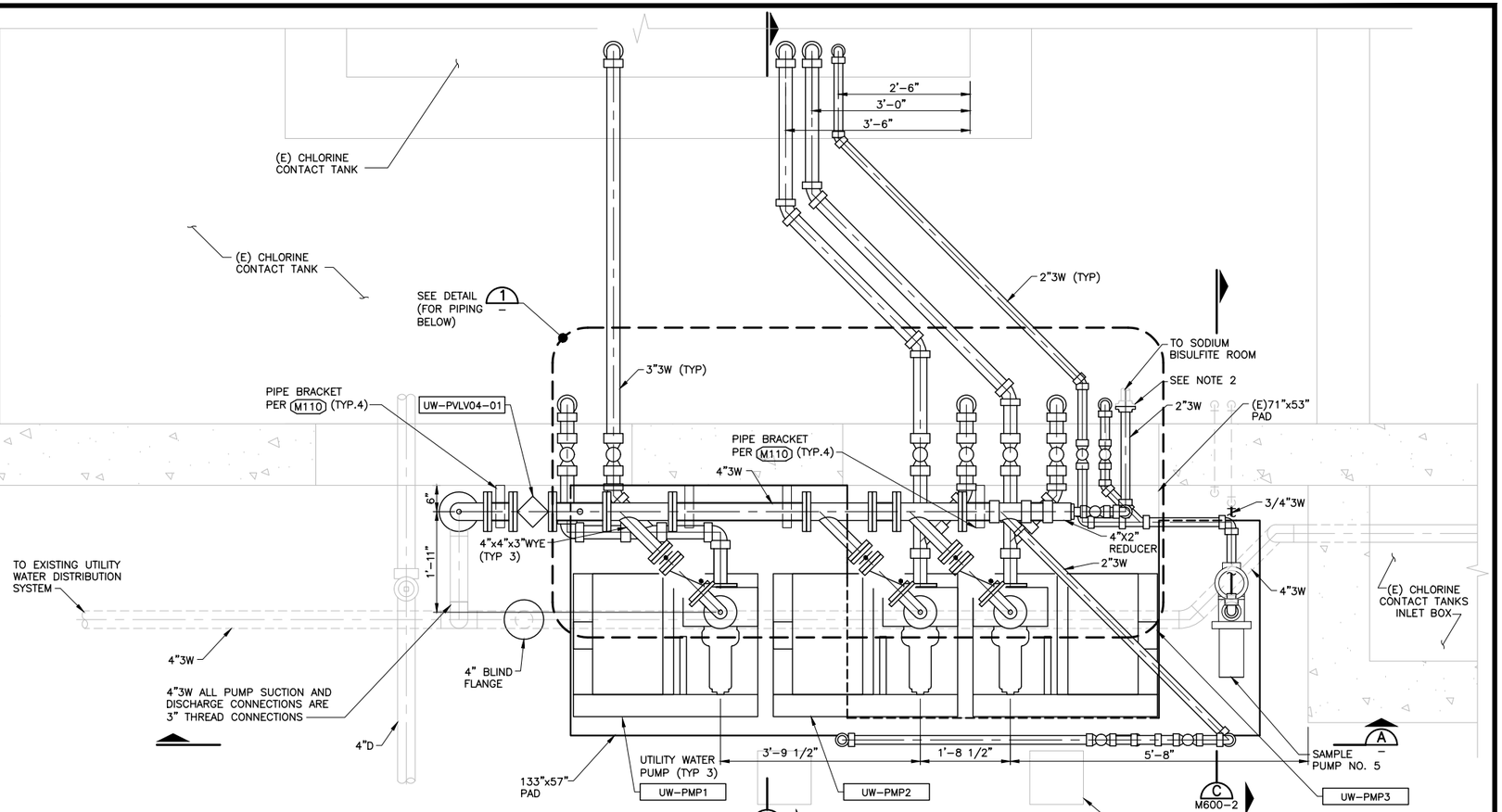

TOP PLAN
3/4" = 1'-0"

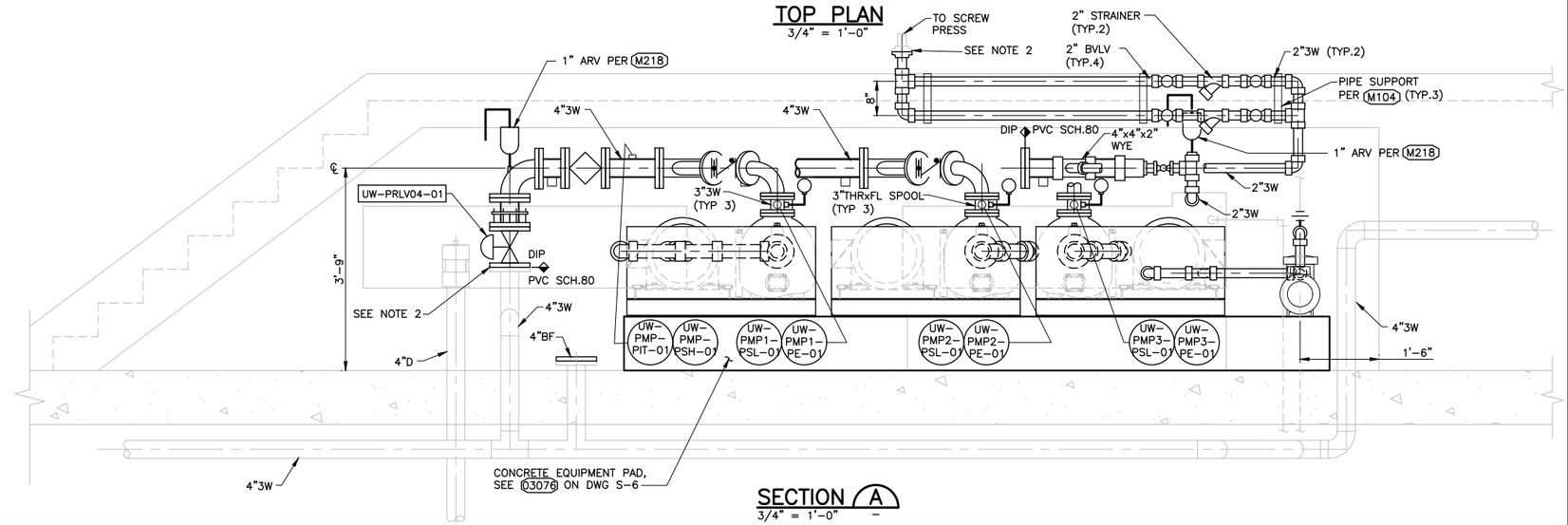

SECTION A
3/4" = 1'-0"

NOTES:

1. ALL DIMENSIONS REFERENCING EXISTING STRUCTURES ARE APPROXIMATE. CONTRACTOR SHALL VERIFY IN FIELD.
2. CONNECT TO (E) PIPE.
3. NOT ALL EXISTING PIPING SHOWN. CONTRACTOR SHALL FIELD VERIFY PIPE ALIGNMENTS.

REGISTERED PROFESSIONAL ENGINEER — SHELLY A. MASUDA — No. 62686 Exp. 09-30-18 CIVIL — STATE OF CALIFORNIA

REGISTERED PROFESSIONAL ENGINEER — MARK W. TAKEMOTO — No. 64369 Exp. 06-30-17 CIVIL — STATE OF CALIFORNIA

0" — 1" — VERIFY SCALES — BAR IS ONE INCH LONG ON FULL SIZE DRAWING. IF NOT ONE INCH LONG ON THIS DRAWING, ADJUST SCALES ACCORDINGLY

RMC water and environment

REV	DATE	BY	APVD	DESCRIPTION
1				
2				
3				
4				
5				

DESIGNED	S. MASUDA
DRAWN	J. MAY
CHECKED	M. NAKAMOTO

SUBMITTED: MARK TAKEMOTO, RMC PROJECT ENGINEER CE-64369

APPROVED: STEVE CLARY, RMC ENGINEER CE-30318

SAUSALITO · MARIN CITY SANITARY DISTRICT

TREATMENT AND WET WEATHER FLOW UPGRADE

UTILITY WATER PUMP STATION PLAN AND SECTION

DWG NO M600-1
SHEET NO 163 OF 226
PROJ NO 055-006
DATE NOVEMBER 2016

FILENAME: 0055-006-M600-1 11-11-16 12:40pm CTo | XREFS: | X-SMCSD-TBLK | MTakemoto-PE-stamp |<<--

Last Saved By: SJung 10-12-16 02:58pm

NOTES:

1. ALL DIMENSIONS REFERENCING EXISTING STRUCTURES ARE APPROXIMATE. CONTRACTOR SHALL VERIFY IN FIELD.
2. CONNECT TO (E) PIPE.
3. NOT ALL EXISTING PIPING SHOWN. CONTRACTOR SHALL FIELD VERIFY PIPE ALIGNMENTS.

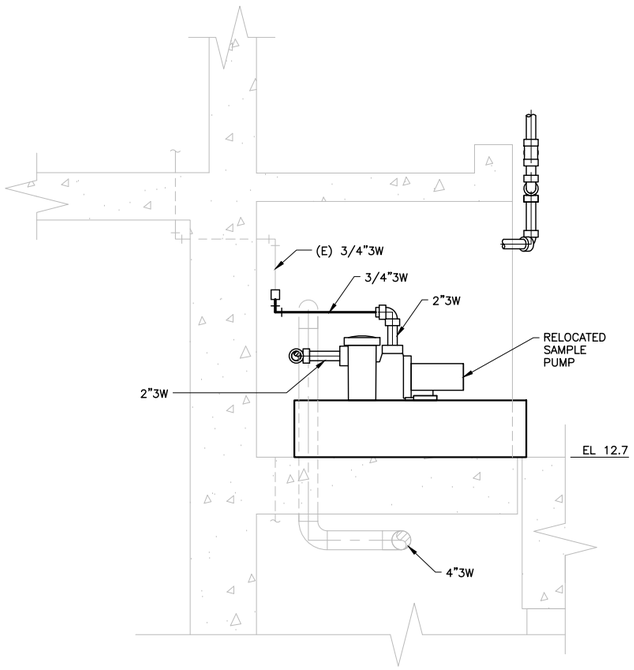

SECTION C
3/4" = 1'-0"

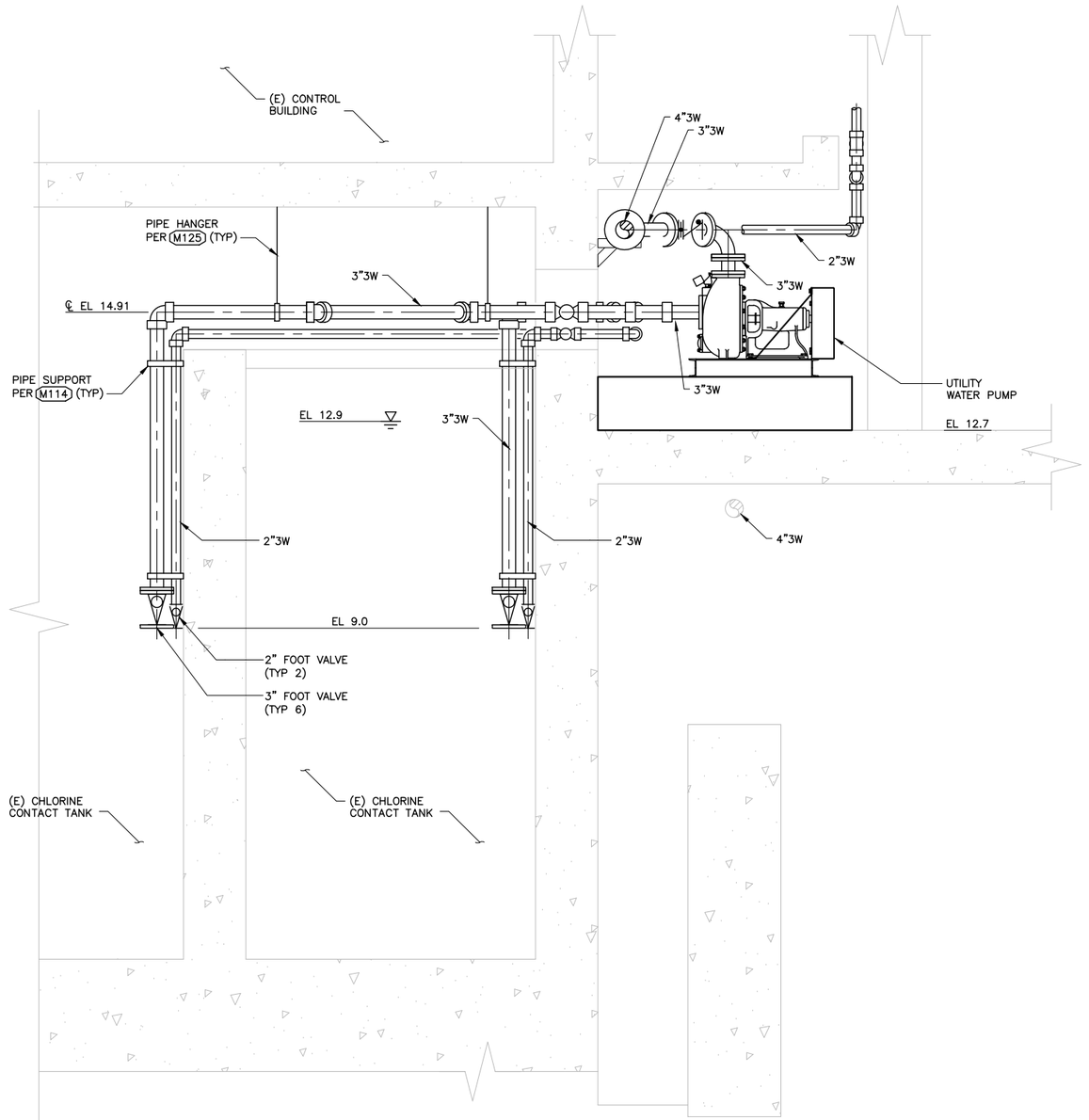

SECTION B
3/4" = 1'-0"

FILENAME: 0055-006-M600-2 11-11-16 12:40pm CTo || XREFS: X-SMCSD-TBLK | 0055-006-M600-1 | MTakemoto-PE-stamp |<<--

Last Saved By: SJung 10-12-16 02:59pm

REGISTERED PROFESSIONAL ENGINEER — SHELLY A. MASUDA — No. 62686 — Exp. 09-30-18 — CIVIL — STATE OF CALIFORNIA

REGISTERED PROFESSIONAL ENGINEER — MARK W. TAKEMOTO — No. 64369 — Exp. 06-30-17 — CIVIL — STATE OF CALIFORNIA

0" 1" — VERIFY SCALES — BAR IS ONE INCH LONG ON FULL SIZE DRAWING. IF NOT ONE INCH LONG ON THIS DRAWING, ADJUST SCALES ACCORDINGLY

RMC water and environment

REV	DATE	BY	APVD	DESCRIPTION

DESIGNED	S. MASUDA
DRAWN	J. MAY
CHECKED	M. NAKAMOTO

SUBMITTED: MARK TAKEMOTO, RMC PROJECT ENGINEER CE-64369

APPROVED: STEVE CLARY, RMC ENGINEER CE-30318

SAUSALITO · MARIN CITY SANITARY DISTRICT

TREATMENT AND WET WEATHER FLOW UPGRADE

UTILITY WATER PUMP STATION SECTION

DWG NO	M600-2
SHEET NO	164 OF 226
PROJ NO	055-006
DATE	NOVEMBER 2016

CONTROL DIAGRAM SYMBOLS

120V / 120V — CONTROL TRANSFORMER, PRIMARY AND SECONDARY VOLTAGES SHOWN, SIZE AS SHOWN OR SPECIFIED

40A — CIRCUIT BREAKER, THERMAL–MAGNETIC, 3 POLE, UON, RATING IN AMPS

DESIGNATES PLC INPUT TERMINATION OR CONTROL PANEL TERMINATION

ID — FUSE MODIFIERS:
CLF = CURRENT LIMITING FUSE
DE = DUAL ELEMENT
F = CLASS F

ID — PUSHBUTTON, MOMENTARY CONTACT, NORMALLY OPEN

ID — PUSHBUTTON, MOMENTARY CONTACT, NORMALLY CLOSED

ID — STOP PUSHBUTTON WITH LOCKOUT

O, H, A, X — SELECTOR SWITCH 3 POSITION MAINTAINED CONTACT.
X = CONTACTS CLOSED

LINE, L — INDICATING LIGHT PUSH TO TEST, TEST VOLTAGE TERMINAL SHOWN.
LENS COLOR (L):
A = AMBER
B = BLUE
G = GREEN
R = RED
W = WHITE

2 CR — CONTROL RELAY OPERATING COIL.
FUNCTION:
CR= CONTROL RELAY
U = UNLATCH
L = LATCH

OL — THERMAL OVERLOAD RELAY

2CR 2CR — OUTPUT CONTACTS

2 TR — TIMING RELAY OPERATING COIL
ON/OFF/DELAY
RANGE: SEC/MIN
SET: SEC/MIN

E–STOP SWITCH

2–WAY SOLENOID VALVE

NORMALLY OPEN	NORMALLY CLOSE	DEFINITION
OR 2CR	OR 2CR	DELAY ON COIL ENERGIZATION (ON DELAY)
		POSITION (LIMIT) SWITCH
		TEMPERATURE SWITCH
		PRESSURE SWITCH

STANDARD ABBREVIATIONS

A	AMMETER
ATS	AUTOMATIC TRANSFER SWITCH
BCW	BARE COPPER WIRE
CB	CIRCUIT BREAKER
C	CONDUIT
C.O.	CONDUIT ONLY (EMPTY CONDUIT)
CP	CONTROL PANEL
CPT	CONTROL POWER TRANSFORMER
CR	CONTROL RELAY
CS	CONTROL SWITCH
CT	CONTACTOR (HEAVY DUTY)
(E)	EXISTING
FS	FLOAT SWITCH
G OR GND	GROUND
HS	HAND SWITCH
HZ	HERTZ
KVAR	REACTIVE POWER
KW	KILOWATT
KWHR	KILOWATT HOUR
I/O	INPUT/OUTPUT
LOS	LOCKOUT STOP
MTS	MANUAL TRANSFER SWITCH
MCC	MOTOR CONTROL CENTER
MCP	MOTOR CIRCUIT PROTECTOR
MF	MULTI–FUNCTION METER DISPLAY
MIN	MINIMUM
MSGR	MAIN SWITCHGEAR
(N)	NEW
NC	NORMALLY CLOSED
NIC	NOT IN CONTRACT
NO	NORMALLY OPEN
NTS	NOT TO SCALE
PAIR OR PR	TWISTED, SHIELDED PAIRS #16AWG
PB	PULL BOX
PLC	PROGRAMMABLE LOGIC CONTROLLER
QUAD	TWISTED, SHIELDED 4–CONDUCTOR CABLE
PP	POWER POLE
RTD	RESISTANCE THERMAL DETECTOR
RTU	REMOTE TERMINAL UNIT
SCADA	SUPERVISORY CONTROL & DATA ACQUISITION
SS	STAINLESS STEEL (316 UON)
SSRS	SOLID STATE REDUCED VOLTAGE STARTER
SWGR	SWITCHGEAR
HD	HARMONIC DISTORTION
TS	TEMPERATURE SWITCH
UON	UNLESS OTHERWISE NOTED
V	VOLTMETER
VFD	VARIABLE FREQUENCY DRIVE
WP	WEATHER PROOF (NEMA 4X)
XFMR	TRANSFORMER

LIGHTING

FIXTURE IDENTIFICATION:

5 / XX / 2/40 / R / 8'–6"

- NUMBER OF FIXTURES (SHOWN ONLY WHEN REQUIRED FOR CLARITY)
- FIXTURE TYPE REFER TO FIXTURE SCHEDULE TYPE APPLIES TO ALL FIXTURES OF THE SAME SHAPE WITHIN A ROOM OR AREA
- MOUNTING:
  C: CEILING
  R: RECESSED
  PP: POLE
  S: STANCHION
  P: PENDANT
  W: WALL
- MOUNTING HEIGHT, FLOOR TO BOTTOM OF FIXTURE UON. AS HIGH AS POSSIBLE (AHAP)
- NUMBER OF LAMPS/LAMP WATTAGE

LIGHTING FIXTURE SHAPES AND SCALE ARE REPRESENTED WHERE POSSIBLE. THE EXAMPLES SHOWN BELOW ARE TYPICAL APPLICATIONS.

FLUORESCENT FIXTURE

WALL MOUNTED FIXTURE

POLE MOUNTED FIXTURE

EMERGENCY LIGHTING UNIT SELF CONTAINED

MOTORS AND EQUIPMENT

DISCONNECT SWITCH, NON–FUSED, HEAVY DUTY PADLOCKABLE, INDUSTRIAL TYPE

M — M = MOTOR
SV = SOLENOID VALVE
125 = 125HP

FIELD INSTRUMENT

CONTROL STATION (SEE CONTROL DIAGRAMS FOR DEVICES REQUIRED)

TELEPHONE & COMMUNICATION SYSTEMS

TELEPHONE AND COMMUNICATION SYSTEMS: UNLESS OTHERWISE SPECIFIED, TELEPHONE OUTLETS SHALL BE MOUNTED AT SAME HEIGHT AS THE RECEPTACLES, VERIFY.

EXTERNAL LINE OR PLANT PHONE SYSTEM OUTLET

T — TELEPHONE

GROUNDING

GROUND ROD

GROUND ROD WITH GROUND WELL

GROUND CONNECTION, BOLTED TYPE

GROUND CONNECTION, COMPRESSION TYPE

—G— GROUNDING CONDUCTOR, MINIMUM #2/O BARE COPPER

INSTRUMENT CABLE SHIELD GROUND

CIRCUITS AND RACEWAYS

RACEWAY EXPOSED

RACEWAY CONCEALED IN FLOOR SLAB OR UNDERGROUND

RACEWAY TURNED TOWARD THE VIEWER

RACEWAY TURNED DOWN

HH20 — HH: HANDHOLE, MH: MANHOLE

J — JUNCTION BOX

TB — TERMINAL BOX

3#10 AWG, GNDG, 1"C — RACEWAY SIZE WITH CONDUCTOR CONTENTS AND SIZES

LP–1 — CIRCUIT HOMERUN WITH DESTINATION NOTED (2#12, #12 GND MIN.)

T — TELEPHONE SYSTEM CONDUIT WITH PULLING NYLON ROPE

LIGHT CIRCUIT WITH CONDUCTOR QUANTITY INDICATED

IXXX — INSTRUMENTATION CONDUIT

CCXXX — CONTROL CONDUIT

LP1–2XX — POWER CIRCUIT 240V WITH POWER SOURCE IDENTIFICATION (1XX IS 120V)

MCC–HW–P–4XX — POWER CIRCUIT 480V WITH POWER SOURCE IDENTIFICATION

WIRING DEVICES

SWITCHES: UNLESS OTHERWISE SPECIFIED, ALL SWITCHES ARE WALL MOUNTED

$ — TOGGLE SWITCH, SINGLE POLE, 20 AMP

$ $ — GANGED SWITCHES IN COMMON BOX WITH COMMON WALL PLATE

$ A 3 —
- SUPERSCRIPT INDICATES CIRCUIT CONTROLLED: a, b, c, ETC. MAY BE COMBINED WITH CIRCUIT NUMBER: 1a, 4b, ETC.
- SUBSCRIPT MODIFIER INDICATES:
  2 = DOUBLE POLE
  3 = THREE WAY
  4 = FOUR WAY
  K = KEY OPERATED
  MC = MOMENTARY CONTACT, THREE POSITION
  MS = MANUAL (MOTOR) STARTER OR SWITCH
  R = RHEOSTAT (DIMMER, SPEED CONTROL)
  WP = WEATHER PROOF

RECEPTACLES: UNLESS OTHERWISE SPECIFIED, ALL RECEPTACLES ARE 125 VOLT, SINGLE PHASE, STRAIGHT BLADE, NON LOCKING, GROUNDING STYLE.

DUPLEX RECEPTACLE, 20 AMP, 3 WIRE.

RECEPTACLE MODIFIERS:
WP = WEATHER PROOF
GFI = GROUND FAULT CIRCUIT INTERRUPTER
H = HAZARDOUS AREA–EXPLOSION PROOF

DOUBLE DUPLEX RECEPTACLE

MISCELLANEOUS

GROUND CONNECTION

RTU OUTPUT

E150 TYP — TYPICAL DETAIL DESIGNATION

X / Y — DETAIL DESIGNATION
DETAIL NUMBER
WHERE DETAIL IS SHOWN

T — THERMOSTAT

5 — NOTE DESIGNATION

DESIGNATES EQUIPMENT OR DEVICE LOCATED AT LOAD IN THE FIELD

SPACE HEATER

DESIGNATES EQUIPMENT OR DEVICES LOCATED IN MCC

RTU I/O TERMINATION IN CONTROL PANEL

IONIZATION SMOKE DETECTOR

DESIGNATES EQUIPMENT OR DEVICES LOCATED IN CONTROL PANEL

E — END–OF–LINE DEVICE

F — FIRE ALARM PULL STATION

F — COMBINATION STROBE LIGHT/HORN

FIREALARM CONTROL PANEL

NEMA 4X — CORROSIVE AREA

NEMA 12 — GENERAL PURPOSE AREA

NEMA 7 — CLASSIFIED HAZARDOUS AREA

ONE-LINE DIAGRAM SYMBOLS

2 — SIZE 2 COMBINATION FULL VOLTAGE NON–REVERSING MAGNETIC STARTER MCP SIZED BY MANUFACTURER (OVERLOAD RELAY NOT SHOWN).
RV = REDUCED VOLTAGE
2S2W = TWO–SPEED TWO–WINDING
2 = SIZE 2

3, 400/3 — CURRENT TRANSFORMER WITH RATIO AND NUMBER OF UNITS

MAIN SERVICE METER (BY UTILITY COMPANY)

MF — MULTI–FUNCTION ELECTRONIC METER

K — KIRK–KEY INTERLOCK

DESIGNATES DEMOLITION WORK U.O.N

5.75% Z 480/277V — POWER TRANSFORMER. IMPEDANCE SHOWN

480V 3Ø, 4W, 600KW 60HZ — GENERATOR. POWER RATING, FREQUENCY, VOLTAGE.

200A — 200 AMP SHOWN

FU — FUSE WITH BLOWN INDICATOR

G OR ~ — STANDBY GENERATOR

GENERAL NOTES

1. THIS DRAWING IS GENERAL IN NATURE. SOME SYMBOLS SHOWN HEREON MAY NOT BE USED ON THE CONTRACT DRAWINGS.
2. IDENTIFICATIONS (ID), SIZES, RATINGS, LOCATIONS AND SIMILAR INFORMATION SHOWN ASSOCIATED WITH SYMBOLS ARE OPTIONAL; EXAMPLES OF SUCH INFORMATION ARE SHOWN WITH SOME SYMBOLS FOR CLARITY.
3. THE ELECTRICAL DRAWINGS USE THE ONE–LINE DIAGRAMS AND PANEL SCHEDULES IN CONJUNCTION WITH SHOWING THE LOCATION OF THE ELECTRICAL/INSTRUMENTATION SOURCES AND LOADS/DEVICES SHOWN ON THE PLAN DRAWINGS TO DEPICT THE WORK. THE CONTRACTOR SHALL USE THESE DOCUMENTS TO DETERMINE AND PROVIDE THE NECESSARY RACEWAY AND WIRING SYSTEM FOR EACH CIRCUIT. ALL INDOOR RACEWAY SHALL BE RUN EXPOSED, AND ROUTED BY THE CONTRACTOR, UNLESS OTHERWISE NOTED.
4. THE LOCATION OF THE CONTROL STATIONS SHOWN ON THE PLAN DRAWINGS ARE DIAGRAMMATIC AND THE ACTUAL LOCATION SHALL BE COORDINATED IN THE FIELD WITH THE CONSTRUCTION MANAGER.
5. THE EXACT LOCATION OF THE MOTORS, VALVES, AND ACCESSORIES ARE NOT SHOWN. THE CONTRACTOR SHALL COORDINATE WITH THE STRUCTURAL AND MECHANICAL DRAWINGS FOR EXACT CONDUIT STUB OUT AND TERMINATION LOCATIONS.
6. ALL EQUIPMENT SHALL BE LABELED WITH NAMEPLATES. DESCRIPTION OF EQUIPMENT SHALL BE IN ACCORDANCE WITH THE ONE–LINE DIAGRAM DESCRIPTION. A LIST OF THE NAMEPLATES SHALL BE SUBMITTED TO THE CONSTRUCTION MANAGER PRIOR TO ENGRAVING.
7. UNLESS OTHERWISE NOTED, ALL CONVENIENCE OUTLETS SHALL BE MOUNTED AT 48–INCHES ABOVE FINISHED FLOOR. ALL LIGHT SWITCHES SHALL BE MOUNTED AT 54–INCHES ABOVE FINISHED FLOOR.
8. EACH CONVENIENCE OUTLET AND LIGHTING CIRCUIT SHALL BE PROVIDED WITH A #12AWG GREEN GROUNDING CONDUCTOR.
9. FOR SPARE CONDUCTORS, AT EACH END, TAPE & COIL UP AND PROVIDE ENGRAVED TAG IDENTIFYING "FROM AND TO" DESTINATION.
10. ALL EXTERIOR CONDUITS SHALL BE PVC COATED RIGID GALVANIZED STEEL. ALL OUTDOOR ENCLOSURES SHALL BE NEMA 4X.
11. CONDUIT ENTERING OR LEAVING CLASSIFIED HAZARDOUS LOCATION SHALL BE PROVIDED WITH "EYS" SEALS PER NEC.
12. ELECTRICAL DRAWINGS DO NOT SHOW ALL REQUIRED DEMOLITION. SEE MECHANICAL DRAWINGS FOR ADDITIONAL DEMOLITION.
13. CONDUITS EMBEDDED IN FLOOR SLAB SHALL FOLLOW REQUIREMENTS OF THE AMERICAN CONCRETE INSTITUTE ACI 318 SECTION 6.3.
14. FOR EACH FIELD MOUNTED DEVICE USING 120VAC, FURNISH AND INSTALL A MOTOR STARTER SWITCH STYLE NEMA 4X TOGGLE SWITCH PADLOCKABLE.
15. FOR EXISTING MOTORIZED EQUIPMENT TO BE DEMOLISHED AS SHOWN ON DEMOLITION DRAWINGS, THE POWER SOURCES SUCH AS EXISTING MOTOR CONTROL CENTERS AND POWER PANELS SHALL BE MARKED AS SPARES ON BREAKERS FEEDING THESE DEMOLISHED LOADS (NOT REUSED OR RELOCATED).

REGISTERED PROFESSIONAL ENGINEER DIEP TAN NGUYEN No. E-10687 Exp. 6/30/17 ELECTRICAL STATE OF CALIFORNIA 11/18/16

0" 1" — VERIFY SCALES — BAR IS ONE INCH LONG ON FULL SIZE DRAWING. IF NOT ONE INCH LONG ON THIS DRAWING, ADJUST SCALES ACCORDINGLY

DTN ENGINEERS, INC. Oakland, San Francisco, Orange County, CA

RMC water and environment

REV	DATE	BY	APVD	DESCRIPTION

DESIGNED TP
DRAWN LD
CHECKED DN

SUBMITTED: MARK TAKEMOTO, RMC PROJECT ENGINEER CE-64369
APPROVED: STEVE CLARY, RMC ENGINEER CE-30318

SAUSALITO • MARIN CITY SANITARY DISTRICT

TREATMENT AND WET WEATHER FLOW UPGRADE

LEGEND AND GENERAL NOTES

DWG NO E-1
SHEET NO 165 OF 226
PROJ NO 055-006
DATE NOVEMBER 2016

FILENAME: 286F_E01 11–18–16 08:33am LocDo || XREFS: | X–SMCSD–TBLK | MTakemoto–PE–stamp |<<––

Last Saved By: Admin 11–14–16 11:35am

REFER TO DRAWING E–26 FOR GENERAL ELECTRICAL SEQUENCE OF WORK

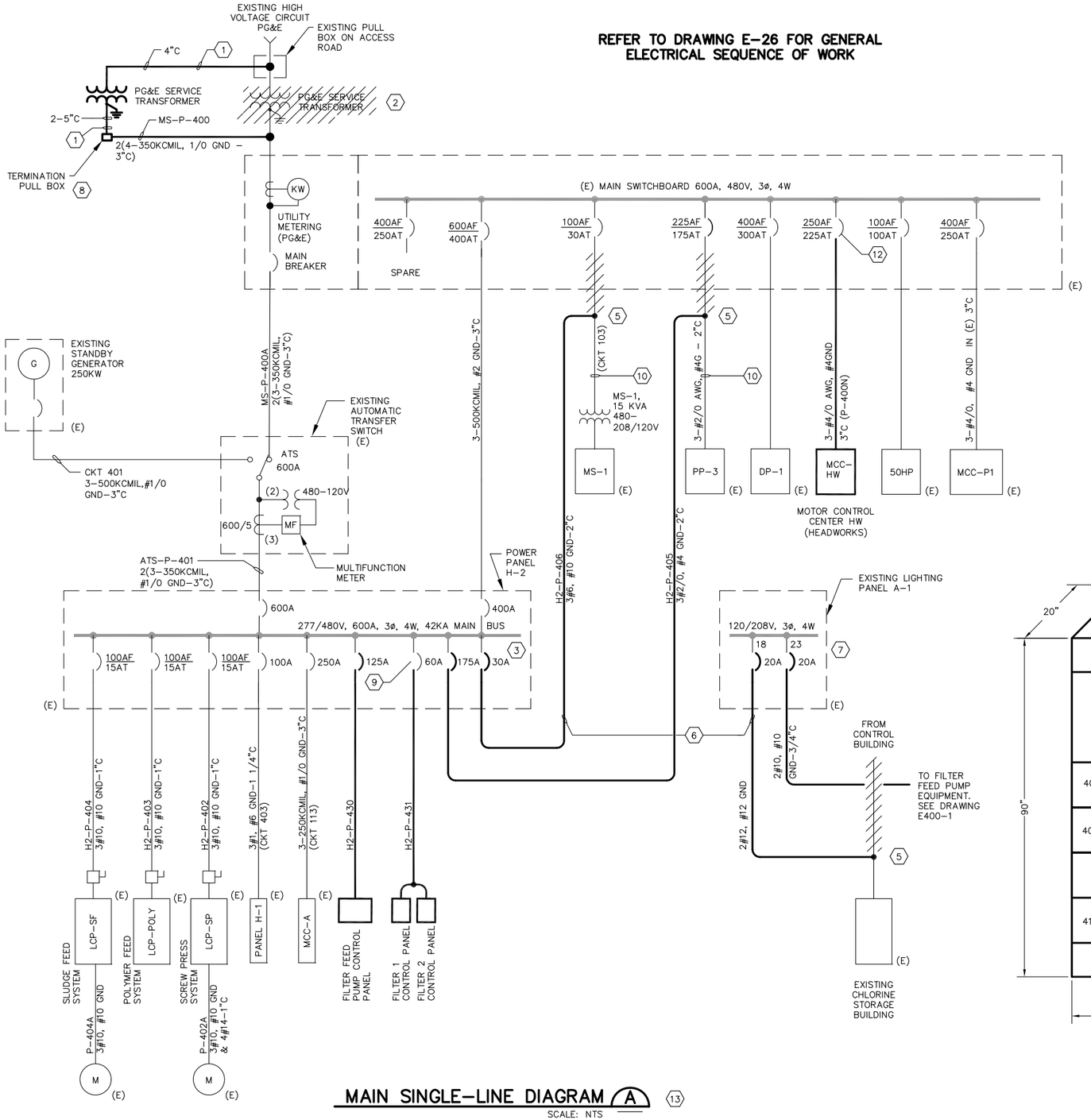

MAIN SINGLE–LINE DIAGRAM (A) (13)

SCALE: NTS

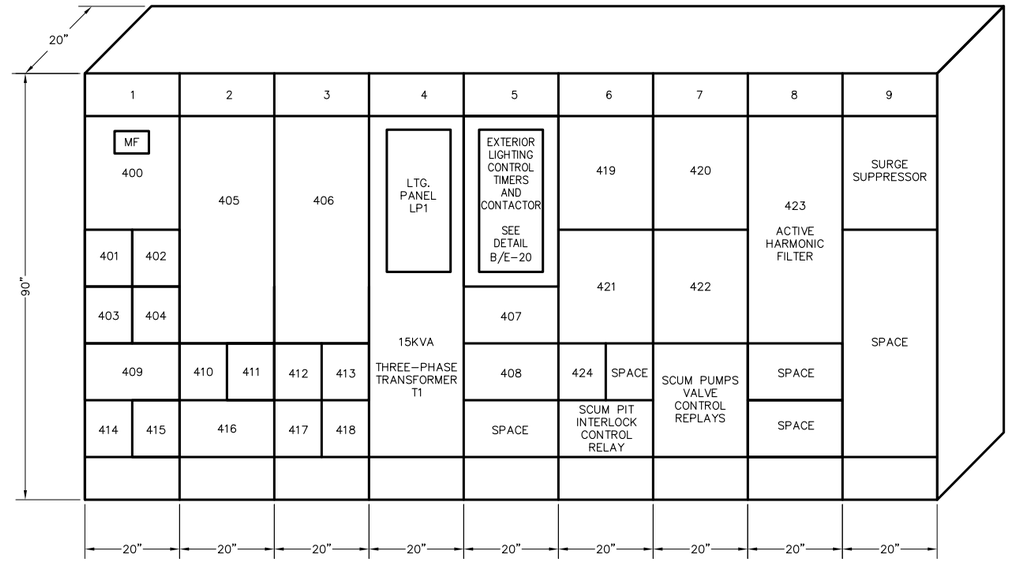

MCC–HW ELEVATION (B) (11)

SCALE: NTS

SHEET NOTES:

1. CONTRACTOR SHALL FURNISH AND INSTALL EMPTY CONDUIT WITH PULL WIRES. PG&E WILL FURNISH AND INSTALL SERVICE CABLES.
2. EXISTING TRANSFORMER SHALL BE REMOVED AND RELOCATED BY PG&E.
3. REMOVE EXISTING 250A AND 60A BREAKERS AND RETURN THEM TO THE DISTRICT. FURNISH AND INSTALL THREE NEW BREAKERS (175A, 125A, AND 30A) IN THIS PANEL TO FEED LOADS AS SHOWN. NEW BREAKERS SHALL BE EATON HFD SERIES TO MATCH EXISTING. UPDATE NAMEPLATES FOR NEW LOADS.
4. SEE DRAWING E–26 FOR REQUIRED RENTAL GENERATOR DURING SERVICE TRANSFORMER RELOCATION AND DIESEL TANK REPLACEMENT WORK.
5. THIS CONNECTION SHALL BE MADE IN NEW PULL BOX LOCATED ON ACCESS ROAD. SEE DRAWING E–22.
6. THESE TWO CIRCUITS SHALL BE IN SAME CONDUIT (2") ORIGINATED FROM EXISTING GENERATOR BUILDING WHERE EXISTING LIGHTING PANEL A–1 AND PANEL H–2 ARE LOCATED. SEE DRAWING E–25 FOR LOCATIONS OF PANELS H–2 AND A–1.
7. FURNISH AND INSTALL TWO NEW 20A 1P BREAKERS IN EXISTING LIGHTING PANEL A–1 AS SHOWN. (CIRCUIT No. 18 & 23). NEW BREAKERS SHALL MATCH EXISTING INSTALLATION.
8. TERMINATION PULL BOX SHALL FULLY CONFORM TO PG&E SERVICE REQUIREMENTS SPECIFIED IN PG&E GREEN BOOK. THIS PULL BOX SHALL CONTAIN TIN–PLATED COPPER BUSING SUITABLE FOR 600A 480V THREE–PHASE, 4–WIRE SERVICE WITH MINIMUM SHORT CIRCUIT BRACING AT 65KA 480V SYMMETRICAL FAULT.
9. USE THIS EXISTING BREAKERS.
10. MEGGER & TEST EXISTING CABLES PRIOR TO CONNECTIONS TO NEW CIRCUITS.
11. SEE CONTROL DIAGRAMS ON E–6, E–7, E–8, & E–9 FOR PILOT DEVICES MOUNTED ON EACH SECTION OF THE MCC. SEE SPECS FOR DETAILED REQUIREMENTS FOR THE MCC.
12. THIS EXISTING BREAKER IS A SPARE TO BE USED AS SHOWN. UPDATE NAMEPLATE FOR NEW LOAD.
13. A PLANT WIDE ARC FLASH STUDY IS REQUIRED REFER TO SPECS SECTION 16938 FOR DETAILED REQUIREMENTS.

REGISTERED PROFESSIONAL ENGINEER — DEEP TAN NGUYEN — No. E18004 — 10/2017 — ELECTRICAL — STATE OF CALIFORNIA

11/18/16

0" 1" — VERIFY SCALES — BAR IS ONE INCH LONG ON FULL SIZE DRAWING. IF NOT ONE INCH LONG ON THIS DRAWING, ADJUST SCALES ACCORDINGLY

ENGINEERS, INC. Oakland, San Francisco, Orange County, Ca.

RMC water and environment

REV	DATE	BY	APVD	DESCRIPTION

DESIGNED	TP
DRAWN	LD
CHECKED	DN

SUBMITTED: MARK TAKEMOTO, RMC PROJECT ENGINEER CE-64369

APPROVED: STEVE CLARY, RMC ENGINEER CE-30318

SAUSALITO • MARIN CITY SANITARY DISTRICT

TREATMENT AND WET WEATHER FLOW UPGRADE

MAIN SINGLE - LINE DIAGRAM AND MCC HW ELEVATION

DWG NO	E-2
SHEET NO	166 OF 226
PROJ NO	055-006
DATE	NOVEMBER 2016

FILENAME: 286F_E02 11-18-16 08:33am LocDo ‖ XREFS:‖ X-SMCSD-TBLK ‖ MTakemoto-PE-stamp |<<--

Last Saved By: LocDo 11-11-16 10:02am

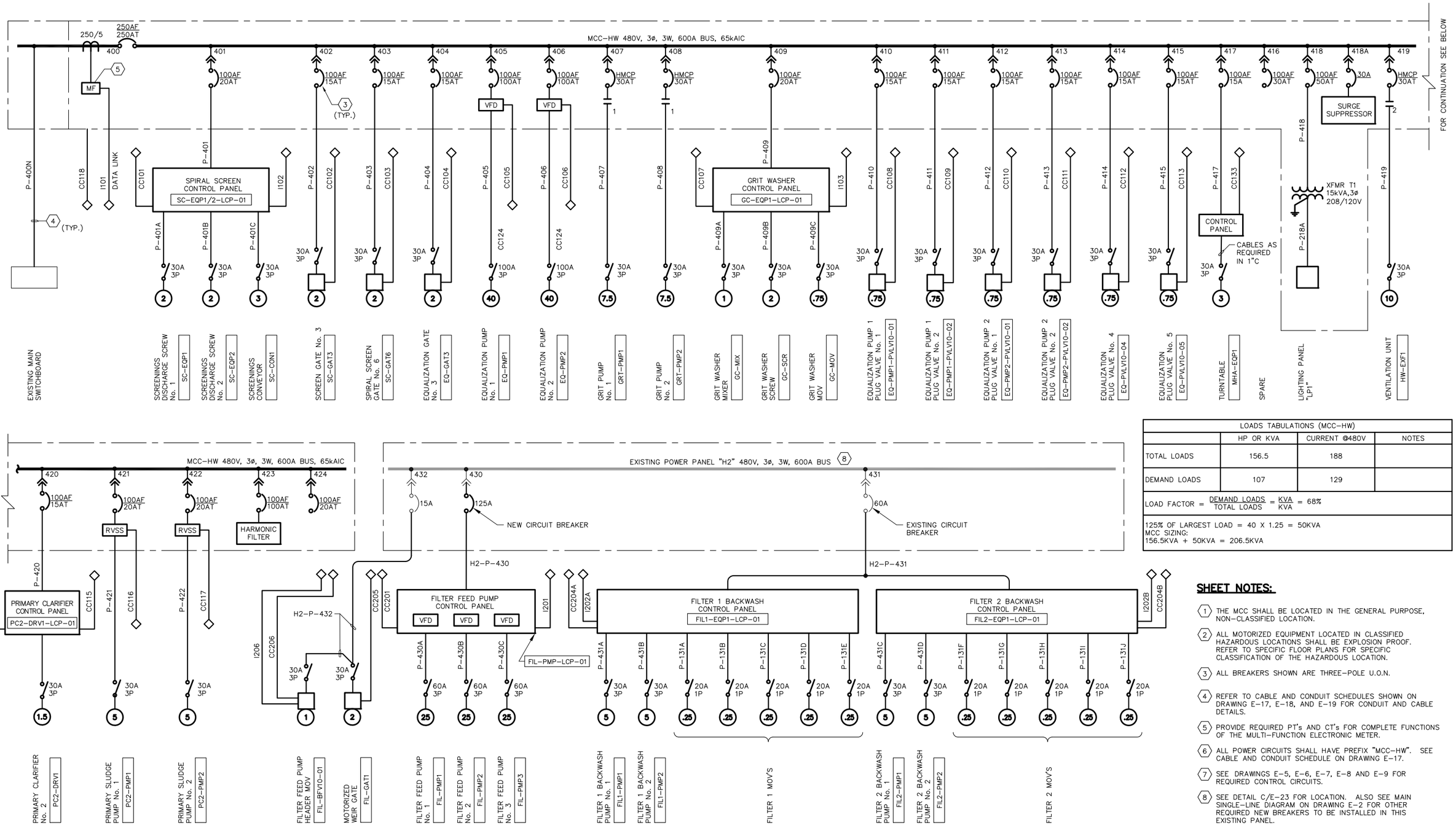

LOADS TABULATIONS (MCC-HW)			
	HP OR KVA	CURRENT @480V	NOTES
TOTAL LOADS	156.5	188	
DEMAND LOADS	107	129	

LOAD FACTOR = $\frac{\text{DEMAND LOADS}}{\text{TOTAL LOADS}} = \frac{\text{KVA}}{\text{KVA}} = 68\%$

125% OF LARGEST LOAD = 40 X 1.25 = 50KVA
MCC SIZING:
156.5KVA + 50KVA = 206.5KVA

SHEET NOTES:

1. THE MCC SHALL BE LOCATED IN THE GENERAL PURPOSE, NON-CLASSIFIED LOCATION.
2. ALL MOTORIZED EQUIPMENT LOCATED IN CLASSIFIED HAZARDOUS LOCATIONS SHALL BE EXPLOSION PROOF. REFER TO SPECIFIC FLOOR PLANS FOR SPECIFIC CLASSIFICATION OF THE HAZARDOUS LOCATION.
3. ALL BREAKERS SHOWN ARE THREE-POLE U.O.N.
4. REFER TO CABLE AND CONDUIT SCHEDULES SHOWN ON DRAWING E-17, E-18, AND E-19 FOR CONDUIT AND CABLE DETAILS.
5. PROVIDE REQUIRED PT's AND CT's FOR COMPLETE FUNCTIONS OF THE MULTI-FUNCTION ELECTRONIC METER.
6. ALL POWER CIRCUITS SHALL HAVE PREFIX "MCC-HW". SEE CABLE AND CONDUIT SCHEDULE ON DRAWING E-17.
7. SEE DRAWINGS E-5, E-6, E-7, E-8 AND E-9 FOR REQUIRED CONTROL CIRCUITS.
8. SEE DETAIL C/E-23 FOR LOCATION. ALSO SEE MAIN SINGLE-LINE DIAGRAM ON DRAWING E-2 FOR OTHER REQUIRED NEW BREAKERS TO BE INSTALLED IN THIS EXISTING PANEL.

SINGLE-LINE DIAGRAMS-MOTOR CONTROL CENTER MCC-HW AND POWER PANEL H-2 (A) (1)(5)(7)

SCALE: NTS

REGISTERED PROFESSIONAL ENGINEER DIEP TAN NGUYEN 6/30/17 ELECTRICAL STATE OF CALIFORNIA
11/18/16

0" 1" VERIFY SCALES BAR IS ONE INCH LONG ON FULL SIZE DRAWING. IF NOT ONE INCH LONG ON THIS DRAWING, ADJUST SCALES ACCORDINGLY

ENGINEERS, INC. Oakland, San Francisco, Orange County, Ca.

RMC water and environment

REV	DATE	BY	APVD	DESCRIPTION

DESIGNED	TP
DRAWN	LD
CHECKED	DN

SUBMITTED: MARK TAKEMOTO, RMC PROJECT ENGINEER CE-64369

APPROVED: STEVE CLARY, RMC ENGINEER CE-30318

SAUSALITO · MARIN CITY SANITARY DISTRICT

TREATMENT AND WET WEATHER FLOW UPGRADE

MCC-HW SINGLE - LINE DIAGRAM

DWG NO E-3
SHEET NO 167 OF 226
PROJ NO 055-006
DATE NOVEMBER 2016

FILENAME: 286F_E03 11-18-16 08:33am LocDo || XREFS: | X-SMCSD-TBLK | MTakemoto-PE-stamp |<<--

Last Saved By: LocDo 11-11-16 09:21am

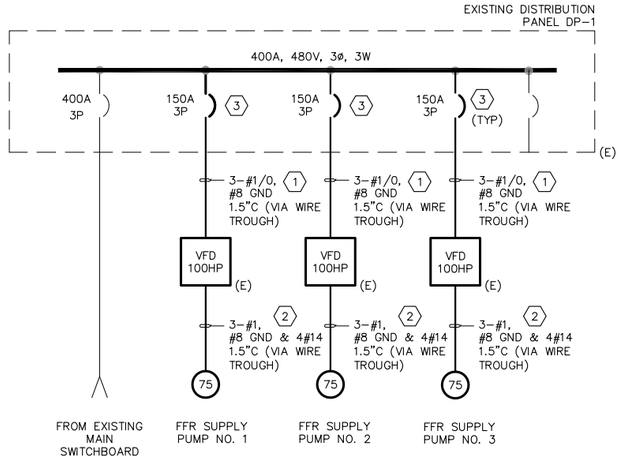

NOTE:

1. SEE DRAWING E300-1 FOR ADDITIONAL INSTALLATION REQUIREMENTS.

EXISTING DISTRIBUTION PANEL DP-1 MODIFICATIONS (A)

SCALE: NTS

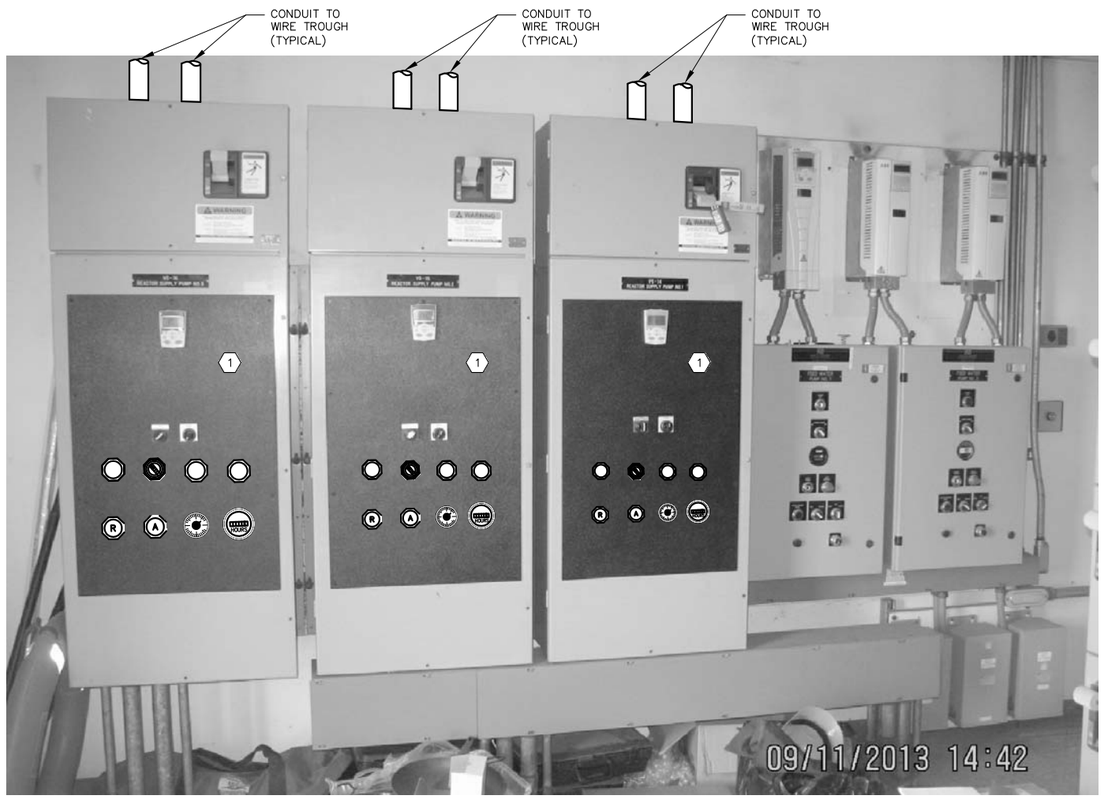

FFR VFD MODIFICATIONS (B)

SCALE: NTS

SHEET NOTES:

1. THIS EXISTING VFD SHALL BE REWIRED TO ACCOMMODATE NEW DEVICES AS SHOWN. EXISTING HOA SWITCH, SPEED POD AND KEYPAD SHALL BE REUSED. ADD NEW CONTACT BLOCKS AS REQUIRED.
2. REMOVE EXISTING FEEDER CONDUCTORS PRIOR TO REPLACEMENT THEM WITH NEW CONDUCTORS IN NEW CONDUIT. SEE DRAWING E300-1 FOR ADDITIONAL DETAILS.
3. REMOVE EXISTING 90A 3P BREAKER PRIOR TO INSTALLING NEW BREAKER AS SHOWN. PROVIDE NECESSARY AUXILIARY MATERIALS, HARDWARE FOR COMPLETE INSTALLATION.
4. USE EXISTING PLC PUMP RUN COMMAND SIGNAL.

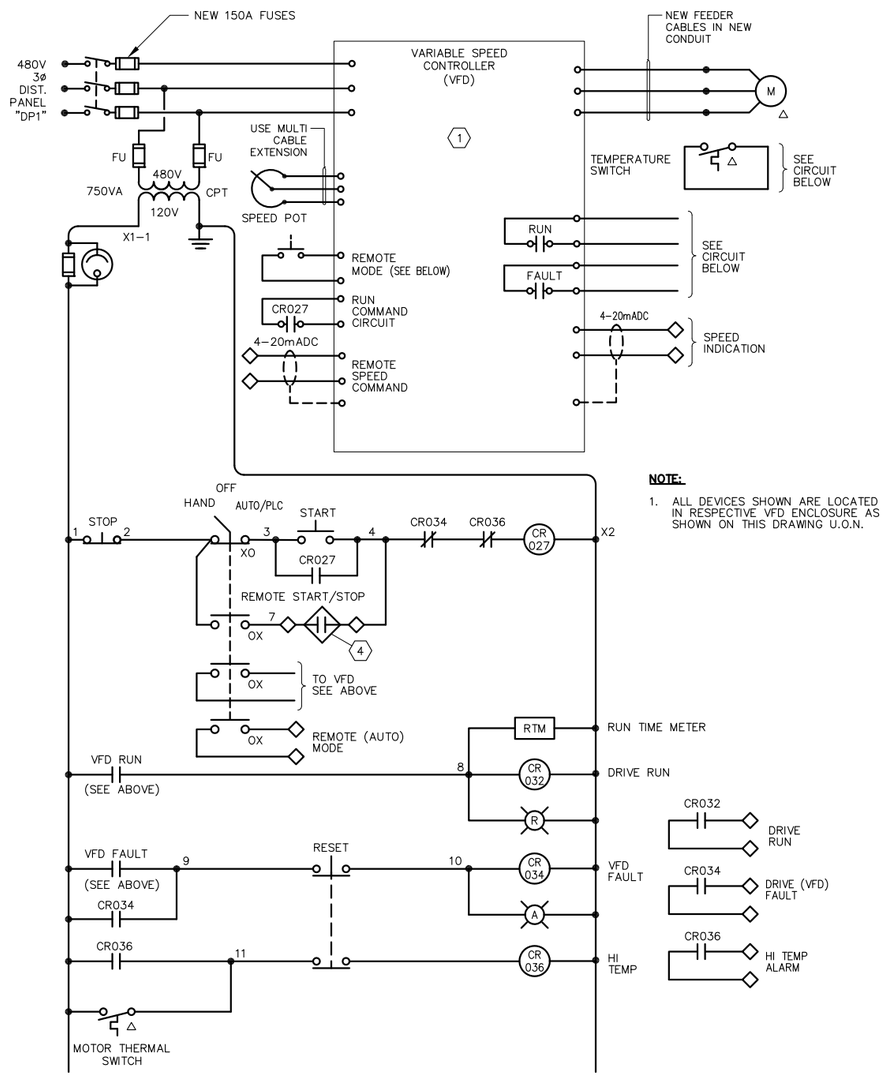

NOTE:

1. ALL DEVICES SHOWN ARE LOCATED IN RESPECTIVE VFD ENCLOSURE AS SHOWN ON THIS DRAWING U.O.N.

CONTROLS-FFR SUPPLY PUMPS TYPICAL FOR 3 PUMPS (C)

SCALE: NTS

REGISTERED PROFESSIONAL ENGINEER DIEP TAN NGUYEN No. E17008 ELECTRICAL STATE OF CALIFORNIA 11/18/16

REV	DATE	BY	APVD	DESCRIPTION		

0" — 1" VERIFY SCALES BAR IS ONE INCH LONG ON FULL SIZE DRAWING. IF NOT ONE INCH LONG ON THIS DRAWING, ADJUST SCALES ACCORDINGLY

ENGINEERS, INC. Oakland, San Francisco, Orange County, Ca

RMC water and environment

DESIGNED	TP
DRAWN	LD
CHECKED	DN

SUBMITTED: MARK TAKEMOTO, RMC PROJECT ENGINEER CE-64369

APPROVED: STEVE CLARY, RMC ENGINEER CE-30318

SAUSALITO · MARIN CITY SANITARY DISTRICT

TREATMENT AND WET WEATHER FLOW UPGRADE

FFR SUPPLY PUMPS MODIFICATIONS

DWG NO	E-4
SHEET NO	168 OF 226
PROJ NO	055-006
DATE	NOVEMBER 2016

FILENAME: 286F_E04 11-18-16 08:34am LocDo || XREFS:| X-SMCSD-TBLK | MTakemoto-PE-stamp |<<--

Last Saved By: LocDo 11-11-16 09:21am

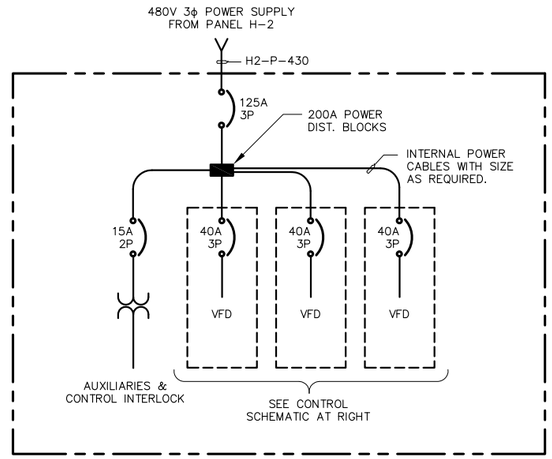

FILTER FEED PUMP POWER DISTRIBUTION (A)

SCALE: NTS

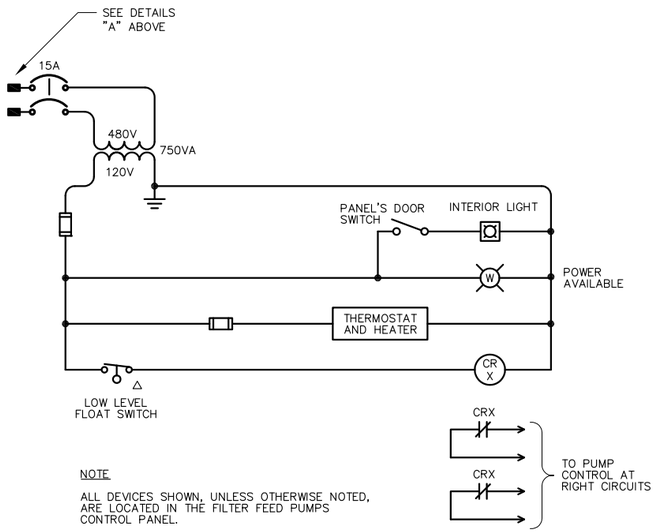

NOTE

ALL DEVICES SHOWN, UNLESS OTHERWISE NOTED, ARE LOCATED IN THE FILTER FEED PUMPS CONTROL PANEL.

FILTER FEED PUMPS CONTROL INTERLOCK (B)

SCALE: NTS

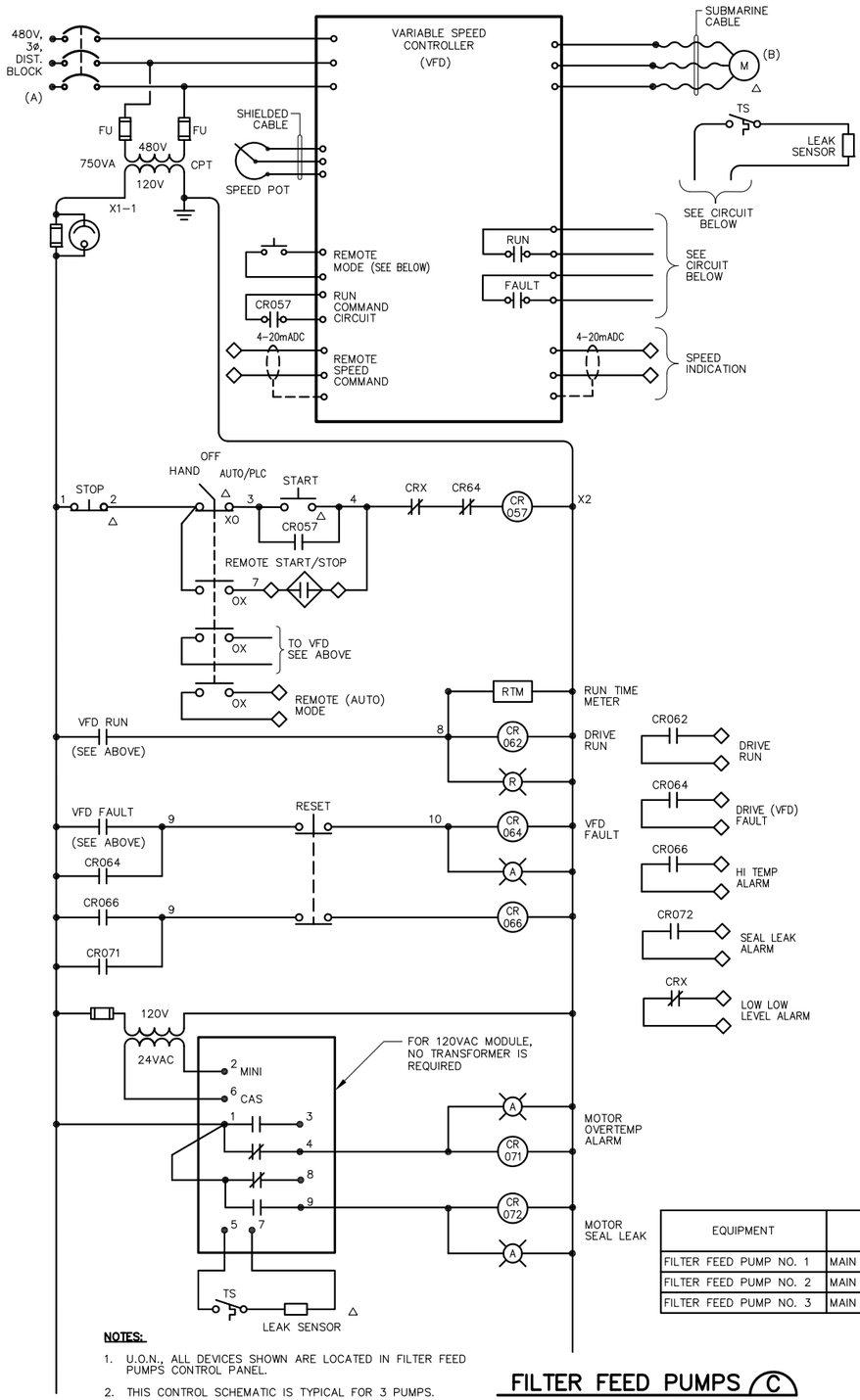

NOTES:

1. U.O.N., ALL DEVICES SHOWN ARE LOCATED IN FILTER FEED PUMPS CONTROL PANEL.
2. THIS CONTROL SCHEMATIC IS TYPICAL FOR 3 PUMPS.

FILTER FEED PUMPS (C)

SCALE: NTS

SHEET NOTES:

(1) THIS PANEL SHALL BE NEMA 3RX (STAINLESS STEEL) WITH ALL DEVICES MOUNTED ON THE PANELS'S DOOR SUITABLE FOR CORROSIVE ENVIRONMENT. SEE DIV 16 SPECS FOR DETAILED REQUIREMENTS.

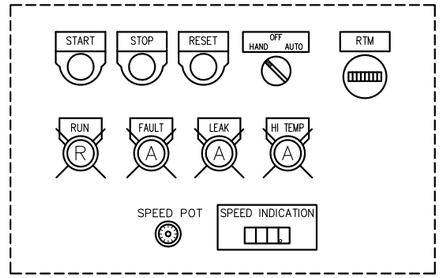

TYPICAL CONTROL DEVICES (E)

TYPICAL FOR THREE PUMPS SCALE: NTS

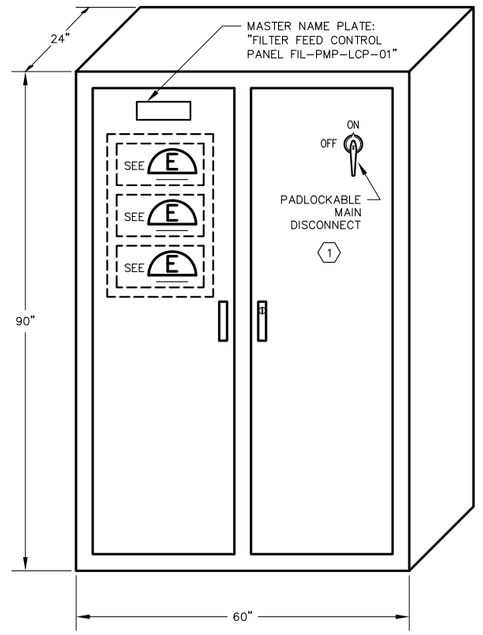

FILTER FEED PUMPS CONTROL PANEL (D)

SCALE: NTS

EQUIPMENT	(A)	(B)	NOTES
FILTER FEED PUMP NO. 1	MAIN DIST. POWER BLOCK	SUBMERSIBLE MOTOR	
FILTER FEED PUMP NO. 2	MAIN DIST. POWER BLOCK	SUBMERSIBLE MOTOR	
FILTER FEED PUMP NO. 3	MAIN DIST. POWER BLOCK	SUBMERSIBLE MOTOR	

REGISTERED PROFESSIONAL ENGINEER — DIEP TAN NGUYEN — No. E13061 — 9/30/17 — ELECTRICAL — STATE OF CALIFORNIA

11/18/16

0" 1" — VERIFY SCALES — BAR IS ONE INCH LONG ON FULL SIZE DRAWING. IF NOT ONE INCH LONG ON THIS DRAWING, ADJUST SCALES ACCORDINGLY

ENGINEERS, INC. Oakland, San Francisco, Orange County, Ca.

RMC water and environment

REV	DATE	BY	APVD	DESCRIPTION
1				
2				
3				
4				
5				

DESIGNED TP
DRAWN LD
CHECKED DN

SUBMITTED: MARK TAKEMOTO, RMC PROJECT ENGINEER CE-64369
APPROVED: STEVE CLARY, RMC ENGINEER CE-30318

SAUSALITO · MARIN CITY SANITARY DISTRICT

TREATMENT AND WET WEATHER FLOW UPGRADE

FILTER FEED PUMPS
CONTROL SCHEMATIC & PANEL

DWG NO E-5
SHEET NO 169 OF 226
PROJ NO 055-006
DATE NOVEMBER 2016

FILENAME: 286F_E05 11-18-16 08:34am LocDo | XREFs: | X-SMCSD-TBLK | MTakemoto-PE-stamp |<<--

Last Saved By: tp 11-10-16 10:21am

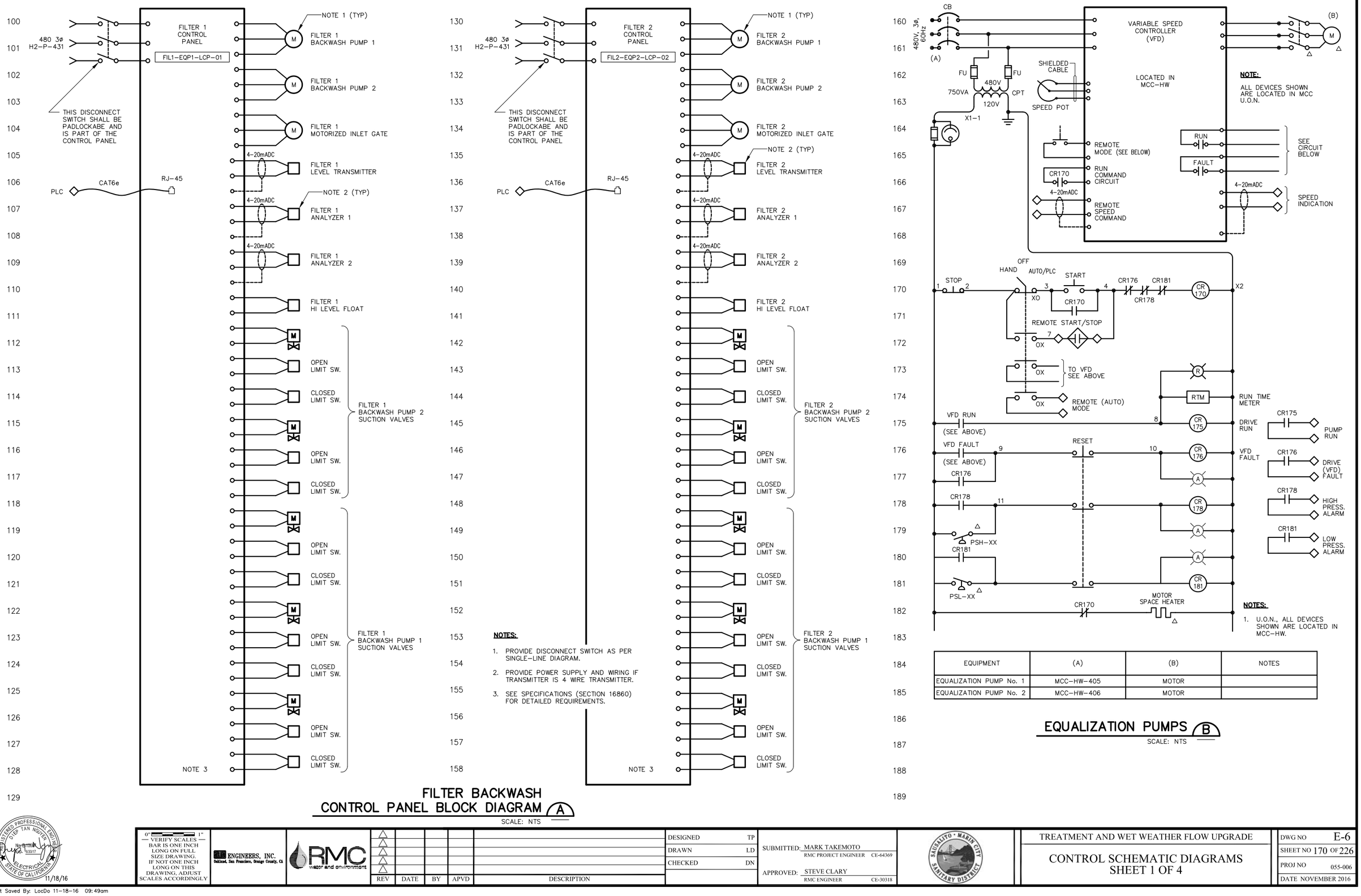

EQUIPMENT	(A)	(B)	NOTES
EQUALIZATION PUMP No. 1	MCC-HW-405	MOTOR	
EQUALIZATION PUMP No. 2	MCC-HW-406	MOTOR	

FILTER BACKWASH CONTROL PANEL BLOCK DIAGRAM (A)

SCALE: NTS

EQUALIZATION PUMPS (B)

SCALE: NTS

TILENAME: 286F_E06 11-18-16 09:49am LocDo || XREFS: | X-SMCSD-TBLK | MTakemoto-PE-stamp |<<--

Last Saved By: LocDo 11-18-16 09:49am

REGISTERED PROFESSIONAL ENGINEER — DIEP TAN NGUYEN — No. E17008 — 8/30/17 — ELECTRICAL — STATE OF CALIFORNIA

11/18/16

0" — 1" VERIFY SCALES — BAR IS ONE INCH LONG ON FULL SIZE DRAWING. IF NOT ONE INCH LONG ON THIS DRAWING, ADJUST SCALES ACCORDINGLY

ENGINEERS, INC. Oakland, San Francisco, Orange County, Ca

RMC water and environment

REV	DATE	BY	APVD	DESCRIPTION

DESIGNED	TP
DRAWN	LD
CHECKED	DN

SUBMITTED: MARK TAKEMOTO, RMC PROJECT ENGINEER CE-64369

APPROVED: STEVE CLARY, RMC ENGINEER CE-30318

SAUSALITO · MARIN CITY SANITARY DISTRICT

TREATMENT AND WET WEATHER FLOW UPGRADE

CONTROL SCHEMATIC DIAGRAMS
SHEET 1 OF 4

DWG NO	E-6
SHEET NO	170 OF 226
PROJ NO	055-006
DATE	NOVEMBER 2016

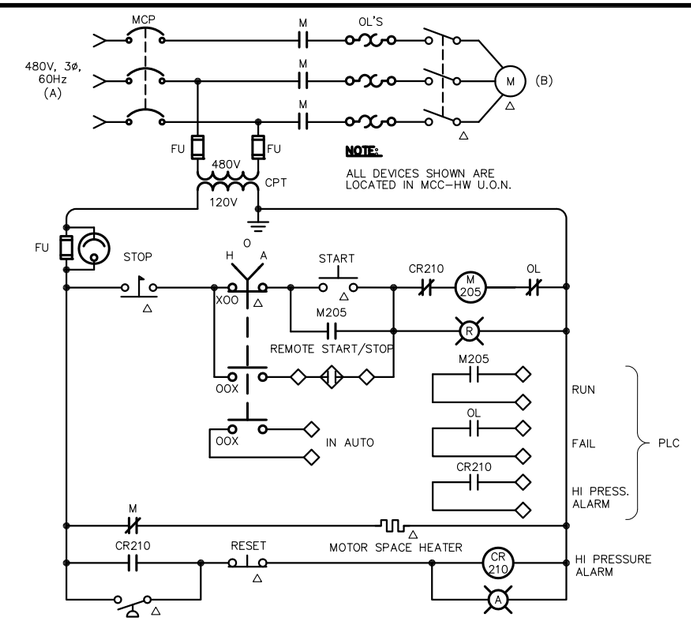

EQUIPMENT	(A)	(B)	NOTES
GRIT PUMP No. 1	MCC-HW-407	MOTOR	
GRIT PUMP No. 2	MCC-HW-408	MOTOR	

GRIT PUMPS (A)

SCALE: NTS

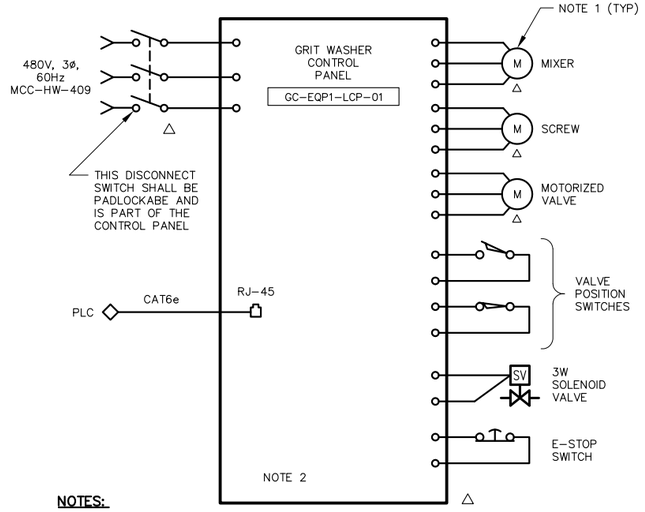

NOTES:

1. PROVIDE DISCONNECT SWITCH PER SINGLE-LINE DIAGRAM.
2. SEE SPECIFICATION (SECTION 16860) FOR DETAILED REQUIREMENTS.

GRIT WASHER CONTROL PANEL BLOCK DIAGRAM (B)

SCALE: NTS

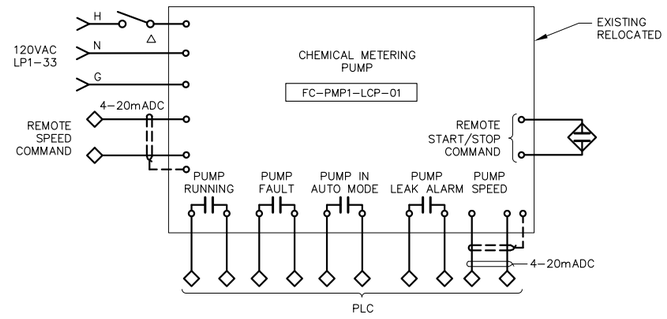

FERRIC CHLORIDE FEED PUMP (C)

SCALE: NTS

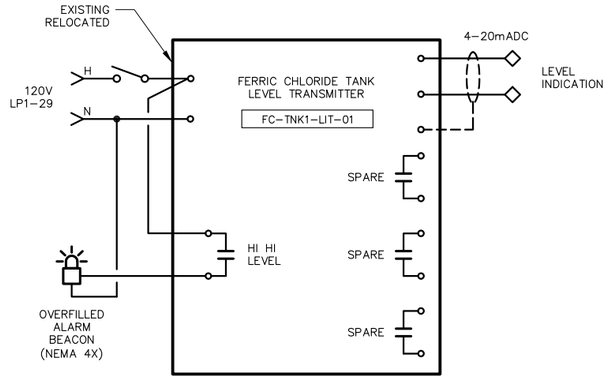

FECL3 TANK LEVEL TRANSMITTER (D)

SCALE: NTS

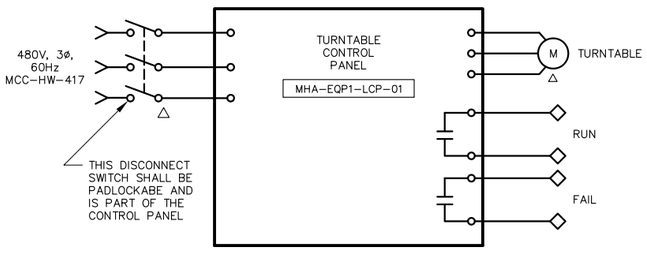

TRUCK TURNTABLE (E)

SCALE: NTS

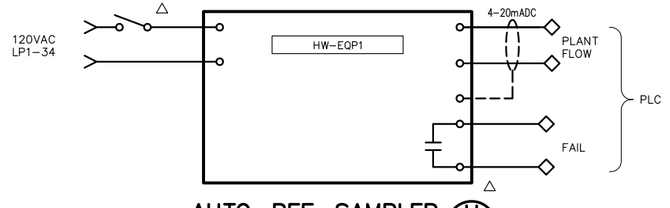

AUTO. REF. SAMPLER (H)

SCALE: NTS

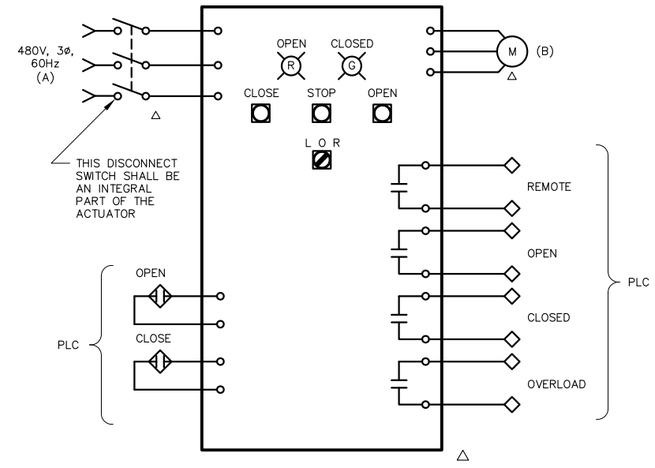

EQUIPMENT	(A)	(B)	NOTES
EQ PUMP 1 PLUG VALVE No. 1	MCC-HW-410	MOTOR ACTUATOR	
EQ PUMP 1 PLUG VALVE No. 2	MCC-HW-411	MOTOR ACTUATOR	
EQ PUMP 2 PLUG VALVE No. 1	MCC-HW-412	MOTOR ACTUATOR	
EQ PUMP 2 PLUG VALVE No. 2	MCC-HW-413	MOTOR ACTUATOR	
EQUALIZATION PLUG VALVE No. 4	MCC-HW-414	MOTOR ACTUATOR	
EQUALIZATION PLUG VALVE No. 5	MCC-HW-415	MOTOR ACTUATOR	

OPEN/CLOSE VALVES (F)

SCALE: NTS

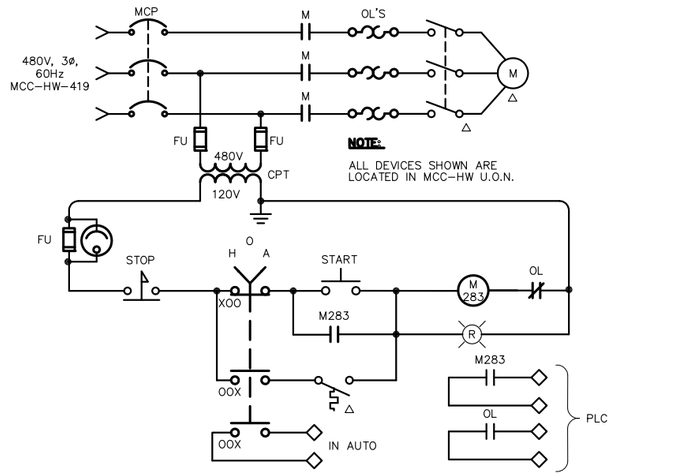

VENTILATION UNIT (G)

SCALE: NTS

FILENAME: 286F_E07 11-18-16 08:34am LocDo || XREFS: | X-SMCSD-TBLK | MTakemoto-PE-stamp |<<--
Last Saved By: LocDo 11-11-16 09:24am

REGISTERED PROFESSIONAL ENGINEER — DEEP TAN NGUYEN — No. E20017 — ELECTRICAL — STATE OF CALIFORNIA

11/18/16

0" 1" — VERIFY SCALES — BAR IS ONE INCH LONG ON FULL SIZE DRAWING. IF NOT ONE INCH LONG ON THIS DRAWING, ADJUST SCALES ACCORDINGLY

ENGINEERS, INC. Oakland, San Francisco, Orange County, CA

RMC water and environment

REV	DATE	BY	APVD	DESCRIPTION

DESIGNED	TP
DRAWN	LD
CHECKED	DN

SUBMITTED: MARK TAKEMOTO, RMC PROJECT ENGINEER CE-64369

APPROVED: STEVE CLARY, RMC ENGINEER CE-30318

SAUSALITO · MARIN CITY SANITARY DISTRICT

TREATMENT AND WET WEATHER FLOW UPGRADE

CONTROL SCHEMATIC DIAGRAMS SHEET 2 OF 4

DWG NO	E-7
SHEET NO	171 OF 226
PROJ NO	055-006
DATE	NOVEMBER 2016

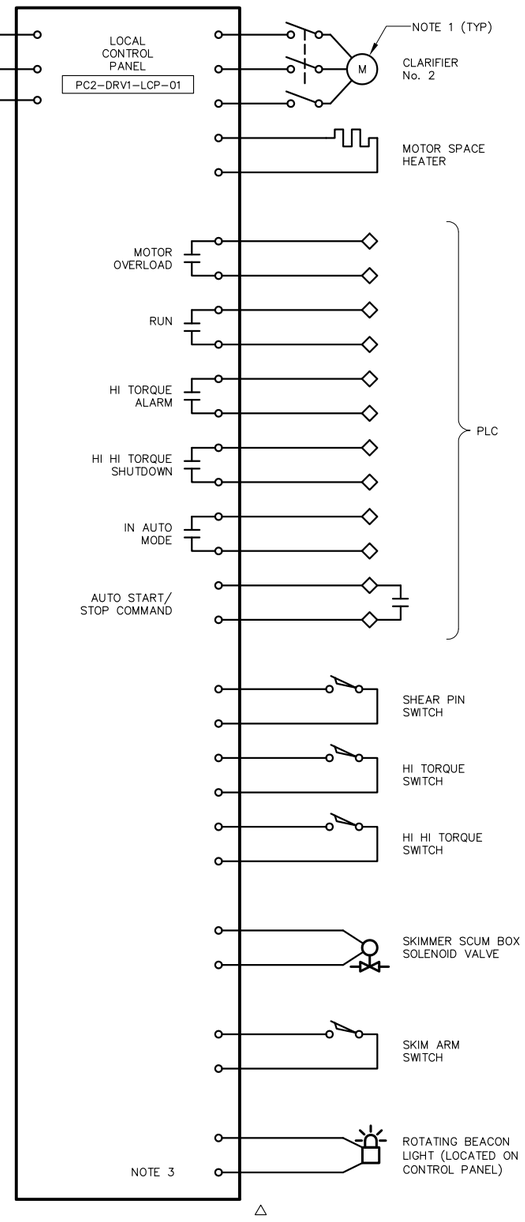

NOTES:

1. ALL DEVICES SHOWN ARE LOCATED IN THE FIELD NEAR OR AT THE CLARIFIER
2. SEE SPECIFICATIONS (SECTION 16860) FOR DETAILED REQUIREMENTS.

PRIMARY CLARIFIER No. 2 CONTROL BLOCK DIAGRAM (A)

SCALE: NTS

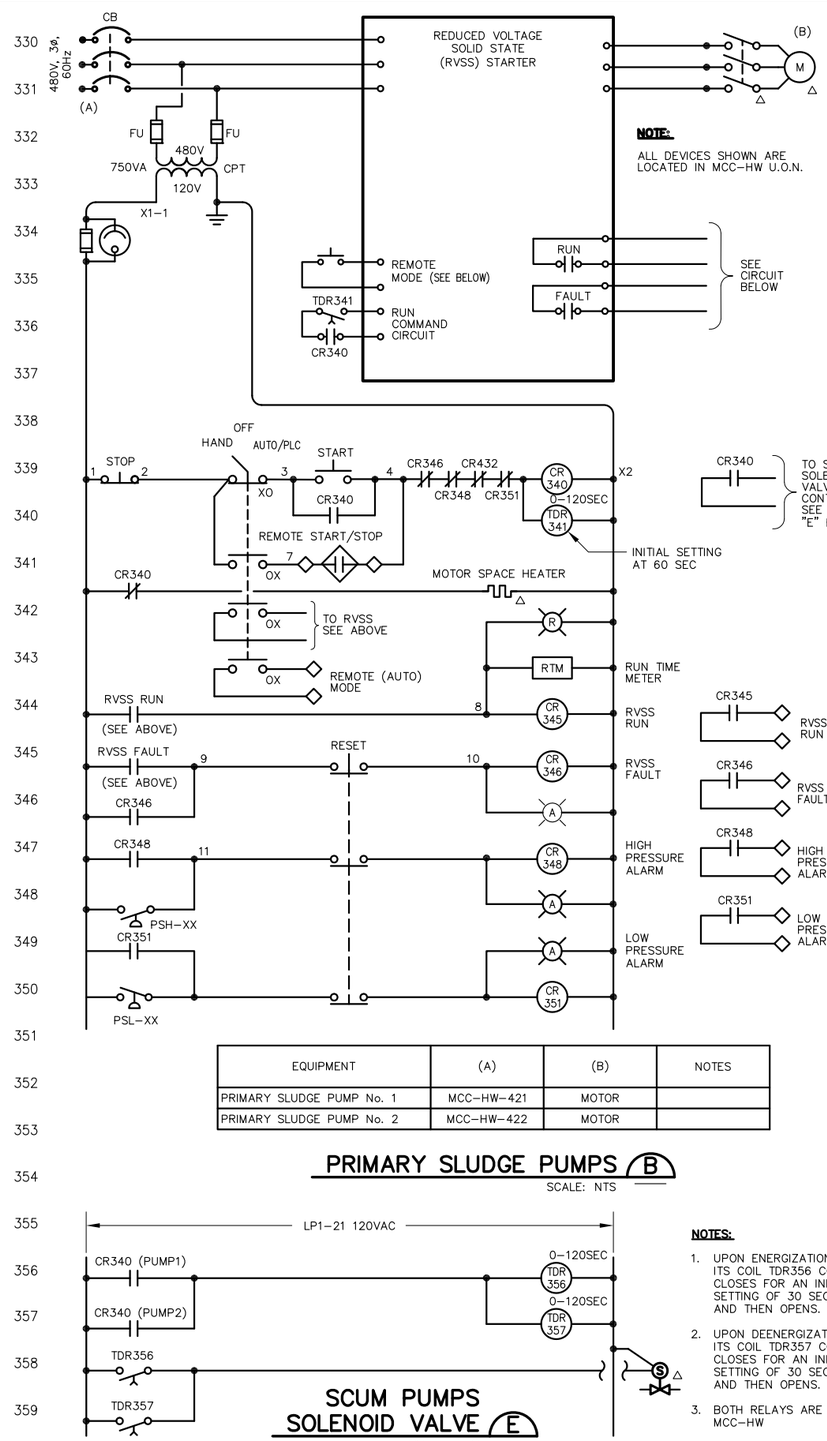

EQUIPMENT	(A)	(B)	NOTES
PRIMARY SLUDGE PUMP No. 1	MCC-HW-421	MOTOR	
PRIMARY SLUDGE PUMP No. 2	MCC-HW-422	MOTOR	

PRIMARY SLUDGE PUMPS (B)

SCALE: NTS

NOTES:

1. UPON ENERGIZATION OF ITS COIL TDR356 CONTACT CLOSES FOR AN INITIAL SETTING OF 30 SECONDS AND THEN OPENS.
2. UPON DEENERGIZATION OF ITS COIL TDR357 CONTACT CLOSES FOR AN INITIAL SETTING OF 30 SECONDS AND THEN OPENS.
3. BOTH RELAYS ARE IN MCC-HW

SCUM PUMPS SOLENOID VALVE (E)

SCALE: NTS

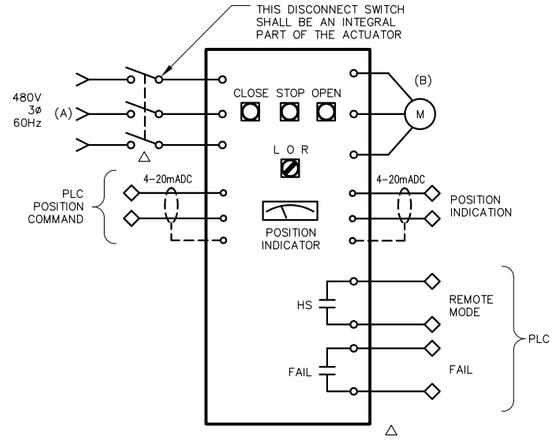

EQUIPMENT	(A)	(B)	NOTES
EQUALIZATION GATE No. 3	MCC-HW-404	MOTOR ACTUATOR	
SPIRAL SCREEN GATE No. 3	MCC-HW-402	MOTOR ACTUATOR	
FILTER INFLUENT MOTORIZED WEIR GATE	H2-P-432	MOTOR ACTUATOR	
FILTER FEED PUMP HEADER MOTORIZED VALVE	H2-P-432	MOTOR ACTUATOR	

MODULATING GATE & VALVE ACTUATORS (C)

SCALE: NTS

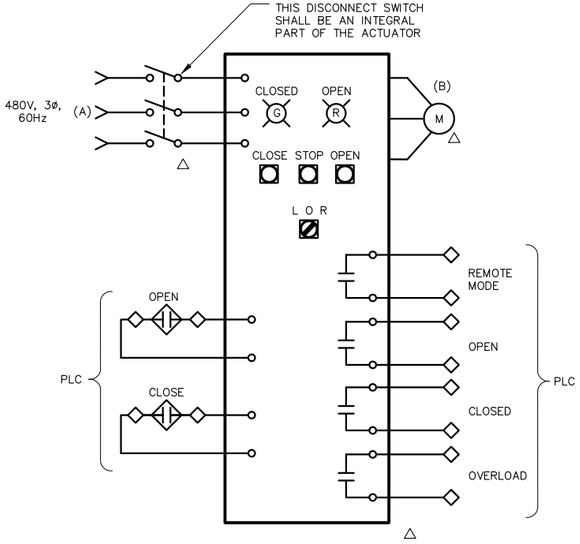

EQUIPMENT	(A)	(B)	NOTES
SPIRAL SCREEN GATE No. 6	MCC-HW-403	MOTOR ACTUATOR	FULL OPEN/ CLOSED GATE

OPEN/CLOSE GATE ACTUATORS (D)

SCALE: NTS

FILENAME: 286F_E08 11-18-16 08:34am LocDo | XREFS: X-SMCSD-TBLK | MTakemoto-PE-stamp |<<--

DIEP TAN NGUYEN — No. E-19331 — 5/31/17 — ELECTRICAL — STATE OF CALIFORNIA — REGISTERED PROFESSIONAL ENGINEER
11/18/16

0" 1" — VERIFY SCALES — BAR IS ONE INCH LONG ON FULL SIZE DRAWING. IF NOT ONE INCH LONG ON THIS DRAWING, ADJUST SCALES ACCORDINGLY

ENGINEERS, INC. Oakland, San Francisco, Orange County, CA

RMC water and environment

REV	DATE	BY	APVD	DESCRIPTION

DESIGNED	TP
DRAWN	LD
CHECKED	DN

SUBMITTED: MARK TAKEMOTO, RMC PROJECT ENGINEER CE-64369

APPROVED: STEVE CLARY, RMC ENGINEER CE-30318

SAUSALITO • MARIN CITY SANITARY DISTRICT

TREATMENT AND WET WEATHER FLOW UPGRADE

CONTROL SCHEMATIC DIAGRAMS SHEET 3 OF 4

DWG NO	E-8
SHEET NO	172 OF 226
PROJ NO	055-006
DATE	NOVEMBER 2016

Last Saved By: LocDo 11-11-16 09:25am

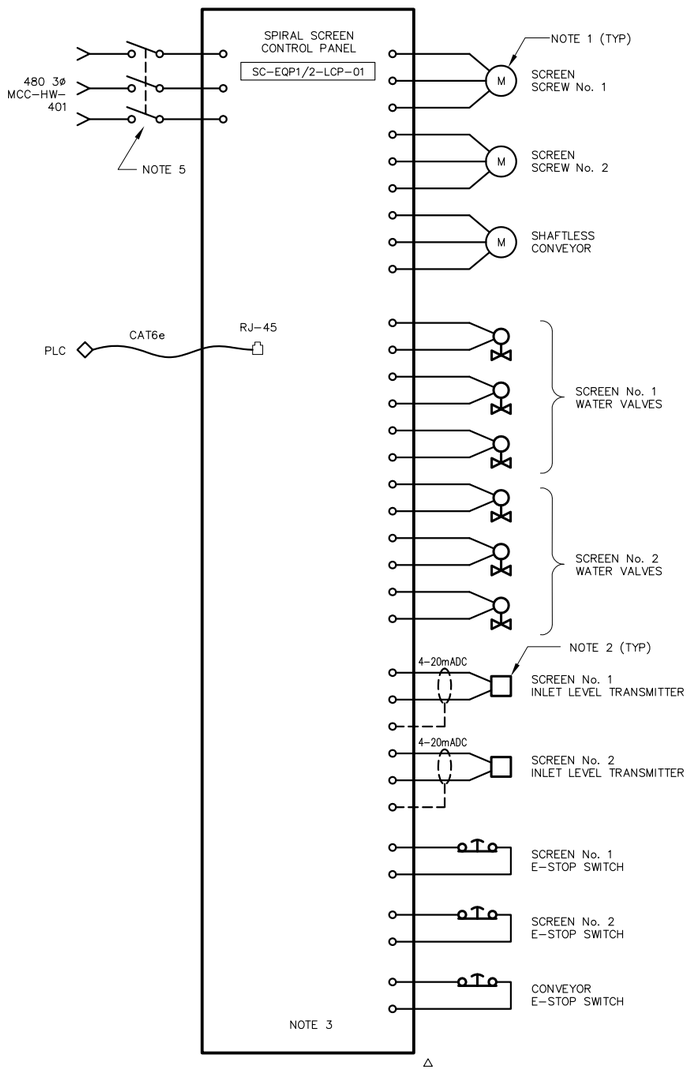

NOTES:

1. PROVIDE DISCONNECT SWITCH AS PER SINGLE-LINE DIAGRAM.
2. PROVIDE POWER SUPPLY AND WIRING IF TRANSMITTER IS 4 WIRE DEVICE.
3. SEE SPECIFICATIONS (SECTION 16860) FOR DETAILED REQUIREMENTS.
4. ALL DEVICES SHOWN ARE LOCATED IN THE FIELD.
5. THIS SWITCH SHALL BE PADLOCKABLE AND IS PART OF THE CONTROL PANEL.

SPIRAL SCREEN CONTROL PANEL BLOCK DIAGRAM (A)

SCALE: NTS

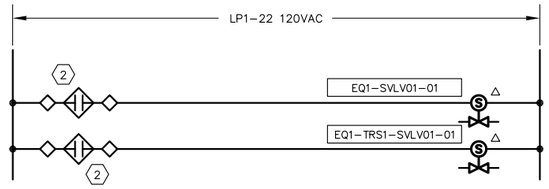

EQUALIZATION 1 SOLENOID VALVES (B)

SCALE: NTS

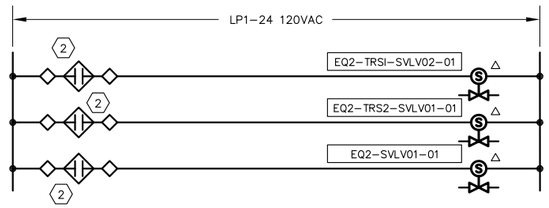

EQUALIZATION 2 SOLENOID VALVES (C)

SCALE: NTS

SHEET NOTES:

(1) IN GENERAL EACH CIRCUIT SHALL BE 2#12, #12GND-3/4"C. U.O.N.

(2) PLC OUTPUT FROM CONTROL PANEL CP-HW.

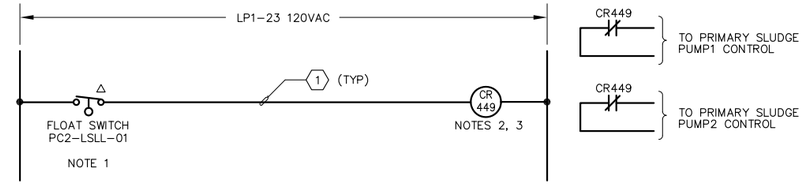

SCUM PIT LOW LEVEL INTERLOCK (E)

SCALE: NTS

NOTES:

1. FLOAT SWITCH CLOSES WITH FALLING LEVEL.
2. RELAY CR449 IS IN MCC-HW.
3. RELAY CR449 IS AN INTRINSICALLY SAFE RELAY.

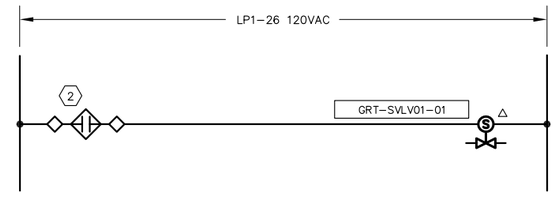

GRIT SYSTEM #3W SOLENOID VALVE (F)

SCALE: NTS

PANEL LP1 — VOLTAGE/PHASE 120/208V, 3ø, 4W — (1) — POLES 3 — MOUNTING FLUSH
LOCATION MCC-HW — MAIN BKR 100 A — BUS 100 A — PANEL BKR'S BOLT-ON

	LOAD DESCRIPTION	WATTAGE øA	WATTAGE øB	WATTAGE øC	TRIP	CKT.	S/N A B C	CKT.	TRIP	WATTAGE øA	WATTAGE øB	WATTAGE øC	LOAD DESCRIPTION	
	MCC ROOM LIGHTING	460			20	1		2	20	1099			SITE LIGHTING	* AND **
	MCC ROOM OUTLETS		900		20	3		4	20		270		SITE LIGHTING	* AND **
	SITE OUTLETS			540	20	5		6	20			540	SITE OUTLETS	**
	SPARE	–			20	7		8	20	200			ULTRASONIC TRANS. – EQUAL. BASINS	
	ULTRASONIC TRANS. – SCREENING FLUME		200		20	9		10	20		100		EQUALIZATION FLOWMETER	
	EQUAL. BASIN SOLENOID VALVES			150	20	11		12	20			450	CLARIFIER BUBBLER PANEL	**
	PRIMARY CLARIFIER OUTLETS	540			20	13		14	20	200			SLUDGE/SCUM FLOWMETERS	
	SPARE		–		20	15		16	20		–		GRIT PUMP AREA OUTLETS	**
	SCADA CONTROL PANEL			1000	20	17		18	20			150	ULTRASONIC TRANS. – FILTER INFLUENT PIT	
	SPARE				20	19		20	20	350			DIESEL TANK LEAK DETECTION SYSTEM	**
	SCUM SOLENOID VALVE CONTROL		50		20	21		22	20		100		EQUALIZATION 1 SOLENOID VALVES	
	SCUM PUMPS LOW LOW LEVEL INTERLOCKS			25	20	23		24	20			150	EQUALIZATION 2 SOLENOID VALVES	
	FIRE ALARM CONTROL PANEL	250			20	25		26	20	50			GRIT SYSTEM # 3W SOLENOID VALVE	
	CLARIFIER LIGHTS		571		20	27		28	20		360		EQUAL AREA OUTLETS	**
**	FERRIC CHLORIDE TANK LEVEL TRANS.			150	20	29		30	20			360	TURNTABLE AREA OUTLETS	**
**	EMERGENCY EYEWASH	50			20	31		32	20				SPIRAL SCREEN AREA OUTLETS	
**	FERRIC CHLORIDE TANK CONTROL PANEL		350		20	33		34	20	200			AUTOMATIC REFRIGERATED SAMPLER	
	SPARE				20	35		36	20				SPARE	
	SPARE				20	37		38	20				SPARE	
	SPARE				20	39		40	20				SPARE	
	SPARE				20	41		42	20				SPARE	
	SUBTOTAL	1300	2071	1865						2099	830	1650		
				TOTAL = 9815						AMPERES = 27.24 @ 208V, 3ø				

* VIA TIME CLOCK IN MCC-HW
** 2#10, #10GND – 3/4"C

PANEL "LP1" SCHEDULE (D)

SCALE: NTS

FILENAME: 286F_E09 11-18-16 08:34am LocDo || XREFS: X-SMCSD-TBLK | MTakemoto-PE-stamp |<c--
Last Saved By: LocDo 11-11-16 09:25am

REGISTERED PROFESSIONAL ENGINEER — DEEP TAN NGUYEN — No. E18017 — ELECTRICAL — STATE OF CALIFORNIA — 11/18/16

0" 1" — VERIFY SCALES — BAR IS ONE INCH LONG ON FULL SIZE DRAWING. IF NOT ONE INCH LONG ON THIS DRAWING, ADJUST SCALES ACCORDINGLY

ENGINEERS, INC. Oakland, San Francisco, Orange County, Ca.

RMC water and environment

REV	DATE	BY	APVD	DESCRIPTION
1				
2				
3				
4				
5				

DESIGNED TP
DRAWN LD
CHECKED DN

SUBMITTED: MARK TAKEMOTO, RMC PROJECT ENGINEER CE-64369
APPROVED: STEVE CLARY, RMC ENGINEER CE-30318

SAUSALITO • MARIN CITY SANITARY DISTRICT

TREATMENT AND WET WEATHER FLOW UPGRADE

CONTROL SCHEMATIC DIAGRAMS SHEET 4 OF 4 AND PANEL BOARD SCHEDULE

DWG NO E-9
SHEET NO 173 OF 226
PROJ NO 055-006
DATE NOVEMBER 2016

SHEET NOTES:

1. SCUM PIT IS A HAZARDOUS LOCATION. FURNISH AND INSTALL AN INTRINSICALLY SAFE RELAY FOR CONNECTION TO THE FLOAT SWITCH.
2. THIS CONTROL ONE-LINE DIAGRAM IS SUPPLEMENTARY TO THE CABLE AND CONDUIT SCHEDULE AND DOES NOT COVER ALL REQUIRED SIGNALS AND CONDUITS SHOWN ON THE PLANS.

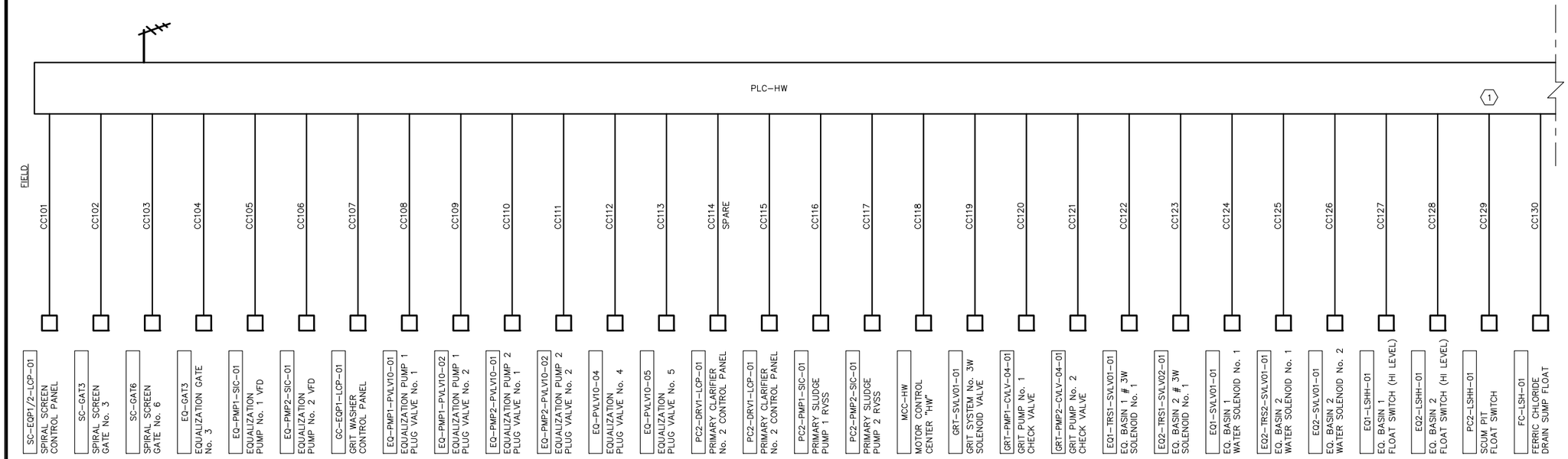

PLC-HW-CONTROL SYSTEM ONE-LINE DIAGRAM (A) (2)

SCALE: NTS

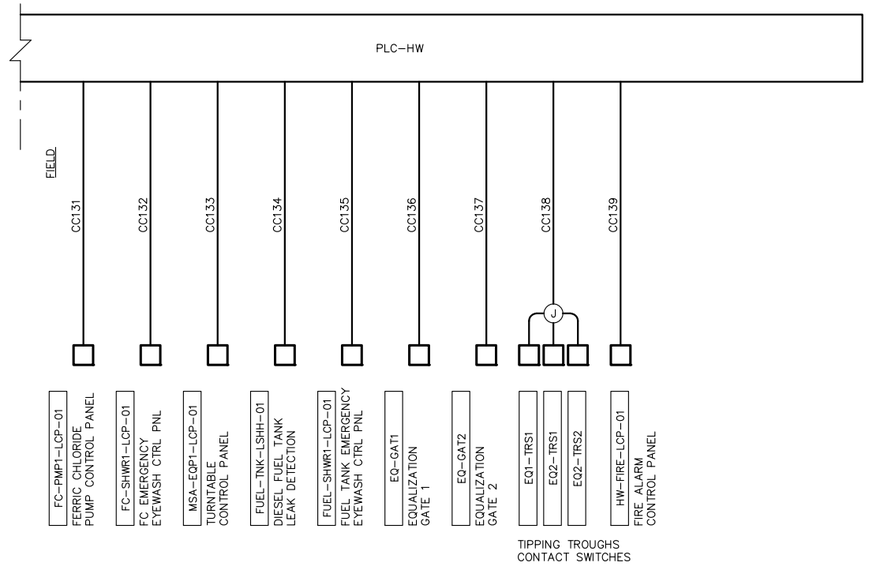

PLC-HW-CONTROL SYSTEM ONE-LINE DIAGRAM (CONTINUED)

SCALE: NTS

REGISTERED PROFESSIONAL ENGINEER — DEEP TAN NGUYEN — No. E18008 — 8/30/17 — ELECTRICAL — STATE OF CALIFORNIA

11/18/16

0" 1" — VERIFY SCALES — BAR IS ONE INCH LONG ON FULL SIZE DRAWING. IF NOT ONE INCH LONG ON THIS DRAWING, ADJUST SCALES ACCORDINGLY

ENGINEERS, INC. Oakland, San Francisco, Orange County, Ca.

RMC water and environment

REV	DATE	BY	APVD	DESCRIPTION
1				
2				
3				
4				
5				

DESIGNED	TP
DRAWN	LD
CHECKED	DN

SUBMITTED: MARK TAKEMOTO, RMC PROJECT ENGINEER CE-64369

APPROVED: STEVE CLARY, RMC ENGINEER CE-30318

SAUSALITO · MARIN CITY SANITARY DISTRICT

TREATMENT AND WET WEATHER FLOW UPGRADE

CONTROL ONE-LINE DIAGRAMS SHEET 1 OF 2

DWG NO	E-10
SHEET NO	174 OF 226
PROJ NO	055-006
DATE	NOVEMBER 2016

FILENAME: 286F_E10 11-18-16 09:51am LocDo ‖ XREFS:‖ X-SMCSD-TBLK | MTakemoto-PE-stamp |<<--

Last Saved By: LocDo 11-18-16 09:50am

SHEET NOTES:

1. THIS EXISTING PLC IS TO BE REMOVED AND REPLACED WITH NEW PLC. SEE DRAWINGS E-15A AND E-15B FOR DETAILS.
2. THIS PLC IS EXISTING AND PROVIDED WITH NEW I/O CARDS TO ACCOMMODATE NEW SIGNALS. MODIFICATIONS OF EXISTING PANEL ARE REQUIRED PRIOR TO INSTALLING NEW RACK AND I/O CARDS. SEE DETAIL C/E-32.
3. THIS PLC IS EXISTING AND PROVIDED WITH NEW I/O CARDS TO ACCOMMODATE NEW SIGNALS. EXISTING RACKS ARE AVAILABLE FOR INSTALLATION OF NEW I/O CARDS. NO NEW RACKS ARE REQUIRED. SEE DRAWING E-25 FOR THE MAIN PLANT PLC LOCATION.

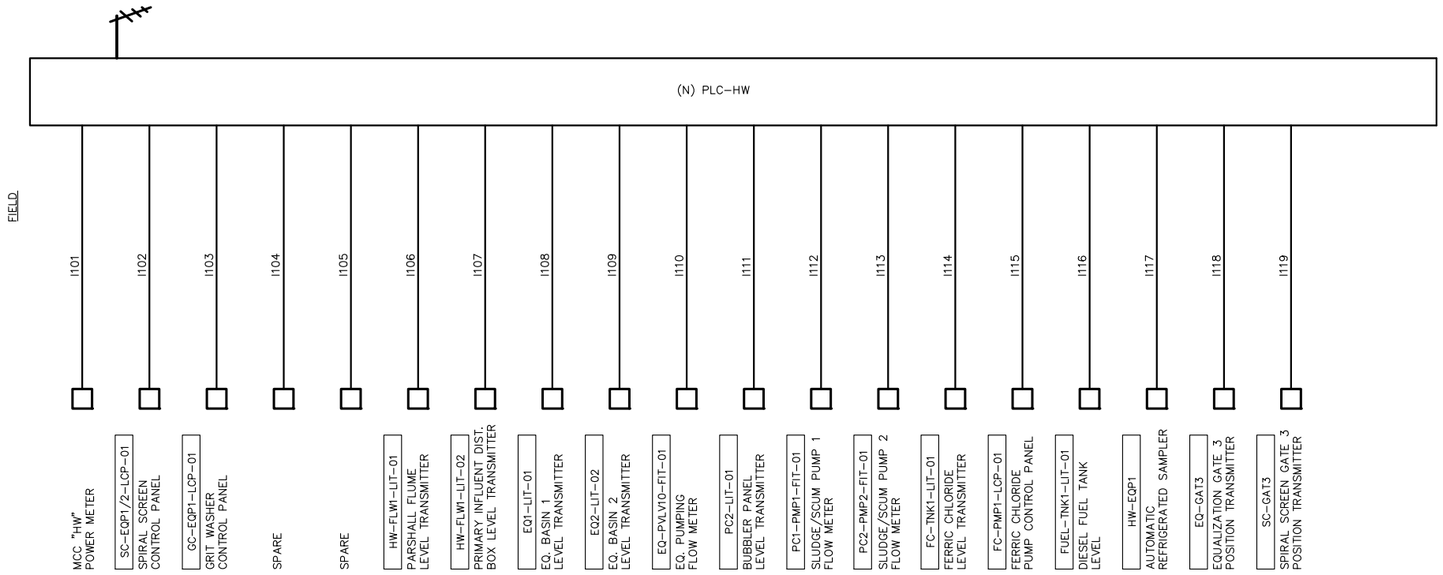

PLC-HW-CONTROL SYSTEM ONE-LINE DIAGRAM (A)

SCALE: NTS

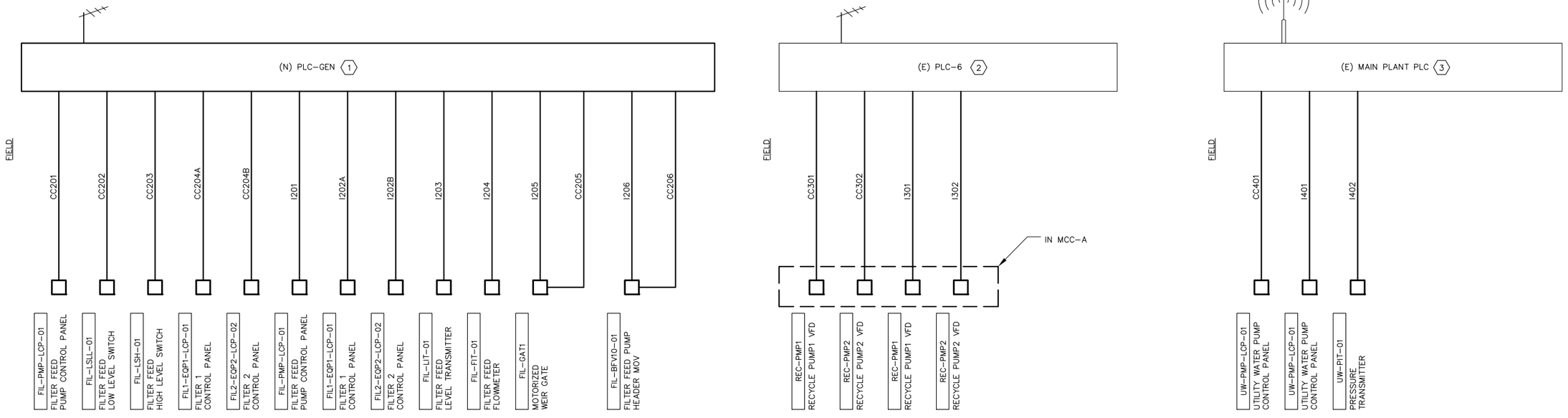

PLC-GEN CONTROL SYSTEM ONE-LINE DIAGRAM (B)

SCALE: NTS

FILENAME: 286F_E11 11-18-16 08:34am LocDo | XREFS: | X-SMCSD-TBLK | MTakemoto-PE-stamp |<<--
Last Saved By: LocDo 11-11-16 09:26am



11/18/16

0" 1" VERIFY SCALES — BAR IS ONE INCH LONG ON FULL SIZE DRAWING. IF NOT ONE INCH LONG ON THIS DRAWING, ADJUST SCALES ACCORDINGLY	

ENGINEERS, INC. Oakland, San Francisco, Orange County, Ca.

RMC water and environment

REV	DATE	BY	APVD	DESCRIPTION
1				
2				
3				
4				
5				

DESIGNED	TP
DRAWN	LD
CHECKED	DN

SUBMITTED: MARK TAKEMOTO, RMC PROJECT ENGINEER CE-64369

APPROVED: STEVE CLARY, RMC ENGINEER CE-30318

SAUSALITO · MARIN CITY SANITARY DISTRICT

TREATMENT AND WET WEATHER FLOW UPGRADE

CONTROL ONE-LINE DIAGRAMS SHEET 2 OF 2

DWG NO	E-11
SHEET NO	175 OF 226
PROJ NO	055-006
DATE	NOVEMBER 2016

SHEET NOTES:

1. PROVIDE FUSES FU-07 TO FU-10 TO POWER I/O CARDS.
2. THIS UPS SHALL BE USED TO PROVIDE REDUNDANT POWER BACKUP TO THE RADIO. COMPLETE WIRING DIAGRAM SHALL BE PROVIDED IN THE SHOP DRAWINGS FOR REVIEW AND APPROVAL. (ADDITIONAL AUXILIARY DEVICES SUCH AS 24 VDC CONVERTER AND DC WIRING FOR REDUNDANT POWER BACK UP ARE REQUIRED.)
3. SEE WIRING DIAGRAM ON DRAWING E-16 FOR EXACT INTERNAL WIRING REQUIREMENTS BETWEEN COMPONENTS IN THIS CONTROL PANEL.

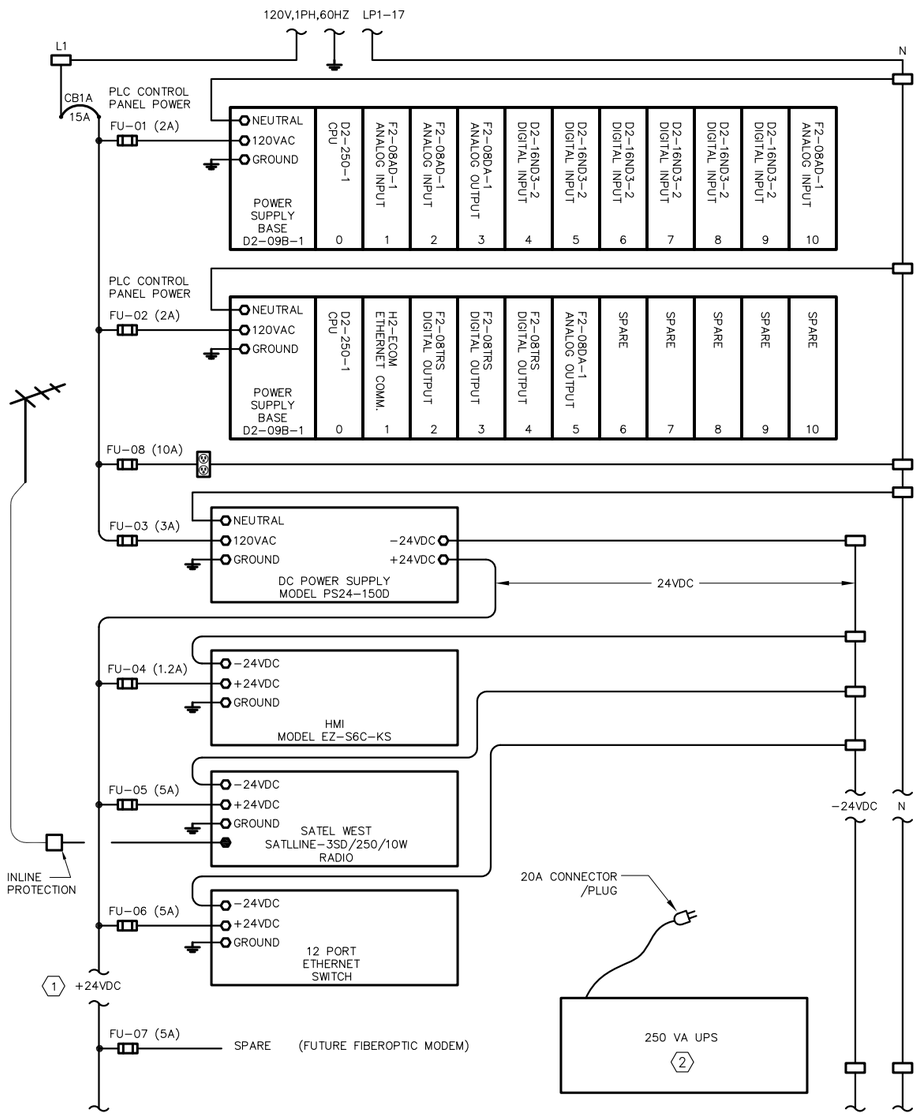

PLC-HW INTERNAL POWER CONFIGURATION (A) (3)

SCALE: NTS

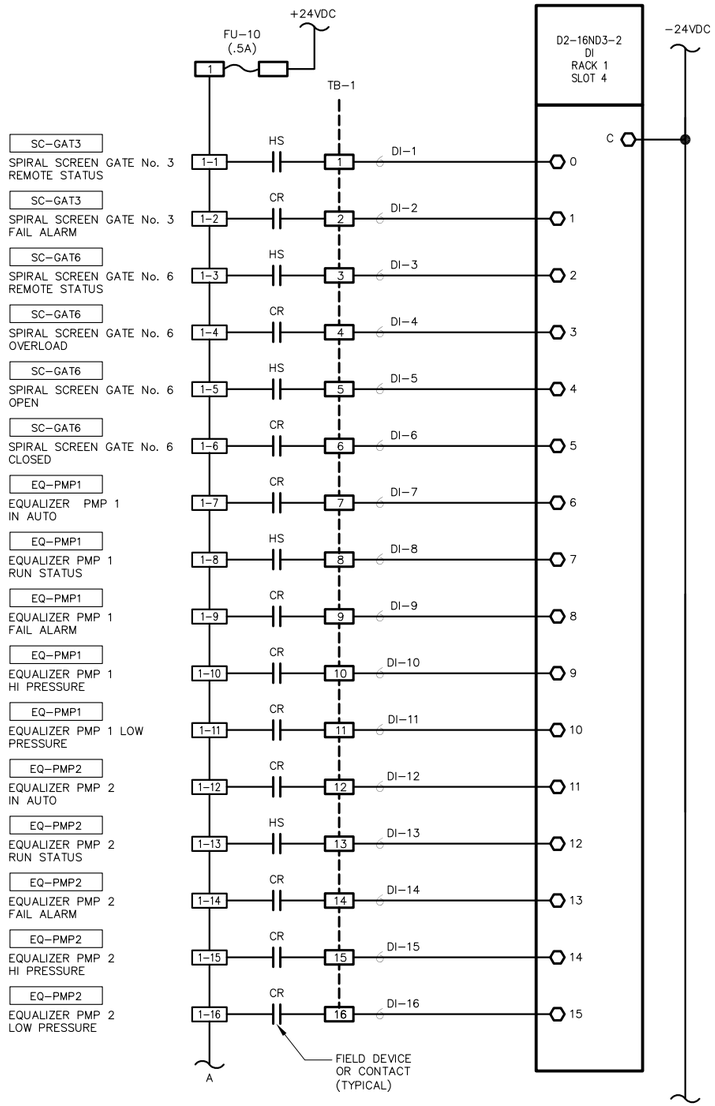

PLC-HW WIRING DIAGRAMS (B)

SCALE: NTS

REGISTERED PROFESSIONAL ENGINEER DIEP TAN NGUYEN No. E17008 ELECTRICAL STATE OF CALIFORNIA
11/18/16

0" — 1" VERIFY SCALES — BAR IS ONE INCH LONG ON FULL SIZE DRAWING. IF NOT ONE INCH LONG ON THIS DRAWING, ADJUST SCALES ACCORDINGLY

ENGINEERS, INC. Oakland, San Francisco, Orange County, Ca

RMC water and environment

REV	DATE	BY	APVD	DESCRIPTION
1				
2				
3				
4				
5				

DESIGNED TP
DRAWN LD
CHECKED DN

SUBMITTED: MARK TAKEMOTO
RMC PROJECT ENGINEER CE-64369

APPROVED: STEVE CLARY
RMC ENGINEER CE-30318

SAUSALITO · MARIN CITY SANITARY DISTRICT

TREATMENT AND WET WEATHER FLOW UPGRADE

SCADA PLC WIRING DIAGRAMS PLC - HW - SHEET 1 OF 4

DWG NO E-12
SHEET NO 176 OF 226
PROJ NO 055-006
DATE NOVEMBER 2016

FILENAME: 286F_E12 11-18-16 08:34am LocDo || XREFS: X-SMCSD-TBLK | MTakemoto-PE-stamp |<<--
Last Saved By: LocDo 11-11-16 09:27am

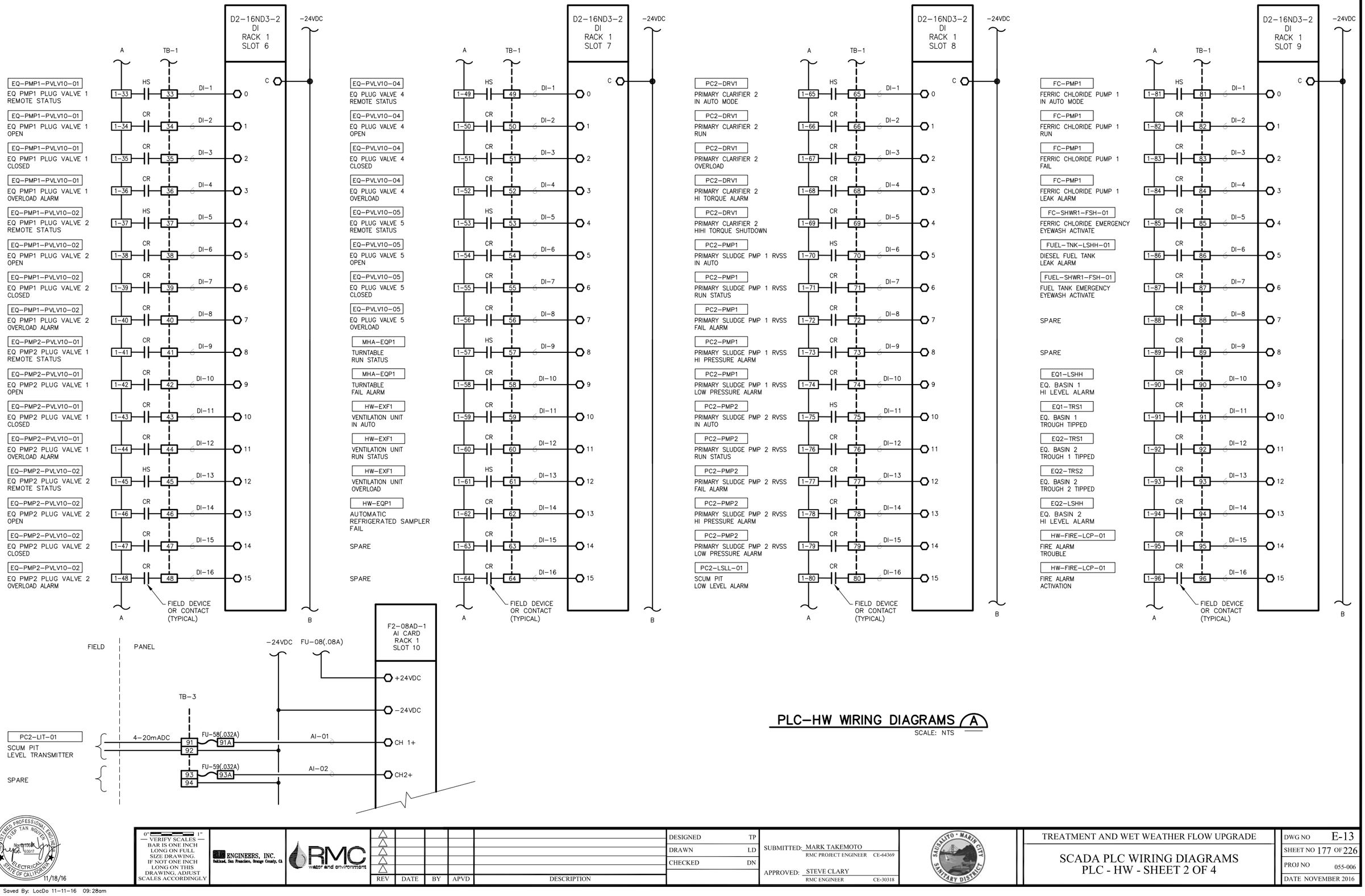

PLC-HW WIRING DIAGRAMS (A)

SCALE: NTS

FILENAME: 286F_E13 11-18-16 08:34am LocDo || XREFS|| X-SMCSD-TBLK | MTakemoto-PE-stamp |<--

Last Saved By: LocDo 11-11-16 09:28am

REGISTERED PROFESSIONAL ENGINEER — DIEP TAN NGUYEN — No. E19017 — ELECTRICAL — STATE OF CALIFORNIA — 11/18/16

0" 1" — VERIFY SCALES — BAR IS ONE INCH LONG ON FULL SIZE DRAWING. IF NOT ONE INCH LONG ON THIS DRAWING, ADJUST SCALES ACCORDINGLY

ENGINEERS, INC. Oakland, San Francisco, Orange County, Ca.

RMC water and environment

REV	DATE	BY	APVD	DESCRIPTION

DESIGNED	TP
DRAWN	LD
CHECKED	DN

SUBMITTED: MARK TAKEMOTO, RMC PROJECT ENGINEER CE-64369

APPROVED: STEVE CLARY, RMC ENGINEER CE-30318

SAUSALITO • MARIN CITY SANITARY DISTRICT

TREATMENT AND WET WEATHER FLOW UPGRADE

SCADA PLC WIRING DIAGRAMS PLC - HW - SHEET 2 OF 4

DWG NO	E-13
SHEET NO	177 OF 226
PROJ NO	055-006
DATE	NOVEMBER 2016

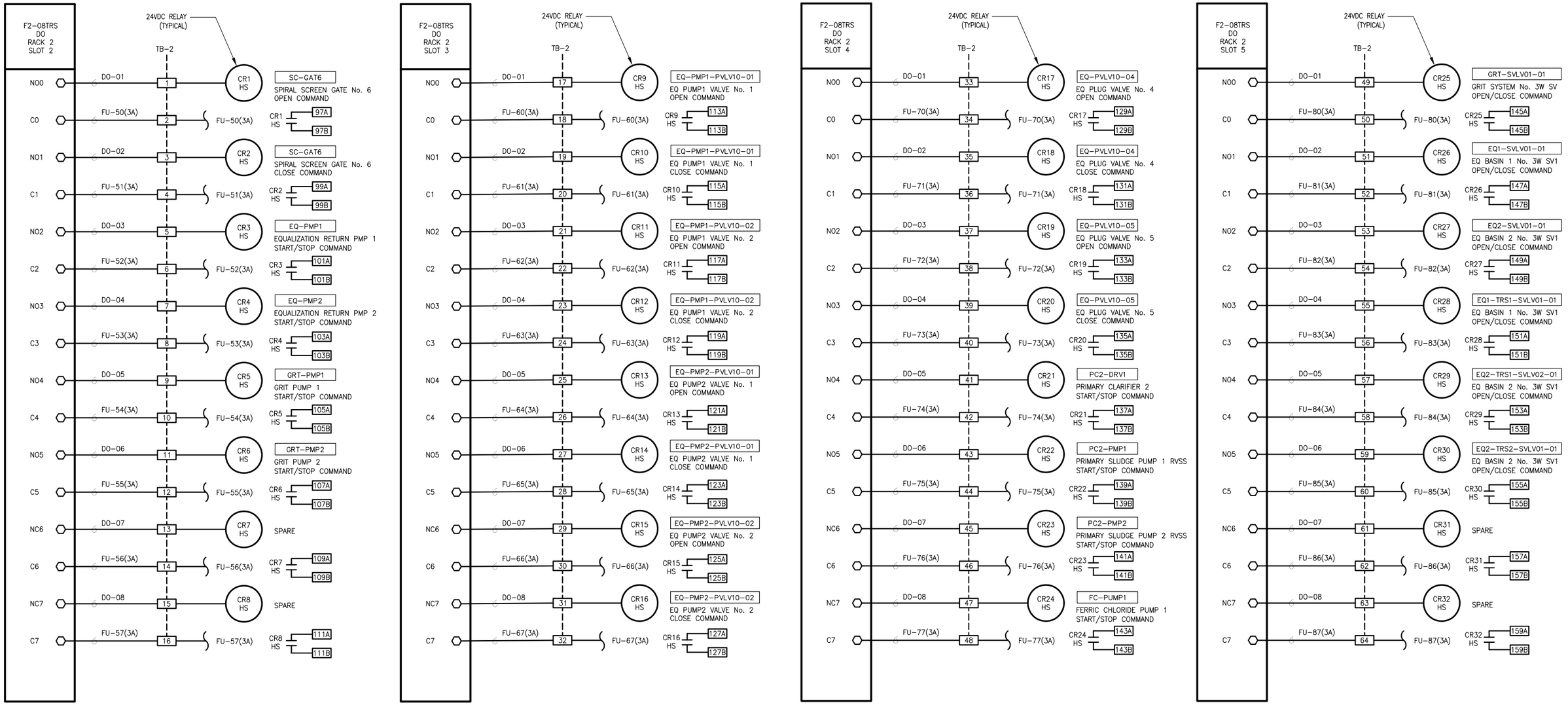

PLC-HW WIRING DIAGRAMS (A)

SCALE: NTS

FILENAME: 286F_E14 11-18-16 08:34am LocDo | XREFS: | X-SMCSD-TBLK | MTakemoto-PE-stamp |<<--

REGISTERED PROFESSIONAL ENGINEER — DIEP TAN NGUYEN — No. E17008 — 8/30/17 — ELECTRICAL — STATE OF CALIFORNIA
11/18/16

0" 1" — VERIFY SCALES — BAR IS ONE INCH LONG ON FULL SIZE DRAWING. IF NOT ONE INCH LONG ON THIS DRAWING, ADJUST SCALES ACCORDINGLY

ENGINEERS, INC. Oakland, San Francisco, Orange County, Ca

RMC water and environment

REV	DATE	BY	APVD	DESCRIPTION
1				
2				
3				
4				
5				

DESIGNED TP
DRAWN LD
CHECKED DN

SUBMITTED: MARK TAKEMOTO, RMC PROJECT ENGINEER CE-64369
APPROVED: STEVE CLARY, RMC ENGINEER CE-30318

SAUSALITO · MARIN CITY SANITARY DISTRICT

Last Saved By: LocDo 11-11-16 09:29am

TREATMENT AND WET WEATHER FLOW UPGRADE

SCADA PLC WIRING DIAGRAMS
PLC - HW - SHEET 3 OF 4

DWG NO E-14
SHEET NO 178 OF 226
PROJ NO 055-006
DATE NOVEMBER 2016

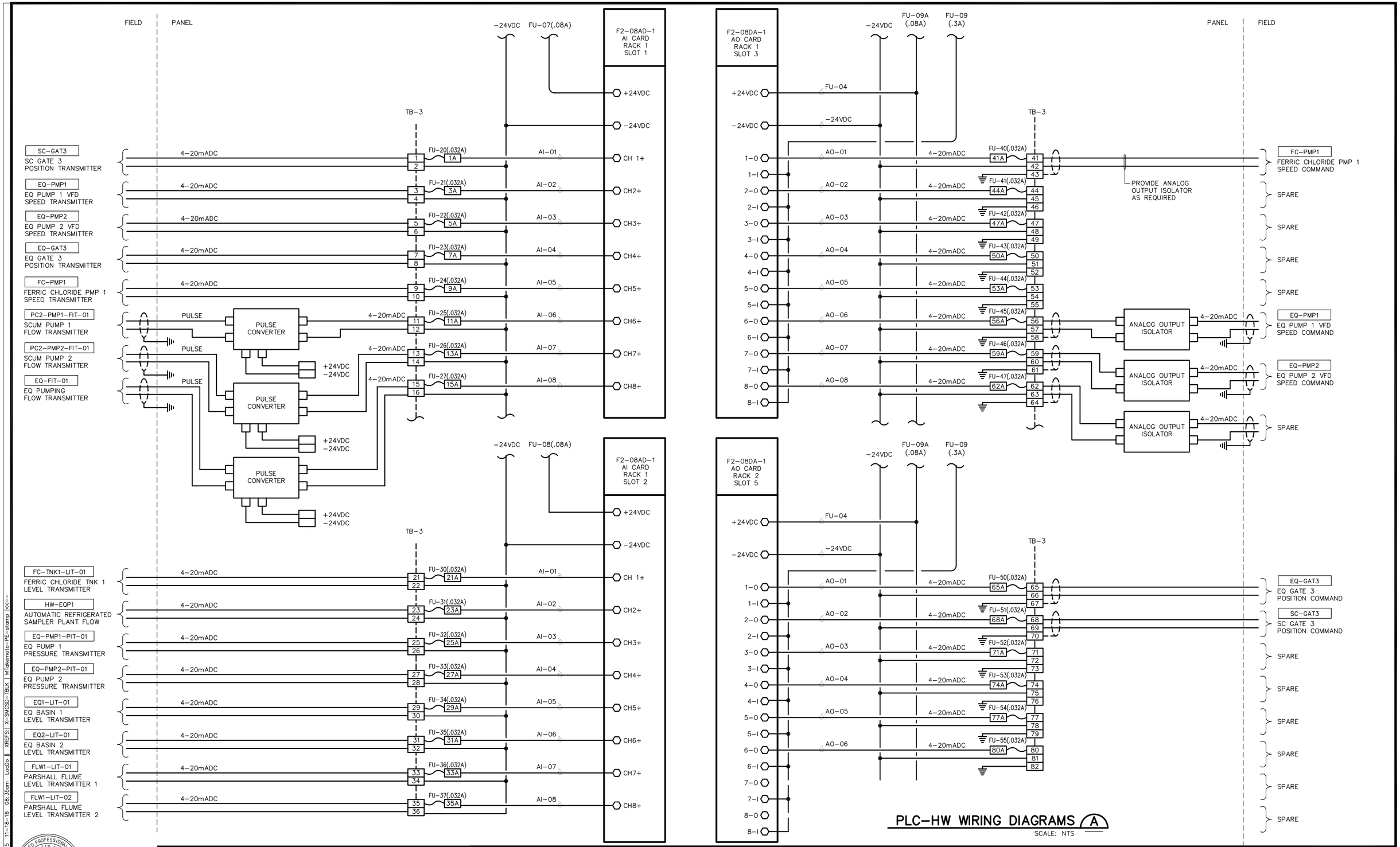

PLC-HW WIRING DIAGRAMS (A)

SCALE: NTS

REGISTERED PROFESSIONAL ENGINEER
DIEP TAN NGUYEN
No. E-10567
Exp. 6/30/17
ELECTRICAL
STATE OF CALIFORNIA
11/18/16

0" 1"
VERIFY SCALES
BAR IS ONE INCH LONG ON FULL SIZE DRAWING. IF NOT ONE INCH LONG ON THIS DRAWING, ADJUST SCALES ACCORDINGLY

ENGINEERS, INC.
Oakland, San Francisco, Orange County, CA

RMC water and environment

REV	DATE	BY	APVD	DESCRIPTION

DESIGNED	TP
DRAWN	LD
CHECKED	DN

SUBMITTED: MARK TAKEMOTO
RMC PROJECT ENGINEER CE-64369

APPROVED: STEVE CLARY
RMC ENGINEER CE-30318

SAUSALITO MARIN CITY SANITARY DISTRICT

TREATMENT AND WET WEATHER FLOW UPGRADE

SCADA PLC WIRING DIAGRAMS
PLC - HW - SHEET 4 OF 4

DWG NO	E-15
SHEET NO	179 OF 226
PROJ NO	055-006
DATE	NOVEMBER 2016

FILENAME: 286F_E15 11-18-16 08:35am LocDo || XREFS:| X-SMCSD-TBLK | MTakemoto-PE-stamp |<<--

Last Saved By: LocDo 11-11-16 09:17am

SHEET NOTES:

1. PROVIDE FUSES FU-05 TO FU-09 TO POWER I/O CARDS.
2. THIS UPS SHALL BE USED TO PROVIDE REDUNDANT POWER BACKUP TO THE RADIO. COMPLETE WIRING DIAGRAM SHALL BE PROVIDED IN THE SHOP DRAWINGS FOR REVIEW AND APPROVAL. (ADDITIONAL AUXILIARY DEVICES SUCH AS 24 VDC CONVERTER AND DC WIRING FOR REDUNDANT POWER BACK UP ARE REQUIRED.)
3. SEE WIRING DIAGRAM ON DRAWING E-16 FOR EXACT INTERNAL WIRING REQUIREMENTS BETWEEN COMPONENTS IN THIS CONTROL PANEL.
4. EXISTING WIRINGS OF EXISTING SIGNALS SHOWN SHALL BE FIELD VERIFIED AND IDENTIFIED PRIOR TO DISCONNECTION AND REMOVAL OF EXISTING CONTROL PANEL AND SHALL BE RECONNECTED COMPLETELY.
5. EXISTING FIELD WIRINGS TO BE RECONNECTED . (TYP)

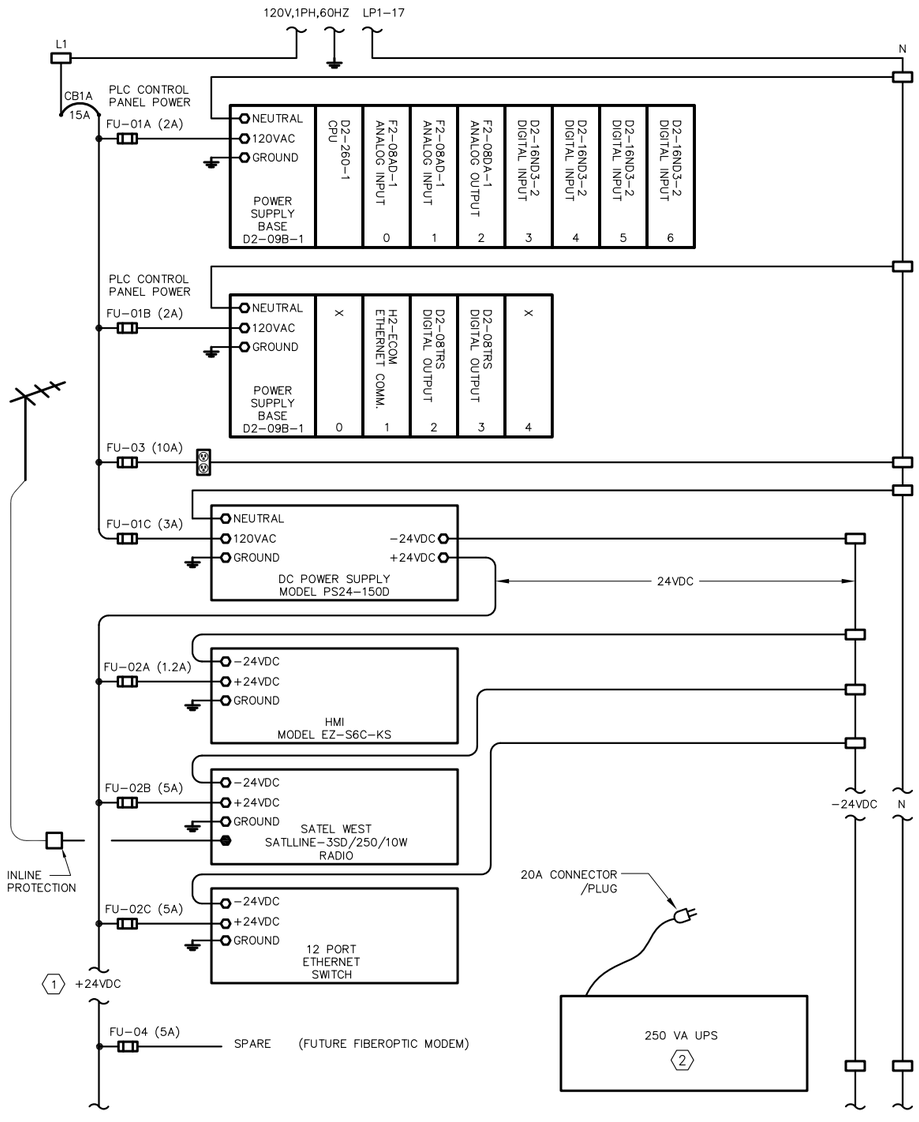

PLC-GEN INTERNAL POWER CONFIGURATION (A) (3)

SCALE: NTS

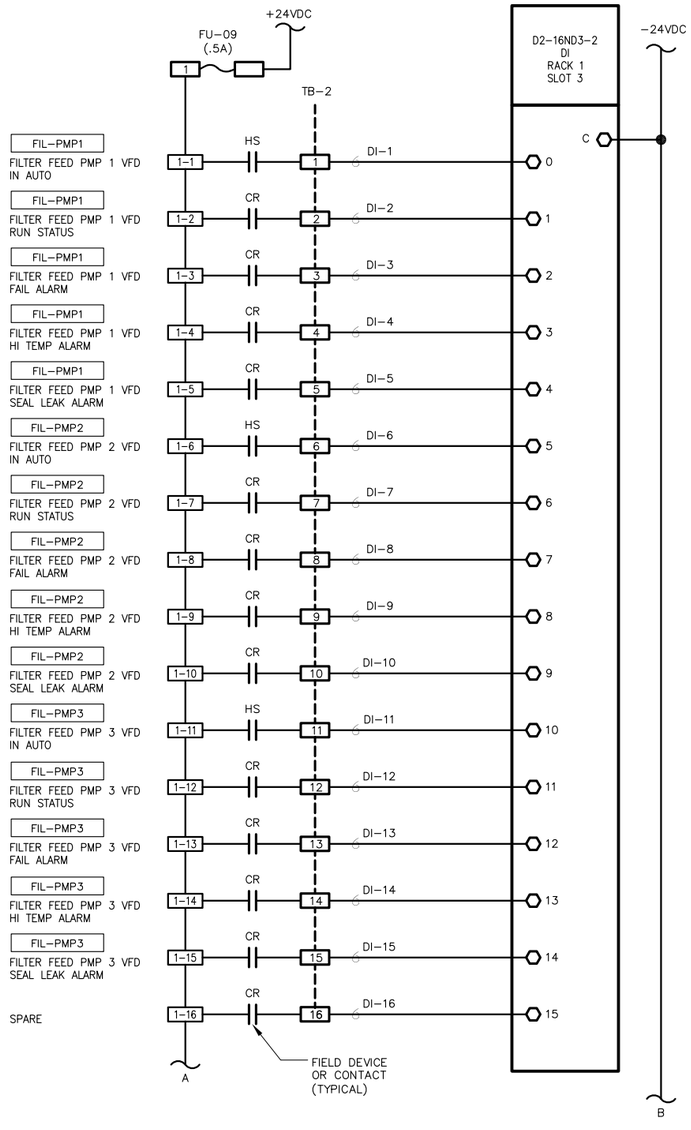

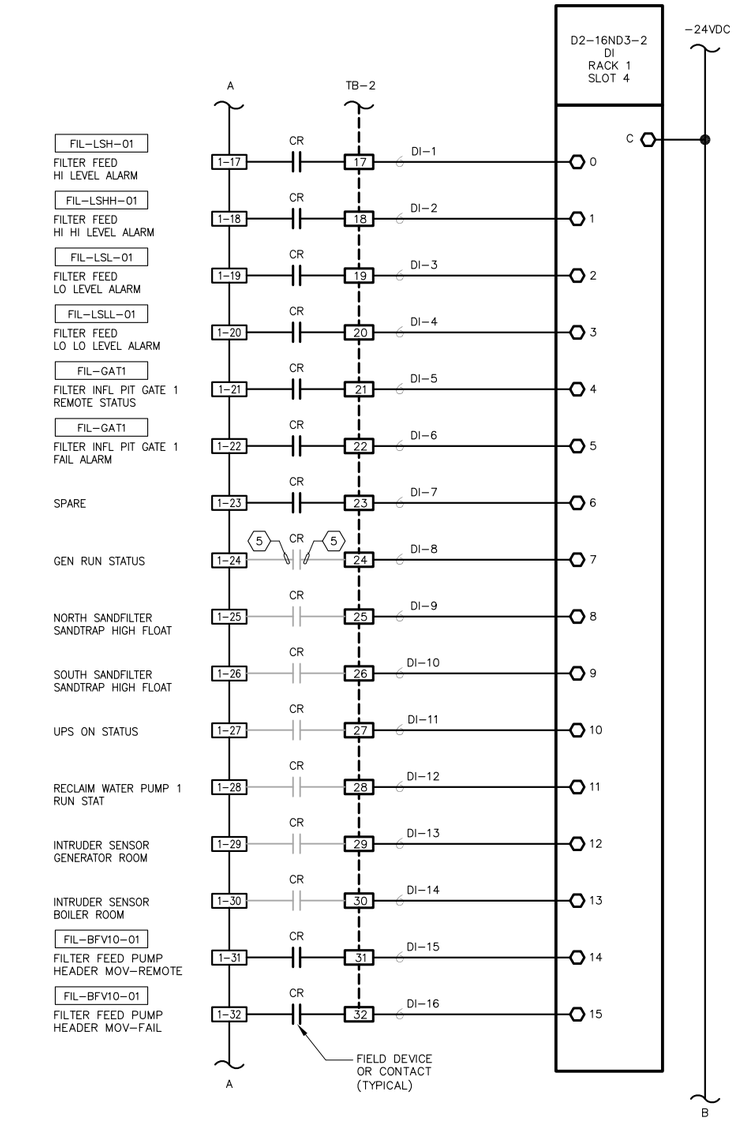

PLC-GEN WIRING DIAGRAMS (B) (4)

SCALE: NTS

FILENAME: 286F_E15A 11-18-16 08:35am LocDo | XREFS: | X-SMCSD-TBLK | MTakemoto-PE-stamp |<c--

Last Saved By: tp 11-11-16 09:14am

11/18/16

0" — 1" VERIFY SCALES — BAR IS ONE INCH LONG ON FULL SIZE DRAWING. IF NOT ONE INCH LONG ON THIS DRAWING, ADJUST SCALES ACCORDINGLY

ENGINEERS, INC. Oakland, San Francisco, Orange County, Ca.

RMC water and environment

REV	DATE	BY	APVD	DESCRIPTION

DESIGNED	TP
DRAWN	LD
CHECKED	DN

SUBMITTED: MARK TAKEMOTO, RMC PROJECT ENGINEER CE-64369

APPROVED: STEVE CLARY, RMC ENGINEER CE-30318

SAUSALITO · MARIN CITY SANITARY DISTRICT

TREATMENT AND WET WEATHER FLOW UPGRADE

SCADA PLC WIRING DIAGRAMS PLC - GEN - SHEET 1 OF 2

DWG NO	E-15A
SHEET NO	180 OF 226
PROJ NO	055-006
DATE	NOVEMBER 2016

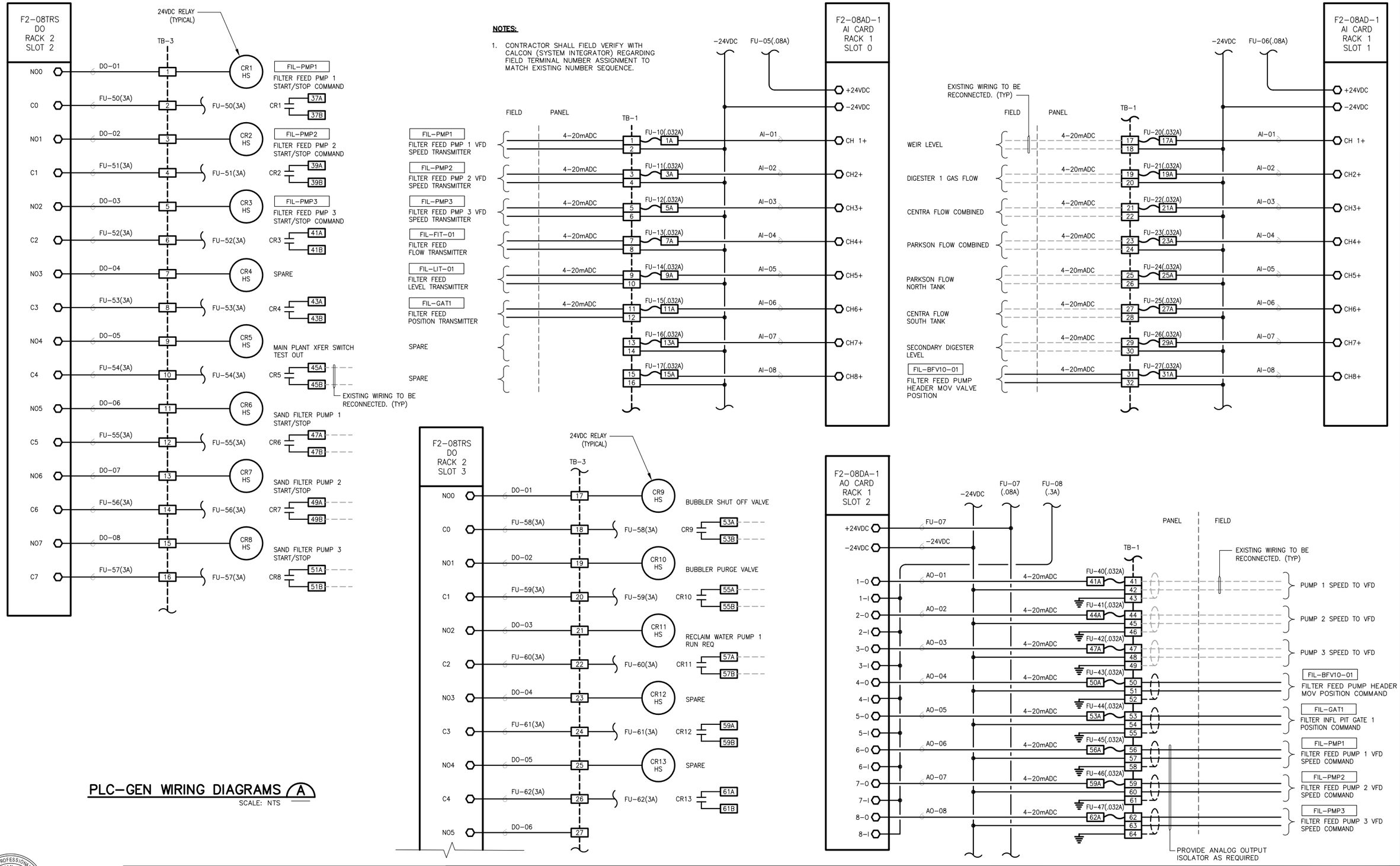

PLC-GEN WIRING DIAGRAMS (A)

SCALE: NTS

REGISTERED PROFESSIONAL ENGINEER DIEP TAN NGUYEN No. E17668 6/30/17 ELECTRICAL STATE OF CALIFORNIA

11/18/16

0" 1" — VERIFY SCALES — BAR IS ONE INCH LONG ON FULL SIZE DRAWING. IF NOT ONE INCH LONG ON THIS DRAWING, ADJUST SCALES ACCORDINGLY

ENGINEERS, INC. Oakland, San Francisco, Orange County, Ca.

RMC water and environment

REV	DATE	BY	APVD	DESCRIPTION

DESIGNED	TP
DRAWN	LD
CHECKED	DN

SUBMITTED: MARK TAKEMOTO, RMC PROJECT ENGINEER CE-64369

APPROVED: STEVE CLARY, RMC ENGINEER CE-30318

SAUSALITO · MARIN CITY SANITARY DISTRICT

TREATMENT AND WET WEATHER FLOW UPGRADE

SCADA PLC WIRING DIAGRAM
PLC - GEN - SHEET 2 OF 2

DWG NO	E-15B
SHEET NO	181 OF 226
PROJ NO	055-006
DATE	NOVEMBER 2016

FILENAME: 286F_E15B 11-18-16 08:35am LocDo || XREFS: | X-SMCSD-TBLK | MTakemoto-PE-stamp |<<--

Last Saved By: LocDo 11-11-16 11:17am

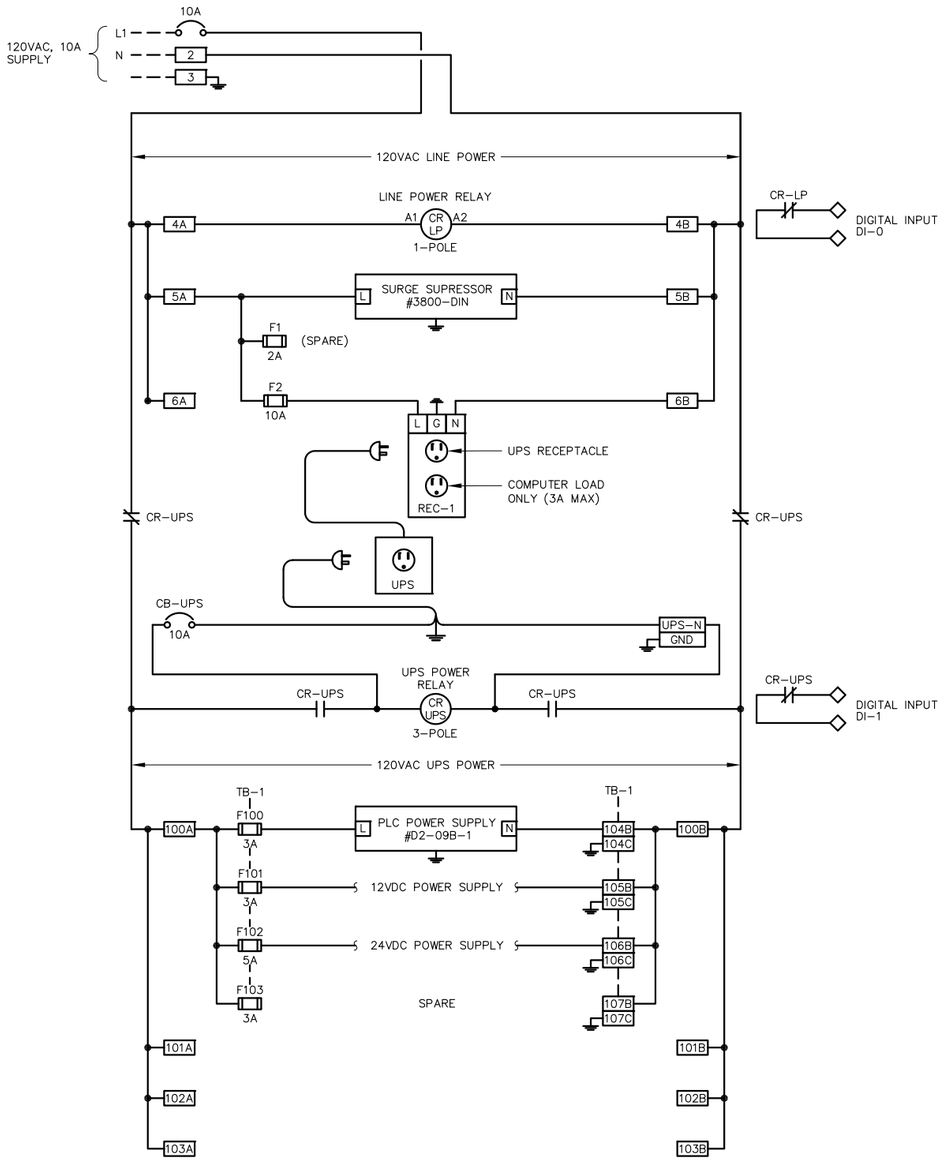

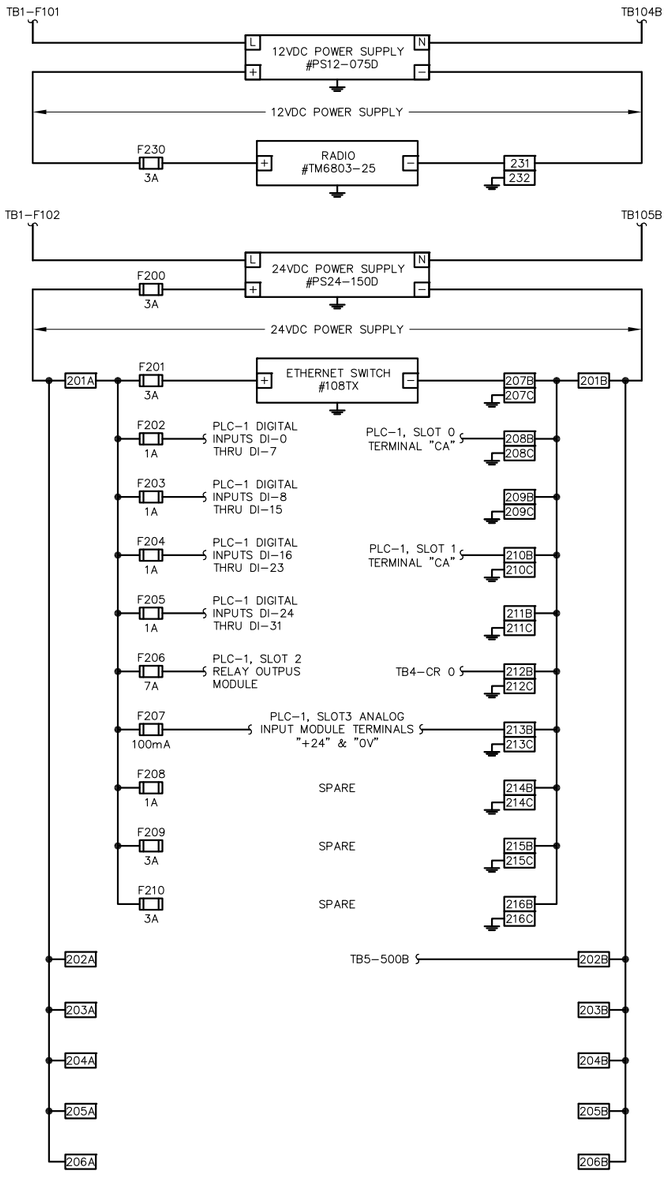

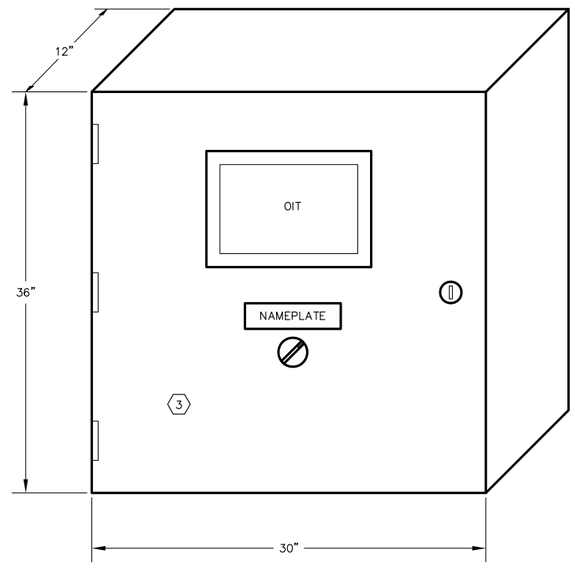

CONTROL PANEL (B) (1)(2)
SCALE: NTS

SHEET NOTES:

1. THIS WIRING DIAGRAM DETAIL AND THE CONTROL PANEL DETAIL ARE APPLICABLE TO NEW CONTROL PANEL CP-HW (HEADWORKS) AND CP-GEN (GENERATOR BUILDING).
2. ALL EQUIPMENT SHOWN SHALL BE FURNISHED & INSTALLED BY CALCON AS PER THE DISTRICT'S LATEST SCADA STANDARDS.
3. INTERNAL COMPONENTS SUCH AS PLC, I/O CARD, ETHERNET SWITCHES, POWER SUPPLIES, UPS ETC ARE NOT SHOWN. SEE DETAILED WIRING DIAGRAM AND RELATED WIRING DIAGRAMS.
4. THE TERMINAL NUMBERS SHOWN ON THIS WIRING DIAGRAM ARE FOR ILLUSTRATION PURPOSES ONLY. EXACT TERMINAL NUMBERS SHALL BE ASSIGNED BY THE MANUFACTURER IN THE SHOP DRAWING SUBMITTAL AS PER REQUIREMENTS IN DIV 13 OF THE SPECIFICATIONS.

CONTROL PANEL TYPICAL INTERNAL WIRING (A) (1)(2)(4)
SCALE: NTS

FILENAME: 286F_E16 11-18-16 08:41am LocDo || XREFS: | X-SMCSD-TBLK | MTakemoto-PE-stamp |<<--
Last Saved By: LocDo 11-11-16 09:31am

REGISTERED PROFESSIONAL ENGINEER DIEP TAN NGUYEN No. E17008 6/30/17 ELECTRICAL STATE OF CALIFORNIA
11/18/16

0" 1" — VERIFY SCALES — BAR IS ONE INCH LONG ON FULL SIZE DRAWING. IF NOT ONE INCH LONG ON THIS DRAWING, ADJUST SCALES ACCORDINGLY

ENGINEERS, INC. Oakland, San Francisco, Orange County, Ca

RMC water and environment

REV	DATE	BY	APVD	DESCRIPTION
1				
2				
3				
4				
5				

DESIGNED TP
DRAWN LD
CHECKED DN

SUBMITTED: MARK TAKEMOTO, RMC PROJECT ENGINEER CE-64369
APPROVED: STEVE CLARY, RMC ENGINEER CE-30318

SAUSALITO · MARIN CITY SANITARY DISTRICT

TREATMENT AND WET WEATHER FLOW UPGRADE

SCADA PLC WIRING DIAGRAM INTERNAL POWER DISTIBUTION

DWG NO E-16
SHEET NO 182 OF 226
PROJ NO 055-006
DATE NOVEMBER 2016

CONDUIT SCHEDULE (1)(2)

CONDUIT No.	CONDUIT SIZE	TYPE	FROM	TO	CABLES	NOTES
MS-P-400	2-3"	PVC & PVC-COATED RGS	NEW SERVICE TERMINATION PULL BOX	EXISTING MAIN SERVICE SWITCHBOARD	2(4-350Kcmil, #1/0 GND)	
P-400N	3"	PVC & PVC-COATED RGS	EXISTING MAIN SWITCHBOARD	NEW MOTOR CONTROL CENTER "HW"	3-300Kcmil, 4/0 GND	
P-401	1"	PVC & PVC-COATED RGS	SPIRAL SCREEN CONTROL PANEL	MOTOR CONTROL CENTER "HW"	3-#10, #10 GND	
P-401A	3/4"	PVC & PVC-COATED RGS	SPIRAL SCREEN SCREW No. 1	SPIRAL SCREEN CONTROL PANEL	3-#12, #12 GND	
P-401B	3/4"	PVC & PVC-COATED RGS	SPIRAL SCREEN SCREW No. 2	SPIRAL SCREEN CONTROL PANEL	3-#12, #12 GND	
P-401C	3/4"	PVC & PVC-COATED RGS	SPIRAL SCREEN SHAFTNESS CONVEYOR	SPIRAL SCREEN CONTROL PANEL	3-#12, #12 GND	
P-402	1"	PVC & PVC-COATED RGS	SPIRAL SCREEN GATE No. 3	MOTOR CONTROL CENTER "HW"	3-#12, #12 GND	
P-403	1"	PVC & PVC-COATED RGS	SPIRAL SCREEN GATE No. 6	MOTOR CONTROL CENTER "HW"	3-#12, #12 GND	
P-404	1"	PVC & PVC-COATED RGS	EQUALIZATION GATE No. 3	MOTOR CONTROL CENTER "HW"	3-#12, #12 GND	
P-405	1.5"	PVC & PVC-COATED RGS	EQUALIZATION PUMP No. 1	MOTOR CONTROL CENTER "HW"	3-#2, #8 GND	
P-406	1.5"	PVC & PVC-COATED RGS	EQUALIZATION PUMP No. 2	MOTOR CONTROL CENTER "HW"	3-#2, #8 GND	
P-407	1"	PVC & PVC-COATED RGS	GRIT PUMP No. 1	MOTOR CONTROL CENTER "HW"	3-#10, #10 GND AND 10 #14	
P-408	1"	PVC & PVC-COATED RGS	GRIT PUMP No. 2	MOTOR CONTROL CENTER "HW"	3-#10, #10 GND AND 10 #14	
P-409	1"	PVC & PVC-COATED RGS	GRIT WASHER CONTROL PANEL	MOTOR CONTROL CENTER "HW"		
P-409A	3/4"	PVC & PVC-COATED RGS	GRIT WASHER MIXER	GRIT WASHER CONTROL PANEL	3-#12, #12 GND	
P-409B	3/4"	PVC & PVC-COATED RGS	GRIT WASHER SCREW	GRIT WASHER CONTROL PANEL	3-#12, #12 GND	
P-409C	3/4"	PVC & PVC-COATED RGS	GRIT WASHER MOV	GRIT WASHER CONTROL PANEL	3-#12, #12 GND	
P-410	1"	PVC & PVC-COATED RGS	EQ PUMP 1 PLUG VALVE 1	MOTOR CONTROL CENTER "HW"	3-#10, #10 GND	
P-411	1"	PVC & PVC-COATED RGS	EQ PUMP 1 PLUG VALVE 2	MOTOR CONTROL CENTER "HW"	3-#10, #10 GND	
P-412	1"	PVC & PVC-COATED RGS	EQ PUMP 2 PLUG VALVE 1	MOTOR CONTROL CENTER "HW"	3-#10, #10 GND	
P-413	1"	PVC & PVC-COATED RGS	EQ PUMP 2 PLUG VALVE 2	MOTOR CONTROL CENTER "HW"	3-#10, #10 GND	
P-414	1"	PVC & PVC-COATED RGS	EQ PLUG VALVE No. 4	MOTOR CONTROL CENTER "HW"	3-#10, #10 GND	
P-415	1"	PVC & PVC-COATED RGS	EQ PLUG VALVE No. 5	MOTOR CONTROL CENTER "HW"	3-#10, #10 GND	
P-416	2"	PVC-COATED RGS	–	MOTOR CONTROL CENTER "HW"	–	SPARE
P-417	1"	PVC & PVC-COATED RGS	TURNTABLE CONTROL PANEL	MOTOR CONTROL CENTER "HW"	3-#10, #10 GND	
P-418	1"	PVC & PVC-COATED RGS	15KVA TRANSFORMER (PRIMARY)	MOTOR CONTROL CENTER "HW"	3#8, #10 GND	INTERNAL MCC WIRING
P-218A	1"	PVC & PVC-COATED RGS	15KVA TRANSFORMER (SECONDARY)	MOTOR CONTROL CENTER "HW" – LIGHTING PANEL "LP1"	3#4, #8 GND	INTERNAL MCC WIRING
P-419	3/4"	PVC-COATED RGS	EXHAUST FAN (MCC ROOM)	MOTOR CONTROL CENTER "HW"	3-#12, #12 GND	
P-420	1"	PVC & PVC-COATED RGS	PRIMARY CLARIFIER DRIVE	MOTOR CONTROL CENTER "HW" – PRIM CLARIFIER DRIVE VFD	3-#10, #10 GND	
P-421	1"	PVC & PVC-COATED RGS	PRIMARY SLUDGE PUMP No. 1	MOTOR CONTROL CENTER "HW" – PRIM SLUDGE PUMP 1 VFD	3-#10, #10 GND AND 8#14	
P-422	1"	PVC & PVC-COATED RGS	PRIMARY SLUDGE PUMP No. 2	MOTOR CONTROL CENTER "HW" – PRIM SLUDGE PUMP 2 VFD	3-#10, #10 GND AND 8#14	
P-423	–	–	HARMONIC FILTER	MOTOR CONTROL CENTER "HW"	–	INTERNAL MCC WIRING WITH SIZE AS REQUIRED
P-424	–	–	–	MOTOR CONTROL CENTER "HW"	–	SPARE
P-430	2"	PVC-COATED RGS	FILTER FEED PUMP CONTROL PANEL	DISTRIBUTION PANEL H2	3-#1, #8 GND	
P-430A	1"	PVC-COATED RGS	FILTER FEED PUMP No. 1	FILTER FEED PUMP CONTROL PANEL	3-#8, #10 GND AND 2#14	
P-430B	1"	PVC-COATED RGS	FILTER FEED PUMP No. 2	FILTER FEED PUMP CONTROL PANEL	3-#8, #10 GND AND 2#14	
P-430C	1"	PVC-COATED RGS	FILTER FEED PUMP No. 3	FILTER FEED PUMP CONTROL PANEL	3-#8, #10 GND AND 2#14	
P-431	1"	PVC-COATED RGS	FILTER BACKWASH PUMP CONTROL PANEL	DISTRIBUTION PANEL H2	3-#6, #10 GND	
P-431A	3/4"	PVC-COATED RGS	FILTER 1 BACKWASH PUMP 1	FILTER BACKWASH PUMP CONTROL PANEL	3-#12, #12 GND	
P-431B	3/4"	PVC-COATED RGS	FILTER 1 BACKWASH PUMP 2	FILTER BACKWASH PUMP CONTROL PANEL	3-#12, #12 GND	
P-431C	3/4"	PVC-COATED RGS	FILTER 2 BACKWASH PUMP 1	FILTER BACKWASH PUMP CONTROL PANEL	3-#12, #12 GND	
P-431D	3/4"	PVC-COATED RGS	FILTER 2 BACKWASH PUMP 2	FILTER BACKWASH PUMP CONTROL PANEL	3-#12, #12 GND	
P-432	1"	PVC-COATED RGS	MOTORIZED WEIR GATE	DISTRIBUTION PANEL H2	3-#12, #12 GND	
H2-P-405	SEE NOTE					SEE ONE-LINE DIAGRAM (DETAIL A/E-2)
H2-P-406	SEE NOTE					SEE ONE-LINE DIAGRAM (DETAIL A/E-2)

POWER-CONDUIT AND CABLE SCHEDULE (A) (1)(2)

SCALE: NTS

SHEET NOTES:

(1) UNLESS OTHERWISE NOTE, FOR ALL CONDUITS UP TO AND INCLUDING P-424, EACH OF THE CONDUIT TAGS SHALL HAVE PREFIX "MCC-HW". FOR EXAMPLE, A COMPLETE CONDUIT TAG WILL BE "MCC-HW-P-400N".

(2) FOR ALL CONDUITS FROM P-430, P-431, AND P-432 EACH OF THE CONDUIT TAGS SHALL HAVE PREFIX "PANEL H2". FOR EXAMPLE, A COMPLETE CONDUIT TAG WILL BE "PANEL H2-P-430".

REGISTERED PROFESSIONAL ENGINEER DIEP TAN NGUYEN No. E17008 5/31/17 ELECTRICAL STATE OF CALIFORNIA

11/18/16

0" 1" VERIFY SCALES — BAR IS ONE INCH LONG ON FULL SIZE DRAWING. IF NOT ONE INCH LONG ON THIS DRAWING, ADJUST SCALES ACCORDINGLY

ENGINEERS, INC. Oakland, San Francisco, Orange County, Ca

RMC water and environment

REV	DATE	BY	APVD	DESCRIPTION
1				
2				
3				
4				
5				

DESIGNED	TP
DRAWN	LD
CHECKED	DN

SUBMITTED: MARK TAKEMOTO, RMC PROJECT ENGINEER CE-64369

APPROVED: STEVE CLARY, RMC ENGINEER CE-30318

SAUSALITO · MARIN CITY SANITARY DISTRICT

TREATMENT AND WET WEATHER FLOW UPGRADE

CABLE AND CONDUIT SCHEDULE
SHEET 1 OF 3

DWG NO	E-17
SHEET NO	183 OF 226
PROJ NO	055-006
DATE	NOVEMBER 2016

FILENAME: 286E_E17 11-18-16 08:42am LocDo | XREFS: | X-SMCSD-TBLK | MTakemoto-PE-stamp |<<--

Last Saved By: LocDo 11-11-16 09:31am

CONDUIT SCHEDULE (1)(2)

CONDUIT No.	CONDUIT SIZE	TYPE	FROM	TO	CABLES	NOTES
CC101	1"	PVC & PVC-COATED RGS	SPIRAL SCREEN CONTROL PANEL	PLC-HW	–	SPARE CONDUIT
CC102	1"	PVC & PVC-COATED RGS	SPIRAL SCREEN GATE No. 3	PLC-HW	4#14 AND 2#14 SPARES	
CC103	1"	PVC & PVC-COATED RGS	SPIRAL SCREEN GATE No. 6	PLC-HW	14#14 AND 2#14 SPARES	
CC104	1"	PVC & PVC-COATED RGS	EQUALIZATION GATE No. 3	PLC-HW	4#14 AND 2#14 SPARES	
CC105	1"	PVC & PVC-COATED RGS	EQUALIZATION PUMP No. 1 VFD	PLC-HW	14#14 AND 4#14 SPARES	
CC106	1"	PVC & PVC-COATED RGS	EQUALIZATION PUMP No. 2 VFD	PLC-HW	14#14 AND 4#14 SPARES	
CC107	1"	PVC & PVC-COATED RGS	GRIT WASHER CONTROL PANEL	PLC-HW	–	SPARE CONDUIT
CC108	1"	PVC & PVC-COATED RGS	EQUALIZATION PUMP 1 PLUG VALVE No. 1	PLC-HW	12#14 AND 2#14 SPARES	
CC109	1"	PVC & PVC-COATED RGS	EQUALIZATION PUMP 1 PLUG VALVE No. 2	PLC-HW	12#14 AND 2#14 SPARES	
CC110	1"	PVC & PVC-COATED RGS	EQUALIZATION PUMP 2 PLUG VALVE No. 1	PLC-HW	12#14 AND 2#14 SPARES	
CC111	1"	PVC & PVC-COATED RGS	EQUALIZATION PUMP 2 PLUG VALVE No. 2	PLC-HW	12#14 AND 2#14 SPARES	
CC112	1"	PVC & PVC-COATED RGS	EQUALIZATION PLUG VALVE No. 4	PLC-HW	12#14 AND 2#14 SPARES	
CC113	1"	PVC & PVC-COATED RGS	EQUALIZATION PLUG VALVE No. 5	PLC-HW	12#14 AND 2#14 SPARES	
CC114	1"	PVC & PVC-COATED RGS	PRIMARY CLARIFIER No. 2 CONTROL PANEL	PLC-HW	–	SPARE CONDUIT
CC115	1"	PVC & PVC-COATED RGS	PRIMARY CLARIFIER No. 2 CONTROL PANEL	PLC-HW	12#14 AND 2#14 SPARES	
CC116	1"	PVC & PVC-COATED RGS	PRIMARY SLUDGE PUMP 1 RVSS	PLC-HW	12#14	
CC117	1"	PVC & PVC-COATED RGS	PRIMARY SLUDGE PUMP 2 RVSS	PLC-HW	12#14	
CC118	1"	PVC & PVC-COATED RGS	MOTOR CONTROL CENTER "HW"	PLC-HW		
CC119	1"	PVC & PVC-COATED RGS	GRIT SYSTEM #3W SOLENOID VALVE	PLC-HW	2#12, #12 GND	
CC120	1"	PVC & PVC-COATED RGS	GRIT PUMP No. 1 CHECK VALVE	PLC-HW	12#14	
CC121	1"	PVC & PVC-COATED RGS	GRIT PUMP No. 2 CHECK VALVE	PLC-HW	12#14	
CC122	1"	PVC & PVC-COATED RGS	EQ. BASIN 1 #3W SOLENOID VALVE	PLC-HW	2#12, #12 GND	
CC123	1"	PVC & PVC-COATED RGS	EQ. BASIN 2 #3W SOLENOID VALVE	PLC-HW	2#12, #12 GND	
CC124	1"	PVC & PVC-COATED RGS	EQ. BASIN 1 WATER SOLENOID VALVE	PLC-HW	2#12, #12 GND	
CC125	1"	PVC & PVC-COATED RGS	EQ. BASIN 2 WATER SOLENOID VALVE 1	PLC-HW	2#12, #12 GND	
CC126	1"	PVC & PVC-COATED RGS	EQ. BASIN 2 WATER SOLENOID VALVE 2	PLC-HW	2#12, #12 GND	
CC127	1"	PVC & PVC-COATED RGS	EQ. BASIN 1 FLOAT SWITCH	PLC-HW	2#14	
CC128	1"	PVC & PVC-COATED RGS	EQ. BASIN 2 FLOAT SWITCH	PLC-HW	2#14	
CC129	1"	PVC & PVC-COATED RGS	SCUM PIT FLOAT SWITCH	PLC-HW	2#14	
CC130	1"	PVC & PVC-COATED RGS	FERRIC CHLORIDE DRAIN SUMP FLOAT	PLC-HW	2#14	
CC131	1"	PVC & PVC-COATED RGS	FERRIC CHLORIDE PUMP CONTROL PANEL	PLC-HW	10#14 AND 4#14 SPARES	
CC132	1"	PVC & PVC-COATED RGS	FERRIC CHLORIDE EMERGENCY EYEWASH ALARM PANEL	PLC-HW	4#14 AND 4#14 SPARES	
CC133	1"	PVC & PVC-COATED RGS	TURNTABLE CONTROL PANEL	PLC-HW	4#14	
CC134	1"	PVC & PVC-COATED RGS	DIESEL FUEL TANK LEAK DETECTION	PLC-HW	2#14 AND 4#14 SPARES	
CC135	1"	PVC & PVC-COATED RGS	FUEL TANK EMERGENCY EYEWASH ALARM PANEL	PLC-HW	2#14 AND 4#14 SPARES	
CC136	1"	PVC & PVC-COATED RGS	EQUALIZATION GATE 1	PLC-HW	4#14 AND 2#14 SPARES	
CC137	1"	PVC & PVC-COATED RGS	EQUALIZATION GATE 2	PLC-HW	4#14 AND 2#14 SPARES	
CC138	1"	PVC & PVC-COATED RGS	EQ. BASIN 2 TIPPING TROUGHS CONTACT SWITCHES	PLC-HW	6#14 AND 4#14 SPARES	
CC139	3/4"	PVC-COATED RGS	FIRE ALARM CONTROL PANEL	PLC-HW	4#14	
CC201	1.5"	PVC-COATED RGS	FILTER FEED PUMP CONTROL PANEL	PLC-GEN	30#14 AND 6#14 SPARES	
CC202	3/4"	PVC-COATED RGS	FILTER FEED LOW LOW LEVEL FLOAT SWITCH	PLC-GEN	4#14	
CC203	3/4"	PVC-COATED RGS	FILTER FEED HIGH HIGH LEVEL FLOAT SWITCH	PLC-GEN	4#14	
CC204A	3/4"	PVC-COATED RGS	FILTER 1 CONTROL PANEL	PLC-GEN	–	SPARE CONDUIT
CC204B	3/4"	PVC-COATED RGS	FILTER 2 CONTROL PANEL	PLC-GEN	–	SPARE CONDUIT
CC205	3/4"	PVC-COATED RGS	FILTER INFLUENT MOTORIZED WEIR GATE	PLC-GEN	4#14	
CC206	3/4"	PVC-COATED RGS	FILTER FEED PUMP HEADER MOV	PLC-GEN	4#14	
CC301	3/4"	RGS	RECYCLE WATER PUMP 1 VFD	PLC-6	14#14 (4 SPARES)	
CC302	3/4"	RGS	RECYCLE WATER PUMP 2 VFD	PLC-6	14#14 (4 SPARES)	
CC401	1 1/2"	PVC-COATED RGS	UTILITY WATER PUMP CONTROL PANEL	MAIN PLANT PLC	30#14 AND 6#14 SPARES	

CONTROL-CONDUIT AND CABLE SCHEDULE (A) (1)(2)

SCALE: NTS

SHEET NOTES:

(1) FOR ALL CONDUITS UP TO AND INCLUDING CC421, EACH OF THE CONDUIT TAGS SHALL HAVE PREFIX "CP-HW". FOR EXAMPLE, A COMPLETE CONDUIT TAG WILL BE "CP-HW-CC105".

(2) FOR ALL CONDUITS WITH 200 SERIES, EACH OF THE CONDUIT TAGS SHALL HAVE PREFIX "CP-GEN". FOR EXAMPLE, A COMPLETE CONDUIT TAG WILL BE "CP-GEN-CC202".

REGISTERED PROFESSIONAL ENGINEER — STEPHEN TAN NGUYEN — No. E17008 — 8/30/17 — ELECTRICAL — STATE OF CALIFORNIA

11/18/16

0" 1" — VERIFY SCALES — BAR IS ONE INCH LONG ON FULL SIZE DRAWING. IF NOT ONE INCH LONG ON THIS DRAWING, ADJUST SCALES ACCORDINGLY

ENGINEERS, INC. Oakland, San Francisco, Orange County, Ca

RMC water and environment

REV	DATE	BY	APVD	DESCRIPTION
1				
2				
3				
4				
5				

DESIGNED	TP
DRAWN	LD
CHECKED	DN

SUBMITTED: MARK TAKEMOTO, RMC PROJECT ENGINEER CE-64369

APPROVED: STEVE CLARY, RMC ENGINEER CE-30318

SAUSALITO · MARIN CITY SANITARY DISTRICT

TREATMENT AND WET WEATHER FLOW UPGRADE

CABLE AND CONDUIT SCHEDULE
SHEET 2 OF 3

DWG NO	E-18
SHEET NO	184 OF 226
PROJ NO	055-006
DATE	NOVEMBER 2016

FILENAME: 286F_E18 11-18-16 08:42am LocDo | XREFS| X-SMCSD-TBLK | MTakemoto-PE-stamp |<<--

Last Saved By: LocDo 11-11-16 09:33am

CONDUIT SCHEDULE ⟨1⟩⟨2⟩

CONDUIT No.	CONDUIT SIZE	TYPE	FROM	TO	CABLES	NOTES
I101	3/4"	PVC COATED RGS	MCC-HW POWER METER	PLC-HW	CAT6e	
I102	1"	PVC & PVC COATED RGS	SPIRAL SCREEN CONTROL PANEL	PLC-HW	CAT6e	
I103	1"	PVC & PVC COATED RGS	GRIT WASHER CONTROL PANEL	PLC-HW	CAT6e	
I104	1"		MCC ROOM EXTERIOR	PLC-HW	CAT6e	SPARE
I105	1"		MCC ROOM EXTERIOR	PLC-HW	CAT6e	SPARE
I106	1"	PVC & PVC COATED RGS	PARSHALL FLUME LEVEL TRANSMITTER 1	PLC-HW	1 PR	
I107	1"	PVC & PVC COATED RGS	PARSHALL FLUME LEVEL TRANSMITTER 2	PLC-HW	1 PR	
I108	1"	PVC & PVC COATED RGS	EQUALIZATION BASIN 1 LEVEL TRANSMITTER	PLC-HW	1 PR	
I109	1"	PVC & PVC COATED RGS	EQUALIZATION BASIN 2 LEVEL TRANSMITTER	PLC-HW	1 PR	
I110	1"	PVC & PVC COATED RGS	EQUALIZATION PUMPING FLOWMETER	PLC-HW	1 PR	
I111	1"	PVC & PVC COATED RGS	SCUM PIT BUBBLER TRANSMITTER	PLC-HW	1 PR	
I112	1"	PVC & PVC COATED RGS	SLUDGE/SCUM PUMP 1 FLOWMETER	PLC-HW	1 PR	
I113	1"	PVC & PVC COATED RGS	SLUDGE/SCUM PUMP 2 FLOWMETER	PLC-HW	1 PR	
I114	1"	PVC & PVC COATED RGS	FERRIC CHLORIDE TANK LEVEL TRANSMITTER	PLC-HW	1 PR	
I115	1"	PVC & PVC COATED RGS	FERRIC CHLORIDE PUMP CONTROL PANEL	PLC-HW	2 PRS	
I116	1"	PVC & PVC COATED RGS	DIESEL FUEL TANK CONTROL PANEL	PLC-HW	1 PR AND 6#14	
I117	1"	PVC & PVC COATED RGS	AUTOMATIC REFRIGERATED SAMPLER	PLC-HW	1 PR AND 2#14	
I118	1"	PVC & PVC COATED RGS	EQUALIZATION GATE 3	PLC-HW	2 PRS	
I119	1"	PVC & PVC COATED RGS	SPIRAL SCREEN GATE 3	PLC-HW	2 PRS	
I201	1"	PVC COATED RGS	FILTER FEED PUMP CONTROL PANEL	PLC-GEN	6 PRS AND 2 PRS SPARES	
I202A	1"	PVC COATED RGS	FILTER 1 CONTROL PANEL	PLC-GEN	CAT6e	
I202B	1"	PVC COATED RGS	FILTER 2 CONTROL PANEL	PLC-GEN	CAT6e	
I203	3/4"	PVC COATED RGS	FILTER FEED LEVEL TRANSMITTER	PLC-GEN	1 PR	
I204	3/4"	PVC COATED RGS	FILTER FEED FLOWMETER	PLC-GEN	1 PR	
I205	3/4"	PVC-COATED RGS	FILTER INFLUENT MOTORIZED WEIR GATE	PLC-GEN	2 PRS	
I206	3/4"	PVC-COATED RGS	FILTER FEED PUMP HEADER MOV	PLC-GEN	2 PRS	
I301	3/4"	RGS	RECYCLE PUMP 1 VFD	PLC-6	2 PRS	
I302	3/4"	RGS	RECYCLE PUMP 2 VFD	PLC-6	2 PRS	
I401	1"	PVC COATED RGS	UTILITY WATER PUMP CONTROL PANEL	MAIN PLANT PLC	6 PRS AND 2 PRS SPARES	
I402	3/4"	PVC COATED RGS	UTILITY WATER PRESSURE TRANSMITTER	MAIN PLANT PLC	1 PR	

SHEET NOTES:

⟨1⟩ FOR ALL CONDUITS UP TO AND INCLUDING I120, EACH OF THE CONDUIT TAGS SHALL HAVE PREFIX "CP-HW". FOR EXAMPLE, A COMPLETE CONDUIT TAG WILL BE "CP-HW-I108".

⟨2⟩ FOR ALL CONDUITS WITH 200 SERIES, EACH OF THE CONDUIT TAGS SHALL HAVE PREFIX "CP-GEN". FOR EXAMPLE, A COMPLETE CONDUIT TAG WILL BE "CP GEN-I202".

INSTRUMENT-CONDUIT AND CABLE SCHEDULE (A) ⟨1⟩⟨2⟩

SCALE: NTS

FILENAME: 286F_E19 11-18-16 08:42am LocDo || XREFS: X-SMCSD-TBLK | MTakemoto-PE-stamp |<<--

Last Saved By: LocDo 11-11-16 09:33am

REGISTERED PROFESSIONAL ENGINEER DIEP TAN NGUYEN ELECTRICAL STATE OF CALIFORNIA 11/18/16

0" 1" — VERIFY SCALES — BAR IS ONE INCH LONG ON FULL SIZE DRAWING. IF NOT ONE INCH LONG ON THIS DRAWING, ADJUST SCALES ACCORDINGLY

ENGINEERS, INC. Oakland, San Francisco, Orange County, Ca

RMC water and environment

REV	DATE	BY	APVD	DESCRIPTION

DESIGNED	TP
DRAWN	LD
CHECKED	DN

SUBMITTED: MARK TAKEMOTO, RMC PROJECT ENGINEER CE-64369

APPROVED: STEVE CLARY, RMC ENGINEER CE-30318

SAUSALITO · MARIN CITY SANITARY DISTRICT

TREATMENT AND WET WEATHER FLOW UPGRADE

CABLE AND CONDUIT SCHEDULE
SHEET 3 OF 3

DWG NO	E-19
SHEET NO	185 OF 226
PROJ NO	055-006
DATE	NOVEMBER 2016

LIGHT FIXTURE SCHEDULE

FIXTURE DESIGNATION	TYPE	QTY	VOLT	DESCRIPTION	MANUFACTURER	CAT. No.	LAMPS	MOUNTING
A / 157	LED 157W	AS SHOWN	120V	POLE MOUNTED, AREA LIGHT FIXTURE, LED TYPE WITH DIE CAST ALUMINUM HOUSING AND 10" ARM ON 12' SQUARE POLE.	MCGRAW EDISON LITHONIA	GLEON-AE-03-LED-E1-T1-BZ EQUIVALENT	LED	POLE MOUNTED
A1 / 2/157	LED 157W	AS SHOWN	120V	POLE MOUNTED, AREA LIGHT FIXTURE, LED TYPE WITH DIE CAST ALUMINUM HOUSING AND 10" ARM ON 12' SQUARE POLE WITH TWO HEADS.	MCGRAW EDISON LITHONIA	GLEON-AE-03-LED-E1-T1-BZ EQUIVALENT	LED	POLE MOUNTED
B / 54	LED 54W	AS SHOWN	120V	WALL MOUNTED, HEAVY DUTY, DIE CAST ALUMINUM HOUSING, LED TYPE, QUARTER SPHERE WITH DOWN LIGHT.	MCGRAW EDISON LITHONIA	ISS-B02-LED-E1-BL2-BZ EQUIVALENT	LED	WALL MOUNTED
C / 54	LED 54W	AS SHOWN	120V	CEILING MOUNTED, WRAP AROUND, LED TYPE LIGHT FIXTURE 48" LONG, 12" WIDE WITH ACRYLIC.	LITHONIA MCGRAW EDISON	FHE-LED-12L-MVOLT EQUIVALENT	LED	CEILING MOUNTED
D / 2/25	EMERGENCY BATTERY PACK	AS SHOWN	120V	BATTERY PACK WITH NICAD BATTERY, CHARGER, TWO 25W SEALED BEAM HEADS ADJUSTABLE 12VDC WITH INDICATOR AND TEST PUSH BUTTON.	HOLOPHANE SIMKAR	DM6-N-50-7-NS-2-NA SHDEM-2-25W-12	SEALED BEAM TUNGSTEN	WALL/ SURFACE
E / 150	LED 150W	AS SHOWN	120V	POLE MOUNTED, AREA LIGHT FIXTURE, LED TYPE WITH DIE CAST ALUMINUM HOUSING AND 10" ARM ON 10' SQUARE POLE, EXPLOSION PROOF.	CROUSE-HINDS MCGRAW EDISON/LITHONIA	LPL06-C60-150W-LED EQUIVALENT	LED	POLE MOUNTED
F / 7	LED 7W	AS SHOWN	120V	RECESSED MOUNTED, LANDSCAPE TYPE LED WATER PROOF, BLACK FINISHED WITH DOWN LIGHT LOUVER.	BRILLRAYDO EQUIVALENT	TP-OU-03-40W7 EQUIVALENT	LED	RECESSED
G / 12.5	LED 12.5W	AS SHOWN	120V	CAST ALUMINUM, STEM-MOUNTED, ADJUSTABLE LED, BRONZE, LANDSCAPE TYPE FIXTURE 4250K WITH FROSTED LENS AND 6" STEM.	KICHLER EQUIVALENT	16201 EQUIVALENT	LED	STEM

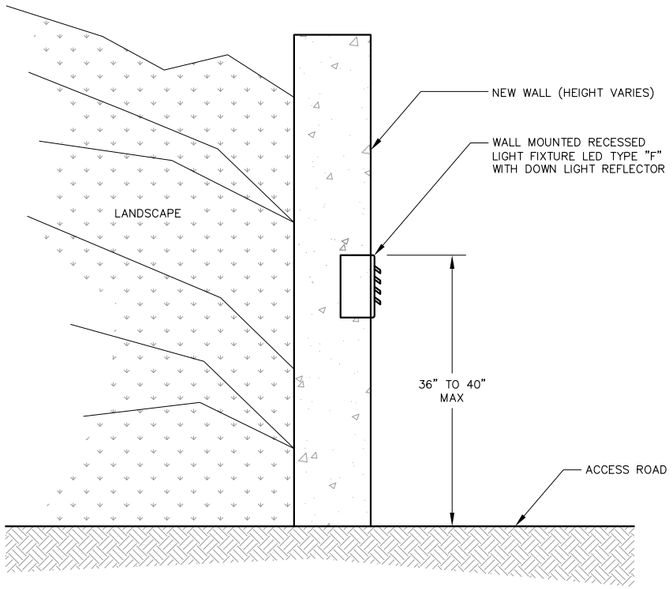

E594A TYP **CROSS SECTION DETAIL**
SCALE: NTS

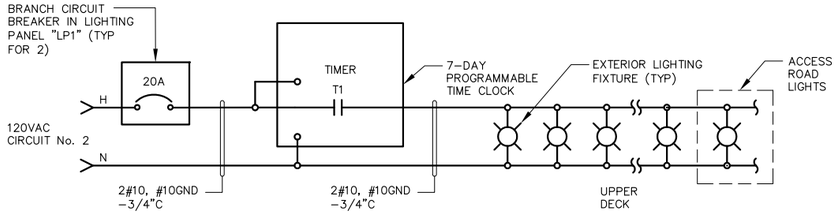

NOTES:

1. TIMERS ARE LOCATED IN MCC-HW.
2. TIMER'S CONTACT SHALL BE 30A 240V RATED FOR SWITCHING LIGHTING LOADS.

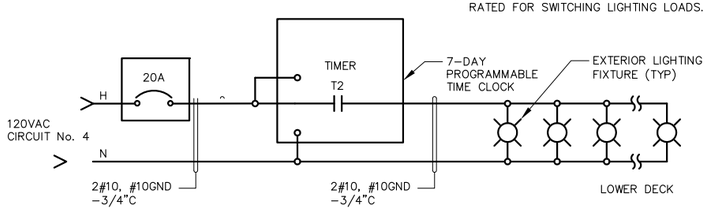

EXTERIOR LIGHTING

LIGHTING CONTROL B
SCALE: NTS

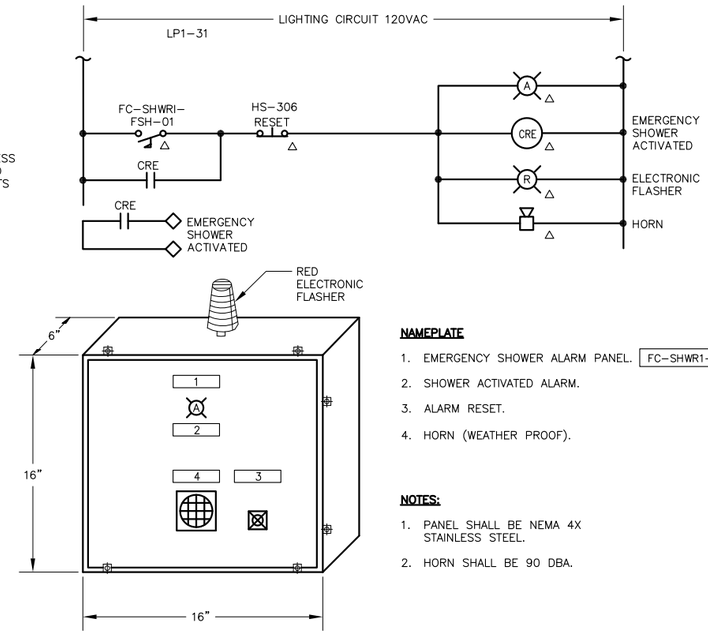

NAMEPLATE

1. EMERGENCY SHOWER ALARM PANEL. FC-SHWR1-LCP-01
2. SHOWER ACTIVATED ALARM.
3. ALARM RESET.
4. HORN (WEATHER PROOF).

NOTES:

1. PANEL SHALL BE NEMA 4X STAINLESS STEEL.
2. HORN SHALL BE 90 DBA.

EMERGENCY EYEWASH SHOWER CONTROL SCHEMATIC C
SCALE: NTS

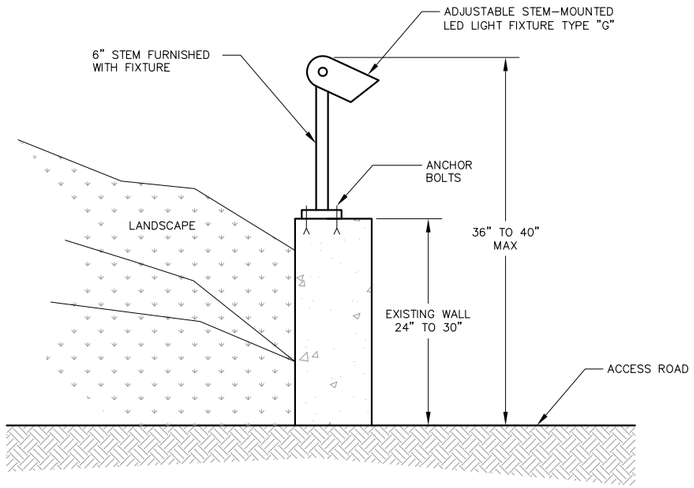

E594B TYP **CROSS SECTION DETAIL**
SCALE: NTS

REGISTERED PROFESSIONAL ENGINEER — DIEP TAN NGUYEN — No. E17008 — 6/30/17 — ELECTRICAL — STATE OF CALIFORNIA
11/18/16

0" 1" — VERIFY SCALES — BAR IS ONE INCH LONG ON FULL SIZE DRAWING. IF NOT ONE INCH LONG ON THIS DRAWING, ADJUST SCALES ACCORDINGLY

ENGINEERS, INC. Oakland, San Francisco, Orange County, Ca.

RMC water and environment

REV	DATE	BY	APVD	DESCRIPTION
1				
2				
3				
4				
5				

DESIGNED	TP
DRAWN	LD
CHECKED	DN

SUBMITTED: MARK TAKEMOTO, RMC PROJECT ENGINEER CE-64369
APPROVED: STEVE CLARY, RMC ENGINEER CE-30318

SAUSALITO · MARIN CITY SANITARY DISTRICT

TREATMENT AND WET WEATHER FLOW UPGRADE

LIGHTING FIXTURE SCHEDULE
LIGHTING CONTROL AND EYEWASH CONTROL PANEL

DWG NO	E-20
SHEET NO	186 OF 226
PROJ NO	055-006
DATE	NOVEMBER 2016

FILENAME: 286F_E20 11-18-16 08:42am LocDo || XREFs: | X-SMCSD-TBLK | MTakemoto-PE-stamp |<<--

Last Saved By: LocDo 11-11-16 10:10am

TYPICAL SEQUENCE OF OPERATION INPUT	OUTPUT						
	DISPLAY GENERAL ALARM SIGNAL AT FACP	INDICATE AREA AT FACP	DISPLAY SUPERVISORY SIGNAL AT FACP	ACTIVATE NOTIFICATION APPLIANCE SIGNALS	NOTIFY UL APPROVED MONITORING STATION ON ALARM CONDITION	NOTIFY UL APPROVED MONITORING STATION ON TROUBLE CONDITION	DISPLAY TROUBLE SIGNAL AT FACP
PULL STATION	✓	✓		✓	✓		
SMOKE DETECTOR	✓	✓		✓	✓		
POWER FAILURE			✓			✓	✓
OPEN CIRCUIT, GROUND FAULT OR SHORT CIRCUIT			✓			✓	✓
LOW BATTERY VOLTAGE			✓			✓	✓
PULL STATION							
PULL STATION							

FIRE ALARM SYSTEM FUNCTIONS (A)

SCALE: NTS

SHEET NOTES:

(1) THIS FIRE ALARM CONTROL PANEL SHALL BE ADDRESSABLE TYPE SYSTEM WITH MAIN CONTROL PANEL AND ACCESSORIES APPROVED AND LISTED BY CALIFORNIA STATE FIRE MARSHAL. SEE DIV 16 SPECS FOR DETAILED REQUIREMENTS.

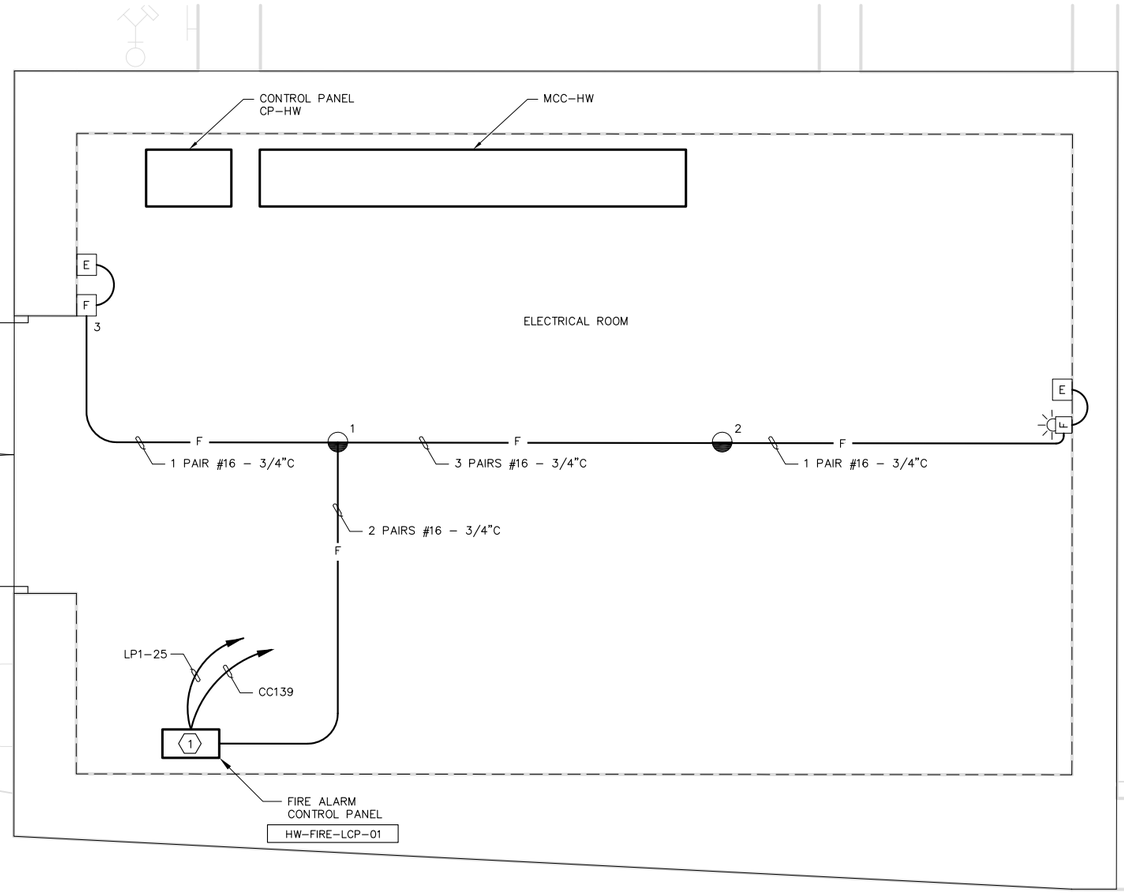

ELECTRICAL ROOM–FIRE ALARM PLAN (B)

SCALE: 3/8"=1'–0'

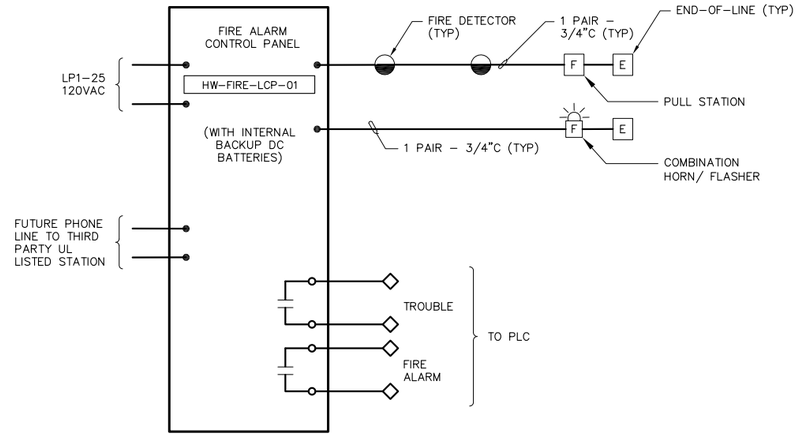

FIRE ALARM RISER DIAGRAM (C)

SCALE: NTS

REGISTERED PROFESSIONAL ENGINEER
DIEP TAN NGUYEN
No. E18017
ELECTRICAL
STATE OF CALIFORNIA
11/18/16

0" 1" — VERIFY SCALES — BAR IS ONE INCH LONG ON FULL SIZE DRAWING. IF NOT ONE INCH LONG ON THIS DRAWING, ADJUST SCALES ACCORDINGLY

ENGINEERS, INC. Oakland, San Francisco, Orange County, Ca.

RMC water and environment

REV	DATE	BY	APVD	DESCRIPTION
1				
2				
3				
4				
5				

DESIGNED	TP
DRAWN	LD
CHECKED	DN

SUBMITTED: MARK TAKEMOTO
RMC PROJECT ENGINEER CE-64369

APPROVED: STEVE CLARY
RMC ENGINEER CE-30318

SAUSALITO • MARIN CITY SANITARY DISTRICT

TREATMENT AND WET WEATHER FLOW UPGRADE

FIRE ALARM
ELECTRICAL ROOM

DWG NO	E21
SHEET NO	187 OF 226
PROJ NO	055-006
DATE	NOVEMBER 2016

FILENAME: 286F_E21 11-18-16 08:42am LocDo || XREFS: X-SMCSD-TBLK | MTakemoto-PE-stamp |<<--

Last Saved By: LocDo 11-11-16 09:35am

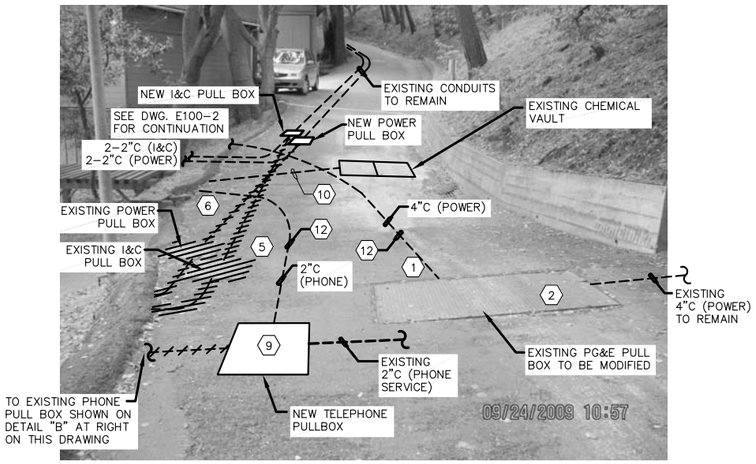

ACCESS ROAD AND PULL BOXES (A) (11)

SCALE: NTS



PHONE PULL BOX (B)

SCALE: NTS

SHEET NOTES:

1. COREDRILL THIS EXISTING WALL OF THE EXISTING PULLBOX TO ACCOMMODATE INSTALLATION OF A NEW 4" CONDUIT AS A NEW ROUTE TO NEW SERVICE TRANSFORMER PAD AS PER DETAIL B/E-24.

   THERE ARE KNOWN EXISTING UTILITY PIPING AS WELL AS UNDERGROUND CONDUITS LOCATED WITHIN THIS AREA. FIELD VERIFICATION OF EXISTING UNDERGROUND UTILITIES ARE REQUIRED TO AVOID DAMAGE TO THEM. HAND DIG AS REQUIRED.

2. FURNISH AND INSTALL ONE DRAIN LINE AT BOTTOM OF THIS EXISTING PULL BOX AS PER NOTE 15 ON DRAWING E100-2.

3. THIS EXISTING SERVICE TRANSFORMER SHALL BE KEPT FUNCTIONAL UNTIL ALL NEW CONDUIT AND ACCESSORIES SUCH AS PULL BOXES ARE INSTALLED AND READY FOR SWITCH-OVER OPERATION.

   THE EXISTING PRIMARY FEEDER TO THIS TRANSFORMER WAS BOTTOM FED FROM THE UNDERSIDE OF THE EXISTING CONCRETE SLAB/FLOOR. THIS CONDUIT WILL BE ABANDONED IN PLACE. PLUG CONDUITS WITH CAPS.

4. THIS EXISTING METERING AND MAIN SERVICE SWITCHBOARD SHALL BE KEPT FUNCTIONAL AT ALL TIMES EXCEPT DURING SCHEDULED SHUT DOWN FOR SWITCH-OVER. REFER TO SPECIFICATIONS (DIV 16) FOR STANDBY POWER REQUIREMENTS DURING SWITCH-OVER OPERATIONS.

5. THESE EXISTING PULL BOXES AND EXISTING UNDERGROUND CONDUITS SHOWN SHALL REMAIN. CARE SHALL BE TAKEN TO AVOID DAMAGE TO THEM DURING EXCAVATION AND/OR TRENCHING IN THIS AREA.

6. SEE DETAIL "C" ON THIS DRAWING FOR CONDUIT EXITING ACCESS ROAD AND BEGINNING TO BE ROUTED EXPOSED ALONG EXISTING PIPE SUPPORTS PER DETAIL "D" ALSO SHOWN ON THIS DRAWING.

7. CORE DRILL EXISTING WALL AS REQUIRED FOR CONDUIT PENETRATION AS SHOWN. FURNISH AND INSTALL CONDUIT SUPPORTS FOR THE 2" (TELEPHONE) CONDUIT. THIS EXPOSED CONDUIT SHALL BE PVC COATED RIGID GALVANIZED STEEL.

8. THE 2" (TELEPHONE) CONDUIT SHALL BE INSTALLED ON THE EXISTING CONCRETE PIER SUPPORTS AS SHOWN.

9. INTERCEPT EXISTING 2" TELEPHONE SERVICE CONDUIT AT THIS LOCATION. FURNISH AND INSTALL NEW H20 RATED PULL BOX WITH NEW CONDUIT TO PROVIDE ALTERNATE ROUTE TO THE EXISTING PHONE CABINET AS SHOWN. DEPTH OF THE NEW PULL BOX SHALL BE AS REQUIRED (APPROXIMATELY 36" TO 48").

10. EXISTING BURIED CHEMICAL PIPING SHALL BE PROTECTED DURING EXCAVATION TO AVOID DAMAGE.

11. THE ENTIRE LENGTH OF THE TREATMENT PLANT'S ACCESS ROAD SHALL REMAIN ACCESSIBLE OUTSIDE OF CONSTRUCTION HOURS. DURING CONSTRUCTION, TRENCH PLATES SHALL BE AVAILABLE TO MINIMIZE TIME ACCESS IS RESTRICTED TO DISTRICT OPERATORS. ALL WORK PLANS RESULTING IN RESTRICTED ACCESS, OR ACCESS DELAYS, SHALL BE SUBMITTED TO THE DISTRICT IN ADVANCE AND SHALL INCLUDE A SCHEDULE AND TIMELINE FOR APPROVAL. THIS ACCESS ROAD SUPPORTS SOLIDS PROCESSING AND EMERGENCY PLANT ACCESS.

12. THE NEW 1-4" CONDUIT AND 2" CONDUIT SHALL BE ROUTED BELOW EXISTING CONCRETE ENCASEMENT OF EXISTING CONDUIT DUCTBANK AT APPROXIMATELY 48" BELOW GRADE TO AVOID CONFLICTS.

13. THIS STAIR AND EXPOSED CONDUITS SHALL BE DEMOLISHED AND REMOVED.

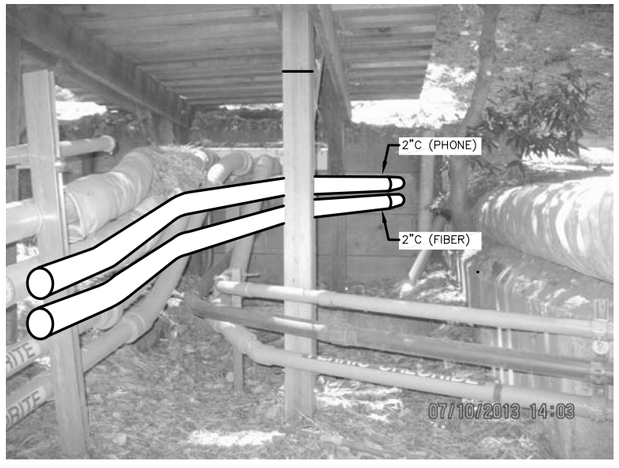

EXPOSED CONDUIT LOCATION (C) (7)

SCALE: NTS



CONDUIT SUPPORT (D) (8)

SCALE: NTS

EXISTING PG&E SERVICE TRANSFORMER TO BE RELOCATED BY PG&E. FILL SLAB PENETRATION WITH CONCRETE.

EXISTING MAIN SERVICE SWITCHBOARD TO REMAIN. DISCONNECT AND REMOVE EXISTING UNDERGROUND FEEDER CABLES AND CONNECT NEW CABLES AS PER SINGLE-LINE DIAGRAM ON DRAWING E-2.

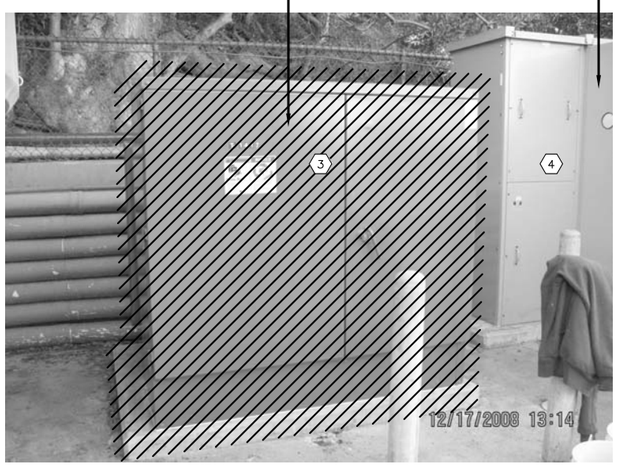

EXISTING PG&E SERVICE TRANSFORMER (E)

SCALE: NTS

REGISTERED PROFESSIONAL ENGINEER — DIEP TAN NGUYEN — No. E17668 — 6/30/17 — ELECTRICAL — STATE OF CALIFORNIA

11/18/16

0" 1" — VERIFY SCALES — BAR IS ONE INCH LONG ON FULL SIZE DRAWING. IF NOT ONE INCH LONG ON THIS DRAWING, ADJUST SCALES ACCORDINGLY

ENGINEERS, INC. Oakland, San Francisco, Orange County, Ca

RMC water and environment

REV	DATE	BY	APVD	DESCRIPTION
1				
2				
3				
4				
5				

DESIGNED	TP
DRAWN	LD
CHECKED	DN

SUBMITTED: MARK TAKEMOTO, RMC PROJECT ENGINEER CE-64369

APPROVED: STEVE CLARY, RMC ENGINEER CE-30318

SAUSALITO · MARIN CITY SANITARY DISTRICT

TREATMENT AND WET WEATHER FLOW UPGRADE

CONSTRUCTION DETAILS
SHEET 1 OF 3

DWG NO	E-22
SHEET NO	188 OF 226
PROJ NO	055-006
DATE	NOVEMBER 2016

FILENAME: 286F_E22 11-18-16 08:42am LocDo ‖ XREFs:‖ X-SMCSD-TBLK | MTakemoto-PE-stamp |<<--

Last Saved By: LocDo 11-11-16 09:35am

SHEET NOTES:

1. THIS EXISTING MAIN SERVICE TELEPHONE CABINET SHALL REMAIN FUNCTIONAL UNTIL ALL CONDUITS OF THE ALTERNATE ROUTES HAVE BEEN INSTALLED AND READY FOR SWITCHOVER. AFTER SWITCHOVER, THE BOTTOM FED CONDUIT EMBEDDED IN CONCRETE SHALL BE ABANDONED IN PLACE.
2. SEE DETAIL "B" ON DRAWING E-26 FOR TEMPORARY POWER CONNECTION TO THIS EXISTING ATS DURING SWITCH OVER.
3. SEE NOTE 3 ON DRAWING E-2 FOR REQUIRED WORK IN THIS PANEL.
4. THIS EXISTING PLC SHALL BE REMOVED AND REPLACED WITH A NEW PANEL WITH NEW COMPONENTS. SEE DRAWINGS E-15A AND E-15B FOR ADDITIONAL DETAILS.

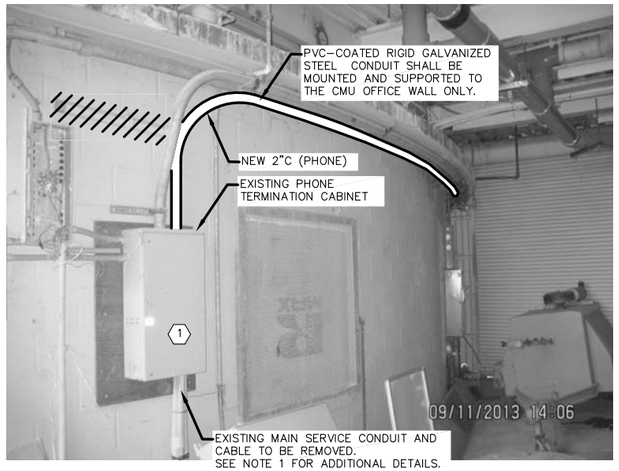

PHONE SERVICE CONDUIT DETAIL (A)
SCALE: NTS

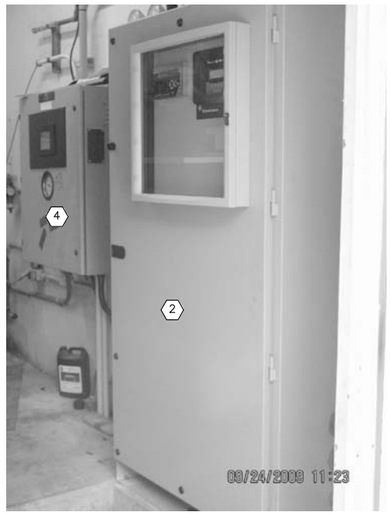

EXISTING ATS AND PLC-GEN (B)
SCALE: NTS



EXISTING
POWER PANEL H-2 (C)
SCALE: NTS

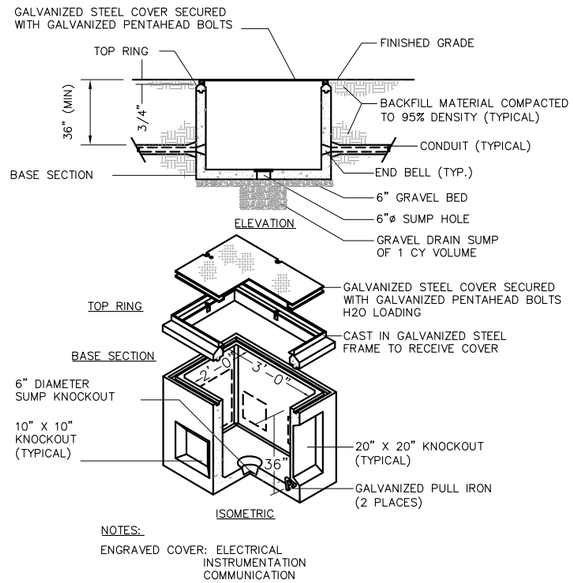

E706A / TYP PHONE CONCRETE PULLBOX
SCALE: NTS

FILENAME: 286F_E23 11-18-16 08:42am LocDo || XREFS: | X-SMCSD-TBLK | MTakemoto-PE-stamp |<<--
Last Saved By: LocDo 11-11-16 09:36am

REGISTERED PROFESSIONAL ENGINEER — DIEP TAN NGUYEN — No. E17008 — 6/30/17 — ELECTRICAL — STATE OF CALIFORNIA
11/18/16

0" 1" — VERIFY SCALES — BAR IS ONE INCH LONG ON FULL SIZE DRAWING. IF NOT ONE INCH LONG ON THIS DRAWING, ADJUST SCALES ACCORDINGLY

ENGINEERS, INC. Oakland, San Francisco, Orange County, Ca.

RMC water and environment

REV	DATE	BY	APVD	DESCRIPTION
1				
2				
3				
4				
5				

DESIGNED TP
DRAWN LD
CHECKED DN

SUBMITTED: MARK TAKEMOTO, RMC PROJECT ENGINEER CE-64369
APPROVED: STEVE CLARY, RMC ENGINEER CE-30318

SAUSALITO · MARIN CITY SANITARY DISTRICT

TREATMENT AND WET WEATHER FLOW UPGRADE

CONSTRUCTION DETAILS
SHEET 2 OF 3

DWG NO E-23
SHEET NO 189 OF 226
PROJ NO 055-006
DATE NOVEMBER 2016

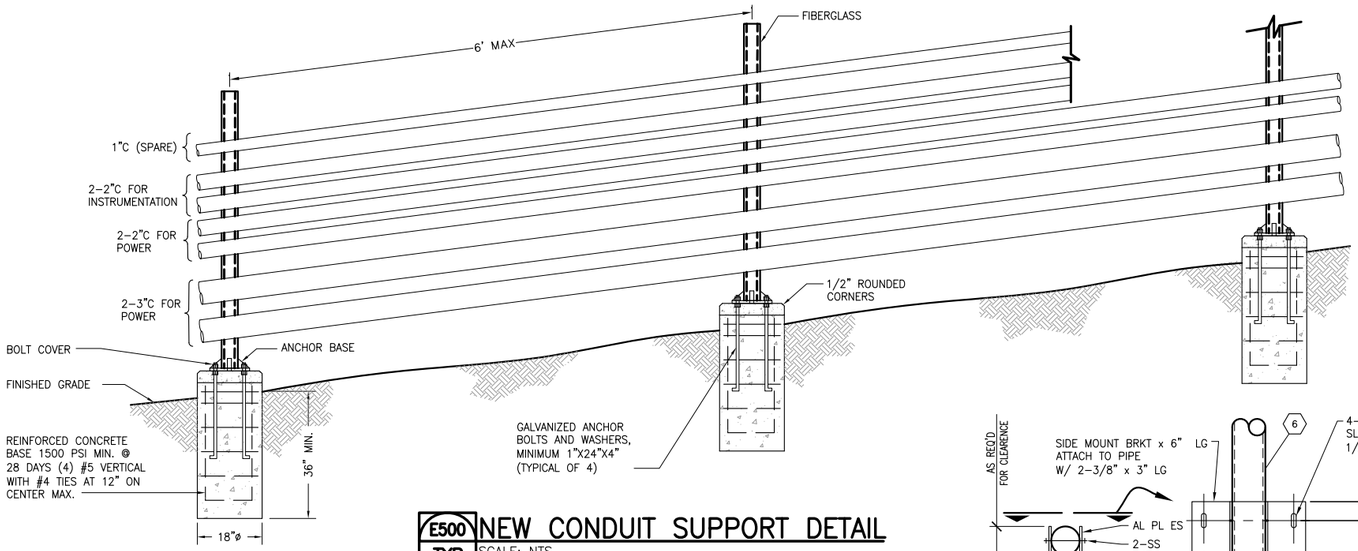

E500 TYP NEW CONDUIT SUPPORT DETAIL
SCALE: NTS

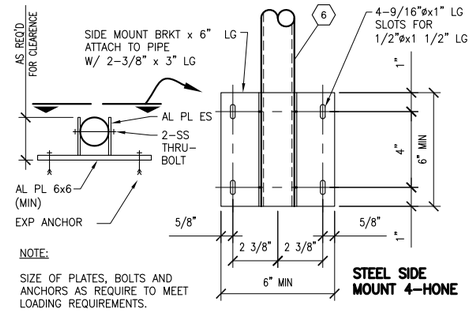

NOTE:
SIZE OF PLATES, BOLTS AND ANCHORS AS REQUIRE TO MEET LOADING REQUIREMENTS.

STEEL SIDE MOUNT 4-HONE

E562 TYP SIDE-MOUNTED GUARD RAIL DETAIL
SCALE: NTS

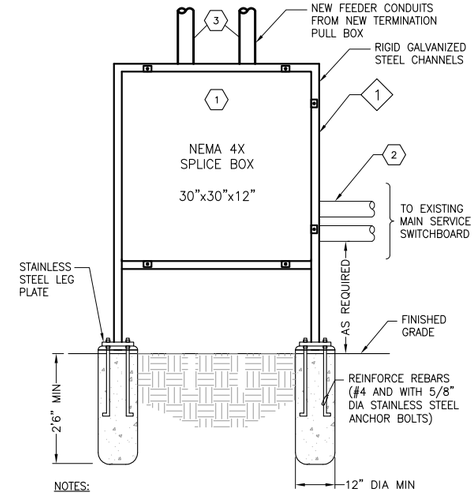

NOTES:

1. CONTRACTOR SHALL PROVIDE AND FABRICATE THE ENTIRE SUPPORT INCLUDING FOUNDATION WHERE SHOWN, PULL BOX, NUTS, BOLTS AND OTHER ASSOCIATED EQUIPMENT.

E362 TYP PULL BOX SUPPORT DETAIL
SCALE: NTS

SHEET NOTES:

1. THIS NEMA 4X (316 SS) PULL BOX SHALL BE LOCATED BEHIND THE FENCE WHICH SHALL BE MODIFIED AND CUT TO PROVIDE FRONT ACCESS. SEE ELECTRICAL SITE PLAN FOR EXACT LOCATION.
2. THESE TWO POWER CONDUITS ROUTED ABOVE EXISTING 2-3"C. SEE DETAIL "C" ON THIS DRAWING.
3. THESE TWO CONDUITS ARE FROM NEW TERMINATION PULL BOX, CIRCUIT MS-P-400. SEE SINGLE-LINE DIAGRAM ON DRAWING E-2. PROVIDE REQUIRED SUPPORTS.
4. SEE STRUCTURAL DRAWINGS FOR CONCRETE SLAB DETAIL AND REMOVABLE GUARDRAIL DETAIL. A MINIMUM 3' CLEAR DISTANCE FROM THE GUARDRAIL TO THE FRONT OF THE SWITCHBOARD IS REQUIRED.
5. OUTGOING CONDUITS SHALL BE LOCATED AT THIS ELEVATION AS SHOWN. SUPPORT CONDUITS PROPERLY WITH UNISTRUT CHANNELS FASTENED TO NEW CONCRETE WALL AS REQUIRED.
6. GUARD RAIL SHALL BE MADE OF ALUMINUM, AND SHALL BE 3'-6" WITH TWO PARALLEL HORIZONTAL RUNGS AND WITH MAX 5' SPACING BETWEEN POSTS. RAILING AND POSTS SHALL BE 1.5" SCHEDULE 40 ALUMINUM PIPE ALLOY 6105-T5, ASTM-B-429. THEY SHALL BE DESIGNED TO WITHSTAND A 200 LB CONCENTRATED LOAD APPLIED IN ANY DIRECTION AND AT ANY POINT ON THE TOP RAIL. ACCESSORIES SUCH AS CONCRETE ANCHORS SHALL BE SS TYPE 304 WEDGE ANCHORS.
7. SEE NOTE 8 ON DRAWING E-2 FOR REQUIREMENTS FOR THIS PULL BOX.

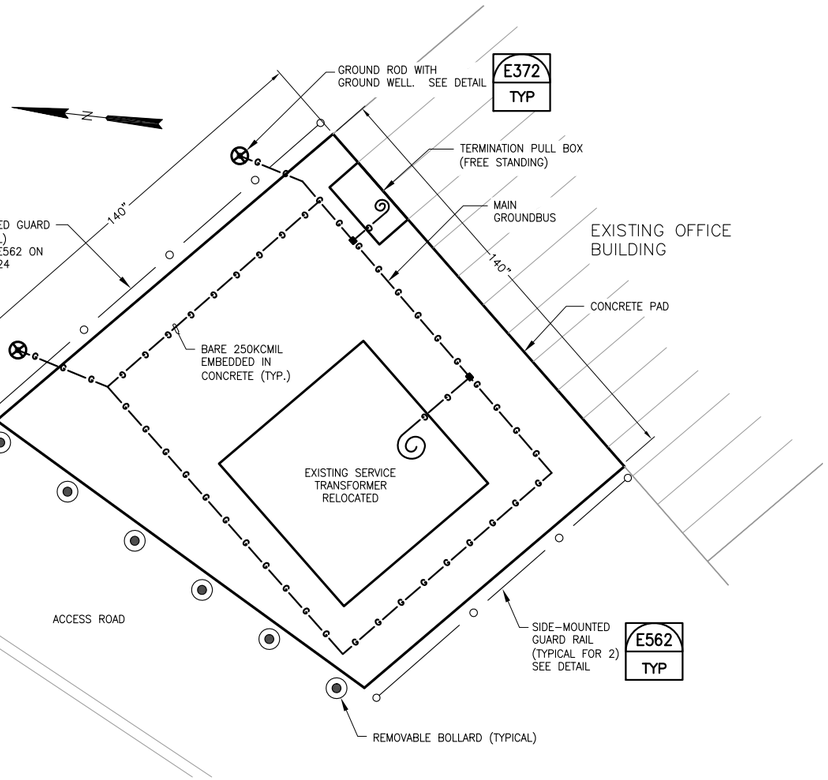

ELECTRIC SERVICE GROUNDING PLAN (A)
SCALE: 1/2" = 10'-0"

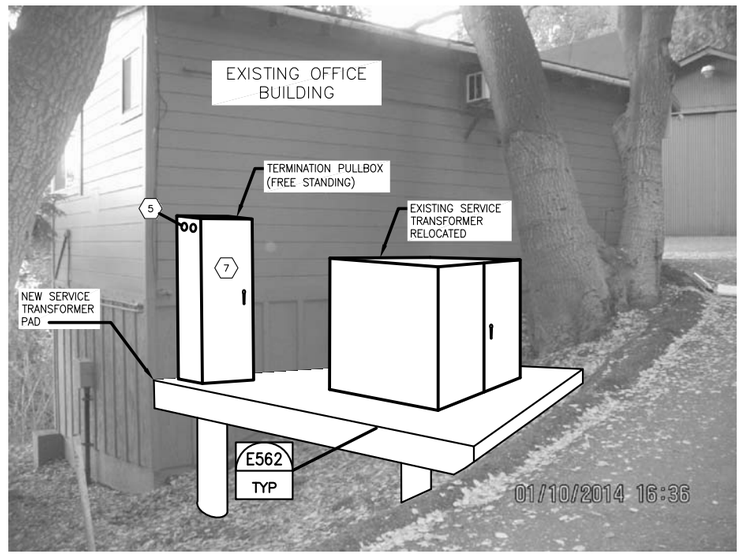

ELECTRIC SERVICE TRANSFORMER (B) 4
SCALE: NTS

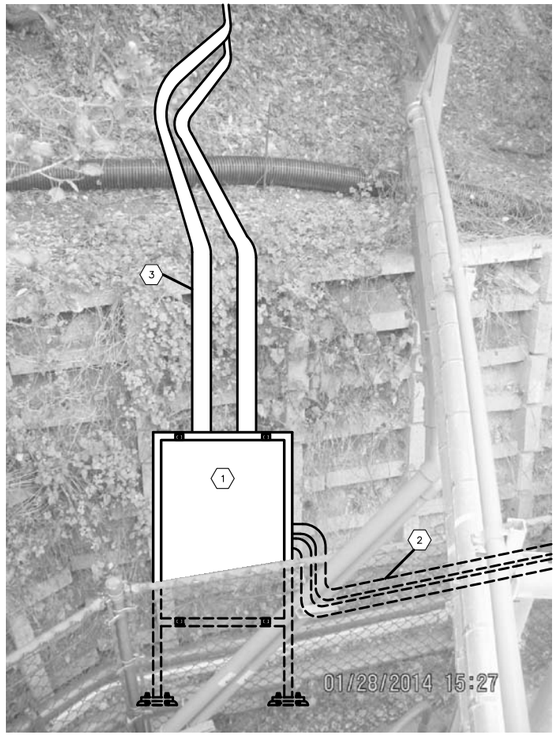

POWER PULL BOX LOCATION (C)
SCALE: NTS

REGISTERED PROFESSIONAL ENGINEER — DEP TAN NGUYEN — No. E17008 — 6/30/17 — ELECTRICAL — STATE OF CALIFORNIA
11/18/16

0" 1" — VERIFY SCALES — BAR IS ONE INCH LONG ON FULL SIZE DRAWING. IF NOT ONE INCH LONG ON THIS DRAWING, ADJUST SCALES ACCORDINGLY

ENGINEERS, INC. Oakland, San Francisco, Orange County, Ca

water and environment

REV	DATE	BY	APVD	DESCRIPTION

DESIGNED	TP
DRAWN	LD
CHECKED	DN

SUBMITTED: MARK TAKEMOTO
RMC PROJECT ENGINEER CE-64369

APPROVED: STEVE CLARY
RMC ENGINEER CE-30318

SAUSALITO · MARIN CITY SANITARY DISTRICT

TREATMENT AND WET WEATHER FLOW UPGRADE

CONSTRUCTION DETAILS
SHEET 3 OF 3

DWG NO	E-24
SHEET NO	190 OF 226
PROJ NO	055-006
DATE	NOVEMBER 2016

FILENAME: 286F_E24 11-18-16 08:42am LocDo || XREFS|| X-SMCSD-TBLK | MTakemoto-PE-stamp |<<--

Last Saved By: LocDo 11-11-16 09:36am

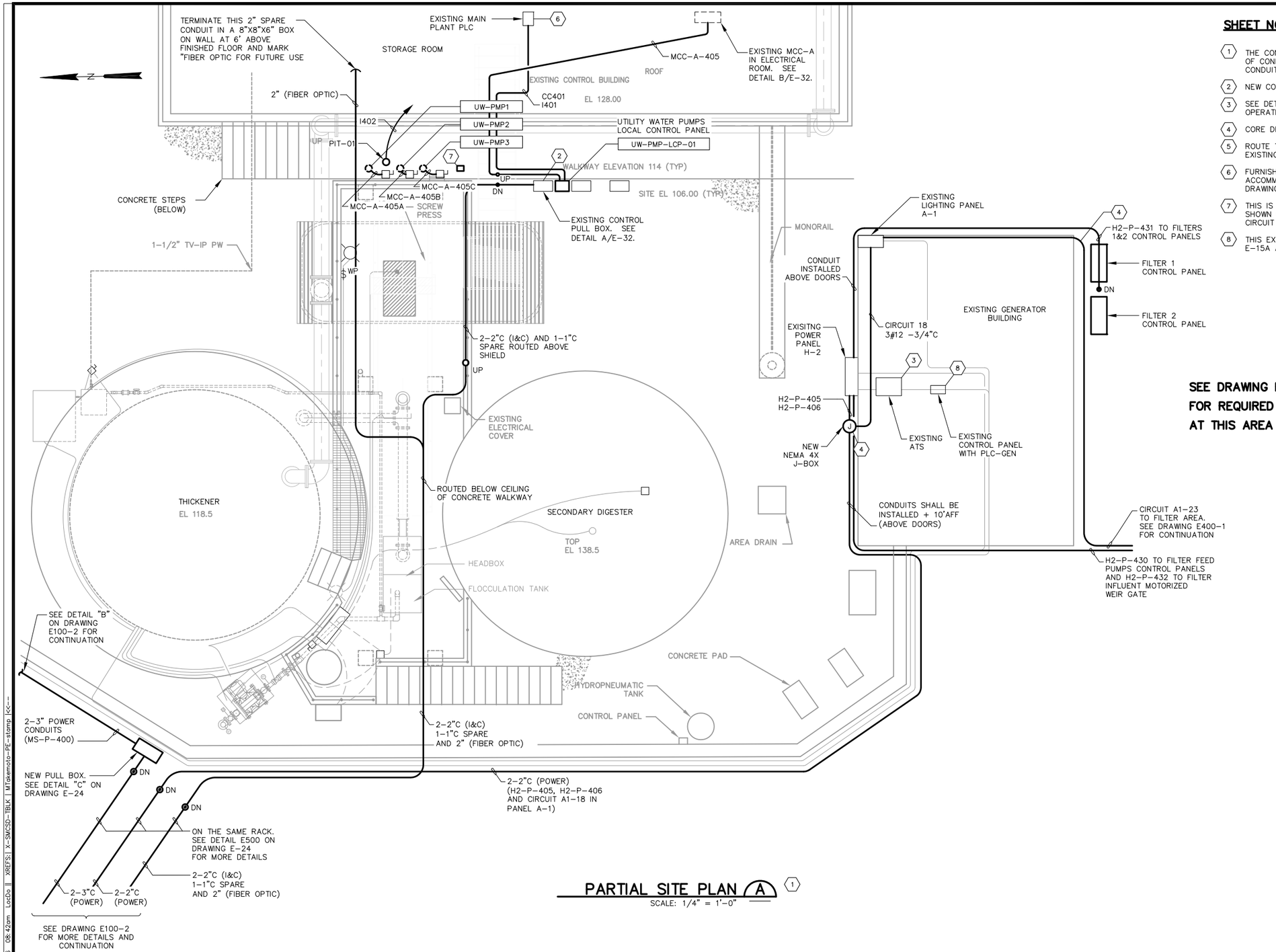

SHEET NOTES:

1. THE CONDUIT ROUTES SHOWN ARE ONLY DIAGRAMMATIC TO ILLUSTRATE GENERAL DIRECTION OF CONDUITS. PROVIDE JUNCTION BOXES, ELBOWS, CONDULETS AS REQUIRED. SUPPORT CONDUITS AS REQUIRED. ALL EXPOSED CONDUITS SHOWN SHALL BE PVC COATED RGS.
2. NEW CONDUITS SHALL BE TERMINATED AT TOP OF EXISTING CONTROL PULL BOX.
3. SEE DETAIL B ON DRAWING E-26 FOR TEMPORARY CONNECTION DURING SWITCHOVER OPERATION.
4. CORE DRILL EXISTING WALL AS REQUIRED (TYPICAL).
5. ROUTE THIS CONDUIT ON FALSE CEILING OF EXISTING CONTROL BUILDING TO REACH EXISTING MCC-A LOCATED IN EXISTING ELECTRICAL ROOM.
6. FURNISHED AND INSTALL IN THIS EXISTING MAIN PLANT PLC WITH NEW I/O CARDS TO ACCOMMODATED SIGNALS FOR UTILITY WATER PUMPS AND THEIR AUXILIARIES. SEE DRAWING E-33 WIRING DETAILS.
7. THIS IS NEW LOCATION OF EXISTING SAMPLE PUMP RELOCATED FROM ORIGINAL LOCATION SHOWN ON DRAWING D600-2. FROM EXISTING LOCATION, EXISTING POWER & CONTROL CIRCUIT SHALL BE EXTENDED AS REQUIRED TO NEW LOCATION.
8. THIS EXISTING PLC SHALL BE REMOVED AND REPLACED WITH NEW PLC. SEE DRAWINGS E-15A AND E-15B FOR ADDITIONAL DETAILS.

SEE DRAWING E400-1 FOR REQUIRED WORK AT THIS AREA

PARTIAL SITE PLAN A (1)

SCALE: 1/4" = 1'-0"

FILENAME: 286F_E25 11-18-16 08:42am LocDo || XREFS: X-SMCSD-TBLK | MTakemoto-PE-stamp |<<--

Last Saved By: LocDo 11-11-16 09:37am

REGISTERED PROFESSIONAL ENGINEER — STEP TAN NGUYEN — No. E17008 — 6/30/17 — ELECTRICAL — STATE OF CALIFORNIA

11/18/16

0" 1" — VERIFY SCALES — BAR IS ONE INCH LONG ON FULL SIZE DRAWING. IF NOT ONE INCH LONG ON THIS DRAWING, ADJUST SCALES ACCORDINGLY

ENGINEERS, INC. Oakland, San Francisco, Orange County, Ca

RMC water and environment

REV	DATE	BY	APVD	DESCRIPTION
1				
2				
3				
4				
5				

DESIGNED	TP
DRAWN	LD
CHECKED	DN

SUBMITTED: MARK TAKEMOTO, RMC PROJECT ENGINEER CE-64369

APPROVED: STEVE CLARY, RMC ENGINEER CE-30318

SAUSALITO · MARIN CITY SANITARY DISTRICT

TREATMENT AND WET WEATHER FLOW UPGRADE

PARTIAL SITE PLAN
THICKENER, SEC. DIGESTER & GEN. BLDG.

DWG NO	E-25
SHEET NO	191 OF 226
PROJ NO	055-006
DATE	NOVEMBER 2016

GENERAL ELECTRICAL SEQUENCE OF WORK 〈3〉〈4〉

1. MODIFICATION OF EXISTING PG&E PRIMARY CIRCUIT TO EXISTING PG&E SERVICE TRANSFORMER.
2. INSTALLATION OF NEW TRANSFORMER'S CONCRETE SLAB AND RELOCATION OF EXISTING PG&E SERVICE TRANSFORMER.
3. INSTALLATION OF REROUTED SECONDARY CIRCUIT TO EXISTING ELECTRICAL SERVICE SWITCHBOARD.
4. MODIFICATIONS OF EXISTING CIRCUIT FEEDING MS–1 AND PANEL PP–3.
5. INSTALLATION OF MOTOR CONTROL CENTER MCC–HW.
6. INSTALLATION OF PROCESS EQUIPMENT REQUIRING POWER AND CONTROL.
7. FUNCTIONAL STARTUP AND TESTING.
8. FINAL ACCEPTANCE TEST.

SHEET NOTES:

〈1〉 THIS TEMPORARY POWER WITH RENTAL GENERATOR IS REQUIRED DURING RELOCATION OF THE EXISTING SERVICE TRANSFORMER. REFER TO SEQUENCE OF WORK IN THE SPECIFICATION FOR ADDITIONAL DETAILS. SAME RENTAL GENERATOR SHALL ALSO BE REQUIRED DURING REMOVAL OF THE EXISTING DIESEL FUEL TANK UNTIL NEW FUEL TANK HAS BEEN INSTALLED AND FULLY FUNCTIONAL.

〈2〉 THE EXISTING 1000 GAL. UNDERGROUND FUEL TANK SHALL BE REMOVED AND REPLACED WITH NEW TANK LOCATED ON TOP DECK OF THE HEADWORKS.

〈3〉 REFER TO SPECIFICATION "SEQUENCE OF WORK" FOR DETAILED REQUIREMENTS. REQUIRED ELECTRICAL WORK ASSOCIATED WITH SEQUENCE NUMBER 1 TO NUMBER 4 IS SHOWN ON DRAWINGS E–2, E–22, E–23, E–24, E–25, AND E–26.

〈4〉 EXISTING PLANT'S MAIN TELEPHONE SERVICE SHALL ALSO BE MODIFIED AND REROUTED CONCURRENTLY WITH SEQUENCES 1 TO 3.

〈5〉 TEMPORARY, PORTABLE POWER CABLES SHALL HAVE AMPACITY EQUIVALENT TO 500A @ 480V 3–PHASE MINIMUM. (TWO SETS OF #2/0 LOCOMOTIVE CABLES ARE REQUIRED).

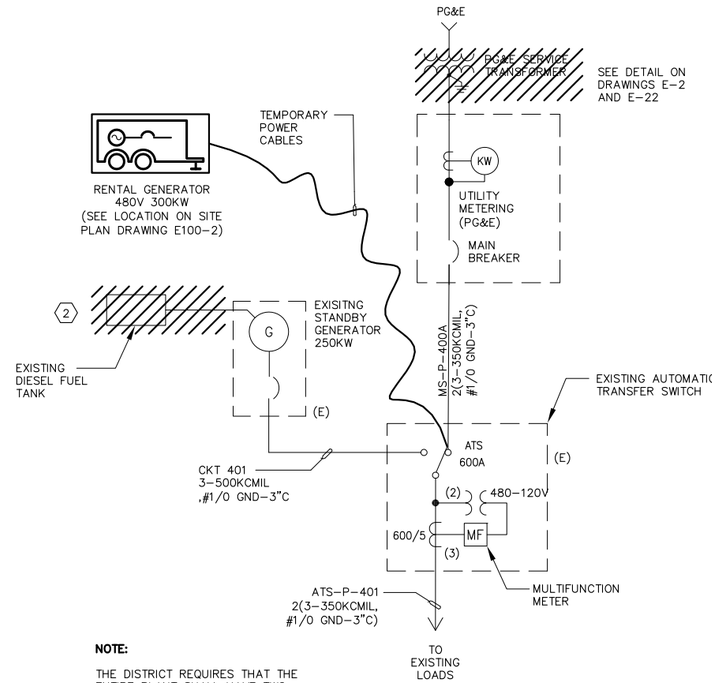

NOTE:

THE DISTRICT REQUIRES THAT THE ENTIRE PLANT SHALL HAVE TWO POWER SOURCES AT ALL TIMES EXCEPT SHORT INTERRUPTIONS (2 HRS OR LESS) PLANNED AND APPROVED IN ADVANCE.

TEMPORARY POWER B 〈1〉

SCALE: NTS

FILENAME: 286F_E26 11-18-16 08:43am LocDo || XREFS:| X-SMCSD-TBLK | MTakemoto-PE-stamp |<<--

Last Saved By: LocDo 11-11-16 10:20am

REGISTERED PROFESSIONAL ENGINEER — DEP TAN NGUYEN — No. E13008 — 6/30/17 — ELECTRICAL — STATE OF CALIFORNIA

11/18/16

0" 1" — VERIFY SCALES — BAR IS ONE INCH LONG ON FULL SIZE DRAWING. IF NOT ONE INCH LONG ON THIS DRAWING, ADJUST SCALES ACCORDINGLY

ENGINEERS, INC. Oakland, San Francisco, Orange County, Ca

RMC water and environment

REV	DATE	BY	APVD	DESCRIPTION

DESIGNED	TP
DRAWN	LD
CHECKED	DN

SUBMITTED: MARK TAKEMOTO, RMC PROJECT ENGINEER CE-64369

APPROVED: STEVE CLARY, RMC ENGINEER CE-30318

SAUSALITO · MARIN CITY SANITARY DISTRICT

TREATMENT AND WET WEATHER FLOW UPGRADE

ELECT. SEQUENCE OF WORK AND TEMP. POWER DURING CONSTRUCTION

DWG NO	E-26
SHEET NO	192 OF 226
PROJ NO	055-006
DATE	NOVEMBER 2016

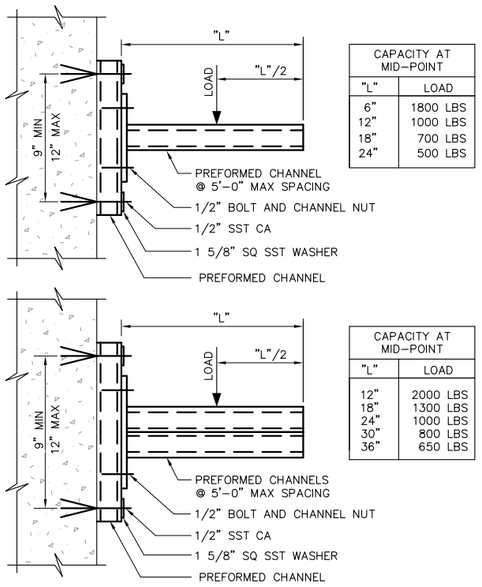

CAPACITY AT MID-POINT	
"L"	LOAD
6"	1800 LBS
12"	1000 LBS
18"	700 LBS
24"	500 LBS

CAPACITY AT MID-POINT	
"L"	LOAD
12"	2000 LBS
18"	1300 LBS
24"	1000 LBS
30"	800 LBS
36"	650 LBS

NOTE:

1. HOT-DIP GALVANIZE THE PREFORMED CHANNELS AND OTHER ACCESSORIES AFTER FABRICATION.

E302 TYP CONDUIT SUPPORT

SCALE: NTS

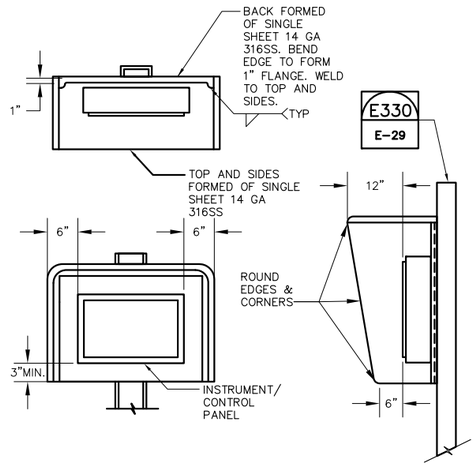

NOTES:

1. ALL EXPOSED EDGES TO BE GROUND SMOOTH AND BURR FREE.
2. MOUNT SUN SHIELD BETWEEN INSTRUMENT AND STANCHION. USE STAINLESS STEEL BOLTS AND INSULATING WASHERS AND SLEEVES.

E345 TYP SUN SHIELD

SCALE: NTS

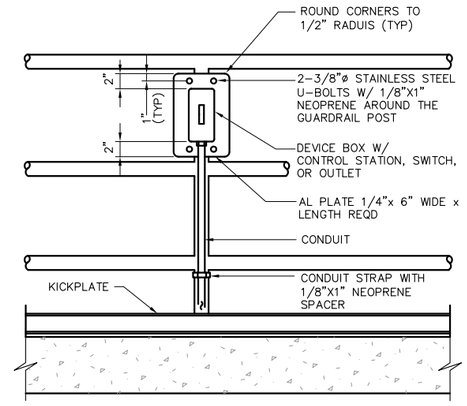

GUARDRAIL MOUNTED E350 TYP CONTROL SWITCH OR STATION

SCALE: SCALE

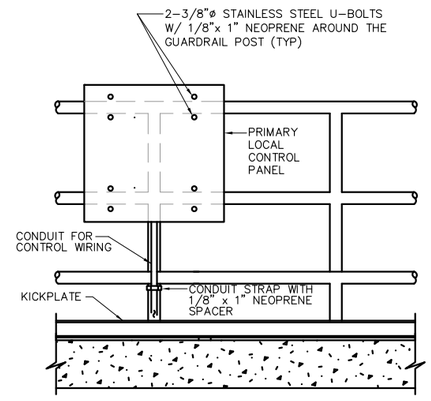

GUARDRAIL MOUNTED E355 TYP CONTROL STATION

SCALE: SCALE

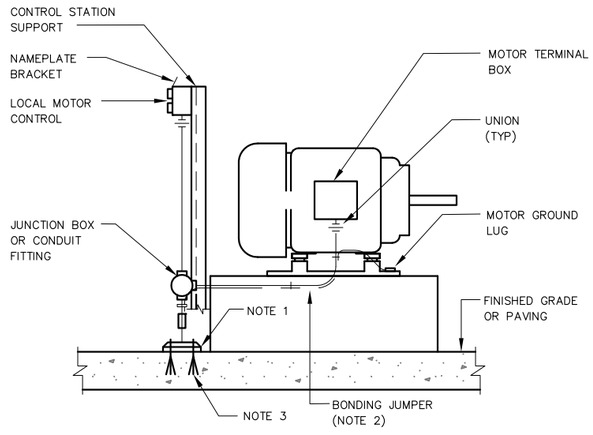

GENERAL NOTES FOR MOTOR INSTALLATION DETAIL E410A & E410B

NOTES:

1. ALL CONDUITS, SLEEVES, AND SUPPORTS BROUGHT UP THROUGH CONCRETE SHALL HAVE A 1"x3" RADIUS CONCRETE CONE BUILT UP AROUND BASE.
2. BONDING JUMPER IS REQUIRED ON ALL INSTALLATIONS WITH FLEXIBLE CONDUITS SPIRAL WIRE BONDING JUMPER AROUND FLEXIBLE CONDUIT.
3. FOR STATIONS LOCATED ON EXISTING CONCRETE SLAB OR DECK, BOLT THE SUPPORT BASE PLATE WITH FOUR 3/8" DIA, 5" LONG STAINLESS STEEL ANCHOR BOLTS.

MOTORS WITH COMBINED E410A TYP POWER & CONTROL - RGS CONDUIT

SCALE: NTS

(INSTALLATION SIMILAR FOR BOTH HORIZONTAL AND VERTICAL MOTORS 50 HP MOTORS OR LESS WITH MAXIMUM CONDUCTOR SIZE OF #2 AWG)

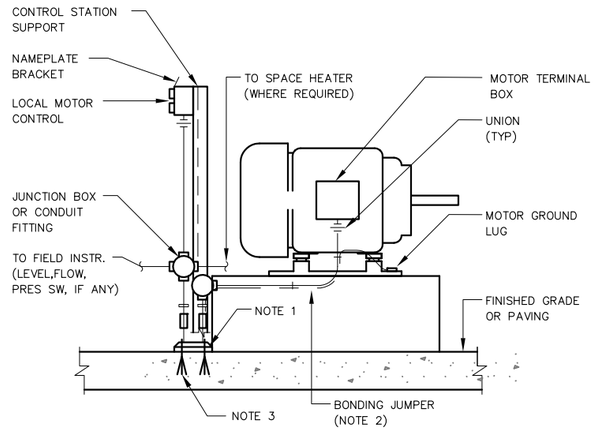

MOTORS WITH SEPARATE POWER E410B TYP & CONTROL - RGS CONDUIT

SCALE: NTS

(INSTALLATION SIMILAR FOR BOTH HORIZONTAL AND VERTICAL MOTORS OVER 50 HP MOTORS WITH LARGER THAN #2 AWG CONDUCTORS)

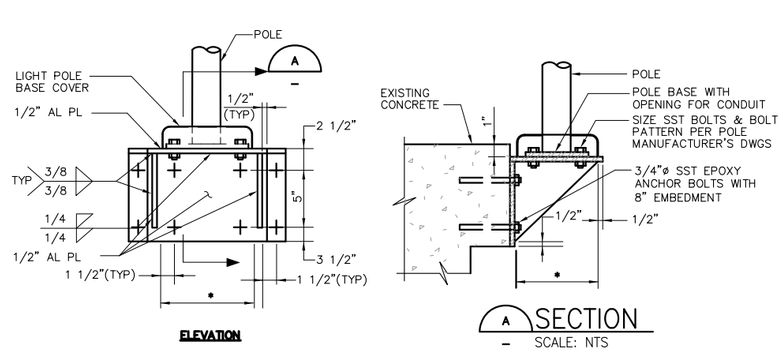

ELEVATION

NOTES:

1. COAT AL SURFACES IN CONTACT WITH CONCRETE PER SPECS.
2. MAXIMUM POLE HEIGHT = 15'-0".
3. * = LARGEST OF OD OF LIGHT POLE BASE + 2", OD OF LIGHT POLE BASE COVER + 1", AND 12".
4. USE SIMPSON SET-XP EPOXY (OR EQUAL) FOR ANCHOR BOLTS.

E508 TYP LIGHTING POLE MOUNTING CONCRETE

SCALE: NTS

REGISTERED PROFESSIONAL ENGINEER — DIEP TAN NGUYEN — No. E17508 — 6/30/17 — ELECTRICAL — STATE OF CALIFORNIA

11/18/16

0" — 1" — VERIFY SCALES — BAR IS ONE INCH LONG ON FULL SIZE DRAWING. IF NOT ONE INCH LONG ON THIS DRAWING, ADJUST SCALES ACCORDINGLY

ENGINEERS, INC. Oakland, San Francisco, Orange County, Ca.

RMC water and environment

REV	DATE	BY	APVD	DESCRIPTION
1				
2				
3				
4				
5				

DESIGNED	TP
DRAWN	LD
CHECKED	DN

SUBMITTED: MARK TAKEMOTO — RMC PROJECT ENGINEER CE-64369

APPROVED: STEVE CLARY — RMC ENGINEER CE-30318

SAUSALITO · MARIN CITY SANITARY DISTRICT

TREATMENT AND WET WEATHER FLOW UPGRADE

TYPICAL CONSTRUCTION DETAILS SHEET 1 OF 3

DWG NO	E-27
SHEET NO	193 OF 226
PROJ NO	055-006
DATE	NOVEMBER 2016

FILENAME: 286F_E27 11-18-16 09:53am LocDo || XREFS:| X-SMCSD-TBLK | MTakemoto-PE-stamp |<<--

Last Saved By: LocDo 11-18-16 09:52am

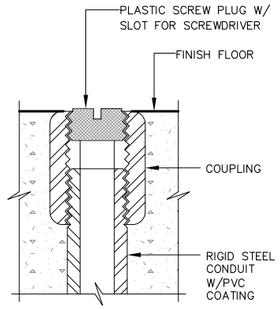

E150 CONDUIT FLOOR STUB–UP
TYP SCALE: NTS

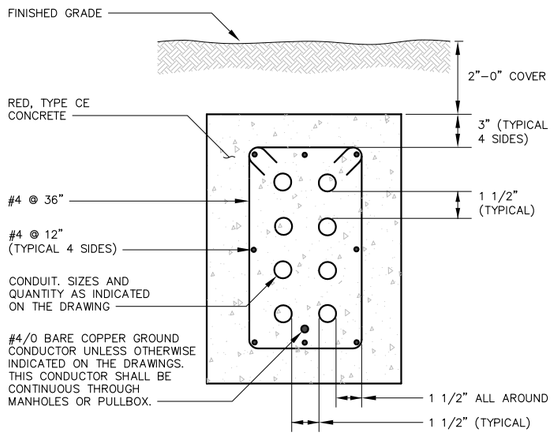

NOTES:

1. DIMENSIONS ARE MINIMUM UNLESS OTHERWISE INDICATED ON THE DRAWINGS.
2. QUANTITY OF CONDUITS SHALL BE AS PER PLAN DRAWINGS.

E151 REINFORCE CONCRETE DUCTBANK
TYP SCALE: NTS

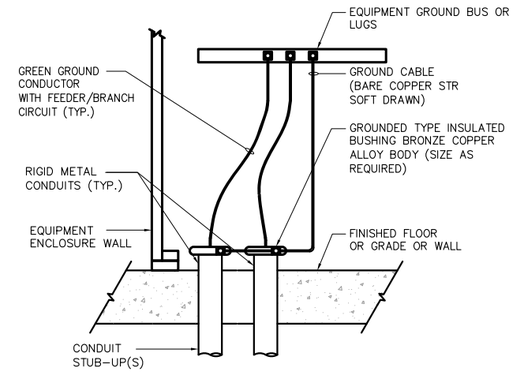

E374 CONDUIT GROUNDING
TYP SCALE: NTS

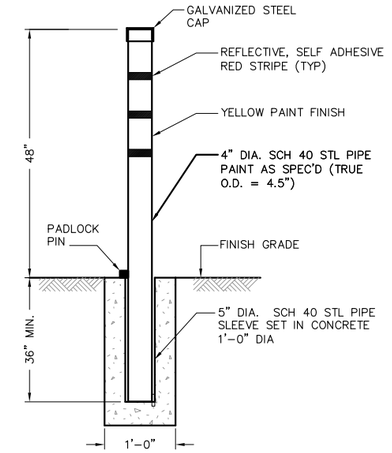

E526 REMOVABLE GUARD POST
TYP SCALE: NTS

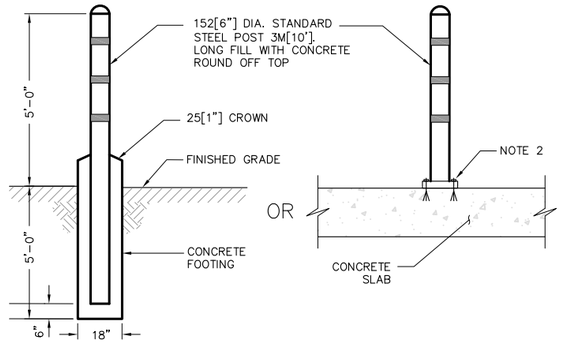

NOTES:

1. POLE SHALL BE PAINTED YELLOW WITH REFLECTIVE RED STRIPES.
2. BASE SHALL BE CIRCULAR WELDED TO POLE WITH FOUR HOLES SUITABLE FOR 3/8" DIA. 5" LONG SS ANCHOR BOLTS.

E527 PERMANENT GUARD POST
TYP SCALE: NTS



NOTE:

TAGS SHALL BE PROVIDED AT EACH CONDUIT TERMINATION.

E805 CONDUIT TAGGING
TYP SCALE: NTS

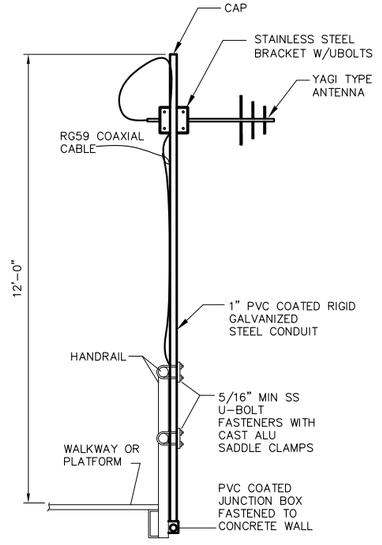

A – RADIO ANTENNA MOUNTING DETAIL
SCALE: NTS

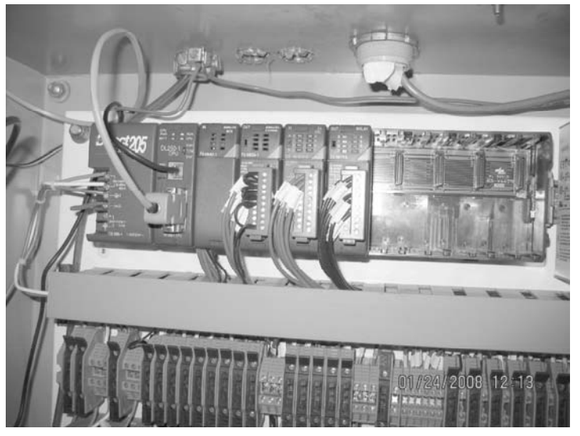

THIS PLC AND ENCLOSURE SHALL BE DISCONNECTED, REMOVED AND REPLACED COMPLETELY WITH NEW. SEE DRAWINGS E–15A & E–15B

B – (E) PLC–GEN (GENERATOR BUILDING)
SCALE: NTS

REGISTERED PROFESSIONAL ENGINEER — DIEP TAN NGUYEN — No. E17008 — 03/31/17 — ELECTRICAL — STATE OF CALIFORNIA

11/18/16

0" 1" — VERIFY SCALES — BAR IS ONE INCH LONG ON FULL SIZE DRAWING. IF NOT ONE INCH LONG ON THIS DRAWING, ADJUST SCALES ACCORDINGLY

ENGINEERS, INC. Oakland, San Francisco, Orange County, Ca

RMC water and environment

REV	DATE	BY	APVD	DESCRIPTION

DESIGNED TP
DRAWN LD
CHECKED DN

SUBMITTED: MARK TAKEMOTO, RMC PROJECT ENGINEER CE-64369
APPROVED: STEVE CLARY, RMC ENGINEER CE-30318

SAUSALITO · MARIN CITY SANITARY DISTRICT

TREATMENT AND WET WEATHER FLOW UPGRADE

TYPICAL CONSTRUCTION DETAILS
SHEET 2 OF 3

DWG NO E-28
SHEET NO 194 OF 226
PROJ NO 055-006
DATE NOVEMBER 2016

FILENAME: 286F_E28 11-18-16 09:53am LocDo || XREFS: | X-SMCSD-TBLK | MTakemoto-PE-stamp |<<--

Last Saved By: LocDo 11-18-16 09:52am

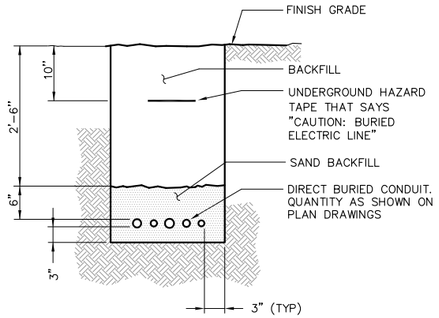

NOTES:

1. ALL DIMENSIONS ARE MINIMUM UNLESS OTHERWISE INDICATED ON THE DRAWINGS.
2. REFER TO SPECIFICATIONS FOR TRENCH BACKFILL REQUIREMENTS.

E131 TYP DIRECT BURIED CONDUITS

SCALE: NTS

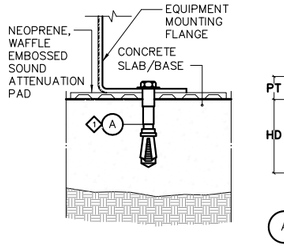

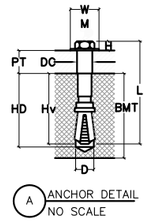

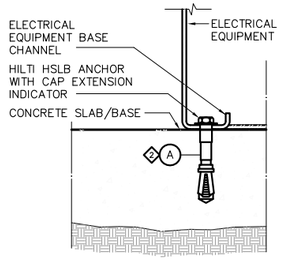

ANCHOR SIZE	M10/20	M16/25
SETTING DETAILS	1	2
D (in) DRILL BIT DIA.	.585	.936
HD (in) HOLE DEPTH	3.315	4.875
Hv (in) MIN. DEPTH OF EMBEDMENT	2.925	4.095
PT (in) MAX. THICKNESS FASTENED	.780	.975
L (in) ANCHOR LENGTH	4.173	5.772
H (in) HEAD HEIGHT + WASHER	.390	.546
M (FT.-LBS.) MAX. TIGHTENING TORQUE	1.56	5.850
M (FT.-LBS.) MIN. TIGHTENING TORQUE	1.326	4.875
MAX. GAP (in)	.195	.3510
DC (in) CLEARANCE HOLE	.663-.702	1.014-1.092
W (in) WASHER DIAMETER	.975	1.560
BMT (in) MIN. BASE MATERIAL THICKNESS (CONCRETE THICKNESS)	5.46	7.020

1 SHALL BE USED FOR TRANSFORMER ATTACHMENT.

2 SHALL BE USED FOR MAIN SWITCHBOARD (MSB), MOTOR CONTROL CENTERS (MCC), AND DISTRIBUTION BOARDS.

NOTES:

1. EXPANSION ANCHORS SHALL BE A SINGLE-END EXPANSION SHIELD ANCHOR WHICH MEETS THE DESCRIPTIVE PART OF FEDERAL SPECIFICATIONS FF-S-325 GROUP II, TYPE 2, CLASS 2, STYLE 1. ANCHORS SHALL BE DIMENSIONED AS PER HILTI FASTENING SYSTEMS, 5400 SOUTH 122nd EAST AVENUE, TULSA, OK 74146.
2. HSLB EXPANSION ANCHORS SHALL BE INSTALLED IN HOLES DRILLED WITH HILTI CARBIDE TIPPED DRILL BITS. ANCHORS SHALL BE INSTALLED AND TORQUED PER MANUFACTURERS RECOMMENDATIONS.
3. INSTALL ANCHORS 15" ON CENTER AROUND ENTIRE PERIMETER OF EQUIPMENT. 2 MINIMUM PER SIDE.

E326 TYP ELECTRICAL EQUIPMENT MOUNTING DETAIL

SCALE: NTS

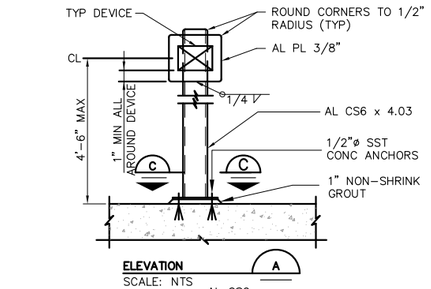

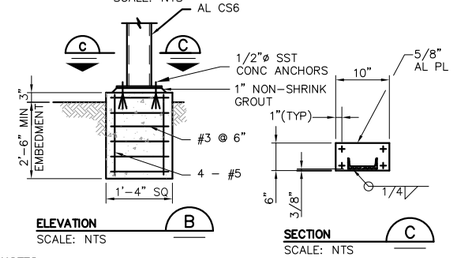

NOTES:

1. WHERE SEPARATE FOUNDATION IS REQUIRED, SEE B.
2. COAT ALUMINUM SURFACES IN CONTACT W/CONCRETE PER SPECS.
3. USE SST FASTENERS FOR MOUNTING DEVICES.
4. WEIGHT OF DEVICE(S) SHALL NOT EXCEED 100 POUNDS.

E330 TYP DEVICE SUPPORT AND MOUNTING

SCALE: NTS

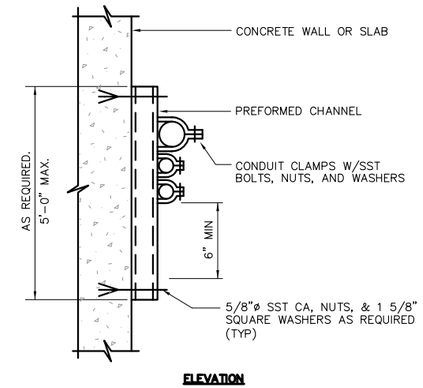

NOTES:

1. THIS DETAIL TYPICAL FOR BOTH VERTICAL AND HORIZONTAL MOUNTING.
2. PREFORMED CHANNEL, FITTINGS, AND CLAMPS SHALL BE HOT-DIP GALVANIZED STEEL FOR NEMA 12 AREAS AND STAINLESS STEEL FOR NEMA 4X AREAS. FIELD COAT ALL CUTS PER SPECIFICATIONS.
3. CHANNELS TO BE SPACED AT 5'-0" OC MAXIMUM.

E340 TYP CONDUIT SUPPORT

SCALE: NTS

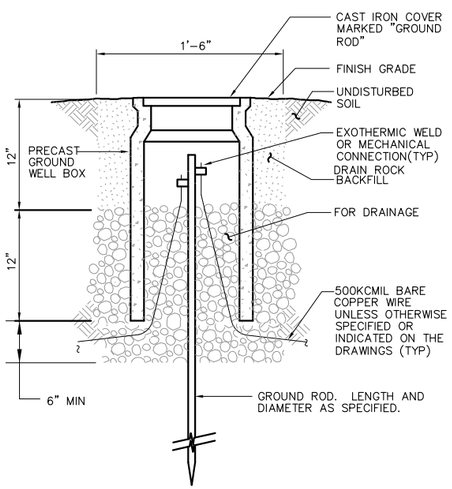

E370 TYP GROUND WELL

SCALE: NTS

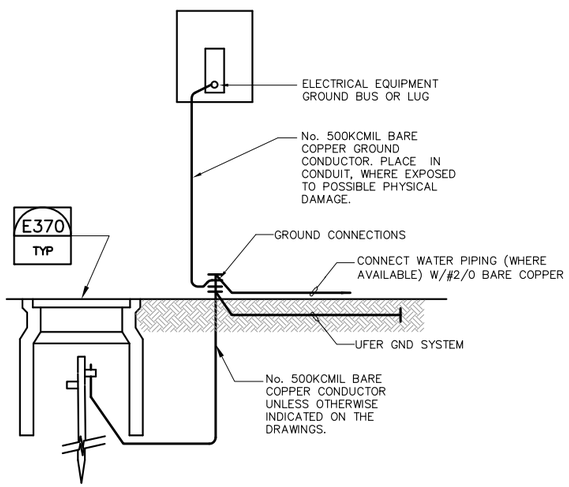

E372 TYP SERVICE GROUNDING DETAIL

SCALE: NTS

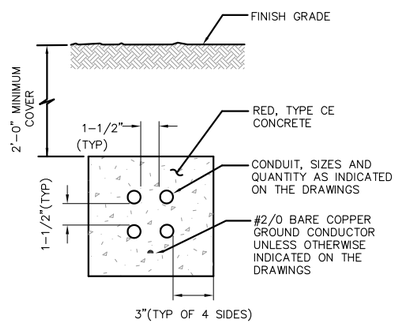

NOTES:

1. DIMENSIONS ARE MINIMUM UNLESS OTHERWISE INDICATED ON THE DRAWINGS.
2. THIS TYPICAL DETAIL IS FOR NON-TRAFFIC AREAS ONLY. OR WHERE SPECIFICALLY INDICATED ON THE DRAWINGS.

E404 TYP UNREINFORCED CONCRETE DUCTBANK

SCALE: NTS

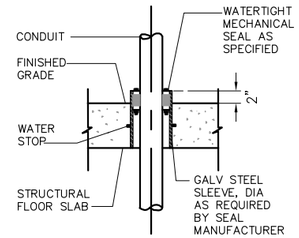

A CONDUIT PENETRATION

– SCALE: NTS

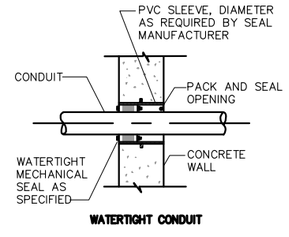

B PENETRATION

– SCALE: NTS

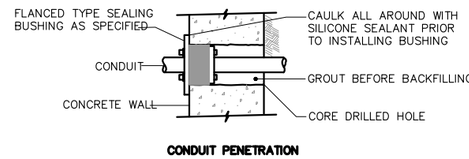

C THROUGH EXISTING CONCRETE WALL

– SCALE: NTS

E418 TYP DETAILED CONDUIT PENETRATION

SCALE: SCALE

FILENAME: 286F_E29 11-18-16 08:43am LocDo || XREFS:| X-SMCSD-TBLK | MTakemoto-PE-stamp |<<--

REGISTERED PROFESSIONAL ENGINEER — DEEP TAN NGUYEN — No. E19008 — 6/2017 — ELECTRICAL — STATE OF CALIFORNIA

11/18/16

0" 1" — VERIFY SCALES — BAR IS ONE INCH LONG ON FULL SIZE DRAWING. IF NOT ONE INCH LONG ON THIS DRAWING, ADJUST SCALES ACCORDINGLY

ENGINEERS, INC. Oakland, San Francisco, Orange County, Ca.

RMC water and environment

REV	DATE	BY	APVD	DESCRIPTION

DESIGNED TN
DRAWN LD
CHECKED DN

SUBMITTED: MARK TAKEMOTO, RMC PROJECT ENGINEER CE-64369

APPROVED: STEVE CLARY, RMC ENGINEER CE-30318

SAUSALITO · MARIN CITY SANITARY DISTRICT

TREATMENT AND WET WEATHER FLOW UPGRADE

TYPICAL CONSTRUCTION DETAILS SHEET 3 OF 3

DWG NO E-29
SHEET NO 195 OF 226
PROJ NO 055-006
DATE NOVEMBER 2016

Last Saved By: LocDo 11-11-16 09:42am

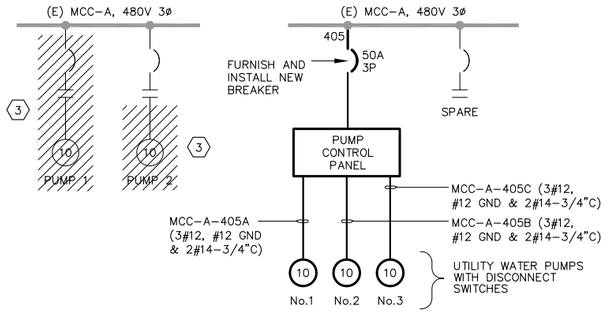

MCC-A SINGLE LINE MODIFICATIONS (A)

SCALE: NTS

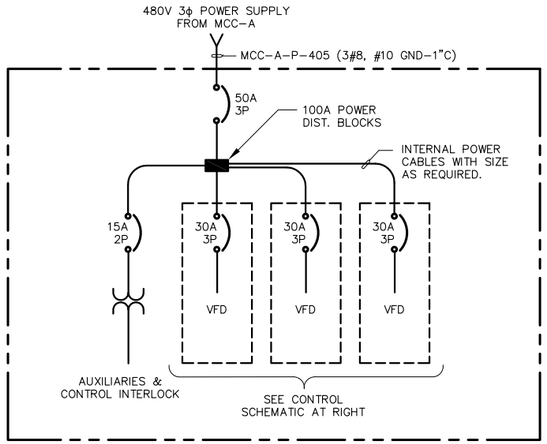

UTILITY WATER PUMPS POWER FEED (B)

SCALE: NTS

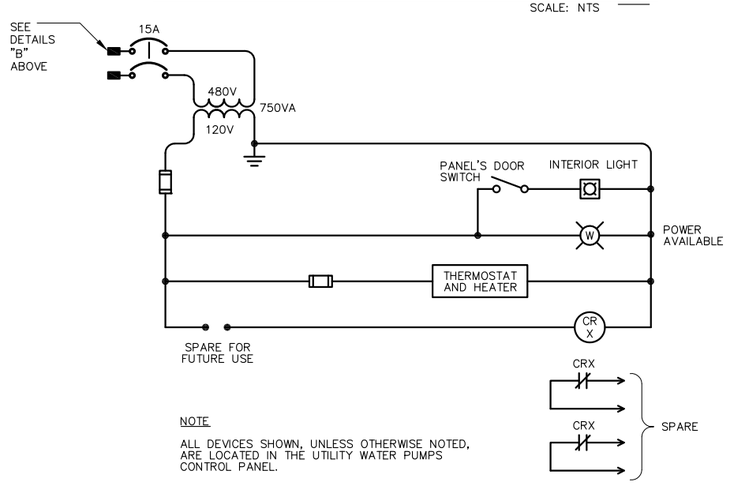

NOTE

ALL DEVICES SHOWN, UNLESS OTHERWISE NOTED, ARE LOCATED IN THE UTILITY WATER PUMPS CONTROL PANEL.

UTILITY WATER PUMPS CONTROL INTERLOCK (C)

SCALE: NTS

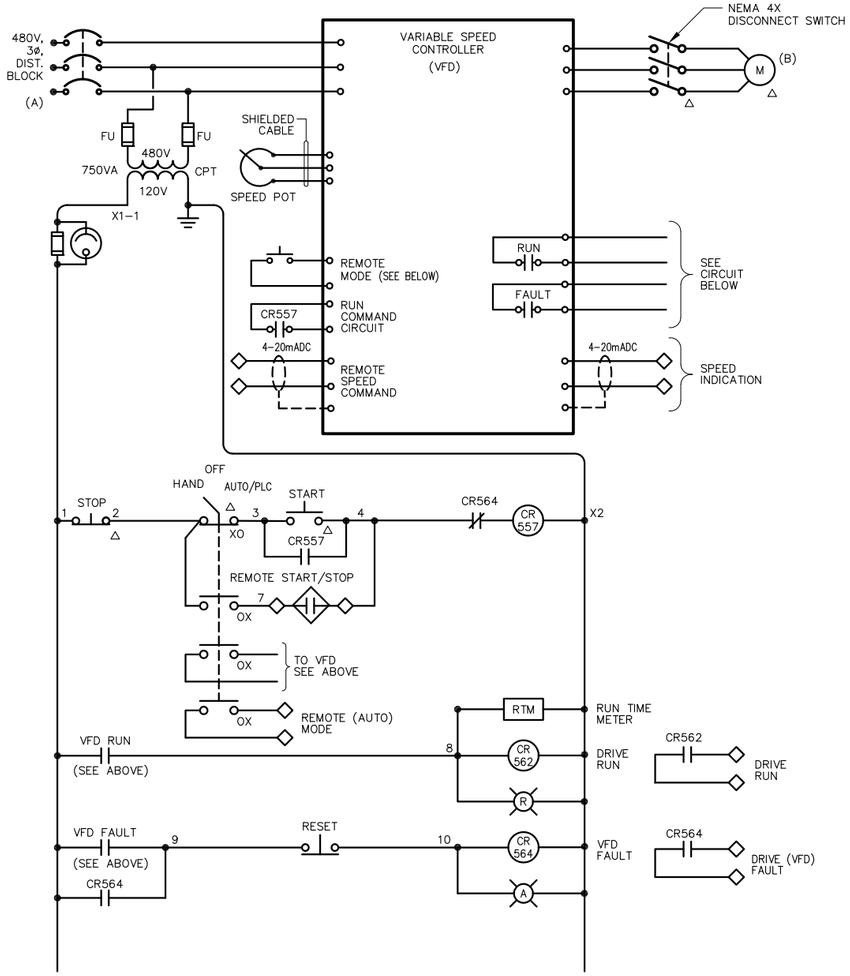

NOTES:

1. U.O.N., ALL DEVICES SHOWN ARE LOCATED IN UTILITY WATER PUMPS CONTROL PANEL.
2. THIS CONTROL SCHEMATIC IS TYPICAL FOR 3 PUMPS.

EQUIPMENT	(A)	(B)	NOTES
UTILITY WATER PUMP NO. 1	MAIN DIST. POWER BLOCK	MOTOR	
UTILITY WATER PUMP NO. 2	MAIN DIST. POWER BLOCK	MOTOR	
UTILITY WATER PUMP NO. 3	MAIN DIST. POWER BLOCK	MOTOR	

UTILITY WATER PUMPS CONTROL DIAGRAM (D)

SCALE: NTS

SHEET NOTES:

1. THIS PANEL SHALL BE NEMA 3RX (STAINLESS STEEL) WITH ALL DEVICES MOUNTED ON THE PANELS'S DOOR SUITABLE FOR CORROSIVE ENVIRONMENT. SEE DIV 16 SPECS FOR DETAILED REQUIREMENTS.
2. THIS INDICATOR MAY BE DELETED IF THE KEYPAD ALREADY HAS THIS FUNCTION.
3. REMOVE EXISTING CONDUCTOR IN EXISTING CONDUITS AS SHOWN.

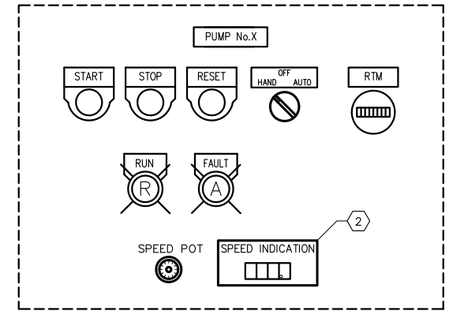

TYPICAL CONTROL DEVICES (F)

TYPICAL FOR THREE PUMPS SCALE: NTS

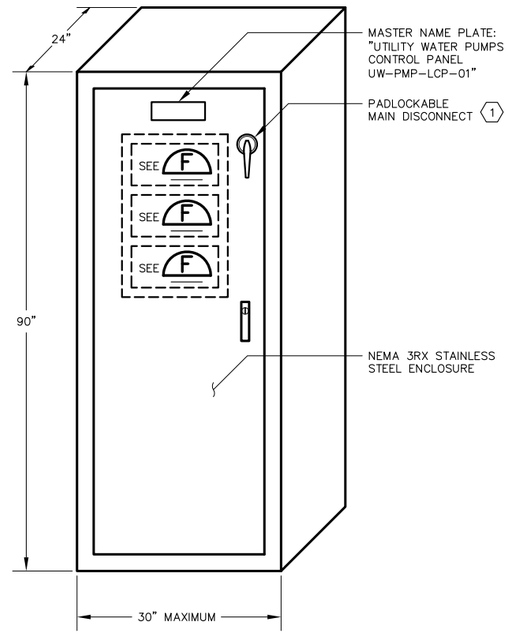

UTILITY WATER PUMPS CONTROL PANEL (E)

SCALE: NTS

FILENAME: 286F_E30 11-18-16 08:43am LocDo || XREFS:| X-SMCSD-TBLK | MTakemoto-PE-stamp |<<--



0" 1" — VERIFY SCALES — BAR IS ONE INCH LONG ON FULL SIZE DRAWING. IF NOT ONE INCH LONG ON THIS DRAWING, ADJUST SCALES ACCORDINGLY

ENGINEERS, INC. Oakland, San Francisco, Orange County, Ca.

RMC water and environment

REV	DATE	BY	APVD	DESCRIPTION
△				
△				
△				
△				
△				

DESIGNED	TP
DRAWN	LD
CHECKED	DN

SUBMITTED: MARK TAKEMOTO, RMC PROJECT ENGINEER CE-64369

APPROVED: STEVE CLARY, RMC ENGINEER CE-30318

SAUSALITO · MARIN CITY SANITARY DISTRICT

TREATMENT AND WET WEATHER FLOW UPGRADE

UTILITY WATER PUMP CONTROL DIAGRAM AND CONTROL PANEL

DWG NO	E-30
SHEET NO	196 OF 226
PROJ NO	055-006
DATE	NOVEMBER 2016

Last Saved By: LocDo 11-11-16 09:43am

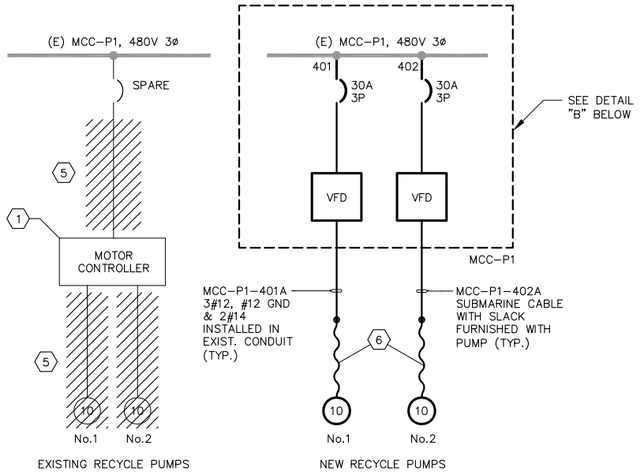

EXISTING MCC–P1 ONE–LINE MODIFICATIONS (A)

SCALE: NTS

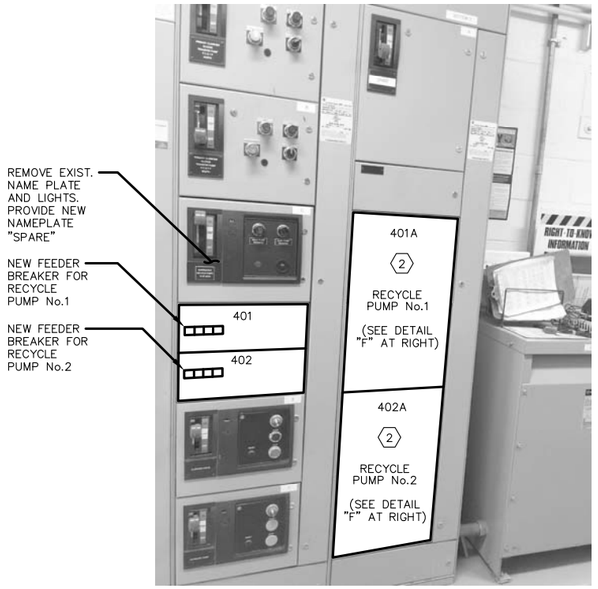

EXISTING MCC–P1 MODIFICATIONS (B)

SCALE: NTS

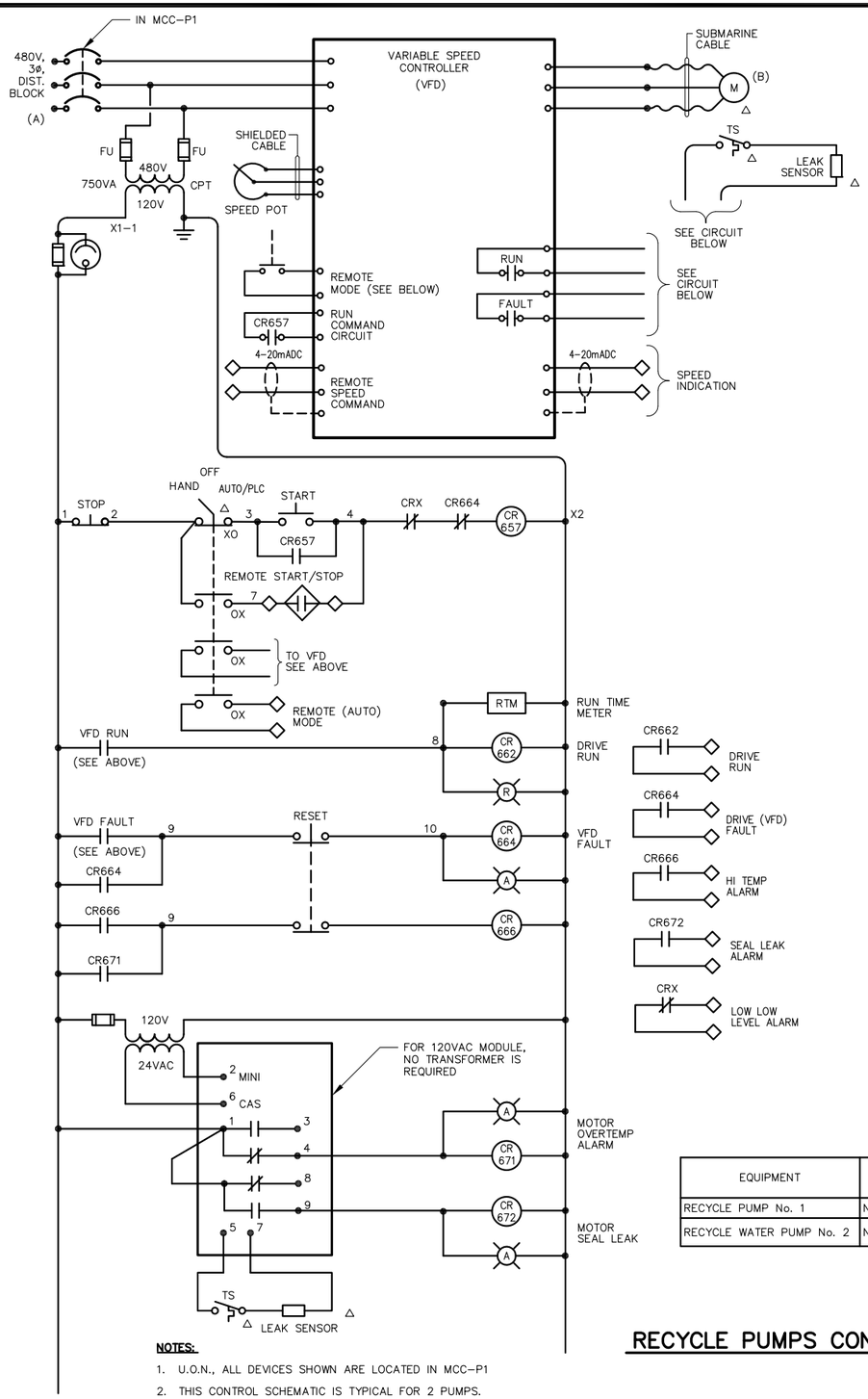

NOTES:

1. U.O.N., ALL DEVICES SHOWN ARE LOCATED IN MCC–P1
2. THIS CONTROL SCHEMATIC IS TYPICAL FOR 2 PUMPS.

RECYCLE PUMPS CONTROL DIAGRAM (C) (3)

SCALE: NTS

SHEET NOTES:

1. SEE DETAIL D/E–32 FOR WORK REQUIRED AT THIS EXISTING PANEL.
2. MODIFY THESE COMPARTMENTS TO MAKE ROOM FOR NEW VFD AND ASSOCIATED DEVICES AS SHOWN ON CONTROL SCHEMATIC DIAGRAM ON THIS DRAWING. PROVIDE NEW DOOR WITH DEVICES AS PER DETAIL "F" BELOW.
3. UNLESS OTHERWISE NOTED, ALL EQUIPMENT AND DEVICES SHOWN ARE LOCATED IN MCC–P1.
4. THIS INDICATOR MAY BE DELETED IF THE KEYPAD ALREADY HAS SPEED INDICATION FUNCTION.
5. REMOVE EXISTING CONDUCTORS IN EXISTING CONDUITS TO MAKE ROOM FOR PULLING NEW CONDUCTORS AS SHOWN.
6. CABLE SPLICES SHALL BE MADE IN ENCLOSURE FORMERLY USED AS MOTOR CONTROLLER LOCATED NEAR THE PUMPS.

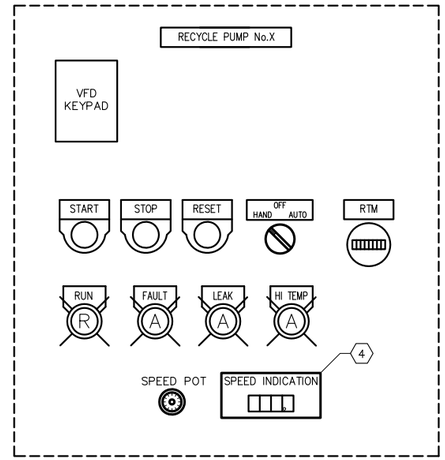

TYPICAL CONTROL DEVICES (F)

TYPICAL FOR TWO PUMPS SCALE: NTS

EQUIPMENT	(A)	(B)	NOTES
RECYCLE PUMP No. 1	NEW FEEDER BREAKER	SUBMERSIBLE MOTOR	
RECYCLE WATER PUMP No. 2	NEW FEEDER BREAKER	SUBMERSIBLE MOTOR	

REGISTERED PROFESSIONAL ENGINEER DIEP TAN NGUYEN No. E 20317 ELECTRICAL STATE OF CALIFORNIA
11/18/16

0" 1" — VERIFY SCALES — BAR IS ONE INCH LONG ON FULL SIZE DRAWING. IF NOT ONE INCH LONG ON THIS DRAWING, ADJUST SCALES ACCORDINGLY

ENGINEERS, INC. Oakland, San Francisco, Orange County, Ca.

RMC water and environment

REV	DATE	BY	APVD	DESCRIPTION
1				
2				
3				
4				
5				

DESIGNED TP
DRAWN LD
CHECKED DN

SUBMITTED: MARK TAKEMOTO, RMC PROJECT ENGINEER CE-64369
APPROVED: STEVE CLARY, RMC ENGINEER CE-30318

SAUSALITO · MARIN CITY SANITARY DISTRICT

TREATMENT AND WET WEATHER FLOW UPGRADE

EXISTING MCC-P1 MODIFICATIONS AND RECYCLE PUMPS

DWG NO E-31
SHEET NO 197 OF 226
PROJ NO 055-006
DATE NOVEMBER 2016

FILENAME: 286F_E31 11-18-16 08:43am LocDo || XREFS|| X-SMCSD-TBLK | MTakemoto-PE-stamp |<<--

Last Saved By: LocDo 11-11-16 09:43am

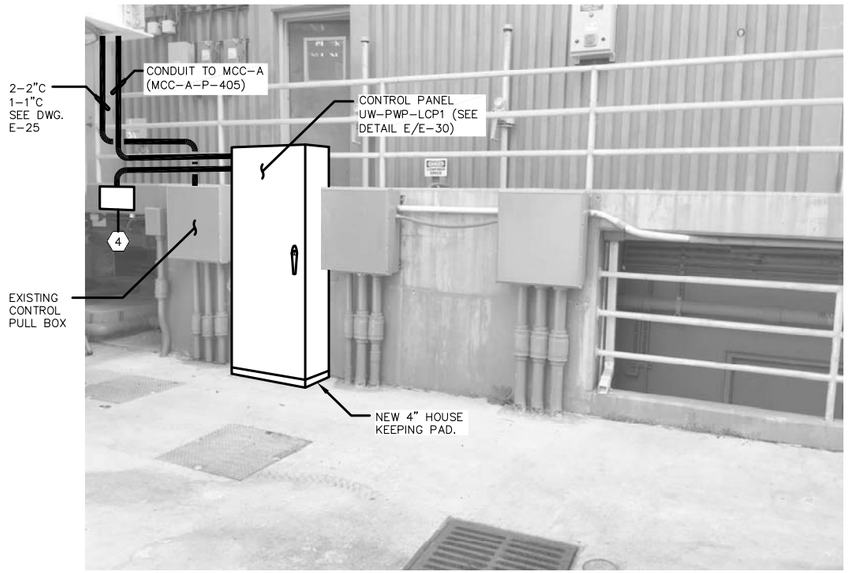

UTILITY WATER PUMPS CONTROL PANEL LOCATIONNS (A)

SCALE: NTS



EXISTING MCC-A MODIFICATIONS (B)

SCALE: NTS

SHEET NOTES:

1. REMOVE ALL INTERNAL AND EXTERNAL DEVICES IN THIS PANEL. PLUG EACH HOLE WITH PROPER HEAVY DUTY PLUG. THIS BOX WILL BECOME A PULL BOX WITHOUT ANY INTERNAL ARCING DEVICES.
2. REMOVE EXISTING ANALYZER CONTROLLERS AND ASSOCIATED WIRINGS. INSTALL NEW BLANK TO COVER THE EXISTING CUTOUTS TO MAKE ROOM FOR NEW DIN RAIL MOUNTED I/O FOR THE EXISTING PLC-6 LOCATED INSIDE THIS PANEL.
3. THIS AREA IS CLASS I DIV1 HAZARDOUS LOCATION INSTALLATION AND MATERIALS AS WELL AS EQUIPMENT SHALL BE CLASSIFIED AS SUCH.
4. FURNISH AND INSTALL A NEMA 4X STAINLESS STEEL PULL BOX 12"X18"X8" DEEP FOR CONDUITS/CABLE TO FEED UTILITY WATER PUMPS.
5. THIS EXISTING MOTOR STARTER AND ACCESSORIES SHALL REMAIN AS SPARE REMOVE EXISTING NAMEPLATE "RECLAIM PUMP No.2"
6. REMOVE EXISTING MOTOR STARTER & ACCESSORIES OF EXISTING RECLAIM PUMP No.1. FURNISH AND INSTALL A NEW 50A 3P CIRCUIT BREAKER TO FEED UTILITY WATER PUMPS LOCAL CONTROL PANEL. PROVIDE AND INSTALL NEW NAMEPLATE "UTILITY WATER PUMPS CONTROL PANEL UW-PMP-LCP01."

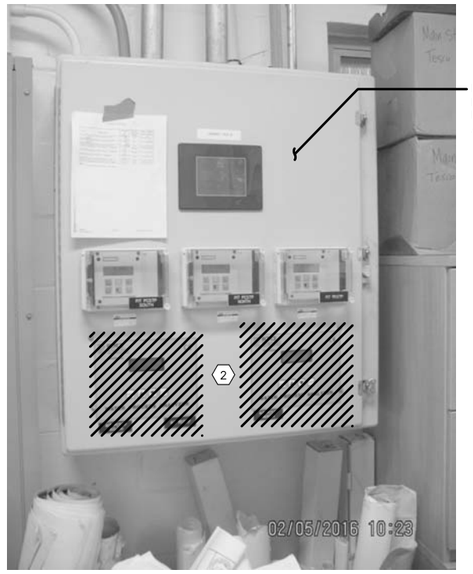

EXISTING PLC-6 MODIFICATIONS (C)

SCALE: NTS

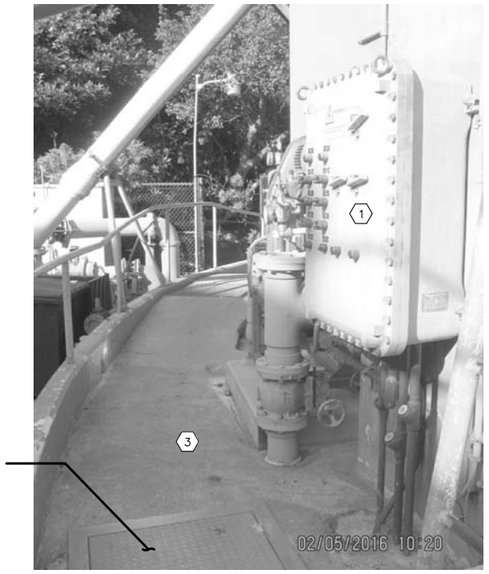

EXISTING RECYCLE PUMP CONTROLLER MODIFICATIONS (D)

SCALE: NTS

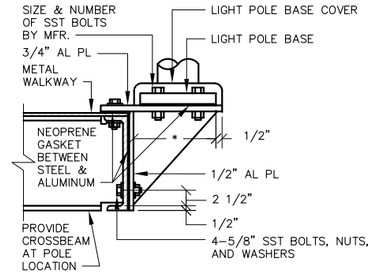

A SECTION-ALTERNATE "A"

SCALE: NTS.

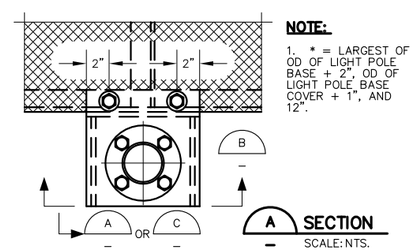

A SECTION

SCALE: NTS.

NOTE:

1. * = LARGEST OF OD OF LIGHT POLE BASE + 2", OD OF LIGHT POLE BASE COVER + 1", AND 12".

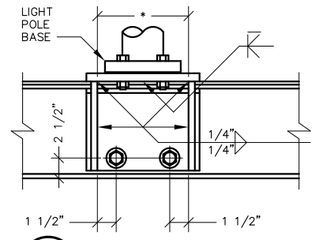

B ELEVATION

SCALE: NTS.

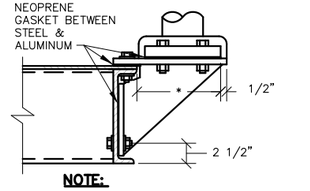

NOTE:

FOR ADDITIONAL INFORMATION, SEE ALTERNATE "A"

C SECTION-ALTERNATE "B"

SCALE: NTS.

STAIR-MOUNTED LIGHT POLE DETAIL (E)

SCALE: NTS

DIEP TAN NGUYEN — No. E-17809 — 5/31/17 — REGISTERED PROFESSIONAL ENGINEER — ELECTRICAL — STATE OF CALIFORNIA

11/18/16

0" 1" — VERIFY SCALES — BAR IS ONE INCH LONG ON FULL SIZE DRAWING. IF NOT ONE INCH LONG ON THIS DRAWING, ADJUST SCALES ACCORDINGLY

ENGINEERS, INC. Oakland, San Francisco, Orange County, CA

RMC water and environment

REV	DATE	BY	APVD	DESCRIPTION

DESIGNED	TP
DRAWN	LD
CHECKED	DN

SUBMITTED: MARK TAKEMOTO, RMC PROJECT ENGINEER CE-64369

APPROVED: STEVE CLARY, RMC ENGINEER CE-30318

SAUSALITO · MARIN CITY SANITARY DISTRICT

TREATMENT AND WET WEATHER FLOW UPGRADE

UTILITY WATER PUMP DETAIL, RECYCLE PUMP DETAIL AND PLC-6 MODIFICATIONS

DWG NO	E-32
SHEET NO	198 OF 226
PROJ NO	055-006
DATE	NOVEMBER 2016

FILENAME: 286F_E32 11-18-16 08:50am LocDo || XREFS: X-SMCSD-TBLK | MTakemoto-PE-stamp |<<--

Last Saved By: LocDo 11-11-16 10:47am

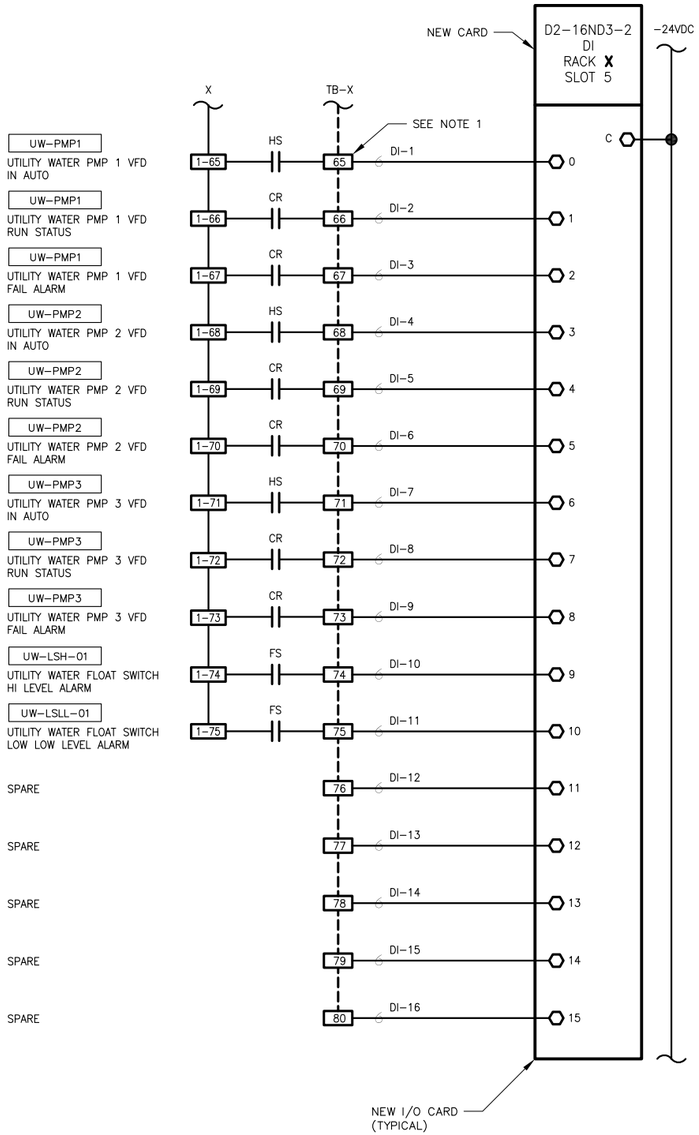

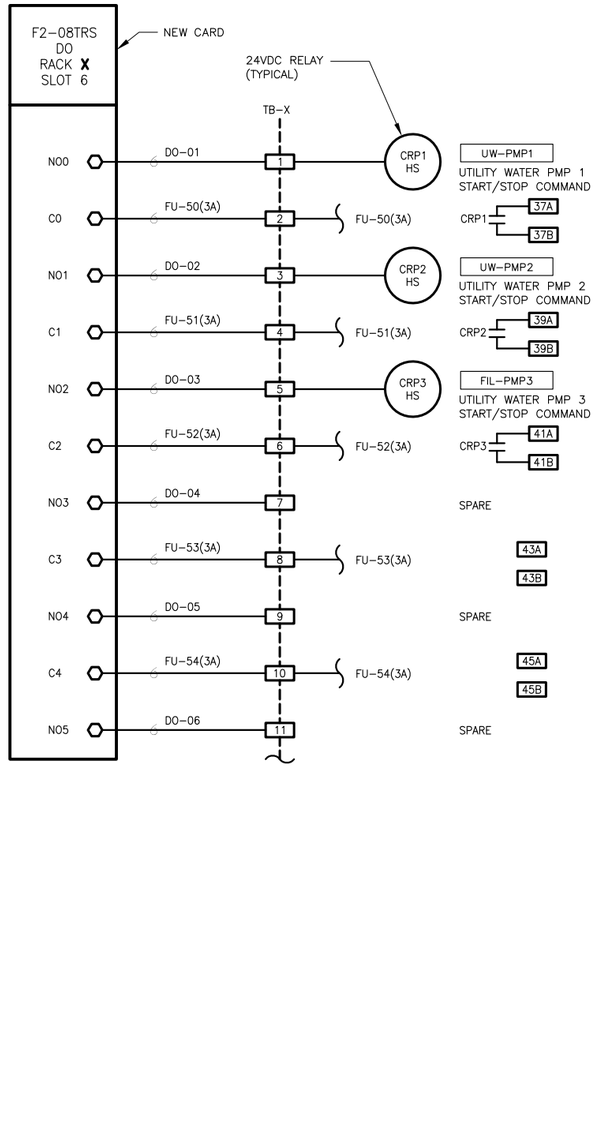

SHEET NOTES:

1. CONTRACTOR SHALL FIELD VERIFY EXACT SEQUENCE OF THE TERMINAL BLOCKS AND ASSIGN NEW TERMINAL NUMBERS IN CORRECT SEQUENCE DURING SHOP DRAWING SUBMITTAL.

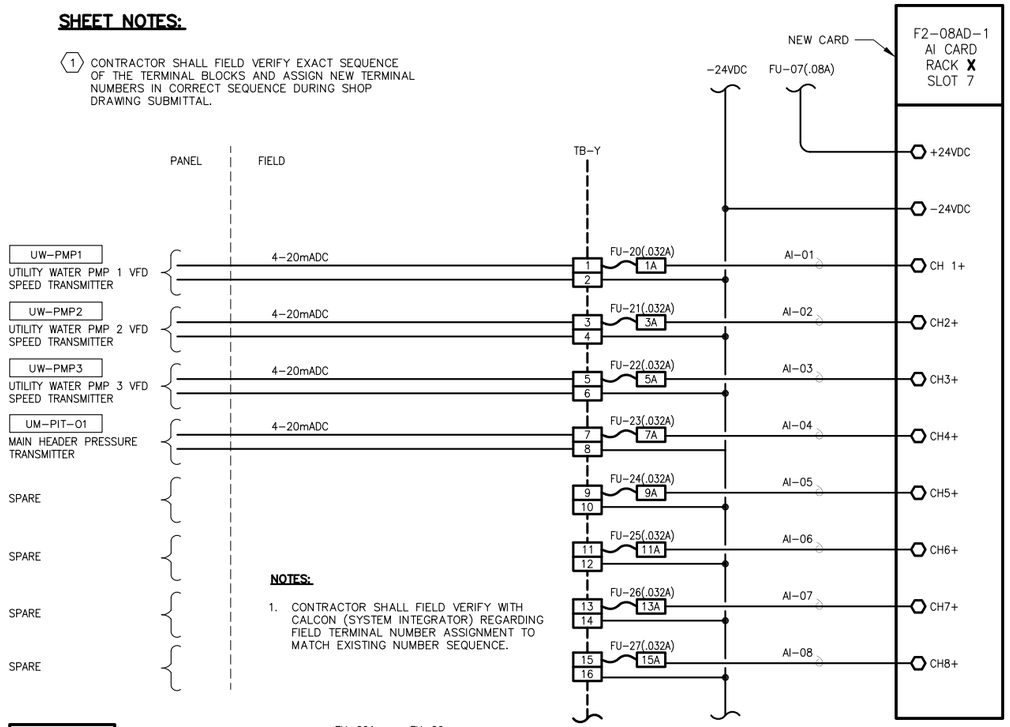

NOTES:

1. CONTRACTOR SHALL FIELD VERIFY WITH CALCON (SYSTEM INTEGRATOR) REGARDING FIELD TERMINAL NUMBER ASSIGNMENT TO MATCH EXISTING NUMBER SEQUENCE.

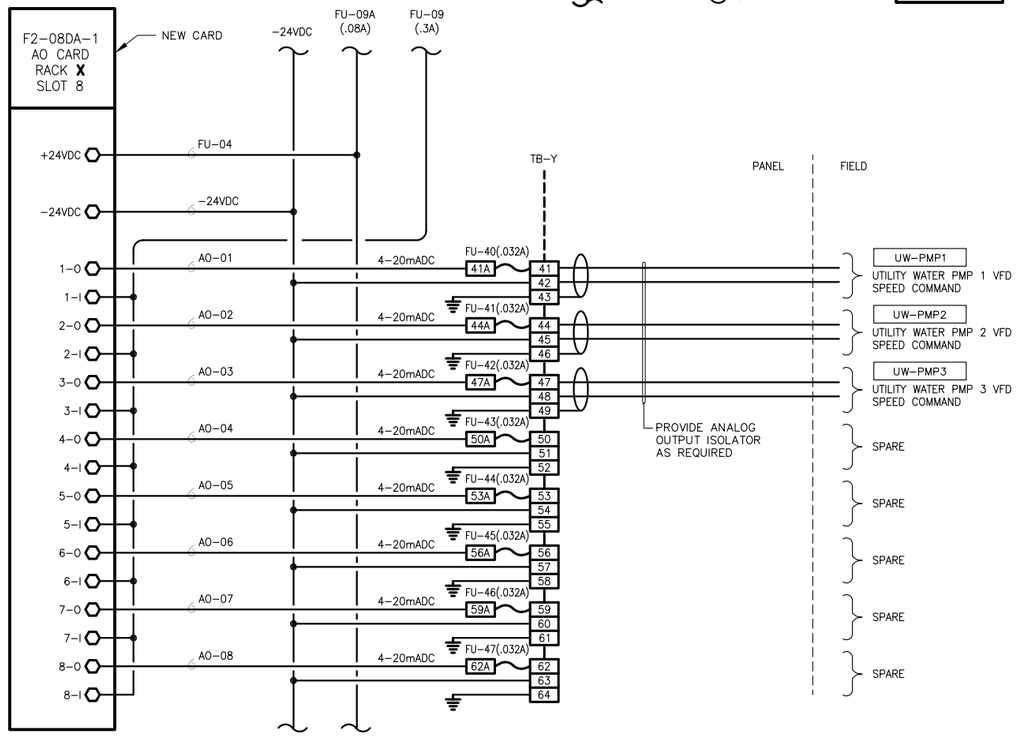

MAIN PLANT PLC WIRING DIAGRAMS (A) (1)

SCALE: NTS

FILENAME: 286F_E33 11-18-16 08:51am LocDo || XREFS: X-SMCSD-TBLK | MTakemoto-PE-stamp |<<--

REGISTERED PROFESSIONAL ENGINEER
DIEP TAN NGUYEN
No. E17008
ELECTRICAL
STATE OF CALIFORNIA
11/18/16

0" 1" — VERIFY SCALES — BAR IS ONE INCH LONG ON FULL SIZE DRAWING. IF NOT ONE INCH LONG ON THIS DRAWING, ADJUST SCALES ACCORDINGLY

ENGINEERS, INC. Oakland, San Francisco, Orange County, Ca.

RMC water and environment

REV	DATE	BY	APVD	DESCRIPTION
1				
2				
3				
4				
5				

DESIGNED	TP
DRAWN	LD
CHECKED	DN

SUBMITTED: MARK TAKEMOTO, RMC PROJECT ENGINEER CE-64369

APPROVED: STEVE CLARY, RMC ENGINEER CE-30318

SAUSALITO · MARIN CITY SANITARY DISTRICT

TREATMENT AND WET WEATHER FLOW UPGRADE

EXISTING MAIN PLANT PLC MODIFICATIONS

DWG NO	E-33
SHEET NO	199 OF 226
PROJ NO	055-006
DATE	NOVEMBER 2016

Last Saved By: LocDo 11-11-16 09:45am

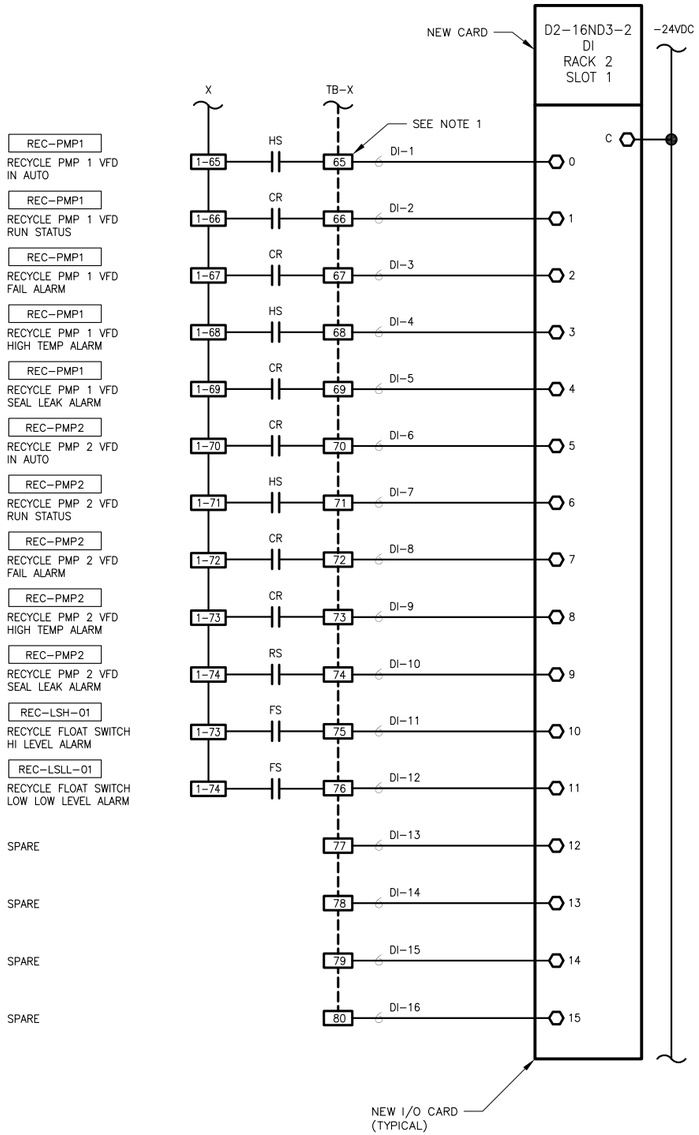

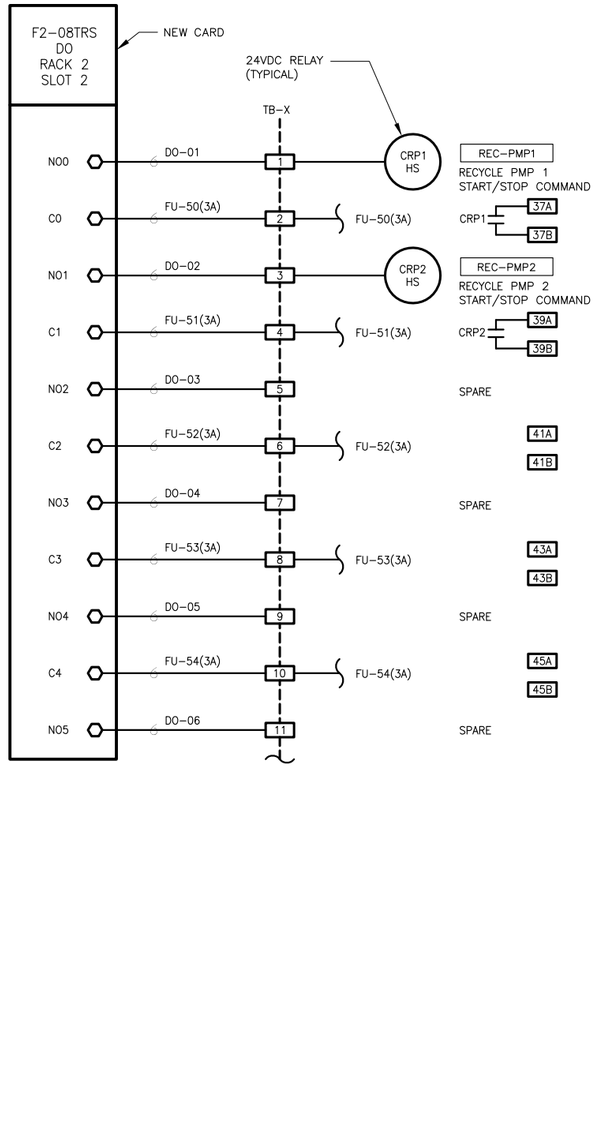

SHEET NOTES:

1. CONTRACTOR SHALL FIELD VERIFY EXACT SEQUENCE OF THE TERMINAL BLOCKS AND ASSIGN NEW TERMINAL NUMBERS IN CORRECT SEQUENCE DURING SHOP DRAWING SUBMITTAL.

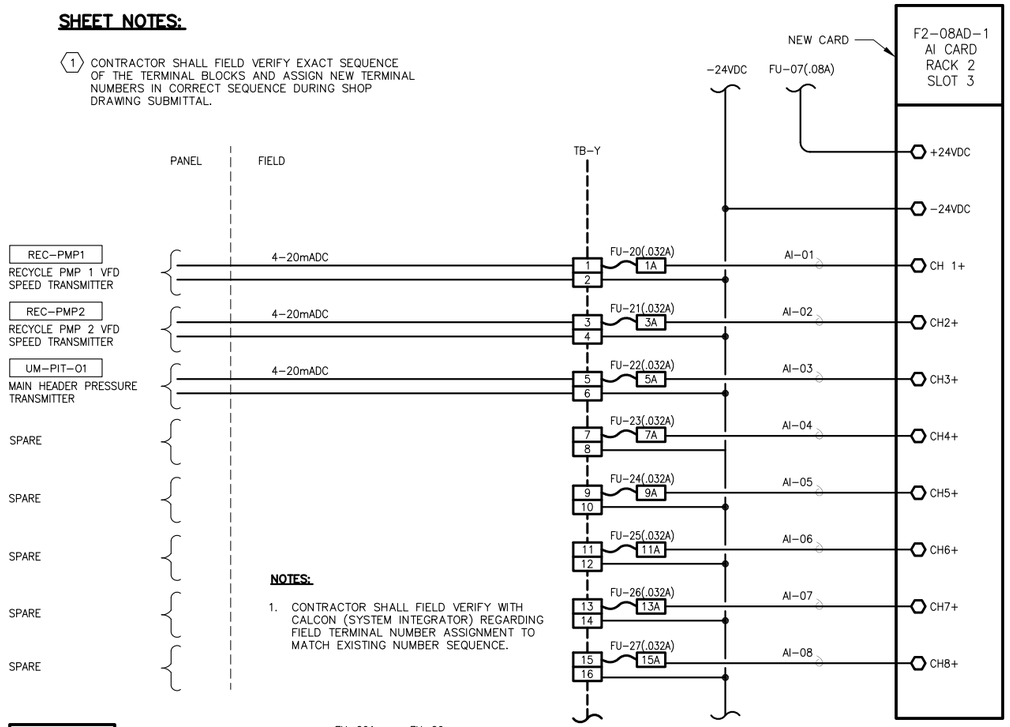

NOTES:

1. CONTRACTOR SHALL FIELD VERIFY WITH CALCON (SYSTEM INTEGRATOR) REGARDING FIELD TERMINAL NUMBER ASSIGNMENT TO MATCH EXISTING NUMBER SEQUENCE.

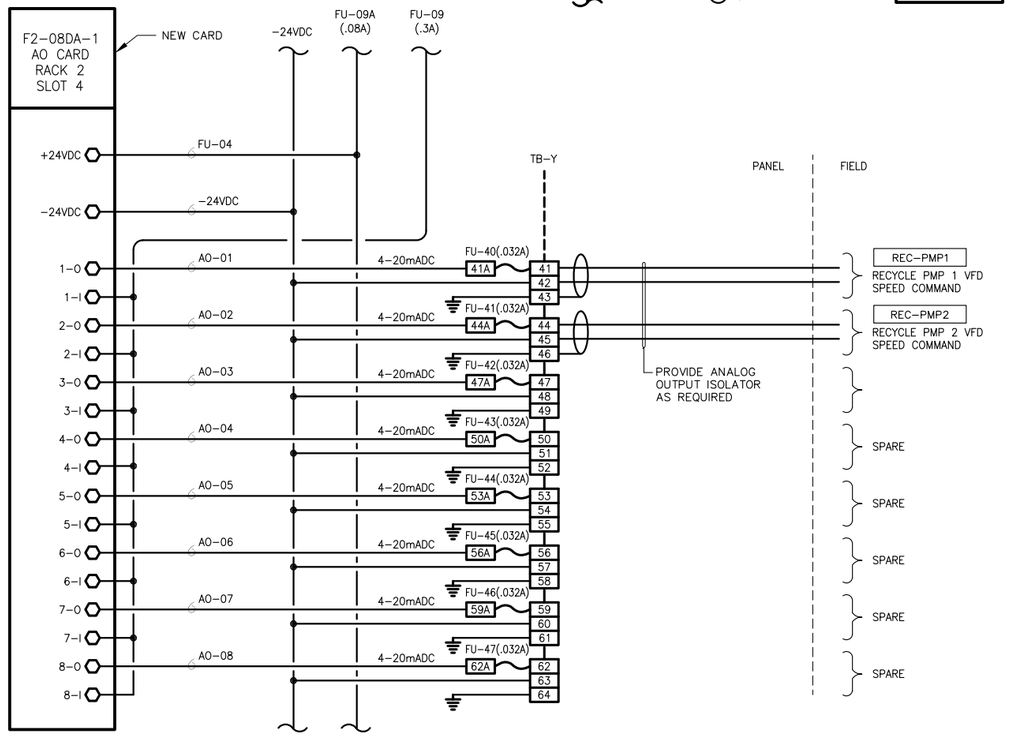

PLC-6 WIRING DIAGRAMS (A) (1)

SCALE: NTS

FILENAME: 286F_E34 11-18-16 08:51am LocDo || XREFS| X-SMCSD-TBLK | MTakemoto-PE-stamp |<<--

REGISTERED PROFESSIONAL ENGINEER — DIEP TAN NGUYEN — No. E17061 — 6/30/17 — ELECTRICAL — STATE OF CALIFORNIA

11/18/16

0" 1" — VERIFY SCALES — BAR IS ONE INCH LONG ON FULL SIZE DRAWING. IF NOT ONE INCH LONG ON THIS DRAWING, ADJUST SCALES ACCORDINGLY

ENGINEERS, INC. Oakland, San Francisco, Orange County, Ca.

RMC water and environment

REV	DATE	BY	APVD	DESCRIPTION
1				
2				
3				
4				
5				

DESIGNED	TP
DRAWN	LD
CHECKED	DN

SUBMITTED: MARK TAKEMOTO, RMC PROJECT ENGINEER CE-64369

APPROVED: STEVE CLARY, RMC ENGINEER CE-30318

SAUSALITO · MARIN CITY SANITARY DISTRICT

TREATMENT AND WET WEATHER FLOW UPGRADE

EXISTING PLC-6 MODIFICATIONS

DWG NO	E-34
SHEET NO	200 OF 226
PROJ NO	055-006
DATE	NOVEMBER 2016

Last Saved By: LocDo 11-11-16 09:45am

FILENAME: 286F_E100-1 | 11-18-16 | 09:00am | LocDo | XREFS:| X-SMCSD-TBLK | X-Treatment Plant Site Plan | X-SitePlan | X-Topo Survey new | 0055-006-M200-1 | X-Site | S-HEADWORKS-PLAN | 0055-006-M100-5 | S-TANK-PLAN | MTakemoto-PE-stamp |<<--

SCALE: 1"=10'
0 10 20 30
SCALE IN FEET

SHEET NOTES:

1. CONTRACTOR SHALL DISCONNECT AND REMOVE EXISTING POWER & CONTROL CIRCUITS OF THE EXISTING PUMPS PRIOR TO RECONNECTING NEW POWER & CONTROL CIRCUITS TO THE NEW PUMPS.
   RELOCATE EXISTING FLOAT SWITCHES AND RECONNECT THEM TO COMPLETE OPERATING PUMPING SYSTEM. ELEVATION OF THE FLOATS SHALL BE AS DIRECTED BY THE ENGINEER.
2. AT THIS LOCATION, THE EXISTING UTILITY WATERS PUMPS ARE REMOVED AND REPLACED WITH NEW AND SAMPLE PUMP IS TO BE RELOCATED TO NEW LOCATION. THE CONTRACTOR SHALL PROVIDE NEW POWER & CONTROL CONDUITS. SEE DETAILS ON DRAWING E-25.
3. THIS LIGHT FIXTURE IS A RECESSED LED LIGHT FIXTURE. SEE DETAIL 594A ON DRAWING E-20.
4. THIS LIGHT FIXTURE IS A STEM-MOUNTED LED LIGHT FIXTURE MOUNTED ON THE EXISTING CONCRETE RETAINING WALL. SEE DETAIL 594B ON DRAWING E-20.
5. POLE MOUNTED LED LIGHT FIXTURE TYPE "A". SEE FIXTURE SCHEDULE ON DRAWING E-20

(E) PRIMARY CLARIFIER No. 1

NEW PRIMARY CLARIFIER No. 2
SEE DRAWING E200-1 FOR DETAILS

NEW HEADWORKS
SEE DRAWING E100 SERIES FOR DETAILS

TRUCK TURNTABLE

FIXED FILM REACTOR PUMPS. SEE DRAWING E300-1 FOR DETAILS

EXISTING CONTROL BUILDING

EXISTING UTILITY WATER PUMPS TO BE REPLACED WITH NEW.

EXISTING RECYCLE PUMPS REPLACED WITH NEW

EXISTING PLC-6 LOCATED INSIDE BUILDING. SEE DETAIL C/E-32.

EXISTING MCC-P1 LOCATED INSIDE BUILDING. SEE DETAIL B/E-31.

STAINLESS STEEL PULL BOX (TYP. FOR 2)

EXISTING ELECTRICAL SWITCHBOARD TO REMAIN

P-400N

P-400N (UNDERGROUND)

P-400N (EMBEDDED IN CONCRETE WALL)

MCC-HW

ELECTRICAL ROOM (BELOW) SEE DRAWINGS E100-5 AND E100-7 FOR DETAILS

(N)

2" SPARE CONDUIT

NEW TELEPHONE PULL BOX

EXISTING PG&E PRIMARY FEEDER PULL BOX SEE DETAIL A/E-22

SEE DRAWING E100-2 FOR WORK REQUIRED FOR THIS AREA

RECESSED LED LIGHT (TYPICAL FOR 6). SEE DETAIL AT F 7 (TYPICAL FOR 6)

LOW WATTAGE LED LIGHT (TYPICAL FOR 6). SEE DETAIL AT G 12.5 (TYPICAL FOR 6)

(36"PVC RISERS)

NEW FILTERS
SEE DRAWINGS E400-1 FOR DETAILS

EXISTING GENERATOR BUILDING
SEE DRAWINGS E-25 AND E-26 FOR DETAILS

SHIPPING CONTAINER

FUTURE GM/BOARD OFFICE BUILDING

OFFICE BUILDING

5#12-3/4"C

CONNECT TO AVAILABLE 20A CIRCUIT IN EXISTING PANELBOARD IN OFFICE 2#12, #12 GND-3/4"C

TERMINATION PULL BOX

HAND RAILS

REMOVABLE BOLLARDS

PG&E SERVICE TRANSFORMER RELOCATED. SEE DRAWING E-22 AND E-24 FOR DETAILS

ACCESS ROAD
SEE NOTE 11 ON DRAWING E-22

MACHINE SHOP

RIGHT OF WAY LINE

EXISTING POLE MOUNTED LIGHT (TYP)

PLAN
1"=10'

DIGESTER No. 1 | DIGESTER No. 2 | DIGESTER No. 3 | DIGESTER No. 4 | DIGESTER No. 5 | DIGESTER No. 6

STATE OF CALIFORNIA — DIEP TAN NGUYEN — No. E17008 — 6/30/17 — ELECTRICAL — PROFESSIONAL ENGINEER
11/18/16

0" 1" — VERIFY SCALES — BAR IS ONE INCH LONG ON FULL SIZE DRAWING. IF NOT ONE INCH LONG ON THIS DRAWING, ADJUST SCALES ACCORDINGLY

ENGINEERS, INC. Oakland, San Francisco, Orange County, CA

RMC water and environment

REV	DATE	BY	APVD	DESCRIPTION

DESIGNED	TP
DRAWN	LD
CHECKED	DN

SUBMITTED: MARK TAKEMOTO, RMC PROJECT ENGINEER CE-64369
APPROVED: STEVE CLARY, RMC ENGINEER CE-30318

SAUSALITO · MARIN CITY SANITARY DISTRICT

TREATMENT AND WET WEATHER FLOW UPGRADE

OVERALL SITE PLAN

DWG NO	E100-1
SHEET NO	201 OF 226
PROJ NO	055-006
DATE	NOVEMBER 2016

Last Saved By: LocDo 11-18-16 08:58am

SHEET NOTES:

1. PER CURRENT NFPA 820 AND NEC, AREA AROUND THE EXISTING DIGESTER WITHIN 5' FROM THE WALL OF THE DIGESTER SHALL BE CLASSIFIED AS CLASS I DIVISION 1 HAZARDOUS LOCATION. FOR AREA 5' FROM CLASS I DIVISION 1, AREA SHALL BE CLASS I DIVISION 2 HAZARDOUS LOCATION. ALL ELECTRICAL DEVICE AND EQUIPMENT LOCATED IN THIS AREA SHALL BE SUITABLE FOR USE IN SUCH LOCATION. CONDUITS ENTERING OR LEAVING THIS AREA SHALL BE PROVIDED WITH "EYS" SEALS.
2. PER CURRENT NFPA 820 AND NEC, THIS PULL BOX IS LOCATED IN CLASS I DIVISION 1 HAZARDOUS LOCATION, AND THUS SHALL BE CLASSIFIED AND SUITABLE FOR CLASS I DIV 1. THE BOX SHALL BE CAST IRON, EXPLOSION PROOF, INSIDE DIMENSIONS 12"X12"X6" MINIMUM TO ACCOMMODATE ONE 2" CONDUIT INCOMING AND ONE 2" CONDUIT OUTGOING. INSTALL PULL BOX AS HIGH AS POSSIBLE.
3. THIS PULL BOX SHALL BE STAINLESS STEEL NEMA 4X PULL BOX 12" X 12" X 8".
4. THESE CONDUITS SHALL BE INSTALLED ON THE EXISTING PIPING SUPPORT AS PER DETAIL D ON DRAWING E-22. THEY SHALL BE PVC COATED RIGID GALVANIZED STEEL.
5. ADDITIONAL CONDUIT SUPPORTS SHALL BE PROVIDED FOR THESE CONDUITS AT THIS AREA. CONDUIT SUPPORTS SHALL BE RIGID GALVANIZED STEEL (RGS) UNISTRUT CHANNELS PROPERLY FASTENED TO EXISTING STRUCTURE OR CONCRETE GROUND FLOOR WITH STAINLESS STEEL ANCHOR BOLTS.
6. ROUTE NEW 2"C FOR THE PHONE SERVICE ALONG EXISTING FENCE AND EXISTING UNISTRUT CHANNELS. PROVIDE ADDITIONAL SUPPORTS AS REQUIRED.
7. SEE DRAWING E-25 FOR DETAILS OF REQUIRED WORK IN THIS AREA.
8. THESE UNDERGROUND PORTIONS OF THE CONDUITS SHALL BE PVC SCHEDULE 80.
9. CORE DRILL EXISTING CONCRETE SLAB AS REQUIRED FOR INSTALLATION OF NEW CONDUIT. SEAL AND CAULK AROUND CONDUIT WITH SEALING COMPOUND.
10. THIS PORTION OF EXISTING FEEDERS TO EXISTING ATS SHALL REMAIN.
11. EXCAVATION IS REQUIRED AT THIS AREA FOR REROUTING OF POWER CONDUIT (1-4") AND PHONE CONDUIT (2"). THERE ARE EXISTING UNDERGROUND UTILITIES WHICH SHALL BE FIELD VERIFIED PRIOR TO EXCAVATION TO AVOID DAMAGES TO THEM. SEE DRAWING E-22 FOR DETAILED REQUIREMENTS.
12. THESE EXISTING PORTIONS OF POWER AND PHONE CONDUITS SHALL BE KEPT FUNCTIONAL UNTIL ALTERNATE CONDUIT ROUTES HAVE BEEN INSTALLED AND READY FOR SWITCHOVER.
13. AFTER SUCCESSFUL COMPLETION OF THE PROJECT, THIS UNDERGROUND PORTION OF THE FEEDER SHALL BE ABANDONED IN PLACE.
14. AFTER SUCCESSFUL COMPLETION OF THE PROJECT, THIS EXPOSED PORTION OF THE PHONE CONDUIT SHALL BE REMOVED.
15. FURNISH AND INSTALL NEW 3" PVC DRAIN LINE FROM EXISTING PULL BOX TO EXISTING CATCH BASIN AS SHOWN IF IT HAS BEEN VERIFIED THAT THE EXISTING PULL BOX DOES NOT HAVE A DRAIN LINE. THE NEW DRAIN LINE SHALL PENETRATE AT THE INVERT OF THE PG&E PULL BOX AND SLOPE AT A MINIMUM 1% DOWN TO THE CATCH BASIN. PENETRATIONS SHALL BE CORE DRILLED AND SEALED WITH NON-SHRINKABLE GROUT AROUND THE PVC PIPE. IF THE DRAIN LINE EXISTS, UNCLOG IT AND PROVIDE CREDIT FOR NOT INSTALLING NEW DRAIN LINE.
16. THIS TEMPORARY POWER CABLE ROUTE SHALL BE FIELD VERIFIED BY THE CONTRACTOR PRIOR TO ACTUAL INSTALLATION DURING SWITCH OVER OPERATION.
17. INSTALL PHONE CONDUITS (2-2") ON TOP, POWER CONDUIT (2-3") BELOW. THESE FOUR CONDUITS SHALL BE SUPPORTED BY EXISTING SUPPORT POSTS AND NEW ADDITIONAL SUPPORTS AS REQUIRED.
18. THE ENTIRE LENGTH OF THE TREATMENT PLANT'S ACCESS ROAD SHALL REMAIN ACCESSIBLE OUTSIDE OF CONSTRUCTION HOURS. DURING CONSTRUCTION, TRENCH PLATES SHALL BE AVAILABLE TO MINIMIZE TIME ACCESS IS RESTRICTED TO DISTRICT OPERATORS. ALL WORK PLANS RESULTING IN RESTRICTED ACCESS, OR ACCESS DELAYS, SHALL BE SUBMITTED TO THE DISTRICT IN ADVANCE AND SHALL INCLUDE A SCHEDULE AND TIMELINE FOR APPROVAL. THIS ACCESS ROAD SUPPORTS SOLIDS PROCESSING AND EMERGENCY PLANT ACCESS.
19. EXISTING PULL BOXES SHALL BE ABANDONED IN PLACE, AND SHALL BE FILLED WITH CONCRETE. RESURFACE ROAD AS REQUIRED.
20. CONTRACTOR SHALL REMOVE THIS EXISTING DIESEL FUEL TANK AND ASSOCIATED FUEL PIPING AFTER COMPLETE INSTALLATION OF NEW FUEL TANK LOCATED ON THE BASIN DECK NEAR TRUCK TURN TABLE.
21. SEE DRAWING E100-1 FOR DETAIL OF THIS FEEDER P-400N.
22. DISCONNECT AND REMOVE THIS EXISTING POLE MOUNTED LIGHT FIXTURE.

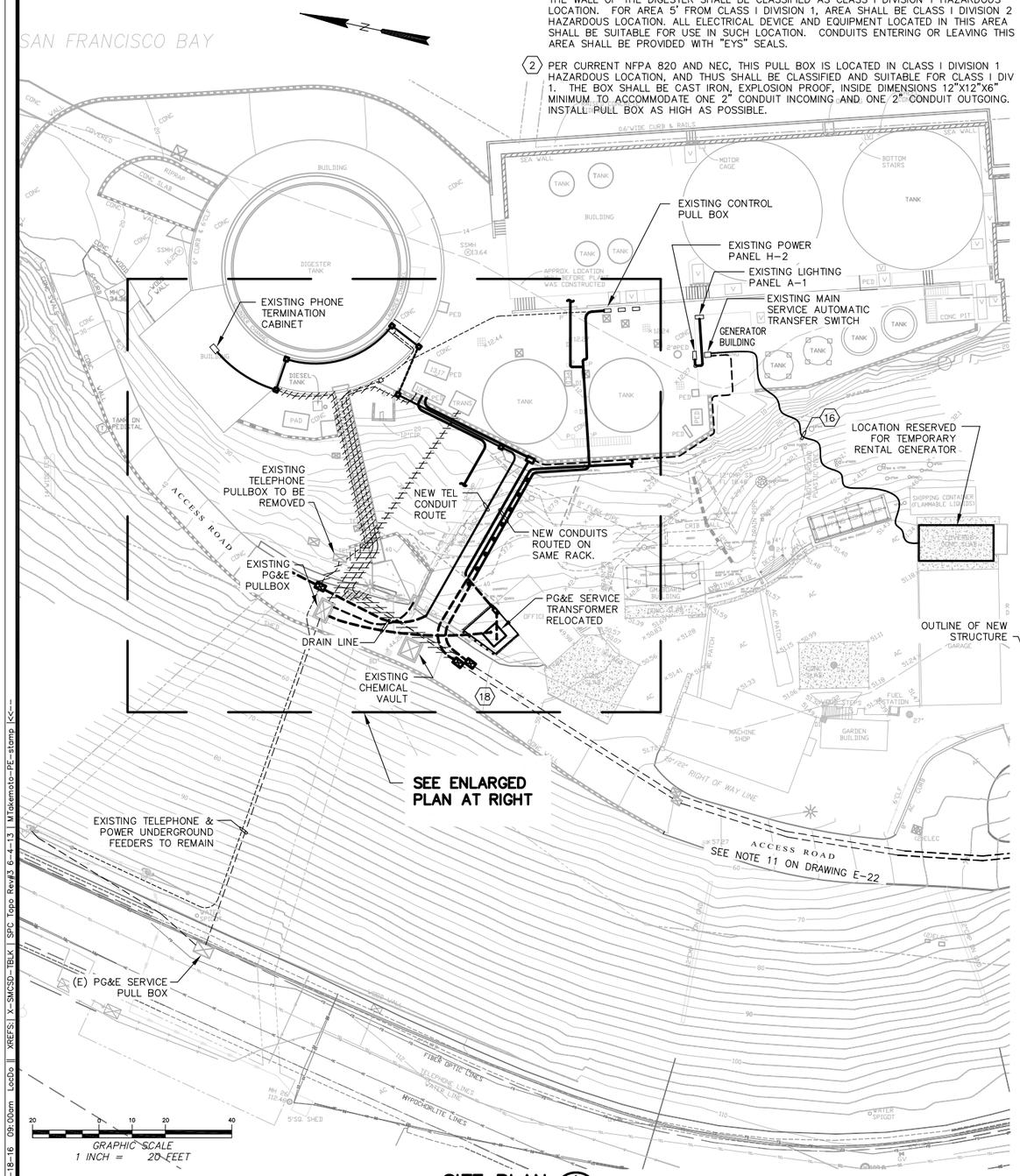

SITE PLAN (A)
SCALE: 1"=20'

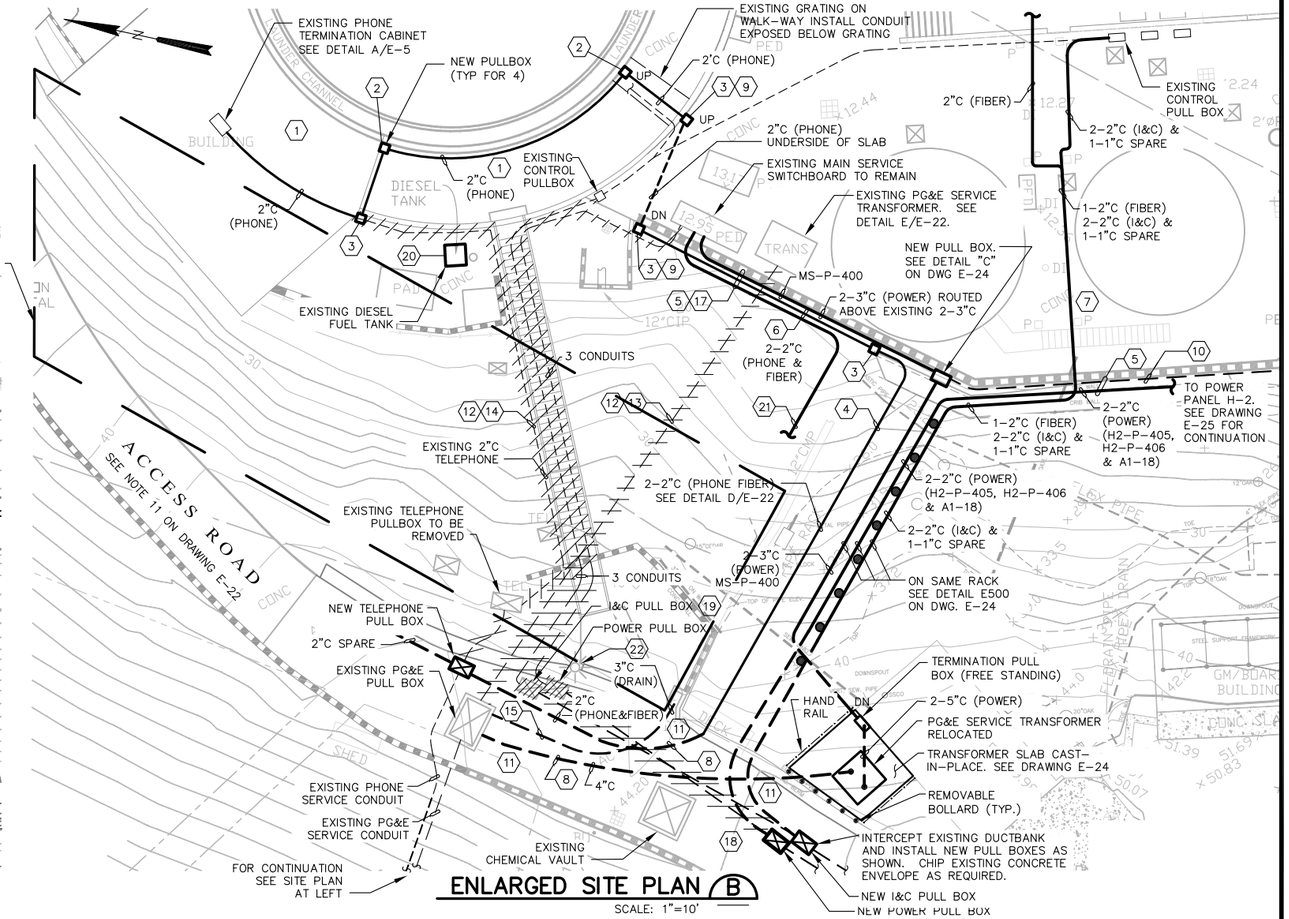

ENLARGED SITE PLAN (B)
SCALE: 1"=10'

REGISTERED PROFESSIONAL ENGINEER — DIEP TAN NGUYEN — No. E17008 — 6/30/17 — ELECTRICAL — STATE OF CALIFORNIA
11/18/16

0" 1" — VERIFY SCALES — BAR IS ONE INCH LONG ON FULL SIZE DRAWING. IF NOT ONE INCH LONG ON THIS DRAWING, ADJUST SCALES ACCORDINGLY

ENGINEERS, INC. Oakland, San Francisco, Orange County, Ca. | RMC water and environment

REV	DATE	BY	APVD	DESCRIPTION

DESIGNED	TP
DRAWN	LD
CHECKED	DN

SUBMITTED: MARK TAKEMOTO, RMC PROJECT ENGINEER CE-64369
APPROVED: STEVE CLARY, RMC ENGINEER CE-30318

SAUSALITO • MARIN CITY SANITARY DISTRICT

TREATMENT AND WET WEATHER FLOW UPGRADE

HEADWORKS ELECTRICAL PARTIAL ENLARGED SITE PLAN

DWG NO E100-2
SHEET NO 202 OF 226
PROJ NO 055-006
DATE NOVEMBER 2016

FILENAME: 286F_E100-2 | 11-18-16 09:00am LocDo | XREFS: | X-SMCSD-TBLK | SPC Tapo Rev#3 6-4-13 | MTakemoto-PE-stamp |<<--

Last Saved By: LocDo 11-11-16 09:48am

FILENAME: 286F_E100-3 | 11-18-16 | 09:00am | LocDo | XREFS: | X-SMCSD-TBLK | X-SitePlan | X-Treatment Plant site plan | X-Topo Survey new | S-HEADWORKS-PLAN | 0055-006-M100-3 | 0055-006-M100-5 | X-Sect-Line | MTakemoto-PE-stamp |<<--

SHEET NOTES:

1. ALL CONDUITS INSTALLED ON THIS PLAN SHALL BE EMBEDDED IN THE CONCRETE FLOOR SLAB.
2. LOCATIONS OF DISCONNECT SWITCHES SHALL BE ADJUSTED ACCORDINGLY IN THE FIELD AS PER ACTUAL FIELD CONDITIONS AND SHALL HAVE ACCESS AS REQUIRED BY NEC.
3. LOCATIONS OF LEVEL TRANSMITTERS, EMERGENCY SHUTDOWN STATIONS ETC. SHALL BE PROPERLY LOCATED WITH FRONT ACCESS.
4. THIS AREA IS CLASSIFIED AS CLASS 1 DIV2 HAZARDOUS LOCATION. ANY ELECTRICAL EQUIPMENT INSTALLED IN THIS AREA AND WITHIN 10' ENVELOPE SHALL BE SUITABLE FOR INSTALLATION IN SUCH CLASSIFIED LOCATION.
5. REFER TO CONTROL PANEL BLOCK DIAGRAM SHOWN ON DRAWING E-9 FOR DEVICES AND INSTRUMENTS FURNISHED BY THE PACKAGED EQUIPMENT SUPPLIER. SOME OF THESE DEVICES AND INSTRUMENTS ARE MOUNTED ON THE MECHANISM, SOME ARE SHIPPED LOOSE. ALL SHALL BE INSTALLED AND WIRED PER APPROVED SHOP DRAWINGS.
6. REFER TO CONTROL PANEL BLOCK DIAGRAM SHOWN ON DRAWING E-7 FOR DEVICES AND INSTRUMENTS FURNISHED BY THE PACKAGED EQUIPMENT SUPPLIER. THESE DEVICES AND INSTRUMENTS ARE MOUNTED ON THE MECHANISM AND SHALL BE WIRED PER APPROVED SHOP DRAWINGS.
7. ALL CONDUITS WITH CIRCUITS FED BY MCC-HW SHALL HAVE TAGS WITH PREFIX "MCC-HW".
8. SEE MECHANICAL DRAWING FOR DIESEL FUEL PIPING FROM THIS TANK TO EXISTING GENERATOR BUILDING.
9. SEE DETAIL A/E-28 FOR ANTENNA MOUNTING DETAIL.
10. THERE ARE TWO 1"C REQUIRED. THE POWER CONDUIT SHALL HAVE 2#12, #12 GND FOR POWER CIRCUIT LP1-31. THE CONTROL CONDUIT SHALL HAVE 2#14.

PRIMARY CLARIFIER #1

PRIMARY CLARIFIER #2

N

A1 2/157 DN

SPIRAL SCREENS CONTROL PANEL SC-EQP1/2-LCP-01

GRIT WASHER CONTROL PANEL GC-EQP1-LCP-01

P-401 CC101 I102 P-409 CC107 I103

P-424 NEMA 4X 8"x8"x12" SS MOUNTED 3' ABOVE FINISHED GRADE

GRIT HYDRAULIC SYSTEM GRT-EQP1

P-401A P-401B P-401C

E330 TYP

E 150

LP1-2

SC-GAT6

SCREENING SC-EQP1 (5)

SCREENING SC-EQP2 (5)

(4)

P-403 CC103

LEVEL SENSOR HW-FLW1-LE-02 I107

TO SPIRAL SCREENS CTRL PNL

LEVEL SENSOR SC-EQP1-LE-01

LEVEL SENSOR SC-EQP1-LE-01

(9) CP-HW RADIO ANTENNA

ANTENNA COAXIAL CABLE IN 1"C DOWN TO CP-HW IN MCC ROOM BELOW

SC-GAT3

LP1-34

I117

I119

CC-102

P-402

LP1-2

AUTOMATIC REFRIGERATED SAMPLER HW-EQP1

CC122 VIA LIGHTING PANEL LP1 CIRCUIT No. 22

SOLENOID VALVE EQ1-TRS1-SVLV01-01

CONTACT SWITCH

CC138

18" PARSHALL FLUME MHA-EQP2

I106

LEVEL SENSOR HW-FLW1-LE-01

EQUALIZATION GATE No. 3 EQ-GAT3

I118 P-104 CC104

EQUALIZATION GATE No. 1 EQ-GAT1

CC136

EQUALIZATION GATE No. 2 EQ-GAT2

CC137

E330 TYP E345 TYP

LEVEL TRANSMITTER EQP1-LIT-01

LEVEL TRANSMITTER EQP2-LIT-01

LP1-8

I108 I109

LEVEL SENSOR CABLE IN 1"C

P-409A P-409B P-409C

FLOAT SWITCH EQ1-LSHH-01

FLOAT SWITCH EQ2-LSHH-01

LEVEL SENSOR EQP1-LE-01 (SEE DETAIL I336/TYP ON DWG I-4)

CC127

CC128

LEVEL SENSOR EQP2-LE-01 (SEE DETAIL I336/TYP ON DWG I-4)

MHA-EQP1

E508 TYP

CONTROL PANEL MHA-EQP1-LCP-01

A 157 (TYP. UON)

CC133 P-417

EMERGENCY EYEWASH ALARM PANEL LOCATED BELOW. SEE DRAWING E100-5

I116

EMERGENCY EYEWASH ALARM PANEL FOR DIESEL TANK AREA.

(10)

CC132

LP1-20

(8)

PROTECTION POST (TYPICAL)

E527 TYP

MHA-SLG-PEQP-1

MHA-SLG-PEQP-2

TRUCK TURNTABLE MHA-HEQP (6) (TYP.)

TIPPING TROUGHS CONTACT SWITCH (TYP FOR 3)

CONTACT SWITCH

A1 2/157

SOLENOID VALVE EQ2-TRS2-SVLV01-01

CC125

SOLENOID VALVE EQ2-TRS1-SVLV02-01

CC123 AND CC125 VIA LIGHTING PANEL CIRCUIT No. 24

PLAN (2)(3)
1/4"=1'-0"

REGISTERED PROFESSIONAL ENGINEER DIEP TAN NGUYEN ELECTRICAL STATE OF CALIFORNIA 11/18/16

0" 1" VERIFY SCALES — BAR IS ONE INCH LONG ON FULL SIZE DRAWING. IF NOT ONE INCH LONG ON THIS DRAWING, ADJUST SCALES ACCORDINGLY

ENGINEERS, INC. Oakland, San Francisco, Orange County, Ca

RMC water and environment

REV	DATE	BY	APVD	DESCRIPTION

DESIGNED	TP
DRAWN	LD
CHECKED	DN

SUBMITTED: MARK TAKEMOTO, RMC PROJECT ENGINEER CE-64369

APPROVED: STEVE CLARY, RMC ENGINEER CE-30318

SAUSALITO · MARIN CITY SANITARY DISTRICT

TREATMENT AND WET WEATHER FLOW UPGRADE

HEADWORKS/GRITS & EQ BASIN TOP PLAN POWER AND SIGNAL

DWG NO	E100-3
SHEET NO	203 OF 226
PROJ NO	055-006
DATE	NOVEMBER 2016

Last Saved By: LocDo 11-11-16 11:29am

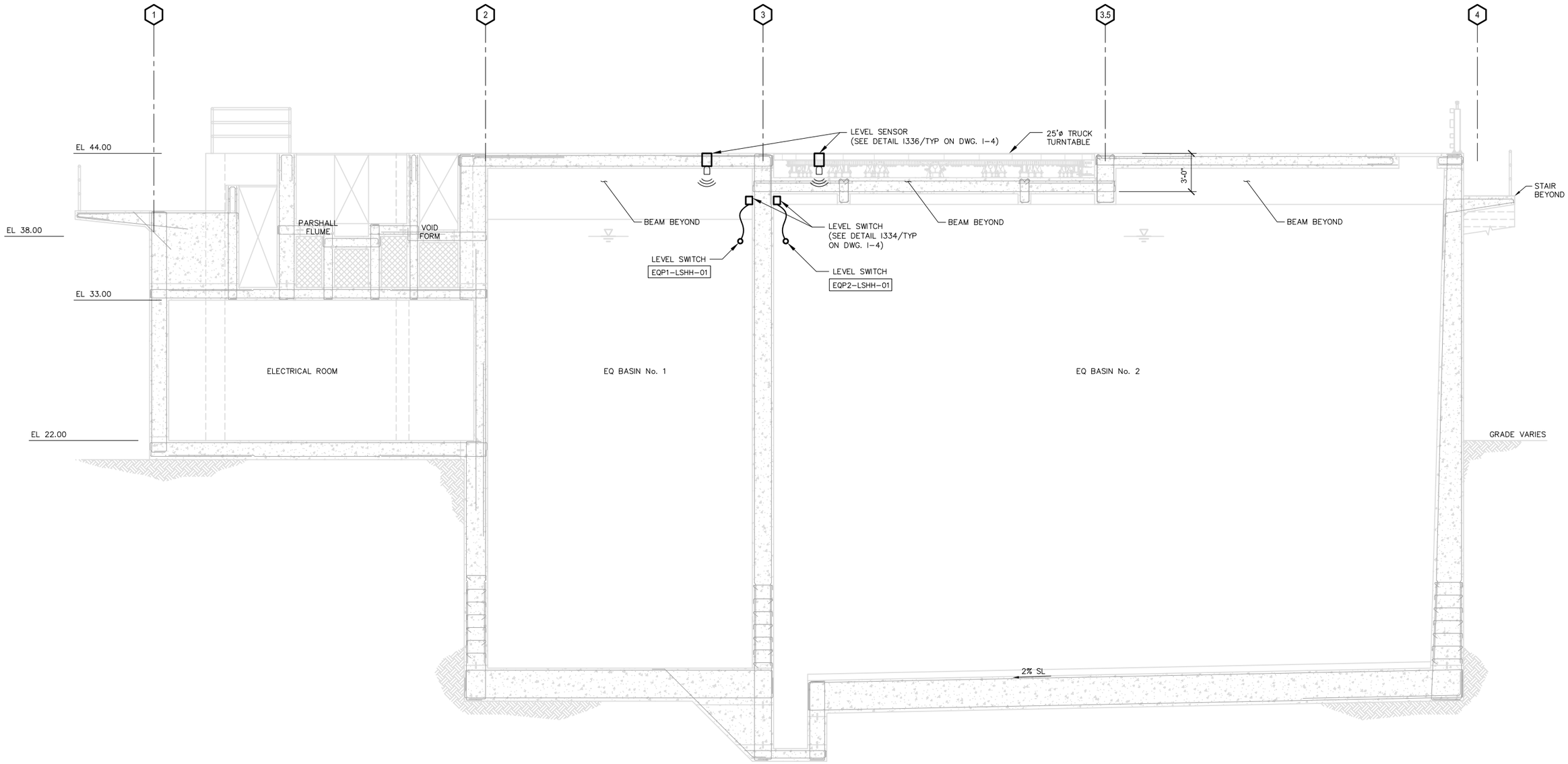

SECTION A

SCALE: 1/4"=1'-0"

FILENAME: 286F_E100-4 11-18-16 09:00am LocDo || XREFS: | X-SMCSD-TBLK | S-HEADWORKS-SECT | MTakemoto-PE-stamp |<<--

REGISTERED PROFESSIONAL ENGINEER DIEP TAN NGUYEN No. E17008 6/30/17 ELECTRICAL STATE OF CALIFORNIA

11/18/16

0" 1" — VERIFY SCALES — BAR IS ONE INCH LONG ON FULL SIZE DRAWING. IF NOT ONE INCH LONG ON THIS DRAWING, ADJUST SCALES ACCORDINGLY

ENGINEERS, INC. Oakland, San Francisco, Orange County, Ca

RMC water and environment

REV	DATE	BY	APVD	DESCRIPTION
1				
2				
3				
4				
5				

DESIGNED	TP
DRAWN	LD
CHECKED	DN

SUBMITTED: MARK TAKEMOTO, RMC PROJECT ENGINEER CE-64369

APPROVED: STEVE CLARY, RMC ENGINEER CE-30318

SAUSALITO · MARIN CITY SANITARY DISTRICT

TREATMENT AND WET WEATHER FLOW UPGRADE

HEADWORKS/GRIT & EQ BASIN CROSS SECTION DETAIL

DWG NO E100-4
SHEET NO 204 OF 226
PROJ NO 055-006
DATE NOVEMBER 2016

Last Saved By: LocDo 11-11-16 09:49am

SHEET NOTES:

1. AREA FROM WALL OF DIGESTER TO 5' SHALL BE CLASS 1 DIVISION 1 HAZARDOUS LOCATION. AREA 5' BEYOND CLASS 1 DIVISION 1. AREA SHALL BE CLASS 1 DIVISION 2 HAZARDOUS LOCATION. EQUIPMENT SHALL BE LOCATED BEYOND 10' ENVELOPE IF POSSIBLE OTHERWISE THEY SHALL BE RATED FOR SUCH HAZARDOUS LOCATION.
2. FIXTURE TYPE C INSTALLED BELOW WALKWAY. TYPICAL FOR 3.
3. REFER TO MECHANICAL DRAWINGS M-100 SERIES FOR EXACT LOCATIONS OF EQUIPMENT AND DEVICES REQUIRING POWER AND OR CONTROLS.

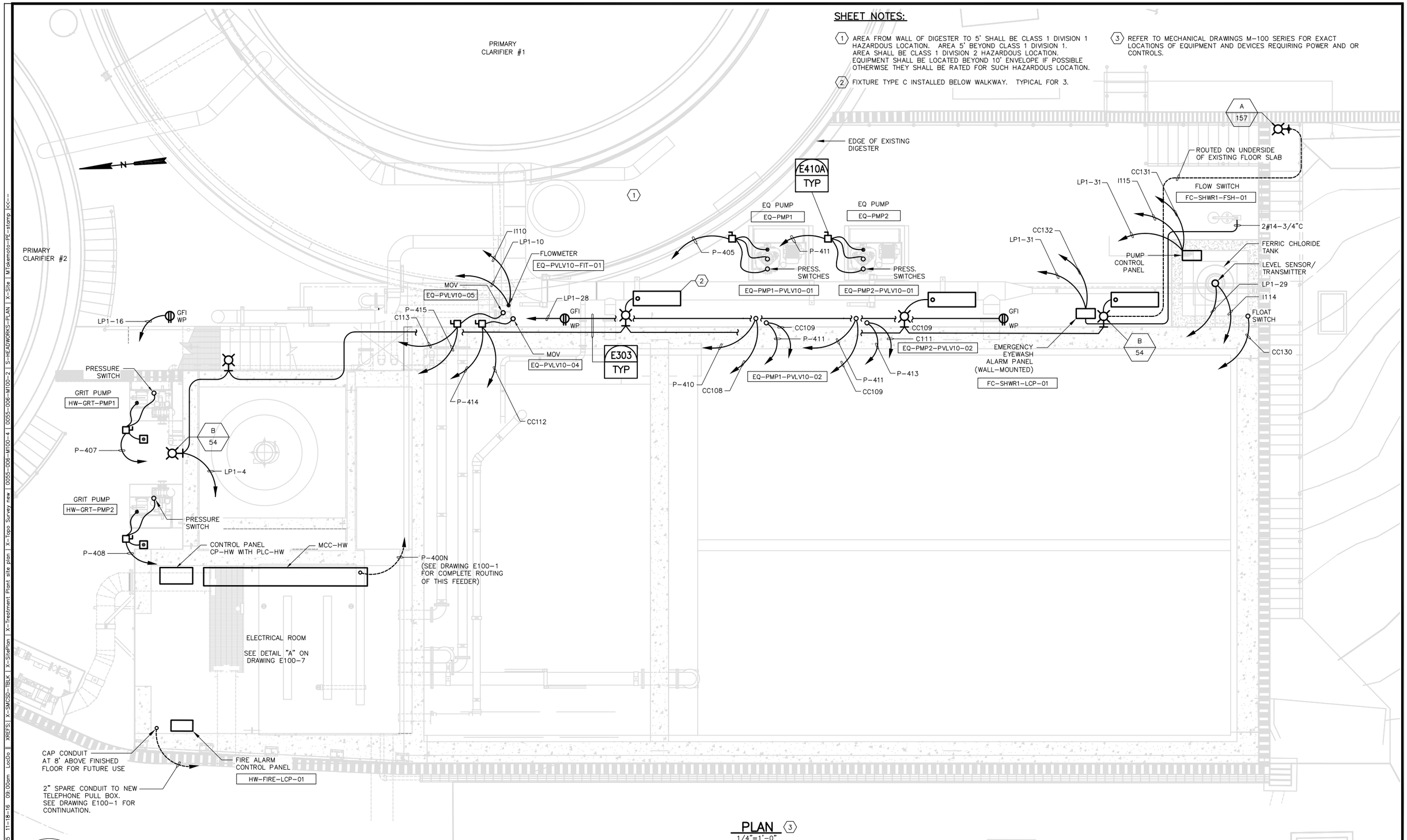

PLAN 3
1/4"=1'-0"

FILENAME: 286F_E100-5 11-18-16 09:00am LocDo || XREFS: | X-SMCSD-TBLK | X-SitePlan | X-Treatment Plant site plan | X-Topo Survey new | 0055-006-M100-4 | 0055-006-M100-2 | S-HEADWORKS-PLAN | X-Site | MTakemoto-PE-stamp |<<--

REGISTERED PROFESSIONAL ENGINEER DIEP TAN NGUYEN No. E10080 Exp. 6/30/17 ELECTRICAL STATE OF CALIFORNIA
11/18/16

0" 1"
— VERIFY SCALES —
BAR IS ONE INCH LONG ON FULL SIZE DRAWING. IF NOT ONE INCH LONG ON THIS DRAWING, ADJUST SCALES ACCORDINGLY

ENGINEERS, INC.
Oakland, San Francisco, Orange County, CA

RMC water and environment

REV	DATE	BY	APVD	DESCRIPTION
△				
△				
△				
△				
△				

DESIGNED	TP
DRAWN	LD
CHECKED	DN

SUBMITTED: MARK TAKEMOTO
RMC PROJECT ENGINEER CE-64369

APPROVED: STEVE CLARY
RMC ENGINEER CE-30318

SAUSALITO • MARIN CITY SANITARY DISTRICT

TREATMENT AND WET WEATHER FLOW UPGRADE

HEADWORKS/GRIT & EQ BASIN
BOTTOM PLAN-POWER AND SIGNAL

DWG NO E100-5
SHEET NO 205 OF 226
PROJ NO 055-006
DATE NOVEMBER 2016

Last Saved By: LocDo 11-11-16 10:18am

SHEET NOTES:

(1) SEE FLOOR PLAN DRAWING E100-5 FOR COMPLETE EQUIPMENT AND CONTROL DEVICES LOCATED IN THIS AREA.

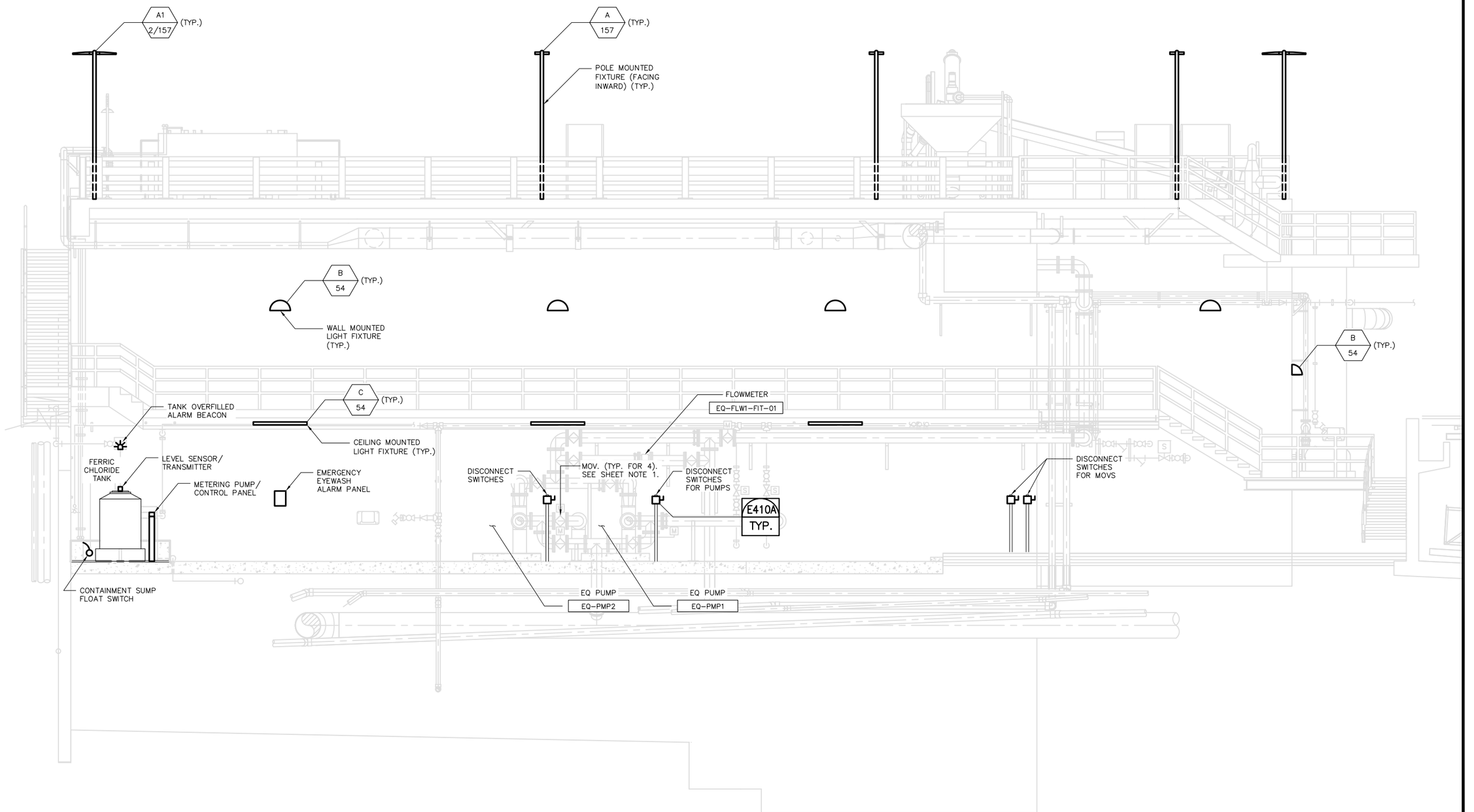

SECTION G (1)

SCALE: 1/4" = 1'-0"

REGISTERED PROFESSIONAL ENGINEER — DIEP TAN NGUYEN — No. E19317 — ELECTRICAL — STATE OF CALIFORNIA

11/18/16

0" 1" — VERIFY SCALES — BAR IS ONE INCH LONG ON FULL SIZE DRAWING. IF NOT ONE INCH LONG ON THIS DRAWING, ADJUST SCALES ACCORDINGLY

ENGINEERS, INC. Oakland, San Francisco, Orange County, Ca.

RMC water and environment

REV	DATE	BY	APVD	DESCRIPTION
1				
2				
3				
4				
5				

DESIGNED	TP
DRAWN	LD
CHECKED	DN

SUBMITTED: MARK TAKEMOTO, RMC PROJECT ENGINEER CE-64369

APPROVED: STEVE CLARY, RMC ENGINEER CE-30318

SAUSALITO · MARIN CITY SANITARY DISTRICT

TREATMENT AND WET WEATHER FLOW UPGRADE

EQUALIZATION CROSS SECTION LIGHTING ELEVATION DETAIL

DWG NO	E100-6
SHEET NO	206 OF 226
PROJ NO	055-006
DATE	NOVEMBER 2016

FILENAME: 286F_E100-6 11-18-16 09:01am LocDo || XREFS: X-SMCSD-TBLK | X-Headworks Sections | X-SitePlan | MTakemoto-PE-stamp |<<--

Last Saved By: LocDo 11-11-16 09:50am

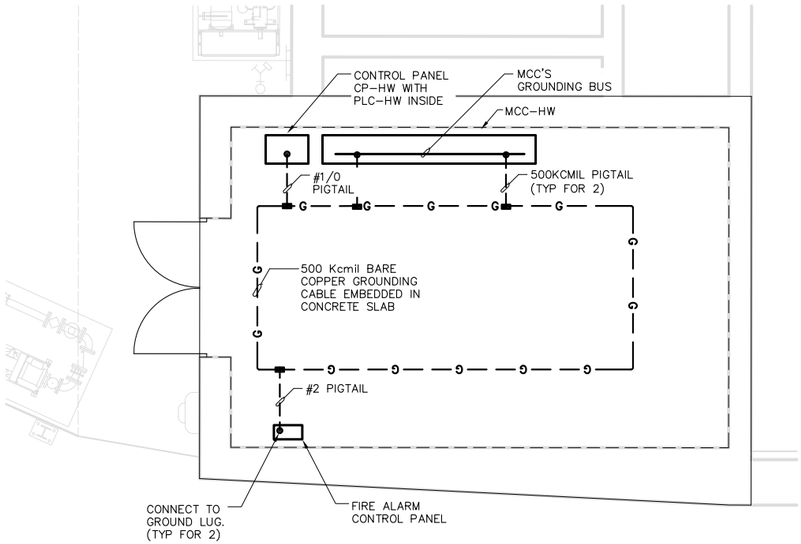

ELECTRICAL ROOM – GROUNDING PLAN (A)

SCALE: 3/16" = 1'–0"

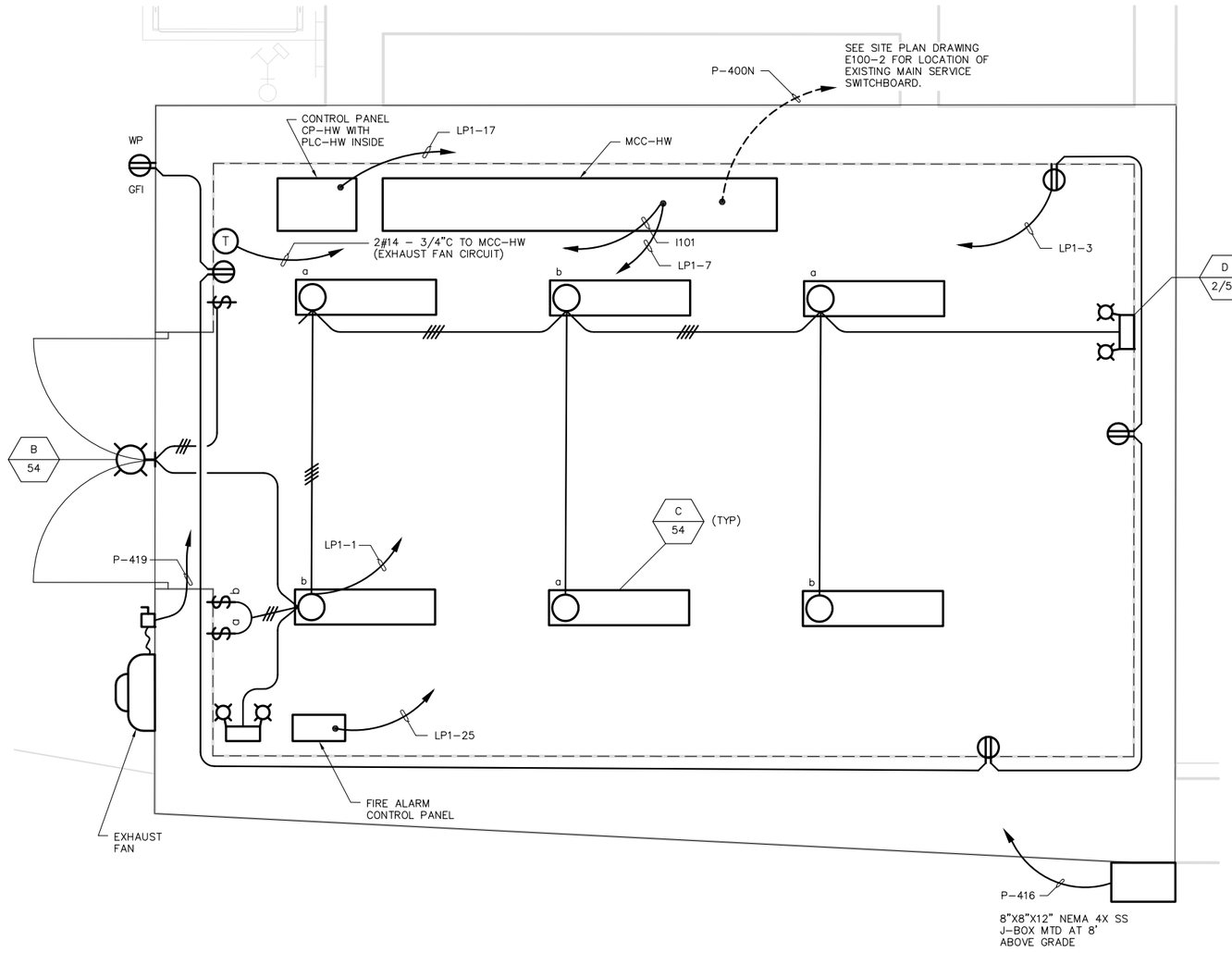

ELECTRICAL ROOM – LIGHTING/POWER PLAN (B)

SCALE: 3/8" = 1'–0"

FILENAME: 286F_E100-7 11-18-16 09:01am LocDo || XREFS: X-SMCSD-TBLK | MTakemoto-PE-stamp |<<--

Last Saved By: LocDo 11-11-16 09:51am

REGISTERED PROFESSIONAL ENGINEER — DEPTAN NGUYEN — No. E17008 — 8/30/17 — ELECTRICAL — STATE OF CALIFORNIA

11/18/16

0" 1" — VERIFY SCALES — BAR IS ONE INCH LONG ON FULL SIZE DRAWING. IF NOT ONE INCH LONG ON THIS DRAWING, ADJUST SCALES ACCORDINGLY

ENGINEERS, INC. Oakland, San Francisco, Orange County, Ca

RMC water and environment

REV	DATE	BY	APVD	DESCRIPTION

DESIGNED	TP
DRAWN	LD
CHECKED	DN

RMC PROJECT ENGINEER CE-64369

RMC ENGINEER CE-30318

SAUSALITO · MARIN CITY SANITARY DISTRICT

TREATMENT AND WET WEATHER FLOW UPGRADE

ELECTRICAL ENLARGED PLAN MCC ROOM - POWER, LIGHTING AND SIGNAL

DWG NO	E100-7
SHEET NO	207 OF 226
PROJ NO	055-006
DATE	NOVEMBER 2016

FILENAME: 286F_E200-1 11-18-16 09:06am LocDo || XREFS: | X-SMCSD-TBLK | X-Topo Survey new | X-Site | X-SitePlan | X-Treatment Plant site plan | 0055-006-M100-4 | 0055-006-M100-3 | S-HEADWORKS-PLAN | X-Headworks Sections | 0055-006-M100-2 | 0055-006-M200-2 | S-TANK-PLAN | MTakemoto-PE-stamp |

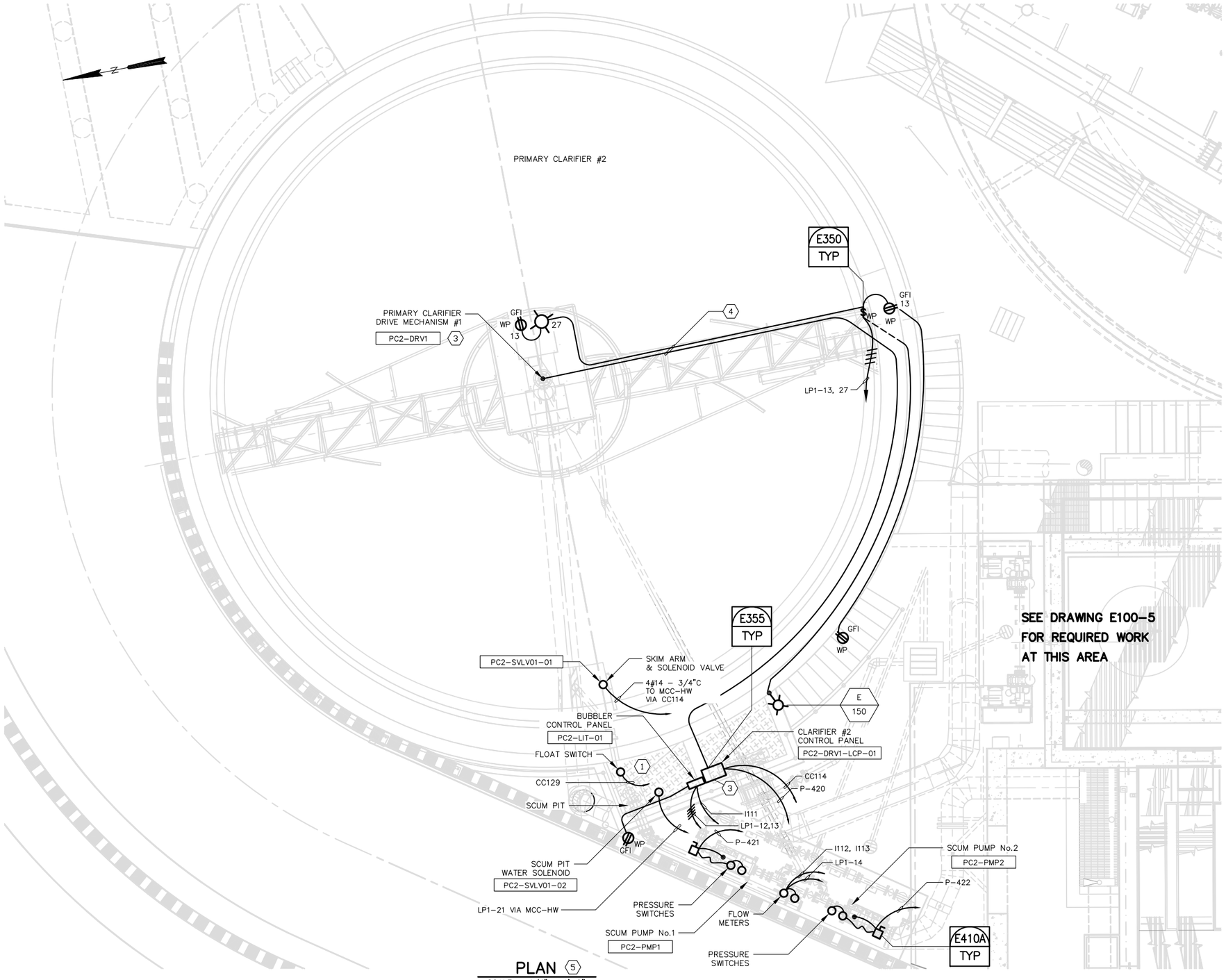

PLAN 5
SCALE: 1/4" = 1'-0"

SHEET NOTES:

1. ALL CONDUITS INSTALLED ON THE CLARIFIER AND SCUM PIT AREA SHALL BE ARRANGED IN A MANNER TO VOID CAUSING OR CREATING TRIPPING HAZARDS. CERTAIN PORTIONS OF CONDUITS MAY BE UNDERGROUND AS REQUIRED.
2. THERE ARE TWO 1" CONDUITS REQUIRED: ONE CONDUIT SHALL CONTAIN 3#12, #12 GND AND 2#14, 4#14 SPARES AND ONE CONDUIT SHALL CONTAIN 8#14 AND 4#14 SPARES FOR CONNECTIONS TO CONTROL DEVICES SUCH AS TORQUE SWITCHES, SHEAR PIN SWITCH AND SKIM ARM SWITCH. EXACT LOCATIONS OF THESE FIELD DEVICES SHALL BE AS REQUIRED BY THE CLARIFIER MANUFACTURER.
3. REFER TO CONTROL PANEL BLOCK DIAGRAM SHOWN ON DRAWING E-8 FOR DEVICES FURNISHED BY THE PACKAGED EQUIPMENT SUPPLIER. THESE DEVICES SHALL BE WIRED PER APPROVED SHOP DRAWINGS.
4. ROUTE CONDUIT ALONG SIDE OF THE WALKWAY. ALSO SEE NOTE 1.
5. REFER TO MECHANICAL DRAWINGS M-200 SERIES FOR EXACT LOCATIONS OF EQUIPMENT REQUIRING POWER AND OR CONTROLS.

REGISTERED PROFESSIONAL ENGINEER — DIEP TAN NGUYEN — No. E19017 — ELECTRICAL — STATE OF CALIFORNIA
11/18/16

0" 1" — VERIFY SCALES — BAR IS ONE INCH LONG ON FULL SIZE DRAWING. IF NOT ONE INCH LONG ON THIS DRAWING, ADJUST SCALES ACCORDINGLY

ENGINEERS, INC. Oakland, San Francisco, Orange County, Ca.

RMC water and environment

REV	DATE	BY	APVD	DESCRIPTION
1				
2				
3				
4				
5				

DESIGNED	TP
DRAWN	LD
CHECKED	DN

SUBMITTED: MARK TAKEMOTO, RMC PROJECT ENGINEER CE-64369

APPROVED: STEVE CLARY, RMC ENGINEER CE-30318

SAUSALITO · MARIN CITY SANITARY DISTRICT

TREATMENT AND WET WEATHER FLOW UPGRADE

PRIMARY SLUDGE/SCUM PUMPS PARTIAL PLAN AND SECTION

DWG NO	E200-1
SHEET NO	208 OF 226
PROJ NO	055-006
DATE	NOVEMBER 2016

Last Saved By: LocDo 11-11-16 09:52am

SHEET NOTES:

1. CONTRACTOR SHALL DISCONNECT AND REMOVE EXISTING POWER CONDUCTORS.
2. CORE DRILL WALL TO INSTALL NEW CONDUIT REQUIRED TO FEED NEW MOTOR AS SHOWN. CONDUIT SHALL BE SUPPORTED FROM UNISTRUT CHANNEL AND SHALL BE TRANSITIONED TO FLEXIBLE CONDUIT PRIOR TO TERMINATED ON THE MOTOR'S BULKHEAD AS SHOWN. PROVIDED AND INSTALL "EYS" FITTING FOR CONDUIT ENTERING THIS PUMP ROOM.
3. SEE DRAWING E-4 FOR REQUIRED WORK IN THIS POWER PANEL.
4. THE MOTOR TERMINATION J-BOX SHALL BE ONE SIZE LARGER TO ACCOMMODATE EXISTING AND NEW CONDUITS AS SHOWN. (TYPICAL FOR 3 MOTORS.)
5. FURNISH AND INSTALL NEW PRESSURE GAUGE FOR EACH OF THE PUMPS. SEE DETAIL I101/TYP FOR REQUIREMENTS.
6. SEE DETAIL C/E-4 FOR REQUIRED MODIFICATIONS.

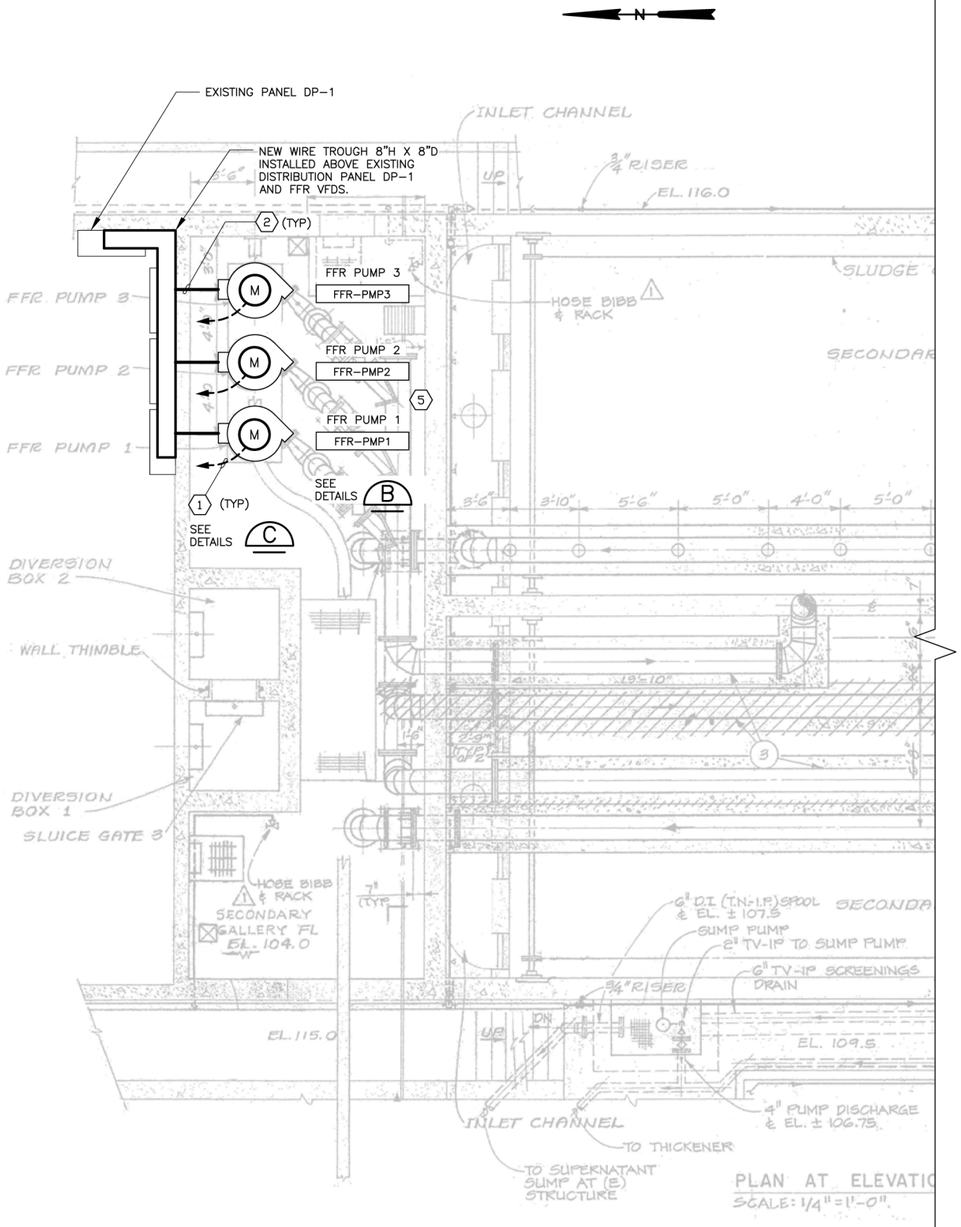

PLAN A
1/4" = 1'-0"

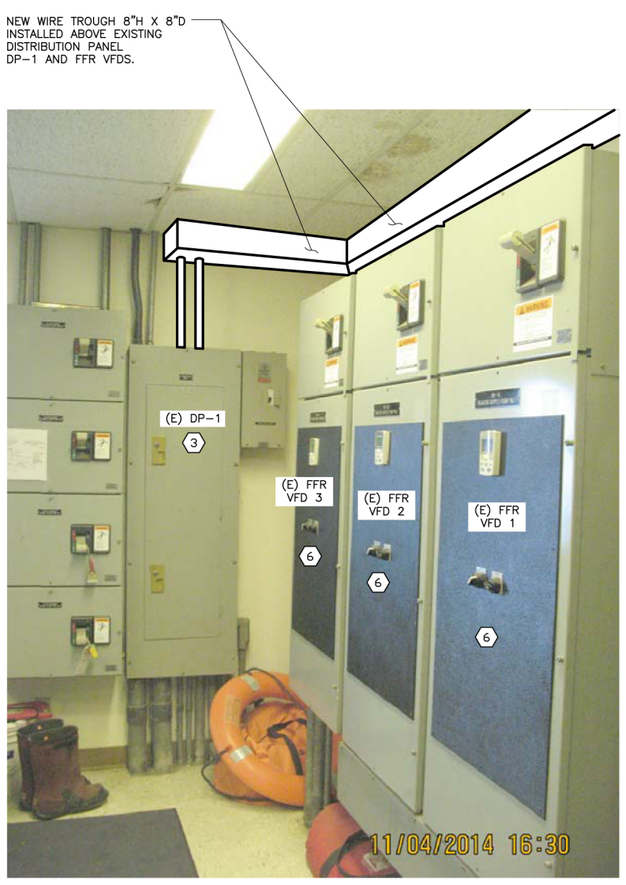

(E) DP-1 AND FFR VFDS B
SCALE: NTS

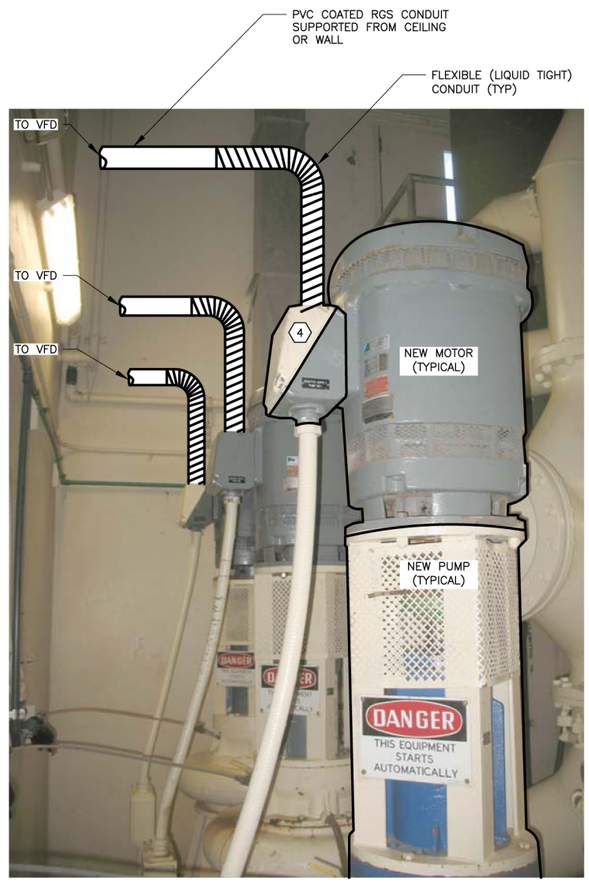

NEW FFR PUMPS/MOTORS C 5
SCALE: NTS

REGISTERED PROFESSIONAL ENGINEER — DEP TAN NGUYEN — No. E19008 — 6/30/17 — ELECTRICAL — STATE OF CALIFORNIA
11/18/16

0" 1" — VERIFY SCALES — BAR IS ONE INCH LONG ON FULL SIZE DRAWING. IF NOT ONE INCH LONG ON THIS DRAWING, ADJUST SCALES ACCORDINGLY

ENGINEERS, INC. Oakland, San Francisco, Orange County, Ca

RMC water and environment

REV	DATE	BY	APVD	DESCRIPTION
1				
2				
3				
4				
5				

DESIGNED	TP
DRAWN	LD
CHECKED	DN

SUBMITTED: MARK TAKEMOTO, RMC PROJECT ENGINEER CE-64369
APPROVED: STEVE CLARY, RMC ENGINEER CE-30318

SAUSALITO · MARIN CITY SANITARY DISTRICT

TREATMENT AND WET WEATHER FLOW UPGRADE

FIXED FILM REACTOR MODIFICATIONS PLAN - POWER AND SIGNAL

DWG NO E300-1
SHEET NO 209 OF 226
PROJ NO 055-006
DATE NOVEMBER 2016

FILENAME: 286F_E300-1 11-11-16 03:51pm LocDo || XREFS|| X-SMCSD-TBLK | MTakemoto-PE-stamp |<<--
Last Saved By: LocDo 11-11-16 11:36am

SHEET NOTES:

1. ALL CONDUITS IN THIS AREA SHALL BE ROUTED EXPOSED ALONG EXISTING WALL BEHIND THE FILTERS TO THE CONTROL PANELS. PROVIDE NEW UNISTRUT CHANNELS AS REQUIRED TO SUPPORT THE CONDUITS.
2. SEE DRAWING E-25 FOR EQUIPMENT AND DEVICES LOCATED IN THIS EXISTING GENERATOR BUILDING.
3. REFER TO CONTROL PANEL BLOCK DIAGRAM SHOWN ON DRAWING E-6 FOR DEVICES AND INSTRUMENTS FURNISHED BY THE PACKAGED EQUIPMENT SUPPLIER. SOME OF THESE DEVICES AND INSTRUMENTS ARE SKID MOUNTED, SOME ARE SHIPPED LOOSE. ALL SHALL BE INSTALLED AND WIRED PER APPROVED SHOP DRAWINGS.
4. THE FILTER CONTROL PANELS SHALL NOT BLOCK EXISTING GENERATOR'S INLET AIR GRILL.
5. CONDUITS SHALL BE INSTALLED IN A MANNER THAT NO TRIPPING HAZARDS SHALL BE CREATED.
6. REFER TO MECHANICAL DRAWINGS M-400 SERIES FOR EXACT LOCATIONS OF EQUIPMENT REQUIRING POWER AND OR CONTROLS.

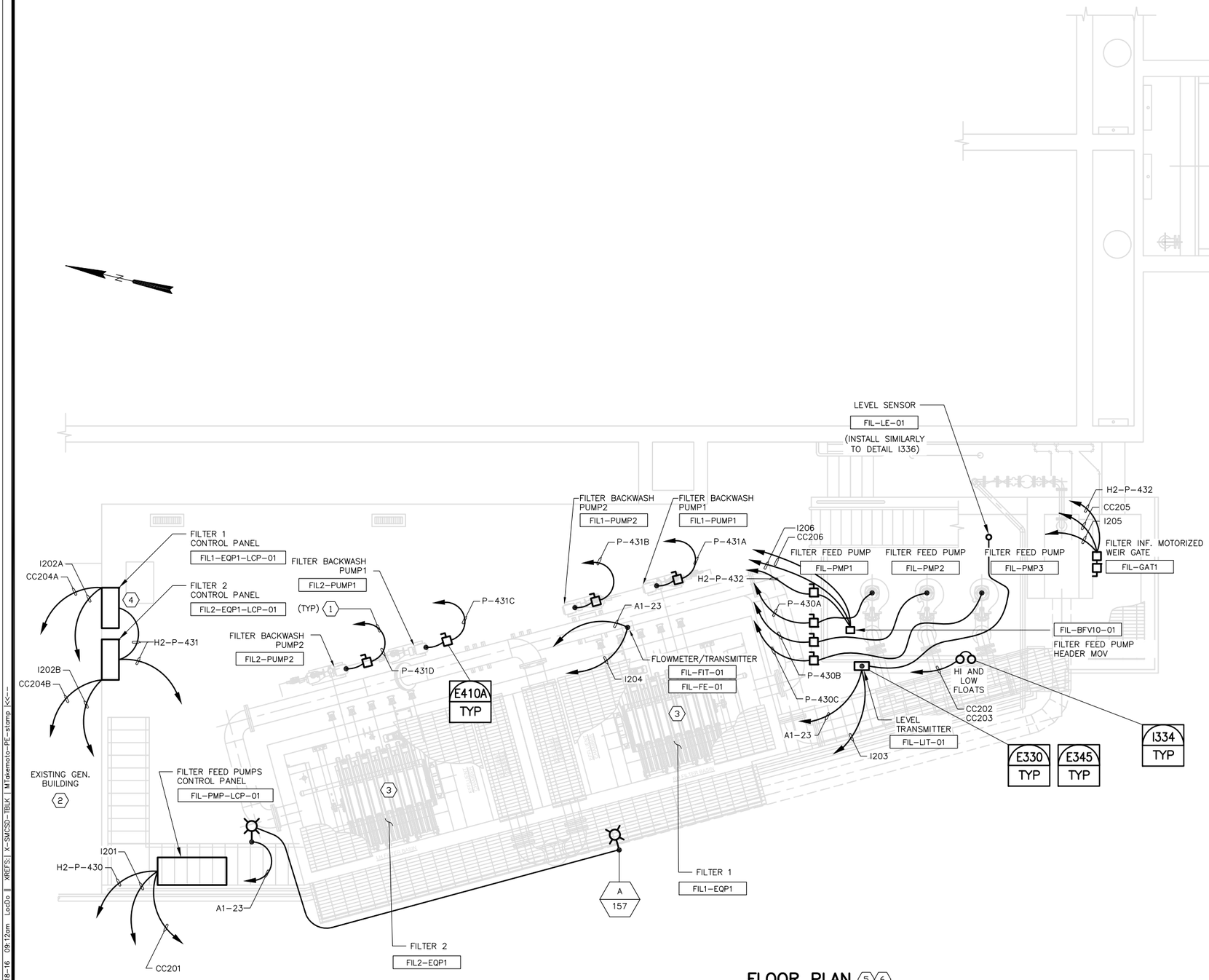

FLOOR PLAN 5 6

1/4"=1'-0"

REGISTERED PROFESSIONAL ENGINEER DIEP TAN NGUYEN No. E-10597 Exp. 6/30/17 ELECTRICAL STATE OF CALIFORNIA

11/18/16

0" 1"
— VERIFY SCALES —
BAR IS ONE INCH LONG ON FULL SIZE DRAWING. IF NOT ONE INCH LONG ON THIS DRAWING, ADJUST SCALES ACCORDINGLY

ENGINEERS, INC. Oakland, San Francisco, Orange County, CA

RMC water and environment

REV	DATE	BY	APVD	DESCRIPTION
△				
△				
△				
△				
△				

DESIGNED	TP
DRAWN	LD
CHECKED	DN

SUBMITTED: MARK TAKEMOTO
RMC PROJECT ENGINEER CE-64369

APPROVED: STEVE CLARY
RMC ENGINEER CE-30318

SAUSALITO • MARIN CITY SANITARY DISTRICT

TREATMENT AND WET WEATHER FLOW UPGRADE

EFFLUENT FILTERS PLAN
POWER AND SIGNAL

DWG NO	E400-1
SHEET NO	210 OF 226
PROJ NO	055-006
DATE	NOVEMBER 2016

FILENAME: 286F_E400-1 11-18-16 09:12am LocDo || XREFS:| X-SMCSD-TBLK | MTakemoto-PE-stamp |<<--

Last Saved By: LocDo 11-11-16 09:54am

INSTRUMENT IDENTIFICATION

EXAMPLE SYMBOLS

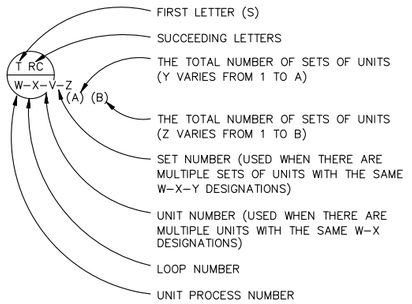



FIELD MOUNTED INSTRUMENT



REAR–OF–PANEL MOUNTED INSTRUMENT



PANEL MOUNTED INSTRUMENT



SHARED DISPLAY, SHARED CONTROL (DCS) PRIMARY LOCATION, NORMALLY ACCESSIBLE TO OPERATOR

SPECIAL CASES



ON AND OFF EVENT LIGHTS



OPENED AND CLOSED POSITION LIGHTS



OPENED AND CLOSED POSITION SWITCHES



ON–OFF HAND SWITCH. MAINTAINED CONTACT SWITCH (CONTROLLED DEVICE WILL RESTART ON RETURN OF POWER AFTER POWER FAILURE).



STOP–START HAND SWITCH MOMENTARY CONTACT SWITCHES (CONTROLLED DEVICE WILL NOT RESTART ON RETURN OF POWER AFTER POWER FAILURE).



ELECTRIC ACTUATOR WITH INTEGRAL OPEN–STOP–CLOSE MOMENTARY CONTACT CONTROL SWITCH



FLOW INDICATING, COMPUTER/MANUAL CONTROL STATION



FLOW INDICATING, COMPUTER/AUTO/MANUAL CONTROL STATION

ALTERNATE INSTRUMENT IDENTIFICATION

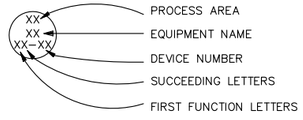

INTERNATIONAL SOCIETY FOR AUTOMATION (ISA) TABLE

	FIRST LETTER(S)		SUCCEEDING LETTERS		
LETTER	PROCESS OR INITIATING VARIABLE	MODIFIER	READOUT OR PASSIVE FUNCTION	OUTPUT FUNCTION	MODIFIER
A	ANALYSIS (+)		ALARM		
B	BURNER FLAME		USERS CHOICE (+)	USERS CHOICE (+)	USERS CHOICE (+)
C	CONDUCTIVITY			CONTROL	
D	DENSITY (S.G)	DIFFERENTIAL			
E	VOLTAGE		PRIMARY ELEMENT		
F	FLOW RATE	RATIO			
G	GAUGE		GLASS	GATE	
H	HAND (MANUAL)				HIGH
I	CURRENT		INDICATE		
J	POWER	SCAN			
K	TIME OR SCHEDULE			CONTROL STATION	
L	LEVEL		LIGHT (PILOT)		LOW
M	MOTION				MIDDLE
N	USERS CHOICE (+)		USERS CHOICE (+)	USERS CHOICE (+)	USERS CHOICE (+)
O	USERS CHOICE (+)		ORIFICE		
P	PRESSURE (OR VACUUM)		POINT (TEST CONNECTION)		
Q	QUANTITY OR EVENT(+)	INTEGRATE	INTEGRATE		
R			RECORD OR PRINT		
S	SPEED OR FREQUENCY	SAFETY		SWITCH	
T	TEMPERATURE			TRANSMIT	
U	MULTIVARIABLE (+)		MULTIFUNCTION (+)	MULTIFUNCTION (+)	MULTIFUNCTION (+)
V	VISCOSITY			VALVE OR DAMPER	
W	WEIGHT OR FORCE		WELL		
X	UNCLASSIFIED (+)		UNCLASSIFIED (+)	UNCLASSIFIED (+)	UNCLASSIFIED (+)
Y	EVENT			RELAY OR COMPUTE (+)	
Z	POSITION			DRIVE, ACTUATE OR UNCLASSIFIED FINAL CONTROL ELEMENT	

(+) WHEN USED, EXPLANATION IS SHOWN ADJACENT TO INSTRUMENT SYMBOL. SEE ABBREVIATIONS AND LETTER SYMBOLS.

TRANSDUCERS

A	ANALOG	I	CURRENT
D	DIGITAL	P	PNEUMATIC
E	VOLTAGE	PF	PULSE FREQUENCY
F	FREQUENCY	PD	PULSE DURATION
H	HYDRAULIC	R	RESISTANCE

EXAMPLE:



CURRENT TO PNEUMATIC TRANSDUCER (BACK OF PANEL, IN A FLOW LOOP)

PVLVOX–XX

- P: PLUG
- C: CHECK
- B: BUTTERFLY
- S: SOLENOID
- BL: BALL

SELF CONTAINED VALVE & EQUIPMENT TAG NUMBERS

PA: PLANT ABBREVIATION
W: UNIT PROCESS NUMBER
D:
- ARV = AIR RELEASE VALVE
- AVRV = AIR AND VACUUM RELEASE VALVE
- E = EJECTOR
- FCV = FLOW CONTROL VALVE
- G = GATE
- LCV = LEVEL CONTROL VALVE
- M = MECHANICAL EQUIPMENT
- P = PUMP
- PCV = PRESSURE CONTROL VALVE
- VRV = VACUUM RELIEF VALVE
- PSV = PRESSURE RELIEF VALVE
- T = TANK
- TCV = TEMPERATURE CONTROL VALVE
- AHU = AIR HANDLING UNIT

Y: LOOP NUMBER
X: UNIT NUMBER

LINE LEGEND

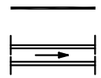
PROCESS (CLOSED CONDUIT, DASHED LINE INDICATES ALTERNATE FLOW STREAM)

PROCESS (OPEN CHANNEL)

STOP LOGS

ELECTRIC SIGNAL W/QUANTITY INDICATED

ELECTRIC SIGNAL (ON/OFF, ETC.)

PNEUMATIC SIGNAL

FIELD SYSTEM SIGNAL

HYDRAULIC SYSTEM SIGNAL

DATA LINK

EXISTING BUILDING OR FACILITIES

SOFTWARE LINK

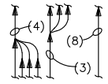

PARALLELING LINES (PARENTHETICAL NUMBER INDICATES THE NUMBER OF SIGNALS REPRESENTED)

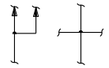
CONNECTING LINES

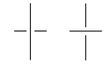
NON–CONNECTING LINES

INTERFACE SYMBOLS

= PROCESS INTERFACE

= SIGNAL INTERFACE

W = LETTER COORDINATE

A = NUMBER COORDINATE

D = DESTINATION DRAWING No.

S = SOURCE DRAWING No.

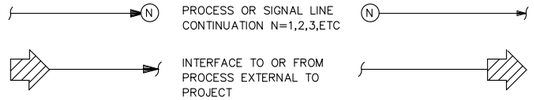

PROCESS OR SIGNAL LINE CONTINUATION N=1,2,3,ETC

INTERFACE TO OR FROM PROCESS EXTERNAL TO PROJECT

GENERAL NOTES

1. P & ID'S ARE FOR INFORMATION ON CONTROL CONCEPTS AND INSTRUMENTATION ONLY. REFER TO PLANS AND SPECIFICATIONS FOR DETAILS.
2. THIS IS A STANDARD LEGEND. THEREFORE, NOT ALL OF THE SYMBOLS ARE USED IN THIS PROJECT.
3. REFER TO SPECIFICATION FOR LOCAL AND SCADA CONTROL LOGIC.

RTU TERMINATIONS

- △ DISCRETE INPUT
- ▽ DISCRETE OUTPUT
- ▲ ANALOG INPUT
- ▼ ANALOG OUTPUT

ABBREVIATIONS & LETTER SYMBOLS

AI	ANALOG INPUT
AM	AUTO–MANUAL
AO	ANALOG OUTPUT
CAM	COMPUTER–AUTO–MANUAL
CM	COMPUTER–MANUAL
CP–X	CONTROL PANEL No. X
CG	COMBUSTIBLE GAS
CO	CARBON MONOXIDE
CTEL	CONNECT TO EXISTING LINE
CP/DCS	CONTROL PANEL/DCS
DSRSD	DUBLIN SAN RAMON SERVICES DISTRICT
DCS	DISTRIBUTED CONTROL SYSTEM
DCU	DISTRIBUTED CONTROL UNIT
DI	DISCRETE INPUT
DO	DISCRETE OUTPUT
(E)	EXISTING
ES	EMERGENCY STOP
FLP	FAIL IN LAST POSITION
FBM	FIELD BUS MODULE
FM	FORCE MAIN
FOR	FORWARD–OFF–REVERSE
FP–W–X	FIELD PANEL No. WX WHERE W = UNIT PROCESS NUMBER X = PANEL NUMBER
FR	FORWARD–REVERSE
FS	FAST – SLOW
GBT	GRAVITY BELT THICKENER
HW	HEADWORK
H_2S	HYDROGEN SULFIDE
HOA	HAND–OFF–AUTO
HOR	HAND–OFF–REMOTE
LA	LOCAL–AUTO
LP/DCS	LOCAL PANEL–DISTRIBUTED CONTROL SYSTEM
LOC	LOCAL (AT FIELD DEVICE)
LOR	LEFT OFF RIGHT
LOS	LOCKOUT STOP
LP	LOCAL PANEL
L/S	LEAD–STANDBY
LR	LOCAL–REMOTE
MA	MANUAL–AUTO
MCC–X	MOTOR CONTROL CENTER No. X
MW	MOTOR WINDINGS
NS	NORTH–SOUTH
OIT	OPERATOR INTERFACE TERMINAL
O_2	OXYGEN
OC	OPEN–CLOSE (D)
OCA	OPEN–CLOSE–AUTO
OCR	OPEN–CLOSE–REMOTE
OCU	ODOR CONTROL UNIT
OO	ON–OFF – RTU REMOTE TERMINAL UNIT
OOA	ON–OFF–AUTO
OOR	ON–OFF–REMOTE
ORP	OXIDATION REDUCTION POTENTIAL
OSC	OPEN–STOP–CLOSE
REV	REVERSE
SBD	SODIUM BISULFITE DRAIN
SHD	SODIUM HYPOCHLORITE DRAIN
SLOS	START–LOCKOUT–STOP
S/D	SEDIMENTATION–DEWATERING
S/D/C	SEDIMENTATION–DEWATERING–CLOSED
SS	START–STOP
SSC	SUPERVISORY SET POINT CONTROL
VFD	VARIABLE FREQUENCY DRIVE
VHC	VOLATILE HYDROCARBON
*	PROVIDED AS PACKAGED EQUIPMENT

REGISTERED PROFESSIONAL ENGINEER — DIEP TAN NGUYEN — No. E20017 — ELECTRICAL — STATE OF CALIFORNIA
11/18/16

0" 1" — VERIFY SCALES — BAR IS ONE INCH LONG ON FULL SIZE DRAWING. IF NOT ONE INCH LONG ON THIS DRAWING, ADJUST SCALES ACCORDINGLY

CH2M ENGINEERS, INC. Oakland, San Francisco, Orange County, Ca.

RMC water and environment

REV	DATE	BY	APVD	DESCRIPTION

DESIGNED	TP
DRAWN	LD
CHECKED	DN

SUBMITTED: MARK TAKEMOTO, RMC PROJECT ENGINEER CE-64369

APPROVED: STEVE CLARY, RMC ENGINEER CE-30318

SAUSALITO · MARIN CITY SANITARY DISTRICT

TREATMENT AND WET WEATHER FLOW UPGRADE

INSTRUMENTATION LEGEND AND GENERAL NOTES

DWG NO I-1
SHEET NO 211 OF 226
PROJ NO 055-006
DATE NOVEMBER 2016

FILENAME: 286F_I01 11-18-16 09:15am LocDo ‖ XREFS:‖ X-SMCSD-TBLK ‖ MTakemoto-PE-stamp ‖<<--

Last Saved By: LocDo 11-11-16 09:55am

PIPE LINE SYMBOLS

PIPE SIZE IN INCHES
PROCESS FLUID
PIPE MATERIAL
(SEE LEGEND THIS SHEET)

24-BW-SCL

3-NH3-PVC

PROCESS PIPING

BLIND FLANGE

UNION

HOSE BIB

Y-STRAINER

REDUCER/ENLARGER

PIPE EXTENDING PERPENDICULAR TO VIEWER

PIPE EXTENDING PERPENDICULAR FROM VIEWER

FLANGED JOINT

FLEXIBLE PIPE CONNECTOR

DRESSER COUPLING

SPLIT RING COUPLING

QUICK CONNECTION (CAM LOCK)

THREADED CONNECTION W/CAP

DOUBLE WALLED PIPE

CONTINUED PIPE

VALVE SYMBOLS

BUTTERFLY GATE

SLUICE OR SLIDE GATE

GATE VALVE

KNIFE GATE VALVE

GLOBE VALVE

BALL VALVE

3-WAY BALL VALVE

4-WAY BALL VALVE

ANGLE VALVE

OR BUTTERFLY VALVE

OR PLUG VALVE

3-WAY PLUG VALVE

4-WAY PLUG VALVE

CONE VALVE

PINCH VALVE

CHECK VALVE, GENERAL SYMBOL

BALL CHECK VALVE

DOUBLE DOOR CHECK VALVE

DIAPHRAGM VALVE

NEEDLE VALVE (SHOWN WITH HAND ACTUATOR)

2-WAY SOLENOID VALVE

3-WAY SOLENOID VALVE

4-WAY SOLENOID VALVE

BALL VALVE WITH CAPTIVE YOKE

FOOT VALVE

TEST PORT

MOTOR OPERATOR
MOTOR OPERATOR INCLUDES INTEGRAL MOTOR STARTER (CONTROLLER) UNLESS SHOWN OTHERWISE

CYLINDER OPERATOR

DIAPHRAGM OPERATOR

BACK PRESSURE VALVE

PRESSURE REDUCING VALVE

PRESSURE RELIEF VALVE

AIR RELIEF VALVE

VACUUM RELIEF VALVE

FOOT VALVE WITH STRAINER

AIR RELEASE VALVE

BACK FLOW PREVENTOR

VACUUM REGULATOR

VAPORIZER

STATIC MIXER

AIR/VACUUM RELIEF VALVE

OUTSIDE SCREW AND YOLK (OS&Y) GATE VALVE

OS&Y GATE VALVE OR INDICATING BUTTERFLY VALVE

INDICATING BUTTERFLY VALVE

GROUND FACE UNION WITH 3/32-INCH ORIFICE

MISCELLANEOUS SYMBOLS

DEMISTER

FIRE DEPARTMENT CONNECTION

DRY PIPE VALVE

SPRINKLER(S)

WATER MOTOR GONG

MOTOR (VARIABLE SPEED)

CENTRIFUGAL PUMP OR BLOWER

AIR COMPRESSOR

VERTICAL TURBINE PUMP

METERING PUMP

DRAIN

PULSATION DAMPENER

ACCUMULATOR

DIAPHRAGM SEAL

SIGHT GLASS

CALIBRATION COLUMN

ROTAMETER

SUBMERSIBLE PUMP

AUTOMATIC DRIP TRAP

DIAPHRAGM SEAL

RUPTURE DISK

BUCKET

FILTER

HORN

VENT

MIXER

MOTORIZED GATE

NON-MERCURY FLOAT SWITCH

BUBBLEER SYSTEM

ULTRASONIC SENSOR

MAGNETIC FLOWMETER

PROCESS STREAMS

STREAM	DESCRIPTION
BW	BACKWASH
D	DRAIN FILTERED
FA	FORCED AIR
FC	FERRIC CHLORIDE
FE	FILTERED EFFLUENT
FPE	FINAL PLANT EFFLUENT
G	GRIT
PE	PRIMARY EFFLUENT
PS	PRIMARY SLUDGE
RW	RECYCLED WATER
SC	SCREENING CONVEYOR
SD	STORM DRAIN
SE	SECONDARY EFFLUENT
IN/PI	INFLUENT/PRIMARY INFLUENT
3W	PLANT UTILITY WATER

NOTES

1. REFER TO SHEET I-1 FOR ADDITIONAL INSTRUMENTATION EQUIPMENT IDENTIFICATION, LINE SYMBOLS, ADDITIONAL ABBREVIATIONS AND INSTRUMENT TAGGING CONVENTIONS.
2. THIS IS A GENERAL P&ID LEGEND SHEET. SOME SYMBOLS OR NOTATIONS MAY NOT BE USED ON THIS PROJECT.
3. STANDARD DETAILS SHALL BE USED FOR ALL PERMANENT WORK EVEN THOUGH THEY ARE NOT CALLED OUT AT ALL LOCATIONS WHERE THEY APPLY.
4. EACH OF THE OUTDOOR FIELD TRANSMITTERS SHALL BE PROVIDED WITH A SUN SHIELD PER ELECTRICAL DETAIL E345/TYP.
5. SEE ELECTRICAL DRAWINGS FOR CLASSIFIED HAZARDOUS LOCATIONS IN WHICH INSTRUMENTS, AUXILIARIES AND INSTALLATION SHALL BE SUITABLE FOR SUCH LOCATIONS.

REGISTERED PROFESSIONAL ENGINEER DIEP TAN NGUYEN No. E17004 5/31/17 ELECTRICAL STATE OF CALIFORNIA
11/18/16

0" 1" VERIFY SCALES — BAR IS ONE INCH LONG ON FULL SIZE DRAWING. IF NOT ONE INCH LONG ON THIS DRAWING, ADJUST SCALES ACCORDINGLY

ENGINEERS, INC. Oakland, San Francisco, Orange County, Ca

RMC water and environment

REV	DATE	BY	APVD	DESCRIPTION

DESIGNED	TP
DRAWN	LD
CHECKED	DN

SUBMITTED: MARK TAKEMOTO, RMC PROJECT ENGINEER CE-64369

APPROVED: STEVE CLARY, RMC ENGINEER CE-30318

SAUSALITO · MARIN CITY SANITARY DISTRICT

TREATMENT AND WET WEATHER FLOW UPGRADE

INSTRUMENTATION SYMBOLS AND NOTES

DWG NO	I-2
SHEET NO	212 OF 226
PROJ NO	055-006
DATE	NOVEMBER 2016

FILENAME: 286F_I02 11-18-16 09:15am LocDo || XREFS: X-SMCSD-TBLK | MTakemoto-PE-stamp |<<--

Last Saved By: LocDo 11-11-16 09:55am

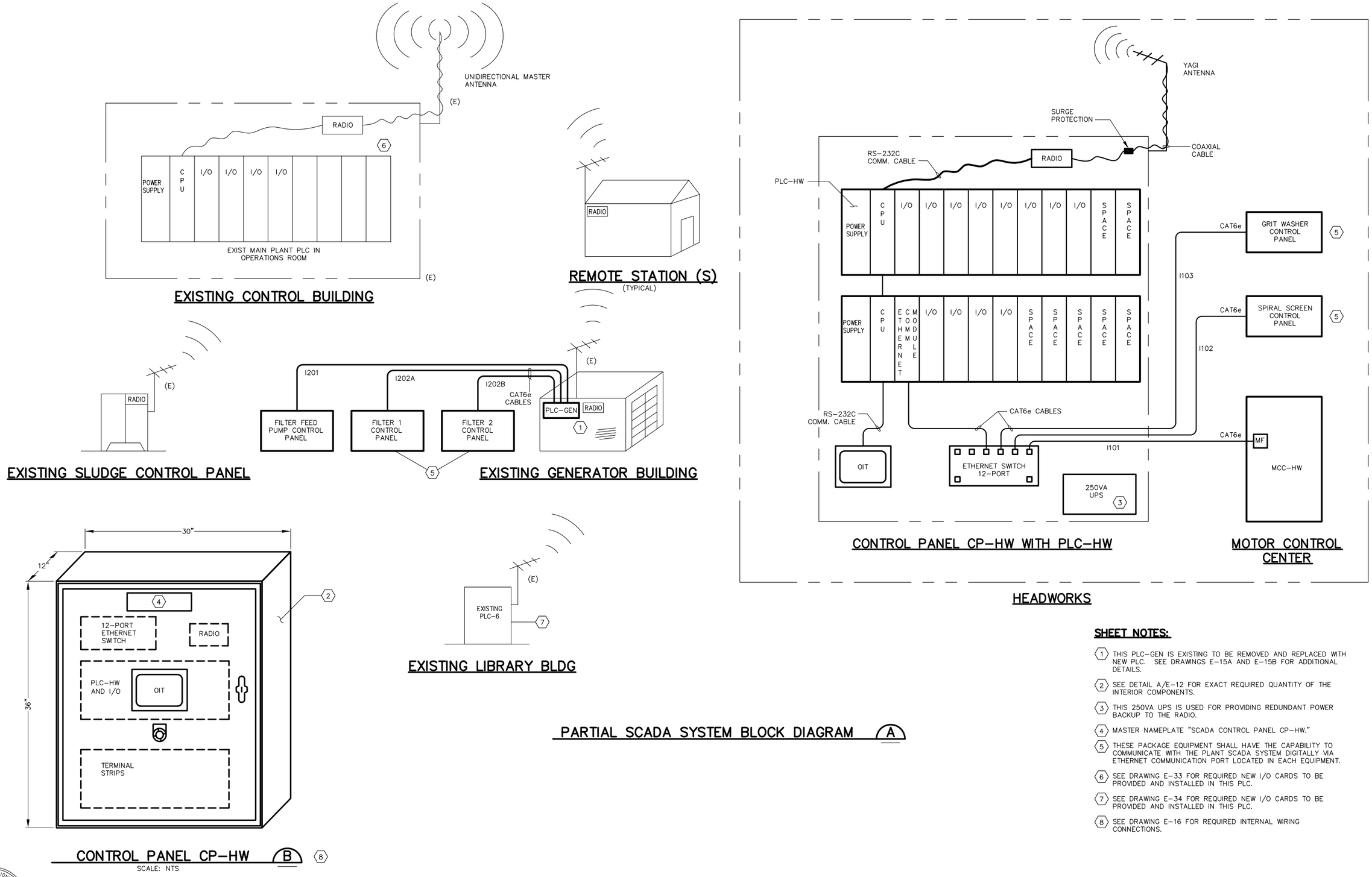

PARTIAL SCADA SYSTEM BLOCK DIAGRAM (A)

SHEET NOTES:

1. THIS PLC-GEN IS EXISTING TO BE REMOVED AND REPLACED WITH NEW PLC. SEE DRAWINGS E-15A AND E-15B FOR ADDITIONAL DETAILS.
2. SEE DETAIL A/E-12 FOR EXACT REQUIRED QUANTITY OF THE INTERIOR COMPONENTS.
3. THIS 250VA UPS IS USED FOR PROVIDING REDUNDANT POWER BACKUP TO THE RADIO.
4. MASTER NAMEPLATE "SCADA CONTROL PANEL CP-HW."
5. THESE PACKAGE EQUIPMENT SHALL HAVE THE CAPABILITY TO COMMUNICATE WITH THE PLANT SCADA SYSTEM DIGITALLY VIA ETHERNET COMMUNICATION PORT LOCATED IN EACH EQUIPMENT.
6. SEE DRAWING E-33 FOR REQUIRED NEW I/O CARDS TO BE PROVIDED AND INSTALLED IN THIS PLC.
7. SEE DRAWING E-34 FOR REQUIRED NEW I/O CARDS TO BE PROVIDED AND INSTALLED IN THIS PLC.
8. SEE DRAWING E-16 FOR REQUIRED INTERNAL WIRING CONNECTIONS.

REGISTERED PROFESSIONAL ENGINEER DIEP TAN NGUYEN No. E-10597 Exp. 6/30/17 ELECTRICAL STATE OF CALIFORNIA
11/18/16

0" 1"
VERIFY SCALES
BAR IS ONE INCH LONG ON FULL SIZE DRAWING. IF NOT ONE INCH LONG ON THIS DRAWING, ADJUST SCALES ACCORDINGLY

ENGINEERS, INC. Oakland, San Francisco, Orange County, CA

RMC water and environment

REV	DATE	BY	APVD	DESCRIPTION

DESIGNED	TP
DRAWN	LD
CHECKED	DN

SUBMITTED: MARK TAKEMOTO, RMC PROJECT ENGINEER CE-64369
APPROVED: STEVE CLARY, RMC ENGINEER CE-30318

SAUSALITO MARIN CITY SANITARY DISTRICT

TREATMENT AND WET WEATHER FLOW UPGRADE

SCADA SYSTEM BLOCK DIAGRAM

DWG NO I-3
SHEET NO 213 OF 226
PROJ NO 055-006
DATE NOVEMBER 2016

FILENAME: 286F_I03 11-18-16 09:15am LocDo || XREFS:| X-SMCSD-TBLK | MTakemoto-PE-stamp |<<--

Last Saved By: LocDo 11-11-16 09:56am

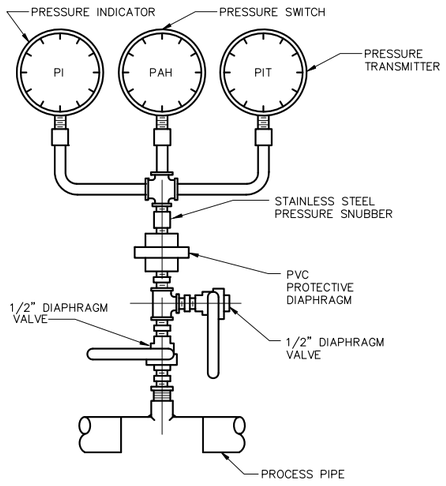

NOTES:

1. USE STAINLESS STEEL DIAPHRAGM SEAL.
2. PROVIDE SUPPORT FOR INSTRUMENTS AS REQUIRED WITH RGS CHANNELS.
3. STAINLESS STEEL TAG SHALL BE PROVIDED FOR EACH INSTRUMENTS PER P&ID.
4. THIS DETAIL APPLIES TO STAND-ALONE PRESSURE SWITCH OR PRESSURE TRANSMITTER
5. MANIFOLD SHALL BE STAINLESS STEEL 3 VALVE TYPE WITH ISOLATION & BLEED VENT.

I101 TYP PRESSURE GAUGE/TRANSMITTER DETAIL

SCALE: NTS

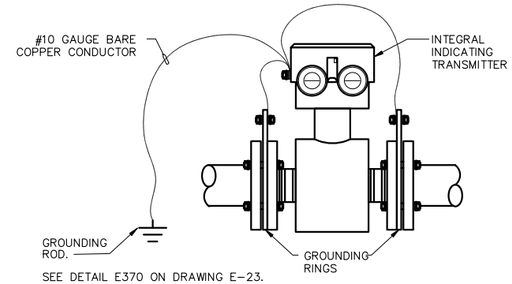

SEE DETAIL E370 ON DRAWING E-23.

I102 TYP MAGNETIC FLOWMETER GROUNDING DETAIL

SCALE: NTS

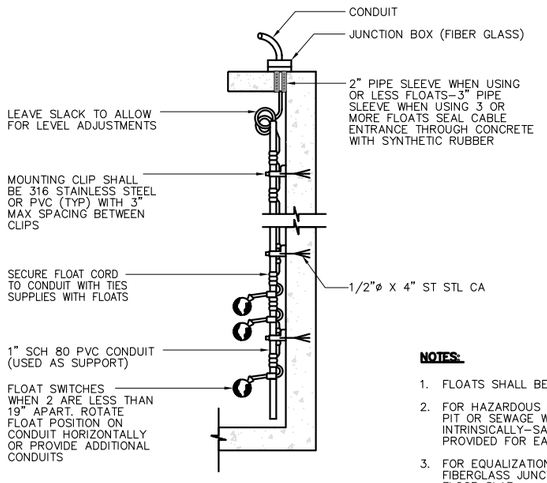

NOTES:

1. FLOATS SHALL BE NON-MERCURY TYPE.
2. FOR HAZARDOUS LOCATIONS SUCH AS SCUM PIT OR SEWAGE WET WELL, INTRINSICALLY-SAFE RELAY SHALL BE PROVIDED FOR EACH FLOAT SWITCH.
3. FOR EQUALIZATION BASINS, MOUNT FIBERGLASS JUNCTION BOX BELOW THE FLOOR SLAB.

I334 TYP FLOAT SWITCH MOUNTING

SCALE: NTS

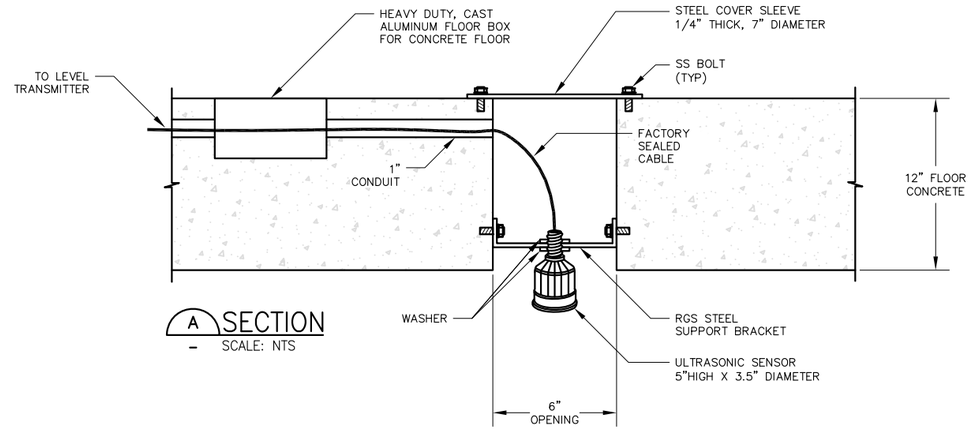

A SECTION

SCALE: NTS

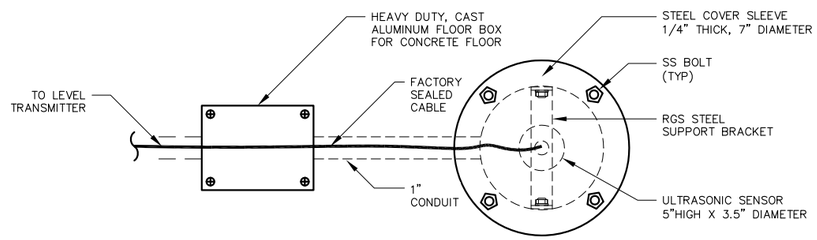

B PLAN VIEW

SCALE: NTS

NOTES:

1. THIS INSTALLATION IS TYPICAL FOR TWO SENSORS LOCATED ON EQUALIZATION BASIN.
2. FACTORY-SEALED CABLE SLACKS SHALL BE PROVIDED TO REACH TRANSMITTER.

I336 TYP BASIN ULTRASONIC SENSOR INSTALLATION DETAIL

SCALE: NTS

REGISTERED PROFESSIONAL ENGINEER — STEP TAN NGUYEN — No. E17004 — ELECTRICAL — STATE OF CALIFORNIA — 11/18/16

0" — 1" — VERIFY SCALES — BAR IS ONE INCH LONG ON FULL SIZE DRAWING. IF NOT ONE INCH LONG ON THIS DRAWING, ADJUST SCALES ACCORDINGLY

ENGINEERS, INC. Oakland, San Francisco, Orange County, Ca

RMC water and environment

REV	DATE	BY	APVD	DESCRIPTION
1				
2				
3				
4				
5				

DESIGNED	TP
DRAWN	LD
CHECKED	DN

SUBMITTED: MARK TAKEMOTO, RMC PROJECT ENGINEER CE-64369

APPROVED: STEVE CLARY, RMC ENGINEER CE-30318

SAUSALITO · MARIN CITY SANITARY DISTRICT

TREATMENT AND WET WEATHER FLOW UPGRADE

INSTRUMENTATION TYPICAL DETAILS SHEET 1 OF 2

DWG NO	I-4
SHEET NO	214 OF 226
PROJ NO	055-006
DATE	NOVEMBER 2016

FILENAME: 286F_I04 11-18-16 09:15am LocDo || XREFS: | X-SMCSD-TBLK | MTakemoto-PE-stamp |<<--

Last Saved By: LocDo 11-11-16 09:56am

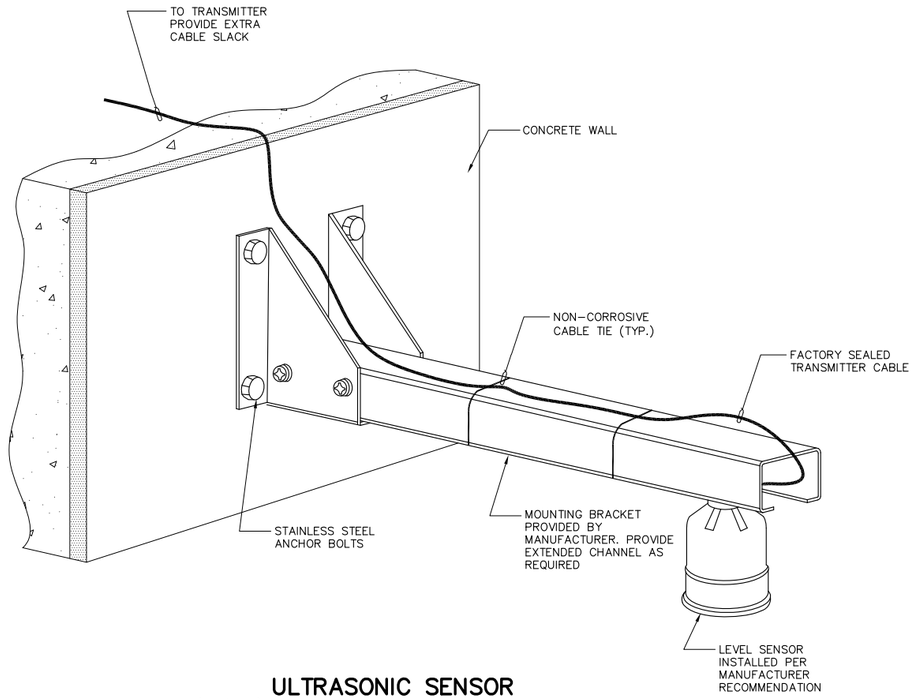

1400 TYP ULTRASONIC SENSOR FOR PARSHALL FLUME

SCALE: NTS

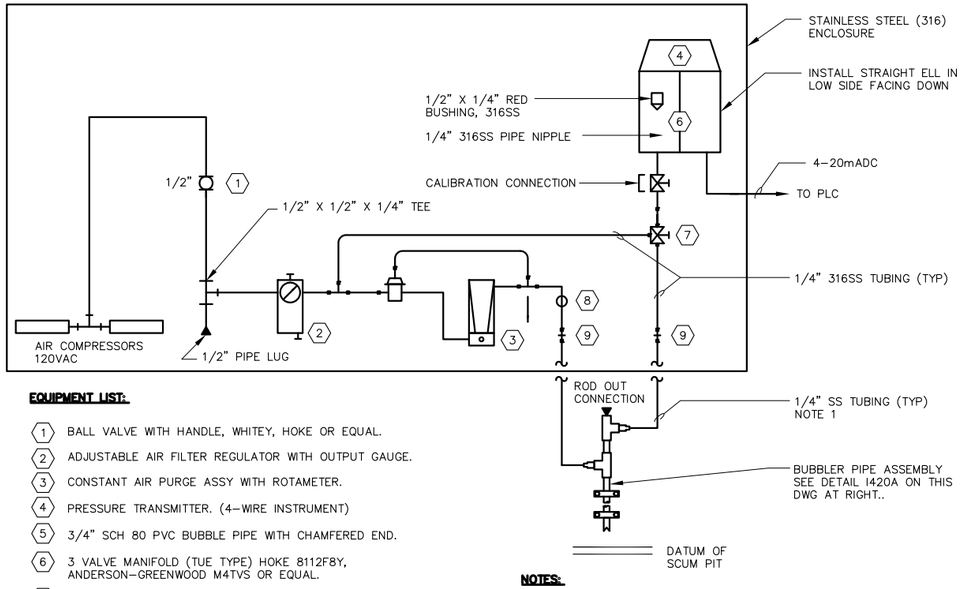

EQUIPMENT LIST:

1. BALL VALVE WITH HANDLE, WHITEY, HOKE OR EQUAL.
2. ADJUSTABLE AIR FILTER REGULATOR WITH OUTPUT GAUGE.
3. CONSTANT AIR PURGE ASSY WITH ROTAMETER.
4. PRESSURE TRANSMITTER. (4-WIRE INSTRUMENT)
5. 3/4" SCH 80 PVC BUBBLE PIPE WITH CHAMFERED END.
6. 3 VALVE MANIFOLD (TUE TYPE) HOKE 8112F8Y, ANDERSON-GREENWOOD M4TVS OR EQUAL.
7. AIR SWITCH 2 POSITION WITH ELEMENT LABEL: "PURGE-NORMAL", HOKE 7165, WHITEY 44 SERIES OR EQUAL.
8. CHECK VALVE (MAY BE INCORPORATED IN ROTAMETER).
9. 1/4" BULKHEAD UNION 316SS.

NOTES:

1. PVC TUBING SHALL BE INSTALLED IN RGS CONDUIT (EXPOSED), PVC40 (UNDERGROUND) FOR ADDITIONAL PROTECTION.
2. MASTER NAMEPLATE SHALL BE: "SCUM PIT BUBBLER PANEL PC2-LIT-01

1420 TYP BUBBLER PANEL

SCALE: NTS

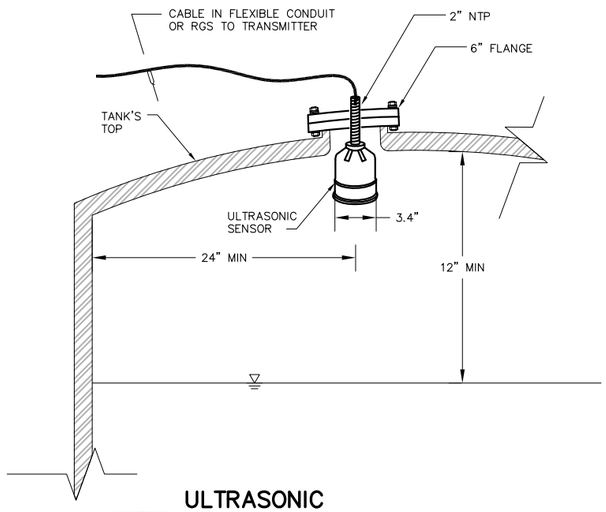

1410 TYP ULTRASONIC SENSOR FOR TANK

SCALE: NTS

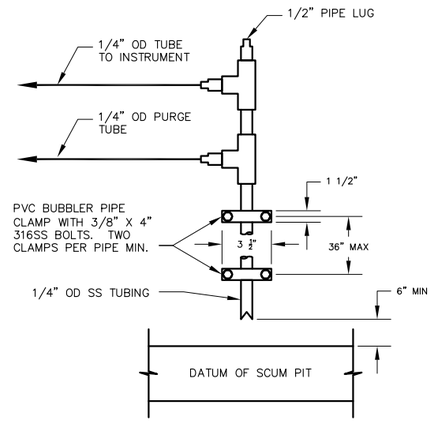

1420A TYP BUBBLER PIPE ASSEMBLY

SCALE: NTS

FILENAME: 286F_05 11-18-16 09:15am LocDo || XREFS| X-SMCSD-TBLK | MTakemoto-PE-stamp |<<--
Last Saved By: LocDo 11-11-16 09:57am

REGISTERED PROFESSIONAL ENGINEER — DIEP TAN NGUYEN — No. E17008 — 6/30/17 — ELECTRICAL — STATE OF CALIFORNIA

11/18/16

0" 1" — VERIFY SCALES — BAR IS ONE INCH LONG ON FULL SIZE DRAWING. IF NOT ONE INCH LONG ON THIS DRAWING, ADJUST SCALES ACCORDINGLY

ENGINEERS, INC. Oakland, San Francisco, Orange County, Ca. | RMC water and environment

REV	DATE	BY	APVD	DESCRIPTION

DESIGNED	TP
DRAWN	LD
CHECKED	DN

SUBMITTED: MARK TAKEMOTO, RMC PROJECT ENGINEER CE-64369

APPROVED: STEVE CLARY, RMC ENGINEER CE-30318

SAUSALITO · MARIN CITY SANITARY DISTRICT

TREATMENT AND WET WEATHER FLOW UPGRADE

INSTRUMENTATION TYPICAL DETAILS SHEET 2 OF 2

DWG NO	I-5
SHEET NO	215 OF 226
PROJ NO	055-006
DATE	NOVEMBER 2016

SHEET NOTES:

1. OPEN COMMAND AND CLOSE COMMAND.
2. OPEN STATUS, CLOSE STATUS, FAIL AND IN REMOTE MODE.
3. THESE ARE TYPICAL CONTROL AND INSTRUMENTATION FUNCTIONS PROVIDED BY THE LOCAL CONTROL PANEL. REFER TO SPECIFICATIONS FOR DETAILS OF PACKAGED EQUIPMENT.
4. ANY STATUS AND ALARM FUNCTIONS AVAILABLE IN THE LOCAL CONTROL PANEL SHALL BE DUPLICATED DISPLAYED IN THE SCADA SYSTEM.
5. EXISTING PLANT INFLUENT FLOW.
6. REFER TO CONTROL STRATEGIES IN THE SPECS FOR THE SCADA SYSTEM SOFTWARE REQUIREMENTS.

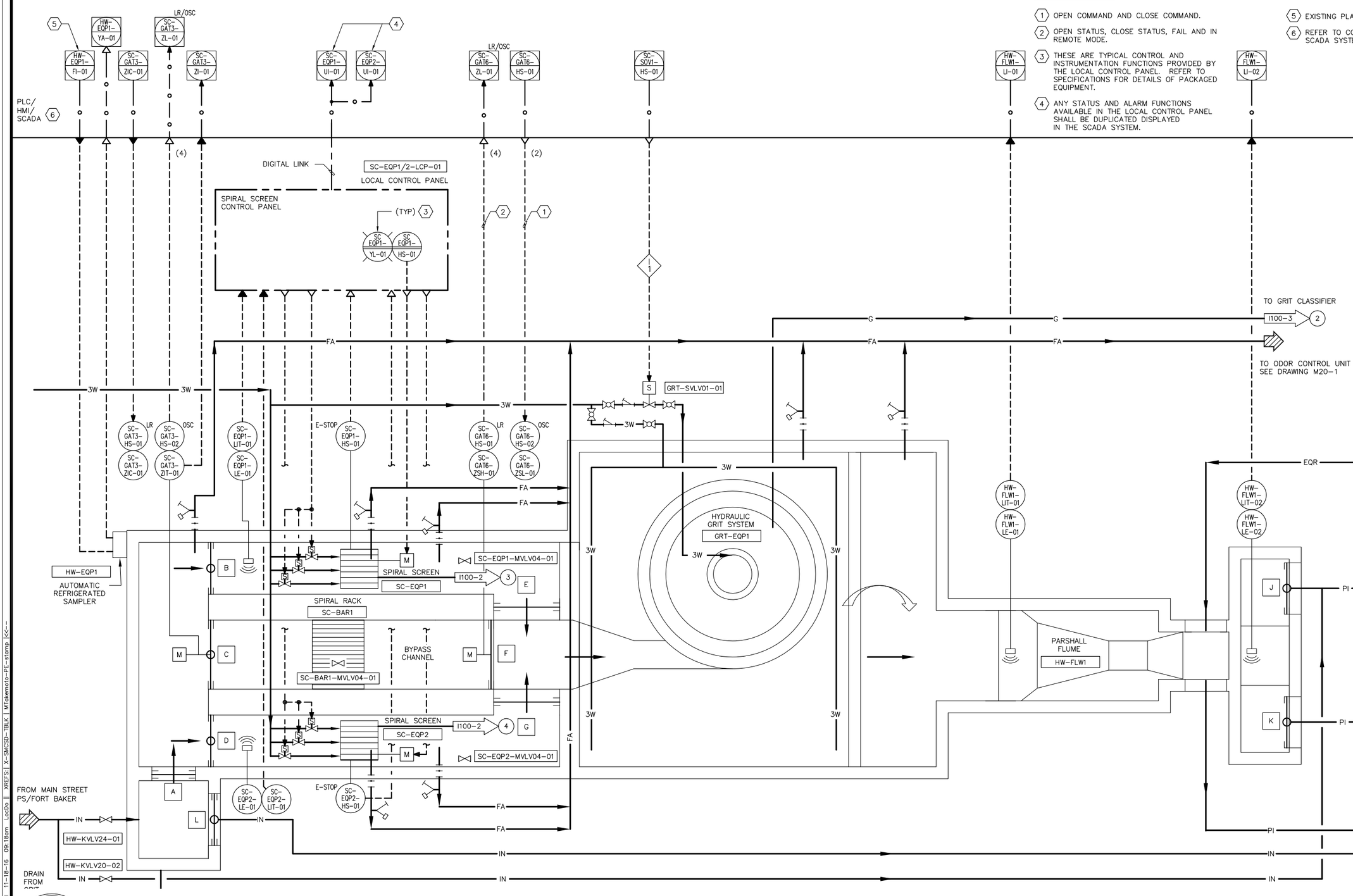

TABLE 1 GATE TAB NUMBERS	
A	SC-GAT1 (MANUAL)
B	SC-GAT2 (MANUAL)
C	SC-GAT3 (MOTORIZED)*
D	SC-GAT4 (MANUAL)
E	SC-GAT5 (MANUAL)
F	SC-GAT6 (MOTORIZED)
G	SC-GAT7 (MANUAL)
H	NOT USED
J	PC1-GAT1 (MANUAL)
K	PC2-GAT1 (MANUAL)
L	HW-GAT1 (MANUAL)

* MODULATING

REGISTERED PROFESSIONAL ENGINEER DIEP TAN NGUYEN No. E-10597 Exp. 6/30/17 ELECTRICAL STATE OF CALIFORNIA
11/18/16

0" — 1"
VERIFY SCALES
BAR IS ONE INCH LONG ON FULL SIZE DRAWING. IF NOT ONE INCH LONG ON THIS DRAWING, ADJUST SCALES ACCORDINGLY

ENGINEERS, INC.
Oakland, San Francisco, Orange County, CA

RMC water and environment

REV	DATE	BY	APVD	DESCRIPTION

DESIGNED	TP
DRAWN	LD
CHECKED	DN

SUBMITTED: MARK TAKEMOTO
RMC PROJECT ENGINEER CE-64369

APPROVED: STEVE CLARY
RMC ENGINEER CE-30318

SAUSALITO · MARIN CITY SANITARY DISTRICT

TREATMENT AND WET WEATHER FLOW UPGRADE

P&ID
HEADWORKS OVERVIEW

DWG NO	I100-1
SHEET NO	216 OF 226
PROJ NO	055-006
DATE	NOVEMBER 2016

FILENAME: 286F_I100-1 11-18-16 09:18am LocDo || XREFS:| X-SMCSD-TBLK | MTakemoto-PE-stamp |<<--

Last Saved By: LocDo 11-11-16 10:48am

SHEET NOTES:

1. THIS PANEL SHALL BE PROVIDED WITH AN EXTERNALLY MOUNTED EMERGENCY SHUT DOWN (MUSHROOM TYPE) STATION.
2. REFER TO CONTROL STRATEGIES IN THE SPECS FOR THE SCADA SYSTEM SOFTWARE REQUIREMENTS.

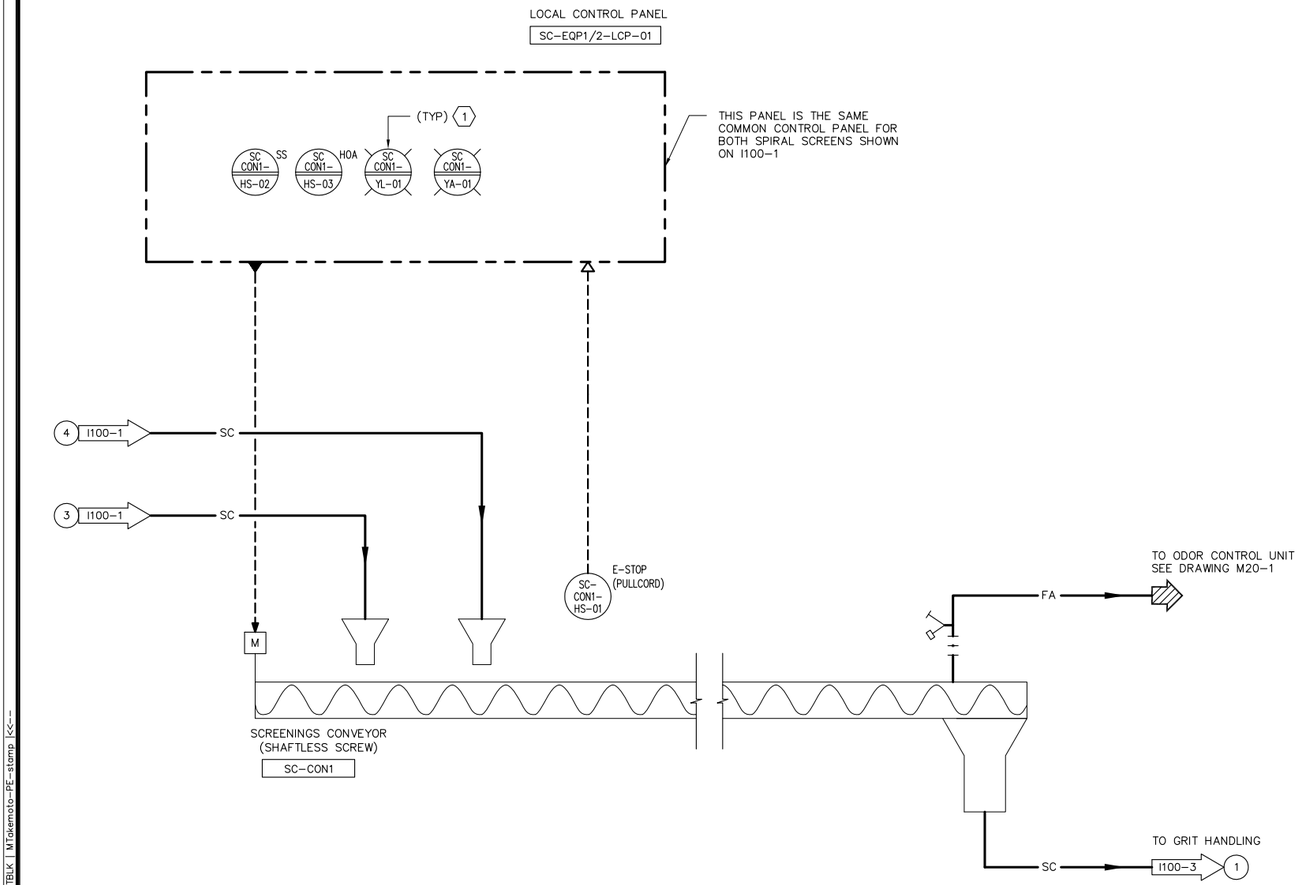

SCREENING HANDLING (A)
SCALE: NTS

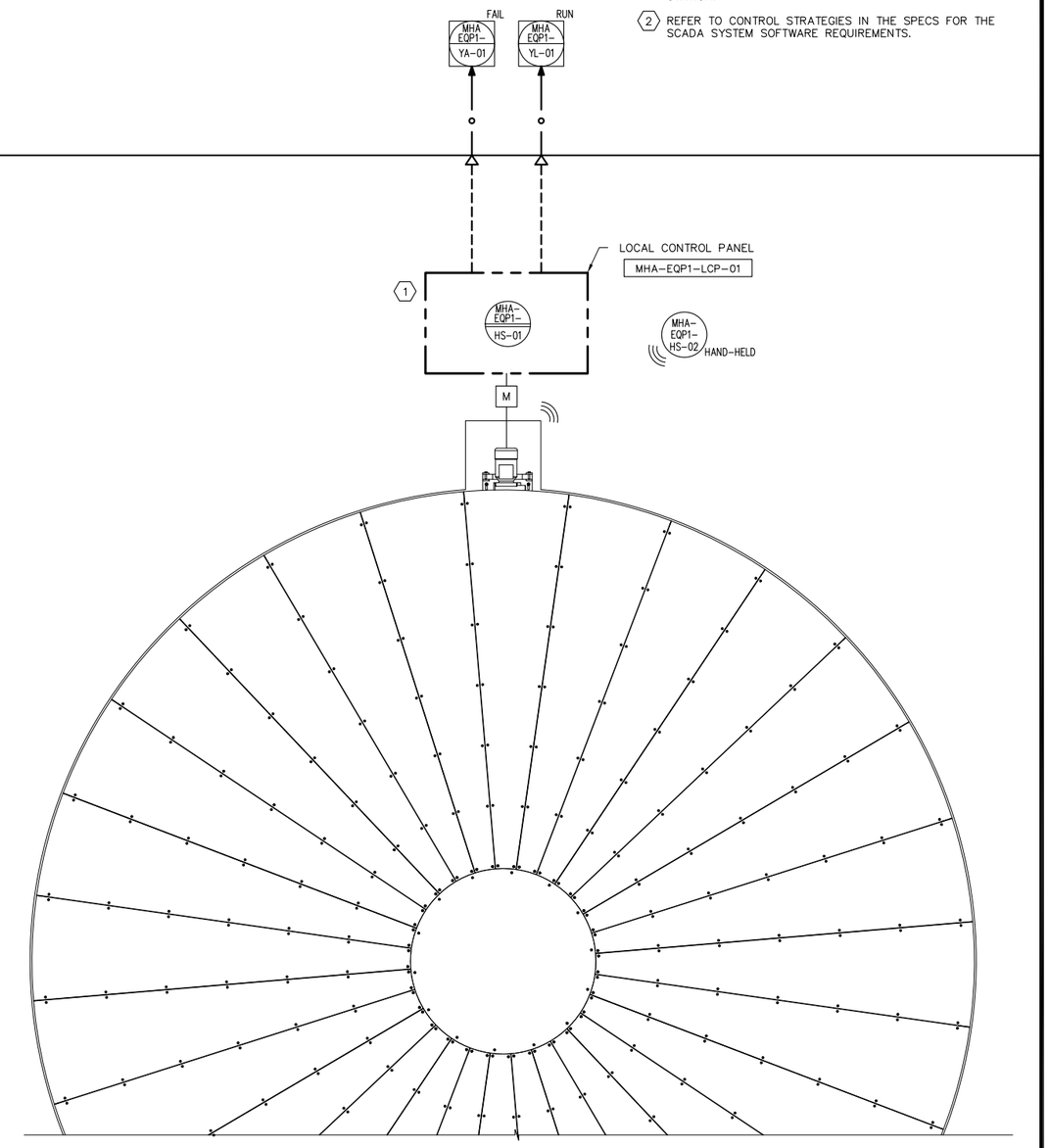

TRUCK TURNTABLE (B)
SCALE: NTS

REGISTERED PROFESSIONAL ENGINEER DIEP TAN NGUYEN No. E19317 ELECTRICAL STATE OF CALIFORNIA
11/18/16

0" 1" — VERIFY SCALES — BAR IS ONE INCH LONG ON FULL SIZE DRAWING. IF NOT ONE INCH LONG ON THIS DRAWING, ADJUST SCALES ACCORDINGLY

ENGINEERS, INC. Oakland, San Francisco, Orange County, Ca.

RMC water and environment

REV	DATE	BY	APVD	DESCRIPTION
1				
2				
3				
4				
5				

DESIGNED	TP
DRAWN	LD
CHECKED	DN

SUBMITTED: MARK TAKEMOTO
RMC PROJECT ENGINEER CE-64369

APPROVED: STEVE CLARY
RMC ENGINEER CE-30318

SAUSALITO · MARIN CITY SANITARY DISTRICT

TREATMENT AND WET WEATHER FLOW UPGRADE

P&ID SCREENING HANDLING AND TURNTABLE

DWG NO	I100-2
SHEET NO	217 OF 226
PROJ NO	055-006
DATE	NOVEMBER 2016

FILENAME: 286F_I100-2 11-18-16 09:18am LocDo || XREFS: | X-SMCSD-TBLK | MTakemoto-PE-stamp |<--

Last Saved By: LocDo 11-11-16 10:49am

SHEET NOTES:

1. THESE ARE TYPICAL CONTROL AND INSTRUMENTATION FUNCTIONS PROVIDED BY THE LOCAL CONTROL PANEL. REFER TO SPECIFICATIONS FOR DETAILS OF PACKAGED EQUIPMENT.
2. ANY STATUS AND ALARM FUNCTIONS AVAILABLE IN THE LOCAL CONTROL PANEL SHALL BE DUPLICATED DISPLAYED IN THE SCADA SYSTEM.
3. REFER TO CONTROL STRATEGIES IN THE SPECS FOR THE SCADA SYSTEM SOFTWARE REQUIREMENTS.

PLC/ HMI/ SCADA (3)

AUTO GRT PMP1- YL-01 | FAIL GRT PMP1- YA-01 | NO FLOW GRT PMP1- ZAL-01
RUN GRT PMP1- YL-02 | GRT PMP1- HS-01 | GRT PMP1- PAH-01

AUTO GRT PMP2- YL-01 | FAIL GRT PMP2- YA-01 | NO FLOW GRT PMP2- ZAL-01
RUN GRT PMP2- YL-02 | GRT PMP2- HS-01 | GRT PMP2- PAH-01

GC EQP1- UI (2)

DIGITAL LINK

GRIT WASHER CONTROL PANEL

(1) TYP
GC EQP1- YL-01 | GC EQP1- HS-01

LOCAL CONTROL PANEL
GC-EQP1-LCP-01

(4)

RUN GRT-PMP1-YL-01 | SS GRT-PMP1-HS-01 | HOA GRT-PMP1-HS-02 | GRT-PMP1-PAH-01

RUN GRT-PMP2-YL-02 | SS GRT-PMP2-HS-02 | HOA GRT-PMP2-HS-01 | GRT-PMP2-PAH-02

GRT-PMP1-PSH-01 | GRT-PMP1-PI-01 | GRT-1 PMP1-ZSL-01

GRT-PMP1-PVLV04-01 | GRT-PMP1-PVLV04-02

GRT PUMP No. 1
HW-GRT-PMP1

GRT-PMP1-PE-01

GRT-PMP1-CVLV04-01

2 I100-1 | 1 I100-2

GRT-PMP2-PVLV04-01

GRT PUMP No. 2
HW-GRT-PMP2

GRT-PMP2-PSH-01 | GRT-2 PMP2-PI-01 | GRT-2 PMP2-ZSL-01

GRT-PMP2-CVLV04-01 | GRT-PMP2-PVLV04-02

GRT-PMP2-PE-01

"SPEED LOW"

FA

TO ODOR CONTROL UNIT
SEE DRAWING M20-1

S NOTE 2 | W3 | GC-EQP1

GC EQP1- HS-01 | E-STOP | GC EQP1- ZS-01

GC EQP1 ZSH-01 | GC EQP1 ZSH-01 | GC EQP1 PE-01

GRIT WASHER PACKAGE

DUMPSTER
MHA-EQP2

TO INFLUENT

FILENAME: 286F_I100-3 11-18-16 09:18am LocDo || XREFS: X-SMCSD-TBLK | MTakemoto-PE-stamp |<<--

Last Saved By: LocDo 11-11-16 10:50am

REGISTERED PROFESSIONAL ENGINEER — CHEP TAN NGUYEN — No. E17004 — 6/30/17 — ELECTRICAL — STATE OF CALIFORNIA
11/18/16

0" 1" — VERIFY SCALES — BAR IS ONE INCH LONG ON FULL SIZE DRAWING. IF NOT ONE INCH LONG ON THIS DRAWING, ADJUST SCALES ACCORDINGLY

ENGINEERS, INC. Oakland, San Francisco, Orange County, Ca

RMC water and environment

REV	DATE	BY	APVD	DESCRIPTION

DESIGNED	TP
DRAWN	LD
CHECKED	DN

SUBMITTED: MARK TAKEMOTO, RMC PROJECT ENGINEER CE-64369

APPROVED: STEVE CLARY, RMC ENGINEER CE-30318

SAUSALITO · MARIN CITY SANITARY DISTRICT

TREATMENT AND WET WEATHER FLOW UPGRADE

P&ID
GRIT HANDLING INSTRUMENTATION

DWG NO	I100-3
SHEET NO	218 OF 226
PROJ NO	055-006
DATE	NOVEMBER 2016

SHEET NOTES:

1. REFER TO SPECIFICATIONS FOR REQUIRED LOGIC FOR THESE SOLENOID VALVES.
2. REFER TO CONTROL STRATEGIES IN THE SPECS FOR THE SCADA SYSTEM SOFTWARE REQUIREMENTS.

PLC/ HMI/ SCADA (2)

LR/OSC: EQ-GAT3-ZL-01, EQ-GAT1-ZL-01, EQ2-LAHH-01, EQ1-LI-01
OSC/LR: EQ-PMP1-BLV ZL-01, EQ-PMP1- HS-01, EQ-PMP1-BLV ZL-01
RUN: EQ-PMP1- YL-01, EQ-PMP1- SIC-01
AUTO: EQ-PMP1- YL-02, EQ-PMP1- PI-01
OSC/LR: EQ-PMP2-BLV HS-01
RUN: EQ-PMP2- YL-01, EQ-PMP2- SIC-01
AUTO: EQ-PMP2- YL-02, EQ-PMP2- PI-01
OSC/LR: EQ- FI-01, EQ-PVLV10-05 ZL-01, EQ-PVLV10-05 HS-01, EQ-PVLV10-06 ZL-01, EQ-PVLV10-06 HS-01

EQ-GAT1- ZL-01, EQ-GAT3- ZIC-01, EQ2-TRS1- ZL-01, EQ-GAT2- ZL-01, EQ2-TRS2- ZL-01, EQ2- LI-01, EQ1- LI-01, EQ2 SOL HS-01, EQ1- LAHH-01, EQ-PMP2-BLV ZL-01, EQ-PMP2- HS-01, EQ-PMP1-BLV HS-01, EQ-PMP1- PAL-01, EQ-PMP1- SI-01, EQ-PMP1- YA-01, EQ-PMP1- PAH-01, EQ-PMP2-BLV HS-01, EQ-PMP2- PAL-01, EQ-PMP2- SI-01, EQ-PMP2- YA-01, EQ-PMP2- PAH-01

(4) (2) (2) (5) (4) (4) (2) (2) (5) (3) (5) (3) (4) (2) (4) (2)

X (1)

EQ-GATE3- HS-01 LR
EQ-GATE3- ZIT-01, EQ-GATE3- HS-02 OSC, EQ-GATE3- ZIC-01 OSC, EQ-GAT1- ZS-01 OC, EQ-GAT2- ZS-01 OC

FROM PRIMARY INFLUENT CHANNEL
(8) I100-1 PI — M — EQ-GAT3

FROM INFLUENT DISTRIBUTION BOX
(7) I100-1 IN — EQ DISTRIBUTION BOX — EQS — EQ-GAT1
EQS — EQ-GAT2

EQ2-TRS1- ZS-01, EQ2-TRS2- ZS-01, EQ1-TRS1- ZS-01
EQ2-TRS1 — EQ2-TRS1-SVLV02-01 — S — 3W
EQ2-TRS2 — EQ2-TRS2-SVLV01-01 — S — 3W
EQ1-TRS1 — EQ1-TRS1-SVLV01-01 — S

EQUALIZATION STORAGE BASIN No. 1
EQUALIZATION STORAGE BASIN No. 2
EQ2- LSHH-01
EQ2- LIT-01, EQ2- LE-01
EQ1- LIT-01, EQ1- LE-01
EQ1- LSHH-01

EQ2-SVLV01-01 — S — 3W
EQ1-SVLV01-01 — S — 3W

EQ-PMP1- PAL-01, EQ-PMP1- HS-01 SS, EQ-PMP1- SIC-01, EQ-PMP1- HS-01 HOA, EQ-PMP1- PAH-01
EQ-PMP1- YL-01 RUN, EQ-PMP1- YA-01 VFD, FAIL
MCC

EQ-PMP2- PAL-01, EQ-PMP2- HS-01 SS, EQ-PMP2- SIC-01, EQ-PMP2- HS-01 HOA, EQ-PMP2- PAH-01
EQ-PMP2- YL-01 RUN, EQ-PMP2- YA-01 VFD, FAIL
MCC

EQ-PMP1- PSL-01, EQ-PMP1- PI-01
EQ-PMP1- PI-01, EQ-PMP1- PSH-01, EQ-PMP1- PIT-01

EQ-PMP1-PVLV10-01 HS-01 OSC, EQ-PMP1-PVLV10-01 HS-02 LR
EQ-PMP1-PVLV10-01 ZSH-01, EQ-PMP1-PVLV10-01 ZSL-01
M — EQ-PMP1-PVLV10-01

EQ-PMP1-PVLV10-02 HS-01 OSC, EQ-PMP1-PVLV10-02 HS-02 LR
EQ-PMP1-PVLV10-02 ZSH-01, EQ-PMP1-PVLV10-02 ZSL-01
M — EQ-PMP1-PVLV10-02

EQ PUMP No. 1 — EQ-PMP1
EQ-PMP1-AVLV10-01
EQ-PMP1-CVLV10-01
EQ-PMP1-PVLV10-03

EQ-PMP2-PVLV10-02 HS-01 OSC, EQ-PMP2-PVLV10-02 HS-02 LR
EQ-PMP2-PVLV10-02 ZSH-01, EQ-PMP2-PVLV10-02 ZSL-01
M — EQ-PMP2-PVLV10-02

EQ-PMP2-PVLV10-01 HS-01 OSC, EQ-PMP2-PVLV10-01 HS-02 LR
EQ-PMP2-PVLV10-01 ZSH-01, EQ-PMP2-PVLV10-01 ZSL-01
M — EQ-PMP2-PVLV10-01

EQ-PMP2- PSL-01, EQ-PMP2- PI-01
EQ-PMP2- PE-01, EQ-PMP2- PSH-01, EQ-PMP2- PIT-01
M
EQ PUMP No. 2 — EQ-PMP2
EQ-PMP2-AVLV10-01
EQ-PMP2-CVLV10-01
EQ-PMP2-PVLV10-03

EQ-PVLV10- FE-01, EQ-PVLV10- FIT-01
EQ-PVLV10-01 — 10" — EQ-PVLV10-02
EQ-FLW1-FIT-01
EQ-PVLV10-03

EQ-PVLV10-05 HS-01 OSC, EQ-PVLV10-05 HS-02 LR
EQ-PVLV10-05 ZSH-01, EQ-PVLV10-05 ZSL-02
M — EQ-PVLV10-05

EQ-PVLV10-04 HS-01 OSC, EQ-PVLV10-04 HS-02 LR
EQ-PVLV10-04 ZSH-01, EQ-PVLV10-04 ZSL-01
M — EQ-PVLV10-04

FROM PLANT RETURN PUMP STATION — R
BW — I400-2 (1) — FROM DISK FILTERS
EQ-GAT5 — HEADWORKS RETURN BOX — EQ-GAT4 — EQR — I100-1 (2) — TO HEADWORKS
FA — TO ODOR CONTROL UNIT SEE DRAWING M20-1
EQR
TO DIVERSION STRUCTURE — PE — I300-1 (1)

FROM PRIMARY CLARIFIER No. 2 (1) I200-1

IN/PI
PE
3W

REGISTERED PROFESSIONAL ENGINEER — DIEP TAN NGUYEN — No. E17008 — 8/30/17 — ELECTRICAL — STATE OF CALIFORNIA
11/18/16

0" 1" — VERIFY SCALES — BAR IS ONE INCH LONG ON FULL SIZE DRAWING. IF NOT ONE INCH LONG ON THIS DRAWING, ADJUST SCALES ACCORDINGLY

ENGINEERS, INC. Oakland, San Francisco, Orange County, Ca.

RMC water and environment

REV	DATE	BY	APVD	DESCRIPTION

DESIGNED	TP
DRAWN	LD
CHECKED	DN

SUBMITTED: MARK TAKEMOTO, RMC PROJECT ENGINEER CE-64369
APPROVED: STEVE CLARY, RMC ENGINEER CE-30318

SAUSALITO · MARIN CITY SANITARY DISTRICT

TREATMENT AND WET WEATHER FLOW UPGRADE

P&ID
EQUALIZATION INSTRUMENTATION

DWG NO	1100-4
SHEET NO	219 OF 226
PROJ NO	055-006
DATE	NOVEMBER 2016

FILENAME: 286F_1100-4 11-18-16 09:18am LocDo || XREFS: X-SMCSD-TBLK | MTakemoto-PE-stamp |<<--

Last Saved By: LocDo 11-11-16 10:52am

SHEET NOTES:

1. REFER TO CONTROL STRATEGIES IN THE SPECS FOR THE SCADA SYSTEM SOFTWARE REQUIREMENTS.

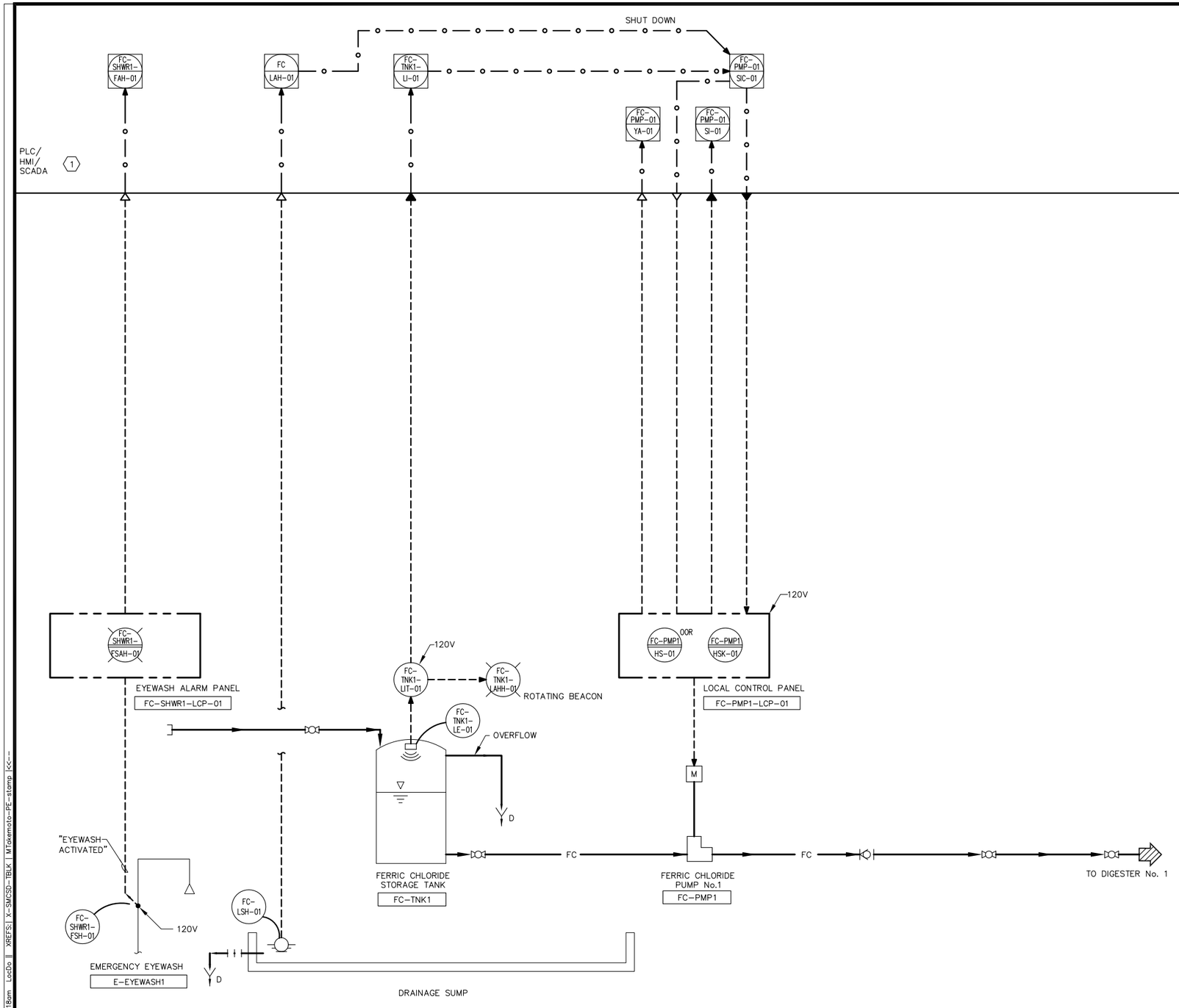

FERRIC CHLORIDE (A)

SCALE: NTS

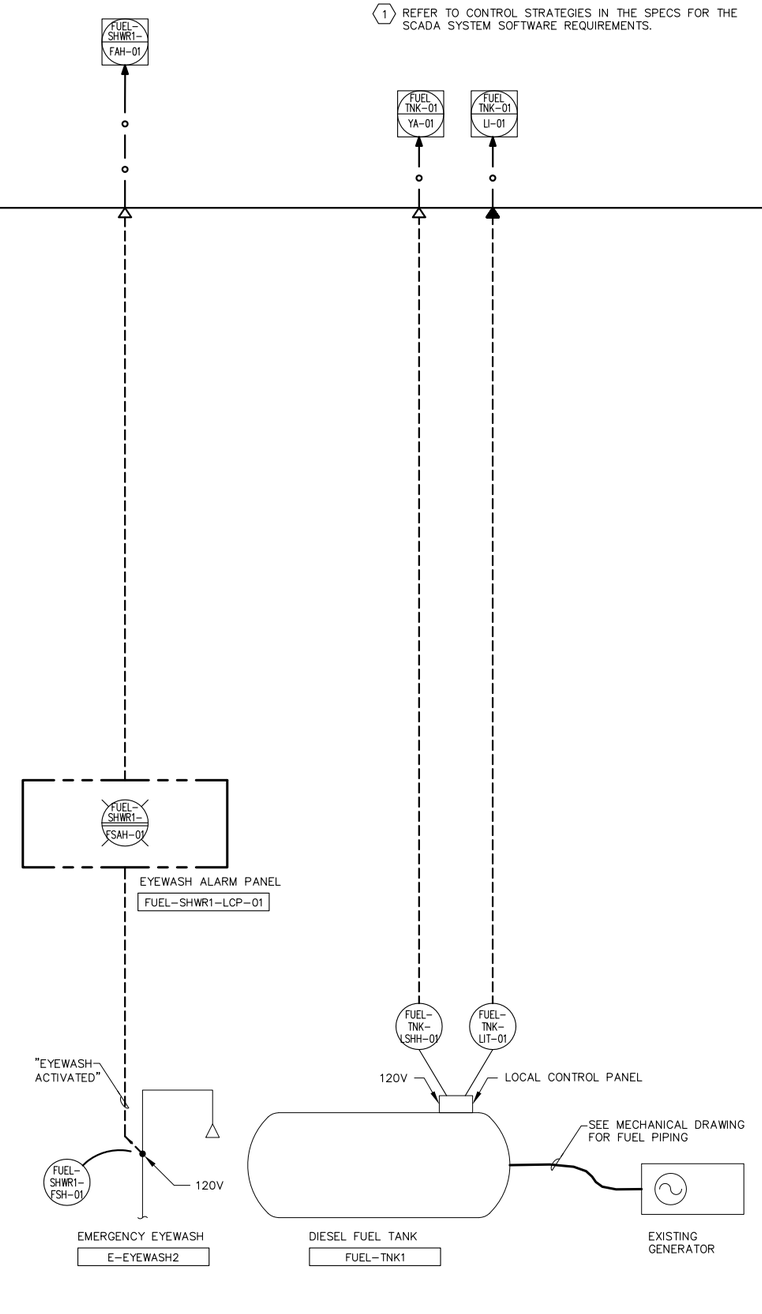

DIESEL FUEL TANK (B)

SCALE: NTS

REGISTERED PROFESSIONAL ENGINEER — DIEP TAN NGUYEN — No. E17668 — 6/30/17 — ELECTRICAL — STATE OF CALIFORNIA

11/18/16

0" 1" — VERIFY SCALES — BAR IS ONE INCH LONG ON FULL SIZE DRAWING. IF NOT ONE INCH LONG ON THIS DRAWING, ADJUST SCALES ACCORDINGLY

ENGINEERS, INC. Oakland, San Francisco, Orange County, Ca.

RMC water and environment

REV	DATE	BY	APVD	DESCRIPTION
1				
2				
3				
4				
5				

DESIGNED	TP
DRAWN	LD
CHECKED	DN

SUBMITTED: MARK TAKEMOTO, RMC PROJECT ENGINEER CE-64369

APPROVED: STEVE CLARY, RMC ENGINEER CE-30318

SAUSALITO · MARIN CITY SANITARY DISTRICT

TREATMENT AND WET WEATHER FLOW UPGRADE

P&ID FERRIC CHLORIDE SYSTEM AND DIESEL FUEL TANK

DWG NO	1100-5
SHEET NO	220 OF 226
PROJ NO	055-006
DATE	NOVEMBER 2016

FILENAME: 286F_1100-5 11-18-16 09:18am LocDo || XREFS:| X-SMCSD-TBLK | MTakemoto-PE-stamp |<<--

Last Saved By: LocDo 11-11-16 10:53am

SHEET NOTES:

1. SCUM SOLENOID VALVE SHALL OPEN (0 TO 120 SECOND ADJUSTABLE) BEFORE EITHER PUMP STARTS AND SHALL SHUT OFF AFTER A TIME DELAY (0 TO 120 SECOND) AFTER EITHER PUMP STOPS.
2. THE SKIMMER ARM SHALL TRIGGER A TIMER TO OPEN THE SOLENOID VALVE FOR AND ADJUSTABLE TIME (0 TO 120 SECOND) INITIALLY SET AT 60 SECONDS.
3. REFER TO CONTROL STRATEGIES IN THE SPECS FOR THE SCADA SYSTEM SOFTWARE REQUIREMENTS.

PLC/ HMI/ SCADA (3)

PC2-LIC-01 | PC2-LI-01 | PC2-LALL

SHUT OFF | FAIL | PC2-PMP1-YA-01

PC2-DRV1-NAH-01 | PC2-DRV1-NAHH-01 | PC2-DRV1-HS-01 | PC2-DRV1-YL-01 | PC2-DRV1-YL-02 | PC2-DRV1-YA-01 (RUN / AUTO / FAIL)

PC2-PMP1-YL-01 | PC2-PMP1-PAL-01 | PC2-PMP1-HS-02 | PC2-PMP1-YL-01 | PC2-PMP1-PAH-01 (RUN / HOA)

PC2-PMP1-FI-01

SHUT OFF | FAIL | PC2-PMP2-YA-01

PC2-PMP2-YL-01 | PC2-PMP2-PAL-01 | PC2-PMP2-HS-02 | PC2-PMP2-YL-01 | PC2-PMP2-PAH-01 (RUN / HOA)

PC2-PMP2-FI-01

PRIMARY CLARIFIER NO. 2 CONTROL PANEL

LOCAL CONTROL PANEL
PC2-DRV1-LCP-01

PC2-PMP1-YL-01 (RUN) | PC2-PMP1-PAL-01 | PC2-PMP1-SIC-01 (SS / RVSS) | PC2-PMP1-HS-01 (HOA) | PC2-PMP1-PAH-01

MCC

PC2-PMP2-YL-01 (RUN) | PC2-PMP2-PAL-01 | PC2-PMP2-SIC-01 (SS / RVSS) | PC2-PMP2-HS-01 (HOA) | PC2-PMP2-PAH-01

MCC

PC2-DRV1-NSH-01 | PC2-DRV1-NSHH-01 | PC2-DRV1-ZSH-01 (SHEAR PIN)

W3

PC2-LE-01 | PC2-LIT-01 | BUBBLER PANEL

PC2-SVLV01-02 | PC2-SVLV01-01

PRIMARY CLARIFIER DRIVE MECHANISM #2
PC2-DRV1

SKIMMER ARM
PC2-DRV1-ZSH-01

PC2-LSLL-01

PC2-GAT1

FA → TO ODOR CONTROL UNIT SEE DRAWING M20-1

PE → I100-4 (1)

1 I100-1

PI

SCUM | PS

PC2-PMP1-PVLV04-01 | PC2-PMP1-PVLV04-02

PC2-PMP2-PVLV04-01 | PC2-PMP2-PVLV04-02

PS/SCUM

PC2-PMP1-PSL-01 | PC2-PMP1-PI-01 | PC2-PMP1-PE-01

PC2-PMP1-PE-02 | PC2-PMP1-PI-02 | PC2-PMP1-PSH-01

PRIMARY SLUDGE/SCUM PUMP No. 1
PC2-PMP1

PC2-PMP1-CVLV04-01

PC2-PMP1-FIT-01 | PC2-PMP1-PVLV04-05 | PC2-PMP1-PVLV04-03 | PC2-PMP1-PVLV04-04 | 6"

PC2-PMP2-PSL-01 | PC2-PMP2-PI-01 | PC2-PMP2-PE-01

PC2-PMP2-PE-02 | PC2-PMP2-PI-02 | PC2-PMP2-PSH-02

PRIMARY SLUDGE/SCUM PUMP No. 2
PC2-PMP2

PC2-PMP2-CVLV04-01

PC2-PMP2-FIT-01 | PC2-PMP2-PVLV04-05 | PC2-PMP2-PVLV04-03 | PC2-PMP2-PVLV04-04 | 6"

TO DIGESTER

REGISTERED PROFESSIONAL ENGINEER — DEP TAN NGUYEN — No. E17004 — 6/30/17 — ELECTRICAL — STATE OF CALIFORNIA

11/18/16

0" — 1" — VERIFY SCALES — BAR IS ONE INCH LONG ON FULL SIZE DRAWING. IF NOT ONE INCH LONG ON THIS DRAWING, ADJUST SCALES ACCORDINGLY

ENGINEERS, INC. Oakland, San Francisco, Orange County, Ca

RMC water and environment

REV	DATE	BY	APVD	DESCRIPTION

DESIGNED	TP
DRAWN	LD
CHECKED	DN

SUBMITTED: MARK TAKEMOTO — RMC PROJECT ENGINEER CE-64369

APPROVED: STEVE CLARY — RMC ENGINEER CE-30318

SAUSALITO · MARIN CITY SANITARY DISTRICT

TREATMENT AND WET WEATHER FLOW UPGRADE

P&ID
PRIMARY CLARIFIER #2 AND SLUDGE/SCUM PUMPING

DWG NO	I200-1
SHEET NO	221 OF 226
PROJ NO	055-006
DATE	NOVEMBER 2016

FILENAME: 286F_I200-1 11-18-16 09:18am LocDo || XREFS:| X-SMCSD-TBLK | MTakemoto-PE-stamp |<<--

Last Saved By: LocDo 11-11-16 10:53am

SHEET NOTES:

1. SOME OF THESE SIGNALS ARE EXISTING. REFER TO ELECTRICAL SCHEMATIC DIAGRAM ON DRAWING E-4 FOR EXACT QUANTITY & IDENTIFICATION OF NEW SIGNALS REQUIRED.
2. REFER TO CONTROL STRATEGIES IN THE SPECS FOR THE SCADA SYSTEM SOFTWARE REQUIREMENTS.
3. THESE EXISTING VFDs LOCATED IN EXISTING ELECTRICAL ROOM SHALL BE MODIFIED AS PER DETAILS SHOWN ON DRAWING E-4.

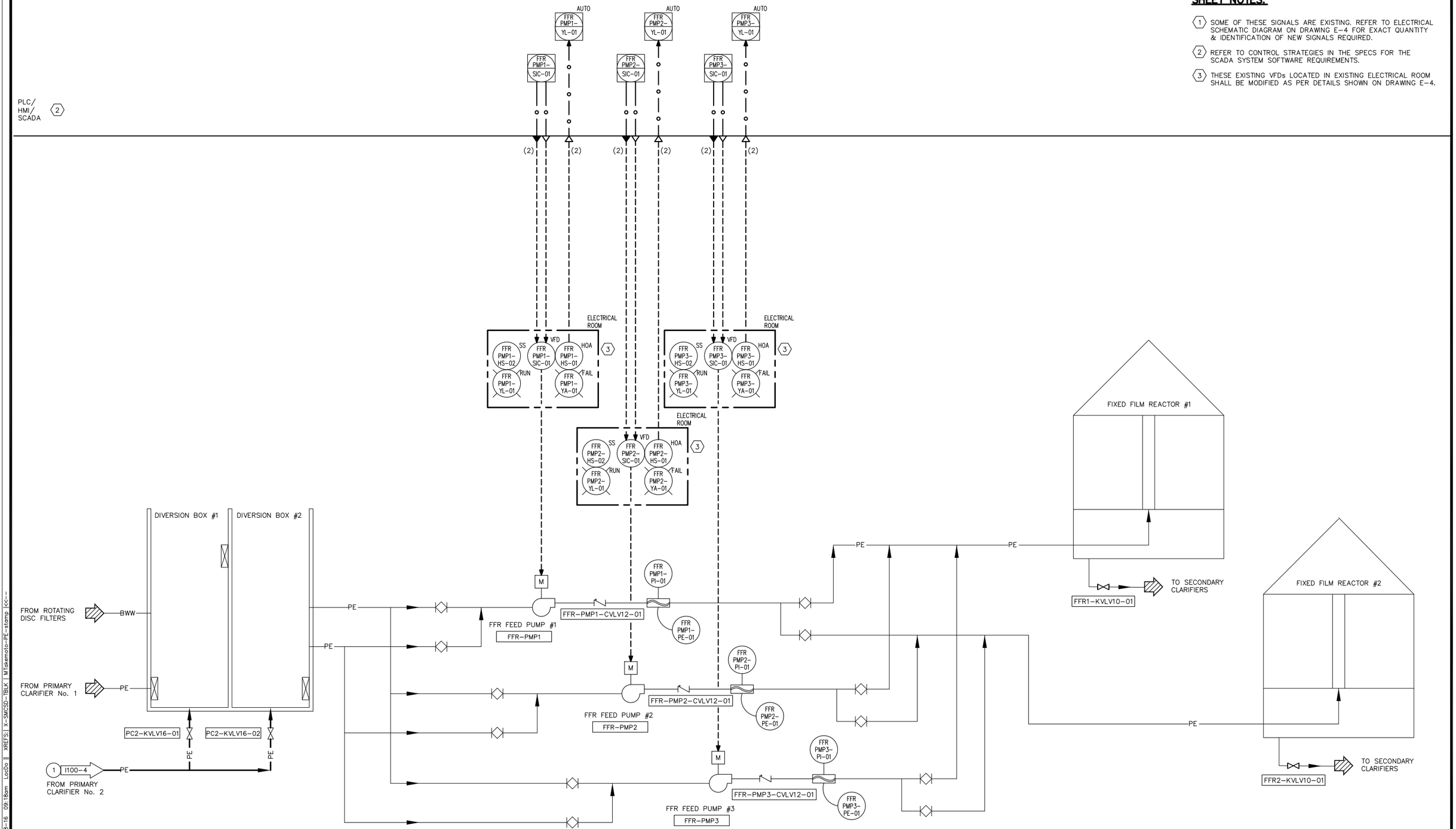

FILENAME: 286F_1300-1 11-18-16 09:18am LocDo || XREFS: | X-SMCSD-TBLK | MTakemoto-PE-stamp |<<--

REGISTERED PROFESSIONAL ENGINEER — DIEP TAN NGUYEN — No. E17008 — 6/30/17 — ELECTRICAL — STATE OF CALIFORNIA
11/18/16

0" 1" — VERIFY SCALES — BAR IS ONE INCH LONG ON FULL SIZE DRAWING. IF NOT ONE INCH LONG ON THIS DRAWING, ADJUST SCALES ACCORDINGLY

ENGINEERS, INC. Oakland, San Francisco, Orange County, Ca.

RMC water and environment

REV	DATE	BY	APVD	DESCRIPTION

DESIGNED	TP
DRAWN	LD
CHECKED	DN

SUBMITTED: MARK TAKEMOTO, RMC PROJECT ENGINEER CE-64369

APPROVED: STEVE CLARY, RMC ENGINEER CE-30318

SAUSALITO · MARIN CITY SANITARY DISTRICT

TREATMENT AND WET WEATHER FLOW UPGRADE

P&ID
FIXED FILM REACTOR SUPPLY PUMPING

DWG NO	1300-1
SHEET NO	222 OF 226
PROJ NO	055-006
DATE	NOVEMBER 2016

Last Saved By: LocDo 11-11-16 10:53am

SHEET NOTES:

1. REFER TO CONTROL STRATEGIES IN THE SPECS FOR THE SCADA SYSTEM SOFTWARE REQUIREMENTS.

LOW LEVEL SHUTOFF

PLC/ HMI/ SCADA (1)

FIL-PMP1-TAH-01 | FIL-PMP1-SI-01 | FIL-PMP1-MAH-01 | FIL-PMP1-SIC-01 | FIL-PMP1-YL-02 (AUTO) | FIL-PMP1-YL-01 (RUN) | FIL-PMP1-YA-01 (FAIL)

FIL-PMP2-TAH-01 | FIL-PMP2-SI-01 | FIL-PMP2-MAH-01 | FIL-PMP2-SIC-01 | FIL-PMP2-YL-02 (AUTO) | FIL-PMP2-YL-01 (RUN) | FIL-PMP2-YA-01 (FAIL)

FIL-PMP3-TAH-01 | FIL-PMP3-SI-01 | FIL-PMP3-MAH-01 | FIL-PMP3-SIC-01 | FIL-PMP3-YL-02 (AUTO) | FIL-PMP3-YL-01 (RUN) | FIL-PMP3-YA-01 (FAIL)

FIL-BFV10-01 ZL-01 (LR/OSC) | FIL-BFV10-01 ZIC-01 | FIL-BFV10-01 ZIT-01

FIL-LAL-01 | FIL-LALL-01 | FIL-LAHH-01 | FIL-LAH-01

FIL-GAT1-ZIC-01 | FIL-GAT1-ZL-01 (LR/OSC) | FIL-GAT1-ZI-01

FIL-FIC-01 | FIL-FI-01

(4)

FILTER FEED PUMP LOCAL CONTROL PANEL
FIL-PMP-LCP-01

FIL-PMP1-MAH-01 | FIL-PMP1-SIC-01 (VFD) | FIL-PMP1-HS-01 (SS) | FIL-PMP1-HS-02 (HOA) | FIL-PMP1-TAH-01 | FIL-PMP1-YL-01 (RUN) | FIL-PMP1-YA-01 (FAIL)

FIL-PMP2-MAH-01 | FIL-PMP2-SIC-01 (VFD) | FIL-PMP2-HS-01 (SS) | FIL-PMP2-HS-02 (HOA) | FIL-PMP2-TAH-01 | FIL-PMP2-YL-01 (RUN) | FIL-PMP2-YA-01 (FAIL)

FIL-PMP3-MAH-01 | FIL-PMP3-SIC-01 (VFD) | FIL-PMP3-HS-01 (SS) | FIL-PMP3-HS-02 (HOA) | FIL-PMP3-TAH-01 | FIL-PMP3-YL-01 (RUN) | FIL-PMP3-YA-01 (FAIL)

SHUT DOWN (PMP1) | SHUT DOWN (PMP2) | SHUT DOWN (PMP3)

FIL-BFV10-01 HS-01 (LR) | FIL-BFV10-01 HS-02 (OSC) | FIL-BFV10-01 ZIC-01 | FIL-BFV10-01 ZIT-01

FIL-PMP1-PI-01 | FIL-PMP1-PE-01 | FIL-PMP1-BFLV10-01 | FIL-PMP1-CVLV10-01

FIL-PMP2-PI-01 | FIL-PMP2-PE-01 | FIL-PMP2-BFLV10-01 | FIL-PMP2-CVLV10-01

FIL-PMP3-PI-01 | FIL-PMP3-PE-01 | FIL-PMP3-BFLV10-01 | FIL-PMP3-CVLV10-01

SE | M | FIL-BFV10-01

SE | FIL-BFLV16-01 | 12" | FLOWMETER FIL-FIT-01 | FIL-FIT-01 | FIL-FE-01 | 1400-2 (1)

SE | FIL-BFLV12-01 | 1400-2 (3)

FIL-GAT1-HS-01 (LR) | FIL-GAT1-HS-02 (OSC) | FIL-GAT1-ZIC-01 | FIL-GAT1-ZIT-01

M | MOTORIZED WEIR GATE | FIL-GAT1

FIL-LSHH-01 | FIL-LSH-01 | FIL-LSL-01 | FIL-LSLL-01

FIL-LIT-01 | FIL-LE-01

FROM SECONDARY CLARIFIERS | SE

FILTER FEED PUMP #1 | FIL-PMP1 (FIL-PMP1-TSH-01, FIL-PMP1-MSH-01)

FILTER FEED PUMP #2 | FIL-PMP2 (FIL-PMP2-TSH-01, FIL-PMP2-MSH-01)

FILTER FEED PUMP #3 | FIL-PMP3 (FIL-PMP3-TSH-01, FIL-PMP3-MSH-01)

FILTER PUMP STATION WET WELL

FILTER INFLUENT PIT

SE | FROM SECONDARY CLARIFIERS

SE | 1400-2 (2)

REGISTERED PROFESSIONAL ENGINEER DIEP TAN NGUYEN No. E17008 ELECTRICAL STATE OF CALIFORNIA 6/30/17

11/18/16

0" — 1" VERIFY SCALES — BAR IS ONE INCH LONG ON FULL SIZE DRAWING. IF NOT ONE INCH LONG ON THIS DRAWING, ADJUST SCALES ACCORDINGLY

ENGINEERS, INC. Oakland, San Francisco, Orange County, Ca.

RMC water and environment

REV	DATE	BY	APVD	DESCRIPTION

DESIGNED	TP
DRAWN	LD
CHECKED	DN

SUBMITTED: MARK TAKEMOTO, RMC PROJECT ENGINEER CE-64369

APPROVED: STEVE CLARY, RMC ENGINEER CE-30318

SAUSALITO • MARIN CITY SANITARY DISTRICT

TREATMENT AND WET WEATHER FLOW UPGRADE

P&ID
TERTIARY FILTER/PUMPING

DWG NO	1400-1
SHEET NO	223 OF 226
PROJ NO	055-006
DATE	NOVEMBER 2016

FILENAME: 286F_1400-1 11-18-16 09:18am LocDo || XREFS:| X-SMCSD-TBLK | MTakemoto-PE-stamp |<<--

Last Saved By: LocDo 11-11-16 10:54am

SHEET NOTES:

1. THESE ARE TYPICAL CONTROL AND INSTRUMENTATION FUNCTIONS PROVIDED BY THE LOCAL CONTROL PANEL. REFER TO SPECIFICATIONS FOR DETAILS OF PACKAGED EQUIPMENT.
2. ANY STATUS AND ALARM FUNCTIONS AVAILABLE IN THE LOCAL CONTROL PANEL SHALL BE DUPLICATED DISPLAYED IN THE SCADA SYSTEM.
3. REFER TO CONTROL STRATEGIES IN THE SPECS FOR THE SCADA SYSTEM SOFTWARE REQUIREMENTS.

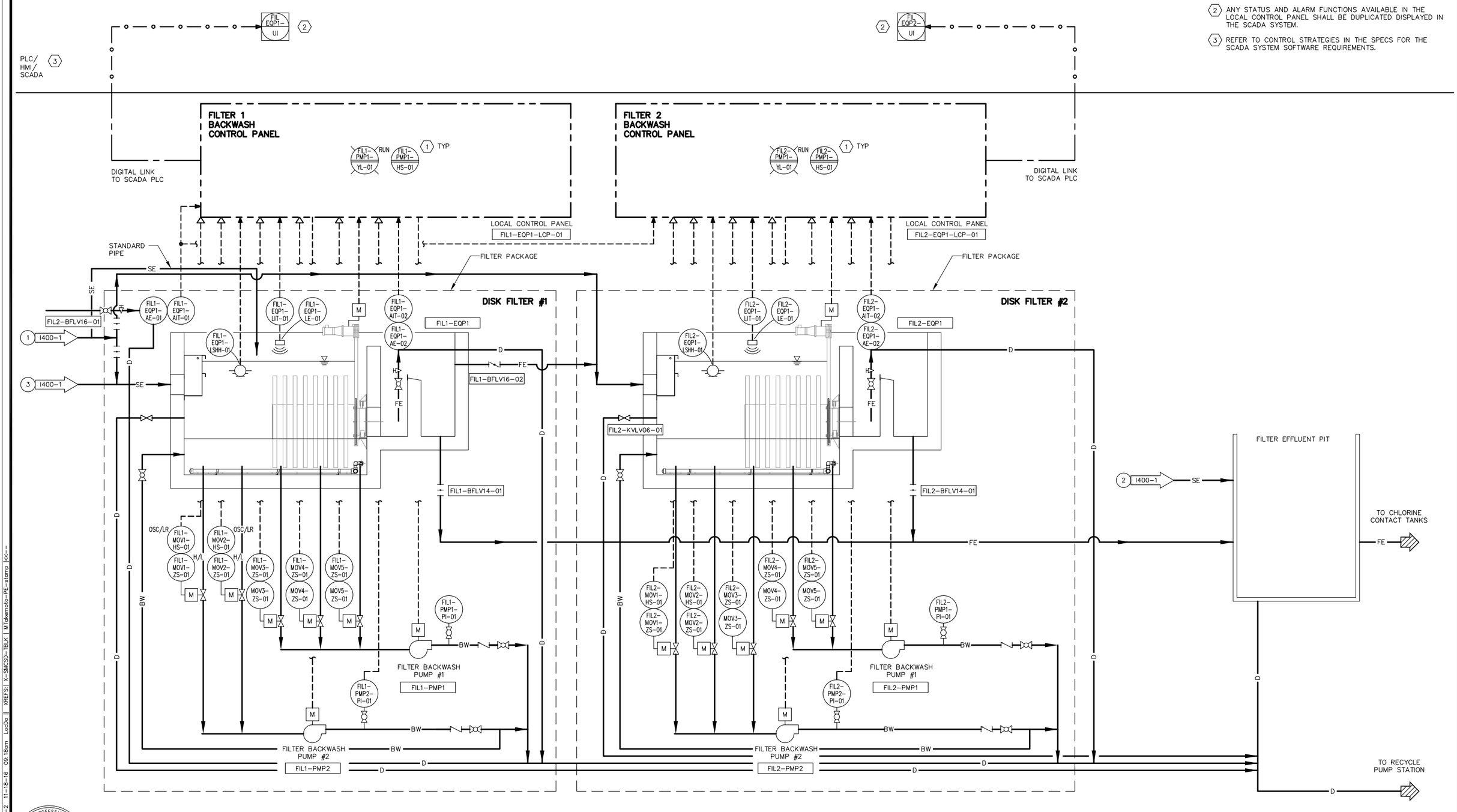

0" — 1" VERIFY SCALES — BAR IS ONE INCH LONG ON FULL SIZE DRAWING. IF NOT ONE INCH LONG ON THIS DRAWING, ADJUST SCALES ACCORDINGLY	ENGINEERS, INC. Oakland, San Francisco, Orange County, CA	RMC water and environment	REV	DATE	BY	APVD	DESCRIPTION

DESIGNED	TP
DRAWN	LD
CHECKED	DN

SUBMITTED: MARK TAKEMOTO, RMC PROJECT ENGINEER CE-64369

APPROVED: STEVE CLARY, RMC ENGINEER CE-30318

SAUSALITO · MARIN CITY SANITARY DISTRICT

TREATMENT AND WET WEATHER FLOW UPGRADE

P&ID
TERTIARY FILTER PACKAGES

DWG NO	I400-2
SHEET NO	224 OF 226
PROJ NO	055-006
DATE	NOVEMBER 2016

REGISTERED PROFESSIONAL ENGINEER DIEP TAN NGUYEN No. E10581 Exp. 6/30/17 ELECTRICAL STATE OF CALIFORNIA 11/18/16

FILENAME: 286F_I400-2 11-18-16 09:18am LocDo || XREFS: | X-SMCSD-TBLK | MTakemoto-PE-stamp |<<--

Last Saved By: LocDo 11-11-16 10:55am

SHEET NOTES:

1. REFER TO CONTROL STRATEGIES IN THE SPECS FOR THE SCADA SYSTEM SOFTWARE REQUIREMENTS.

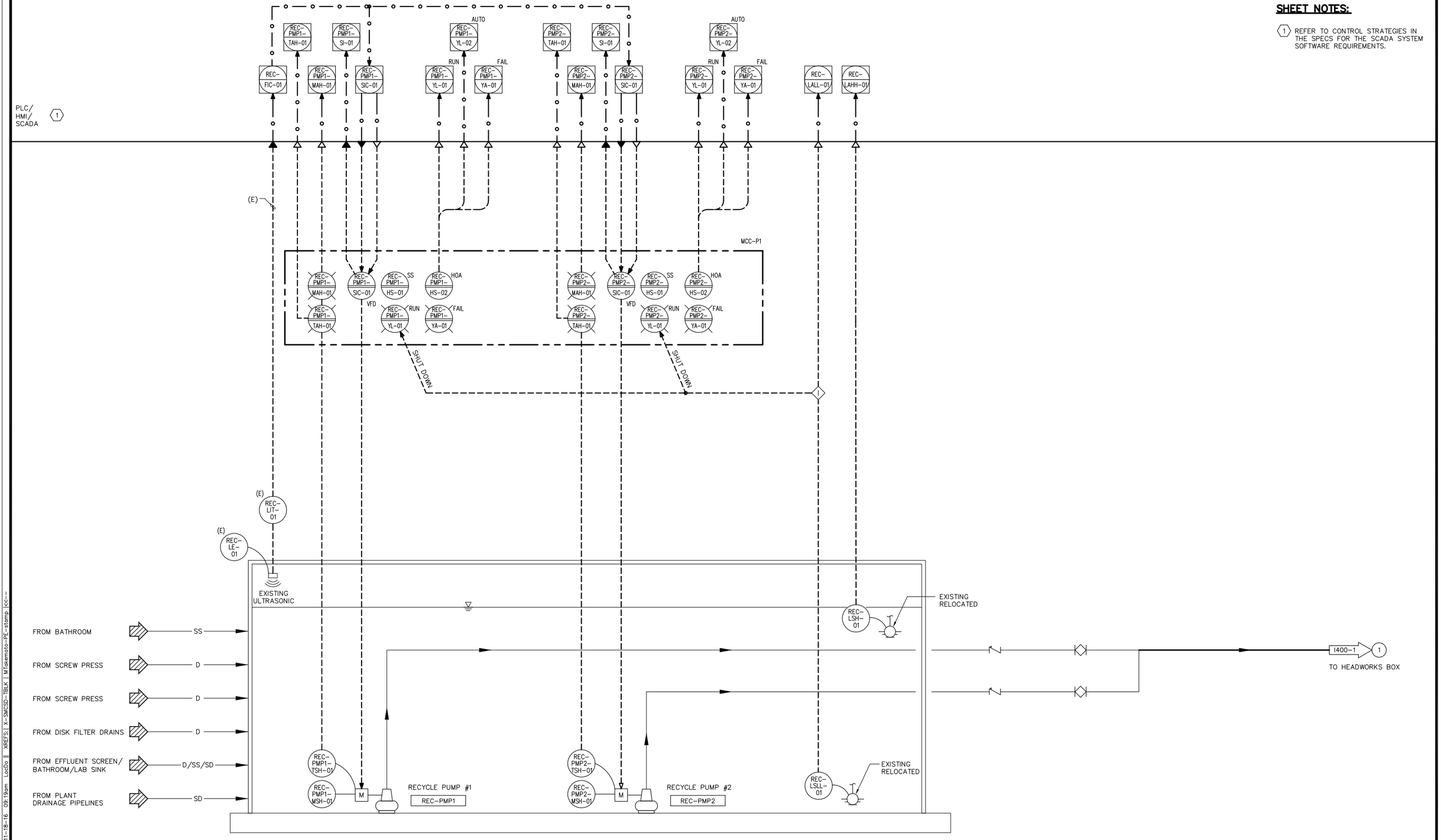

FILENAME: 286F_1500-1 11-18-16 09:19am LocDo ‖ XREFS:‖ X-SMCSD-TBLK | MTakemoto-PE-stamp |<<--

REGISTERED PROFESSIONAL ENGINEER — DIEP TAN NGUYEN — No. E17668 — ELECTRICAL — STATE OF CALIFORNIA
11/18/16

0" 1" — VERIFY SCALES — BAR IS ONE INCH LONG ON FULL SIZE DRAWING. IF NOT ONE INCH LONG ON THIS DRAWING, ADJUST SCALES ACCORDINGLY

ENGINEERS, INC. Oakland, San Francisco, Orange County, Ca.

RMC water and environment

REV	DATE	BY	APVD	DESCRIPTION

DESIGNED	TP
DRAWN	LD
CHECKED	DN

SUBMITTED: MARK TAKEMOTO, RMC PROJECT ENGINEER CE-64369

APPROVED: STEVE CLARY, RMC ENGINEER CE-30318

SAUSALITO · MARIN CITY SANITARY DISTRICT

TREATMENT AND WET WEATHER FLOW UPGRADE

P&ID
RECYCLE PUMP STATION

DWG NO	1500-1
SHEET NO	225 OF 226
PROJ NO	055-006
DATE	NOVEMBER 2016

Last Saved By: LocDo 11-11-16 10:56am

SHEET NOTES:

1. REFER TO CONTROL STRATEGIES IN THE SPECS FOR THE SCADA SYSTEM SOFTWARE REQUIREMENTS.

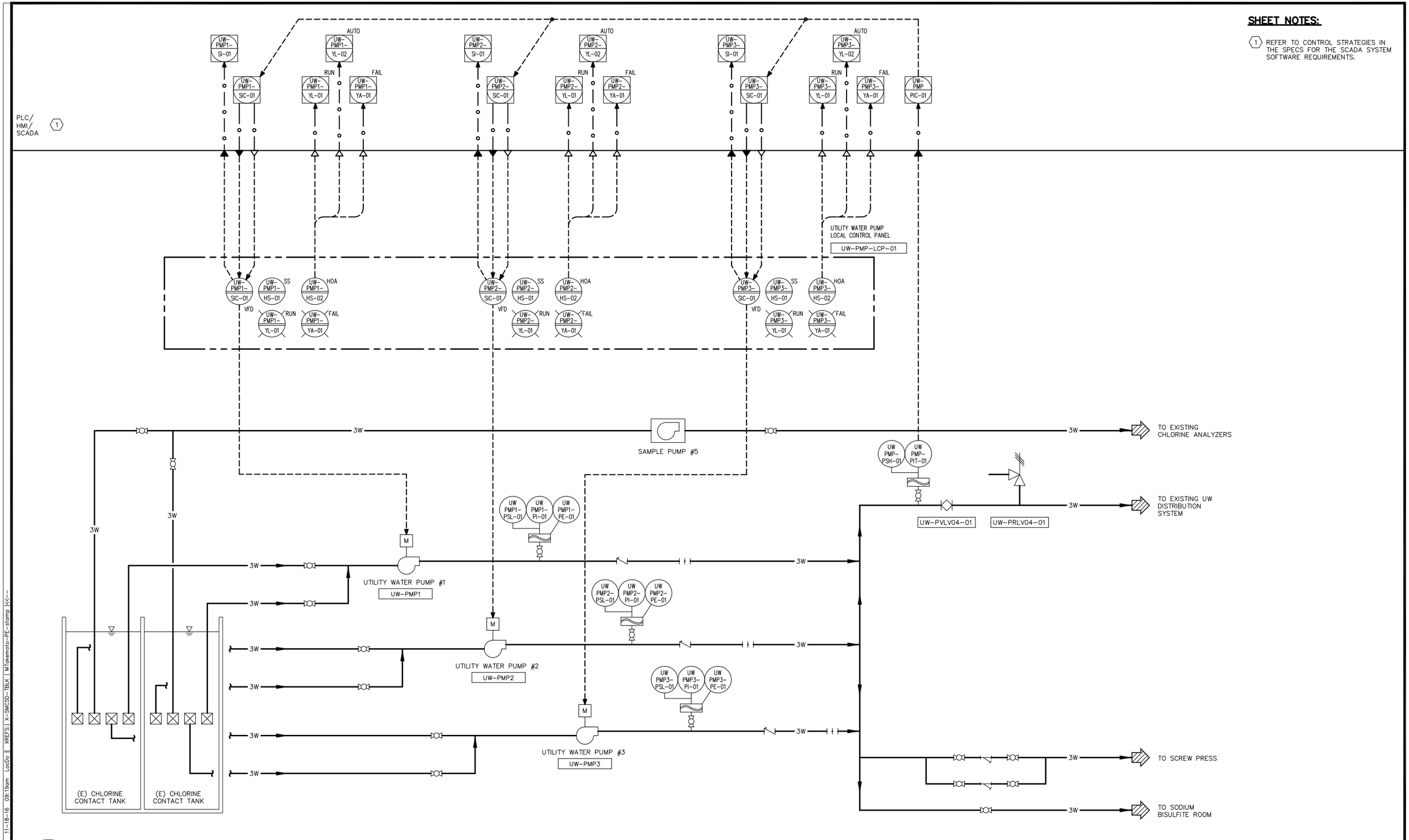

FILENAME: 286F_I600-1 11-18-16 09:19am LocDo || XREFS:| X-SMCSD-TBLK | MTakemoto-PE-stamp |<<--

REGISTERED PROFESSIONAL ENGINEER DIEP TAN NGUYEN No. E-10601 Exp. 6/30/17 ELECTRICAL STATE OF CALIFORNIA

11/18/16

0" 1"
— VERIFY SCALES —
BAR IS ONE INCH LONG ON FULL SIZE DRAWING. IF NOT ONE INCH LONG ON THIS DRAWING, ADJUST SCALES ACCORDINGLY

ENGINEERS, INC.
Oakland, San Francisco, Orange County, CA

RMC water and environment

REV	DATE	BY	APVD	DESCRIPTION
△				
△				
△				
△				
△				

DESIGNED	TP
DRAWN	LD
CHECKED	DN

SUBMITTED: MARK TAKEMOTO
RMC PROJECT ENGINEER CE-64369

APPROVED: STEVE CLARY
RMC ENGINEER CE-30318

SAUSALITO · MARIN CITY SANITARY DISTRICT

TREATMENT AND WET WEATHER FLOW UPGRADE

P&ID
UTILITY WATER PUMP STATION

DWG NO	I600-1
SHEET NO	226 OF 226
PROJ NO	055-006
DATE	NOVEMBER 2016

Last Saved By: LocDo 11-11-16 10:56am