# LEGENDS

## ABBREVIATIONS

| | |
|---|---|
| A | AMPERES |
| AC | ALTERNATING CURRENT |
| ALT. | ALTERNATE |
| AR | ALARM RELAY |
| AUTO. | AUTOMATIC |
| AUX. | AUXILIARY |
| BCG | BARE COPPER GROUND |
| BD. | BOARD |
| BLDG. | BUILDING |
| C | CONDUIT |
| CHLO. | CHLORINATOR |
| CKT. | CIRCUIT |
| CONT. | CONTINUATION, CONTINUED |
| COMP. | COMPRESSOR |
| CTRL. | CONTROL |
| CR | CONTROL RELAY |
| CT | CURRENT TRANSFORMER |
| CS | CONTROL STATION |
| DC | DIRECT CURRENT |
| DISC. | DISCONNECT |
| DIST. | DISTRIBUTION |
| DWG. | DRAWING |
| DP | DISTRIBUTION PANEL |
| EXH. | EXHAUST |
| (E),EXIST. | EXISTING |
| ELECT. | ELECTRICAL |
| EL.,ELEV. | ELEVATION |
| EMERG. | EMERGENCY |
| EQUIP. | EQUIPMENT |
| ETM | ELAPSED TIME METER |
| FLEX. | FLEXIBLE |
| FLUOR. | FLUORESCENT |
| FS | FLOW SWITCH |
| FMC | FORWARD MAGNETIC CONTACTOR |
| G | GREEN |
| GALV. | GALVANIZED |
| HLS | HIGH LEVEL SENSOR |
| HOA | HAND-OFF-AUTOMATIC |
| HMC | HIGH SPEED MAGNETIC CONTACTOR |
| INC. | INCANDESCENT |
| INST. | INSTANTANEOUS |
| J | JUNCTION BOX |
| KV | KILOVOLTS |
| KVA | KILOVOLT AMPERES |
| KW | KILOWATTS |
| L | LINE |
| L1X, L2X | CONTROL POWER SOURCE |
| LOL | LOW OIL LEVEL |
| LTG. | LIGHTING |
| LS | LEVEL SWITCH |
| LMC | LOW SPEED MAGNETIC CONTACTOR |
| M | MOTOR |
| MAX. | MAXIMUM |
| MCC | MOTOR CONTROL CENTER |
| MCM | THOUSAND CIRCULAR MILS |
| MCP | MOTOR CIRCUIT PROTECTOR |
| MECH. | MECHANICAL |
| MS | MOTOR STARTER |
| MC | MAGNETIC CONTACTOR |
| N | NEUTRAL |
| NA | NON-AUTOMATIC |
| N.C. | NORMALLY CLOSED |
| NEMA | NATIONAL ELECTRICAL MANUFACTURERS ASSOC. |
| NO. | NUMBER |
| N.O. | NORMALLY OPEN |
| OL | THERMAL OVERLOAD RELAY |
| P | POLE |
| PG&E | PACIFIC GAS & ELECTRIC CO. |
| PNL. | PANEL |
| PRI. | PRIMARY |
| PS | PRESSURE SWITCH |
| PSI | POUNDS PER SQUARE INCH |
| PT | POTENTIAL TRANSFORMER |
| PVC | POLYVINYL CHLORIDE |
| R | RED |
| RD | ROAD |
| RCT | REPEAT CYCLE TIMER |
| RECEPT. | RECEPTACLE |
| RM. | ROOM |
| RMC | REVERSE MAGNETIC CONTACTOR |
| SEC. | SECONDS |
| SPEC. | SPECIFICATIONS |
| SULF. | SULFONATOR |
| SV | SOLENOID VALVE |
| TEL. | TELEPHONE |
| TEMP. | TEMPERATURE |
| TERM. | TERMINAL |
| TH | THERMOSTAT |
| TR | TIMING RELAY |
| TRANSF. | TRANSFORMER |
| TYP. | TYPICAL |
| TS | TORQUE SWITCH |
| V | VOLTS |
| V-A | VOLT-AMPERES |
| W | WIRE OR WIDTH |
| W/ | WITH |
| WH | WATT HOUR METER |

## PLANS (SEE NOTE 9)

- INDICATES EQUIPMENT REMOVAL
- EXPOSED CONDUIT, SEE NOTE 6
- CONCEALED CONDUIT, SEE NOTE 6
- 1/2" C - 3#12 — CALLOUT, INDICATING CONDUIT SIZE, NO. OF WIRES & WIRE SIZE
- 110 — CALLOUT, INDICATING CONDUIT PER SCHEDULE
- LIGHTING CONDUIT RUN. HATCH MARKS INDICATE NO. OF #12 CONDUCTORS NO HATCH MARKS IS 2 #12
- HOMERUN TO PANELBOARD OR AS INDICATED
- FLEXIBLE CONDUIT
- M — DEVICE PER LETTER ABBREVIATIONS
- SAFETY SWITCH
- A a — FLUORESCENT LIGHT FIXTURE, SEE NOTE 1
- B b — WALL MOUNTED FIXTURE, SEE NOTE 1
- $a — SINGLE POLE SWITCH, SEE NOTE 2
- $b 3 — THREE-WAY SWITCH, SEE NOTE 2
- $MS — MANUAL MOTOR STARTER
- DUPLEX RECEPTACLE MOUNT AT ± 4'-0" OR AS NOTED
- DUPLEX RECEPTACLE **MOUNT AT ± 1'-0" OR AS NOTED**
- DUPLEX RECEPTACLE, MOUNTED ON BACK SPLASH
- GROUND ROD & GROUND ROD BOX
- CONTROL STATION
- UNIT HEATER
- POLE RISER
- WALL TELEPHONE OUTLET, MOUNT AT 1'-0" OR AS NOTED
- INSTRUMENTATION DEVICE
- S 2 — SECURITY ALARM SENSOR ZONE 2

## ELEMENTARY DIAGRAMS (SEE NOTE 7)

- ENCLOSURE AS INDICATED
- **REMOTE CONTROL WIRING**
- SINGLE POLE CIRCUIT BREAKER
- 3-POLE CIRCUIT BREAKER
- FUSE, AMPERE RATING AS NOTED
- AR — CONTROL DEVICE COIL, PREFIX NO. WHEN USED DISTINGUISHES BETWEEN DEVICES OF THE SAME TYPE DEVICE (TYPE PER ABBREVIATIONS)
- R — PUSH-TO-TEST INDICATING LIGHT, COLOR PER ABBREVIATION
- NORMALLY OPEN PUSHBUTTON, SEE NOTE 3
- NORMALLY CLOSED PUSHBUTTON, SEE NOTE 3
- 2-POSITION SELECTOR SWITCH
- 3-POSITION SELECTOR SWITCH
- MANUAL STARTER, SINGLE POLE UNLESS OTHERWISE NOTED.
- TERMINALS — DISCONNECTING TYPE TERMINALS
- GROUND CONNECTION
- CONTACT NORMALLY OPEN, SEE NOTES 3, 4 & 5
- CONTACT NORMALLY CLOSED, SEE NOTES 3, 4 & 5
- SINGLE POLE SWITCH

## SINGLE LINE DIAGRAM

- SWITCH, 3P EXCEPT WHERE NOTED. RATING AS NOTED
- 400AF 300AT — CIRCUIT BREAKER, 3P EXCEPT WHERE NOTED. RATING IN AMPS AS NOTED. AF-AMP FRAME; AT-AMP TRIP
- 7/40 — 3P MOTOR CIRCUIT PROTECTOR UPPER NO. INDICATES FRAME SIZE IN AMPS LOWER NO. INDICATES TRIP
- FUSE, RATING AS NOTED
- TRANSFORMER, RATING AS NOTED
- CURRENT TRANSFORMER
- PANELBOARD
- 5 — MOTOR, NO. INDICATES HORSEPOWER
- DOUBLE THROW SWITCH, AUTO OR MANUAL AS INDICATED
- FULL VOLTAGE, NON-REVERSING MAGNETIC STARTER, SIZE AS NOTED
- SERVICE TERMINATION
- 10 — ELEMENTARY DIAGRAM REFERENCE NO.
- CONTROLS PROVIDED W/EQUIPMENT AND NOT A PART OF THE ELECTRICAL WORK
- DEVICE PER ABBREVIATION
- HEATER, RATING AS INDICATED
- INDICATES EQUIPMENT REMOVAL

## OTHER

| | |
|---|---|
| @ | AT |
| Y | WYE |
| ▽ | DELTA CONNECTED |
| & | AND |
| ø | PHASE |
| ℄ | TO CIRCUIT |
| " | INCHES |
| ' | FEET |

## SENSING SWITCHES (SEE NOTES 3 & 5)

| SYMBOL | TYPE | CLOSED ON |
|---|---|---|
| | LEVEL | RISING LEVEL |
| | LEVEL | FALLING LEVEL |
| | PRESSURE | RISING PRESSURE |
| | PRESSURE | FALLING PRESSURE |
| | LIMIT | ACTUATION |

## TIMED CONTACTS (SEE NOTES 3 & 5)

| SYMBOL | NORMAL | OPEN TO CLOSE | CLOSE TO OPEN |
|---|---|---|---|
| | OPEN | DELAY | INST. |
| | CLOSED | INST. | DELAY |

## LEGEND NOTES

1. LOWER CASE LETTER ADJACENT TO A FIXTURE INDICATES SWITCH CIRCUIT. INSIDE UPPER CASE LETTER INDICATES FIXTURE TYPE AS DESCRIBED IN THE SPECIFICATION AND FIXTURE SCHEDULE.
2. LOWER CASE LETTER ADJACENT TO SWITCH INDICATES SWITCH CIRCUIT.
3. "NORMAL" STATUS OF CONTACTS OR VALVES IS THE SHELF POSITION.
4. NUMBER AND/OR LETTERS IDENTIFY CONTACTS & OPERATING COIL.
5. NUMBER AND/OR LETTERS IDENTIFY DEVICE.
6. CONDUIT SIZE & FILL SHALL BE AS INDICATED. WHERE NO SIZE IS SHOWN, THE CONDUIT SHALL BE SIZED IN ACCORDANCE WITH THE RECENT EDITION OF THE NATIONAL ELECTRICAL CODE.
7. UNDERLINED WORDS SHOWN AT PUSHBUTTONS, LIGHTS, SELECTOR SWITCHES, ETC., INDICATE THE LEGEND PLATE REQUIREMENT FOR THAT PARTICULAR DEVICE. ANY ADDITIONAL NAMEPLATES ARE INDICATED ON ELEVATIONS WITH THE REQUIRED NAMEPLATE INSCRIPTIONS.
8. ADJACENT UPPER CASE LETTER & NUMBER IDENTIFY PANELBOARD & CIRCUIT NUMBER.
9. EXCEPT AS NOTED, EQUIP. MOUNTING HEIGHTS ABOVE FLOOR SHALL BE AS FOLLOWS:

PANELBOARD----------6'-6" (TOP OF ENCLOSURE)
SWITCHES----------4'-0"
RECEPTACLES----------3'-0" PER SPECS.
CONTROL STATIONS----------4'-2"
LIGHTING TRANSF.----------8'-0" (TOP OF)

Record Drawing
These record drawings have been prepared, in part, on the basis of information compiled and furnished by others. Kennedy/Jenks/Chilton is not responsible for any errors or omissions in this document as a result of information provided by others.
Date: APR. 29, 1988.

| Revised | Description | Submit. | Appr'd. | Date |
|---|---|---|---|---|
| Refer to Tracing for Latest Revision | | | | |

Reference Information and Notes:

Designed: JWS/RDS
Drawn: CAB
Checked: JWS
Date: 1/29/81

Wastewater Plant Improvements C-06-2464
Sausalito - Marin City Sanitary District
Kennedy/Jenks Engineers San Francisco
Submitted: Walter E. Gamma
Approved: Robert J. Dean

ABBREVIATIONS, LEGEND AND NOTES

Scale: NO SCALE
Job No. 0112
Sheet E-1 of

84

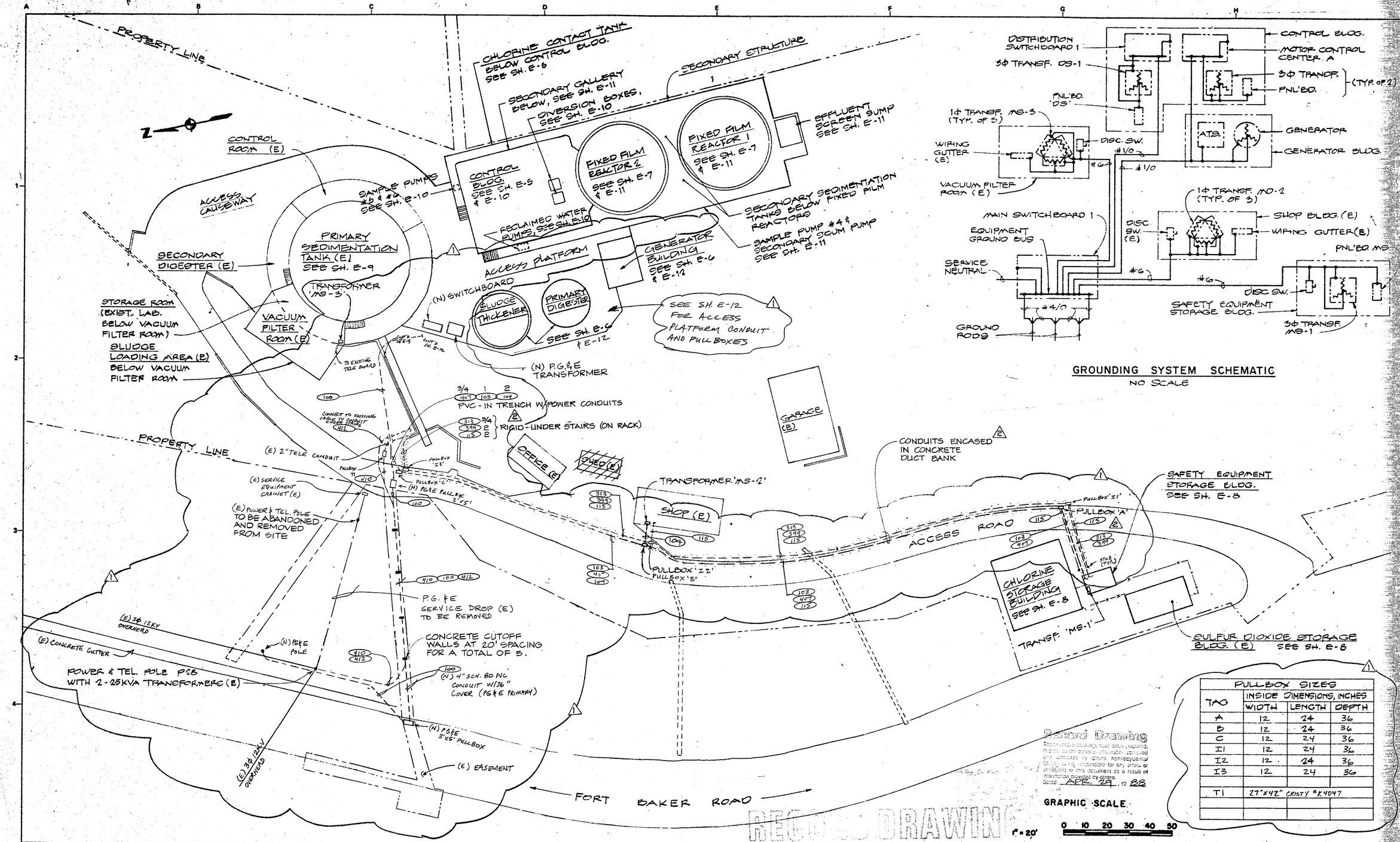


| PULLBOX SIZES | | | |
|---|---|---|---|
| TAG | INSIDE DIMENSIONS, INCHES | | |
| | WIDTH | LENGTH | DEPTH |
| A | 12 | 24 | 36 |
| B | 12 | 24 | 36 |
| C | 12 | 24 | 36 |
| I1 | 12 | 24 | 36 |
| I2 | 12 | 24 | 36 |
| I3 | 12 | 24 | 36 |
| | | | |
| T1 | 27"x42" CRISTY #K4047 | | |
| | | | |
| | | | |

| Revised | Description | Submit. | Appr'd. | Date |
|---|---|---|---|---|
| 2 | ADDENDUM NO. 2 CO NO. 59 & 8 | | | |

Refer to Tracing for Latest Revision

Reference Information and Notes:
1. SEE SHT. E-8 AND E-9 FOR CONDUIT SCHEDULES.

Record Drawing
These record drawings have been prepared, in part, on the basis of information compiled and furnished by others. Kennedy/Jenks Consultants is not responsible for any errors or omissions in this document as a result of information provided by others.
Dated APR. 29, 1988

Designed RDB
Drawn CB, WL
Checked JWS
Date 1/29/81

Wastewater Plant Improvements C-06-2464
Sausalito - Marin City Sanitary District

Kennedy/Jenks Engineers San Francisco

Submitted: Walter E. Hausman 6/29/81
Approved: R. Bruce Owen

ELECTRICAL SITE PLAN

Scale 1" = 20'
Job No. 0112
Sheet E-2 of

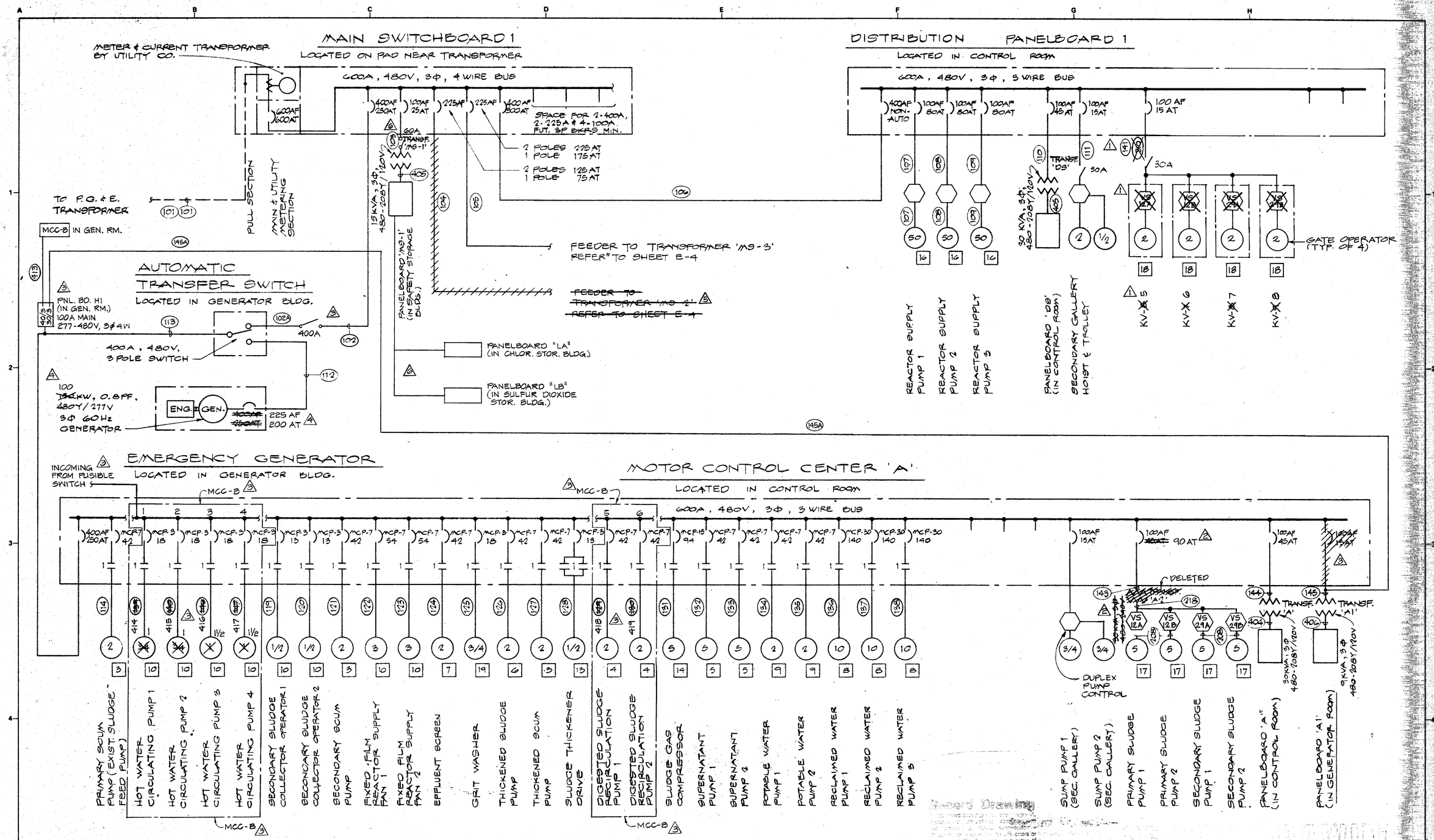


| Revised | Description | Submit. | Appr'd. | Date |
|---|---|---|---|---|
| | CO NO. 7 | | | |
| | CO NO. 15 | | | |
| | ADDENDUM NO. 2 | | | |
| | CO NO. 12 | | | |
| | CO NO. 23 | | | |
| | CLARIFICATION | | | |

Refer to Tracing for Latest Revision

Reference Information and Notes:

Record Drawing

These record drawings have been prepared, in part, on the basis of information compiled and furnished by Kennedy/Jenks/Chilton. Kennedy/Jenks/Chilton is not responsible for any errors or omissions in this document as a result of information provided by others.
Date APR. 29, 1988

Designed RDB
Drawn WL
Checked JWS
Date 1/29/81

**Wastewater Plant Improvements C-06-2464**
**Sausalito - Marin City Sanitary District**

Kennedy/Jenks Engineers — San Francisco

Submitted: C9370 — Approved:

SINGLE LINE DIAGRAM I

Scale NONE
Job No. 0112
Sheet E-3 of

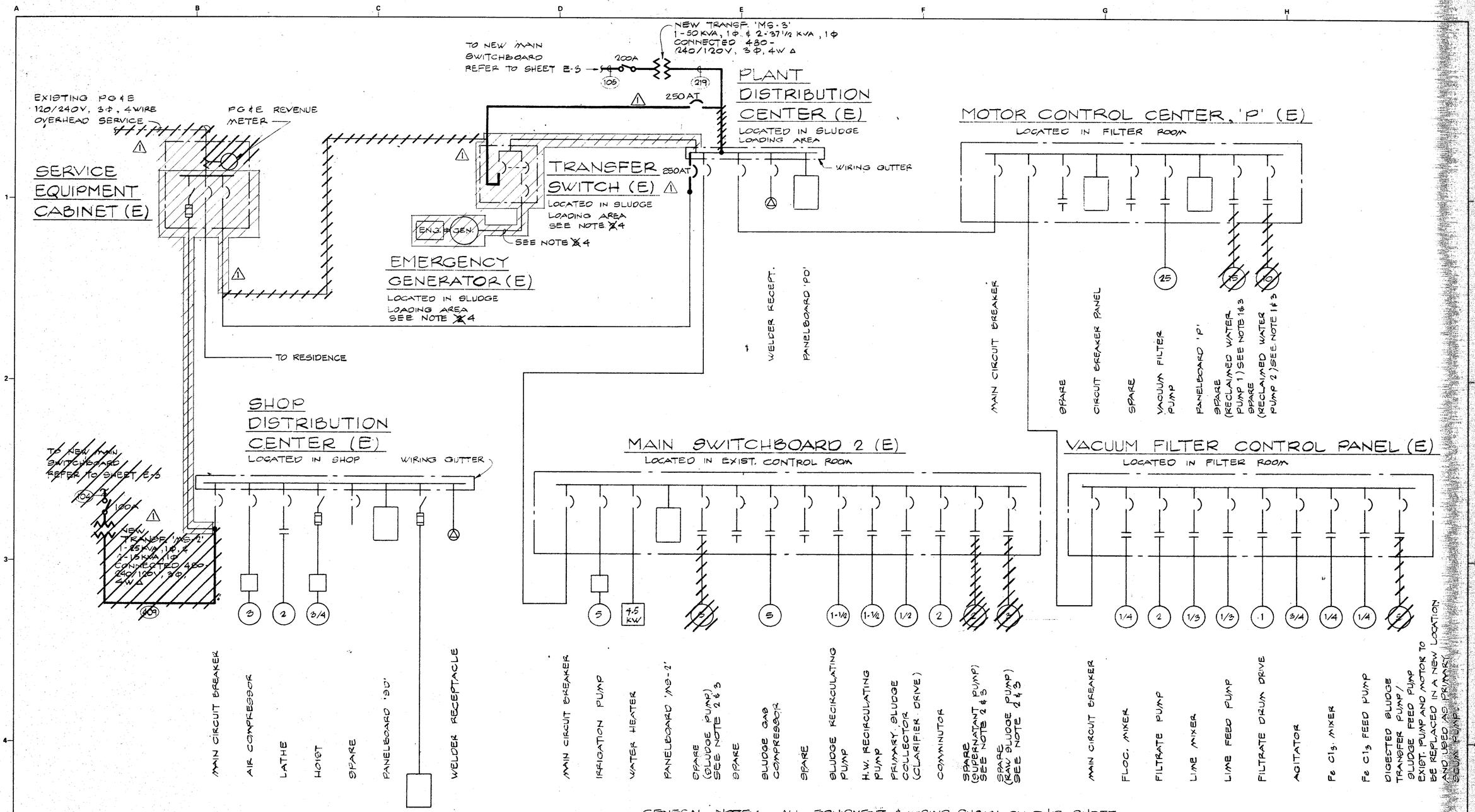


GENERAL NOTE: ALL EQUIPMENT & WIRING SHOWN ON THIS SHEET IS EXISTING, EXCEPT NEW WORK WHICH IS SHOWN WITH HEAVY LINES.

**Record Drawing**

These record drawings have been prepared, in part, on the basis of information compiled and furnished by others. Kennedy/Jenks/Chilton is not responsible for any errors or omissions in this document as a result of information provided by others.
Dated APR 29 19 88

| Revised | Description | Submit. | Appr'd. | Date |
|---|---|---|---|---|
| 1 | CO NO. 15 | | | |

Refer to Tracing for Latest Revision

**Reference Information and Notes:**

1. TO BE DISCONNECTED AND ABANDONED IN PLACE.
2. TO BE REMOVED AND DELIVERED TO OWNER.
3. ABANDON CONDUIT AND CONDUCTORS IN PLACE.
4. TO BE LEFT IN PLACE AND REUSED

Designed: RDB
Drawn: W/L
Checked: JWS
Date: 1/29/81

**Wastewater Plant Improvements** C-06-2464
**Sausalito - Marin City Sanitary District**

**Kennedy/Jenks Engineers** **San Francisco**

Submitted: Walter S. Fonseca
Approved: Robert J. Lunn

SINGLE LINE DIAGRAM 2

Scale: NONE
Job No.: 0112
Sheet E-4 of

87

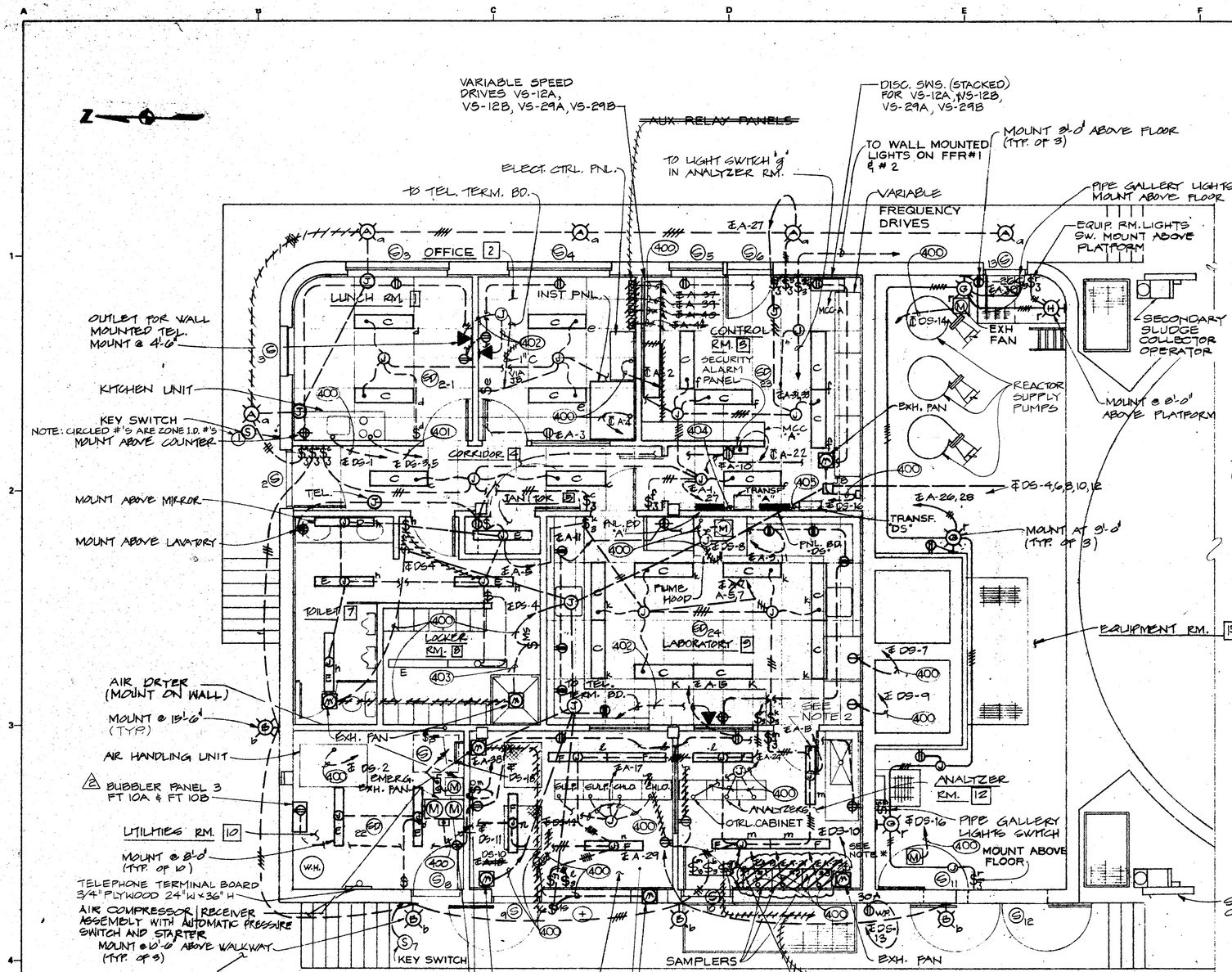


## CONTROL BUILDING
## PLAN @ EL. 115.0 & 104.0
SCALE: 1/4" = 1'-0"

* NOTE: CHANGED TO 2 DUP. REC. #A-19, 23 (#A-21 USED FOR FLOWMETER FE/FIT 30)

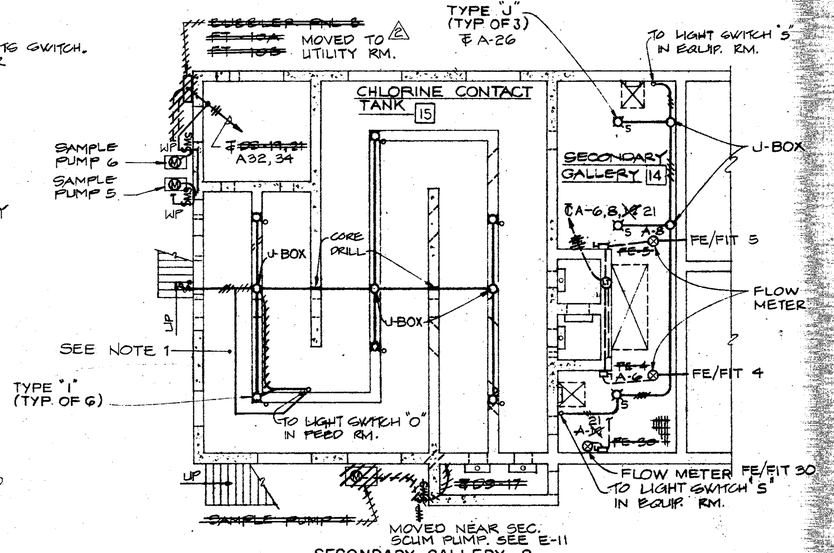


## SECONDARY GALLERY & CHLORINE CONTACT TANK
## PLAN @ EL. 89.0 & 101.0
SCALE: 1/8" = 1'-0"

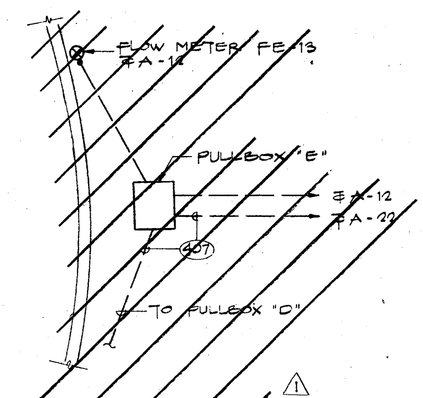


## EXISTING PRIMARY STRUCTURE
SCALE: 1/4" = 1'-0"

**Record Drawing**
These record drawings have been prepared, in part, on the basis of information compiled and furnished by others. Kennedy/Jenks/Chilton is not responsible for any errors or omissions in this document as a result of information provided by others.
Date: APR 24 19 88

GRAPHIC SCALE
1/4" = 1'-0" 0 4 8 12
1/8" = 1'-0" 0 5 10 15 20 25

| Revised | Description | Submit. | Appr'd. | Date |
|---|---|---|---|---|
| 3 | FIELD CHANGE | | | |
| 2 | CO NO. 53 | | | |
| 1 | CO NO. 16 | | | |

Refer to Tracing for Latest Revision

**Reference Information and Notes:**
1. RM. 15 CORROSIVE ATMOSPHERE. PROVIDE CONDUIT SEAL FOR EVERY CONDUIT THAT LEAVES THE BLDG.
2. MOUNT TYPE "F" LT. FIXTURE 9'-0" ABOVE FLOOR.
3. NUMEROUS FIELD CHANGES WITHIN CONTROL BUILDING NOT DESIGNATED BY 3.

Designed AA
Drawn WL/LCS
Checked JWS
Date 1/29/81

**Wastewater Plant Improvements** C-06-2464
**Sausalito - Marin City Sanitary District**

Kennedy/Jenks Engineers — San Francisco
Submitted: Walter E. Hausman 09370
Approved: R. Bert J. Weiss

# LIGHTING PLANS I

Scale: AS NOTED
Job No. 0112
Sheet E-5 of

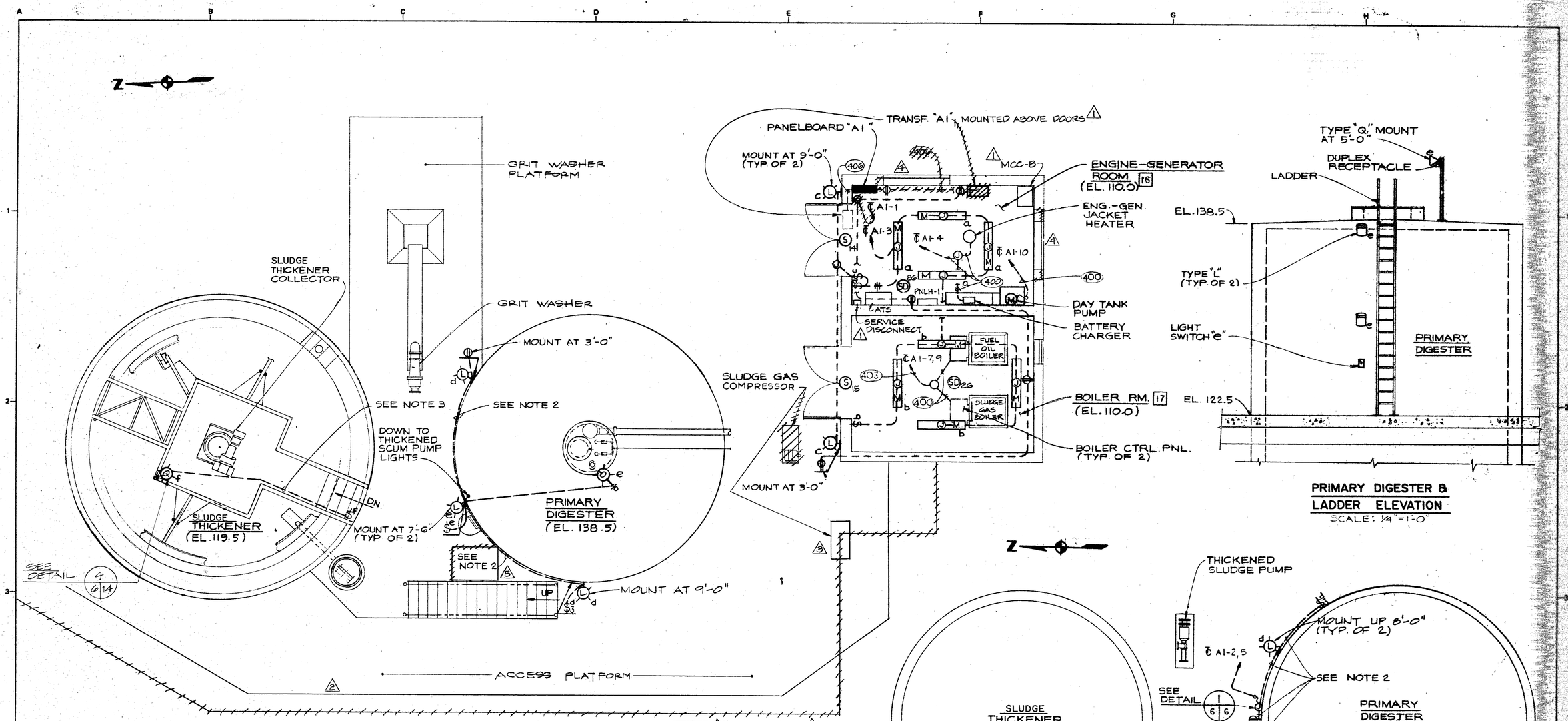


SLUDGE THICKENER, PRIMARY DIGESTER & ENGINE GENERATOR BLDG. PLAN
SCALE: 1/4" = 1'-0"

PRIMARY DIGESTER & LADDER ELEVATION
SCALE: 1/4" = 1'-0"

J-BOX INSTALLATION DETAIL 1 6 6
NO SCALE

SLUDGE THICKENER, PRIMARY DIGESTER PLAN @ EL. 110.0
SCALE: 1/4" = 1'-0"

GRAPHIC SCALE 1/4" = 1'-0" 0 4 8 12

**Record Drawing**

These record drawings have been prepared, in part, on the basis of information compiled and furnished by others. Kennedy/Jenks/Chilton is not responsible for any errors or omissions in this document as a result of information provided by others.
Dated APR. 29, 19 88

RECORD DRAWING

| Revised | Description | Submit. | Appr'd. | Date |
|---|---|---|---|---|
| 5 | FIELD CHANGE | | | |
| 4 | CO NO. 50 | | | |
| 3 | CO NO. 35 | | | |
| 2 | CO NO. 23 | | | |
| 1 | CO NO. 12 | | | |

Refer to Tracing for Latest Revision

**Reference Information and Notes:**
1. RUN & SUPPORT CONDUIT ON UNDERSIDE OF DEGRITTER PLATFORM.
2. CONCEAL CONDUIT IN PRIMARY DIGESTER WALL.
3. RUN & SUPPORT CONDUIT ON UNDERSIDE OF WALKWAY.

Designed A.A.
Drawn CB/LCS
Checked JWS
Date 1/29/81

Wastewater Plant Improvements C-06-2464
Sausalito - Marin City Sanitary District
Kennedy Jenks Engineers San Francisco
Submitted: Walter E. Hansman C9370
Approved: Robert J. Quinn

LIGHTING PLANS 2

Scale AS NOTED
Job No. 0112
Sheet E-6 of

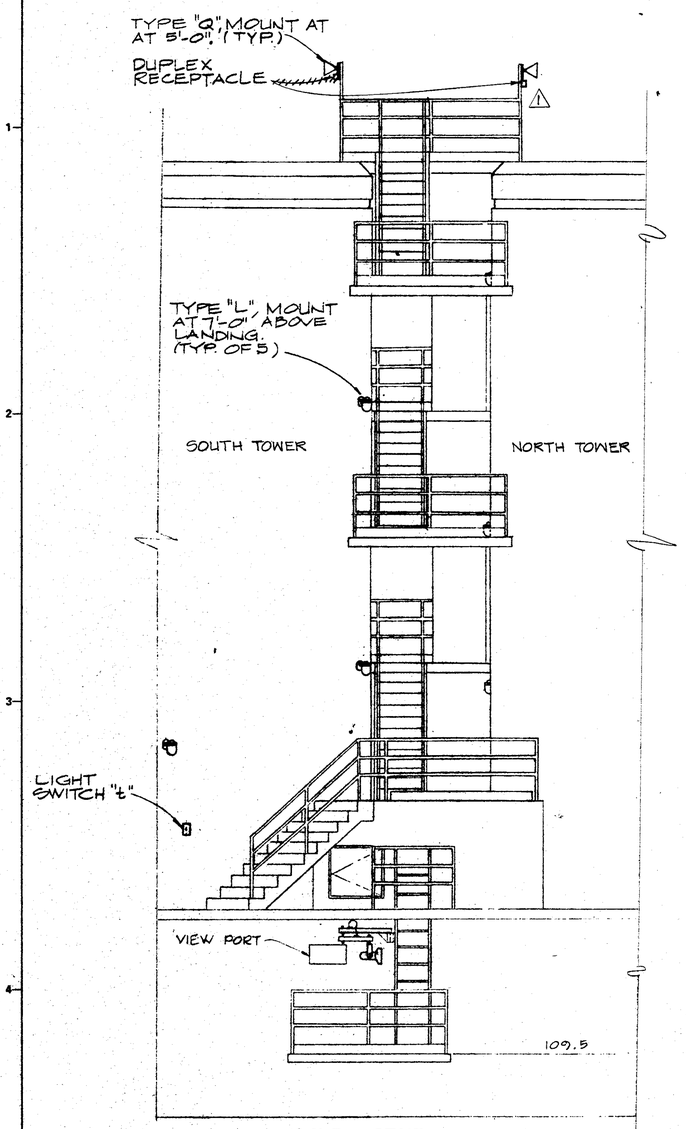


F. F. R. STAIR
EAST ELEVATION
SCALE: 1/4" = 1'-0"

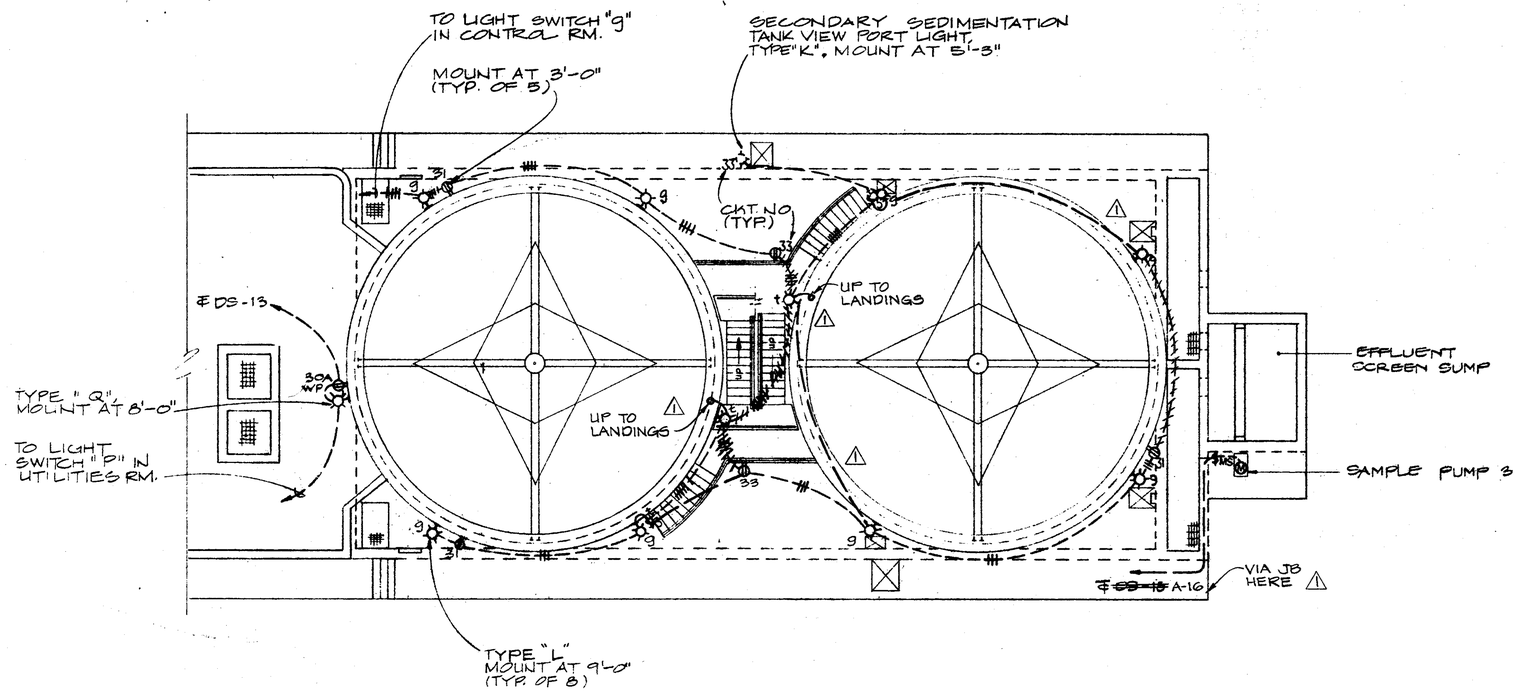


FIXED FILM REACTORS PLAN
SCALE: 1/8" = 1'-0"

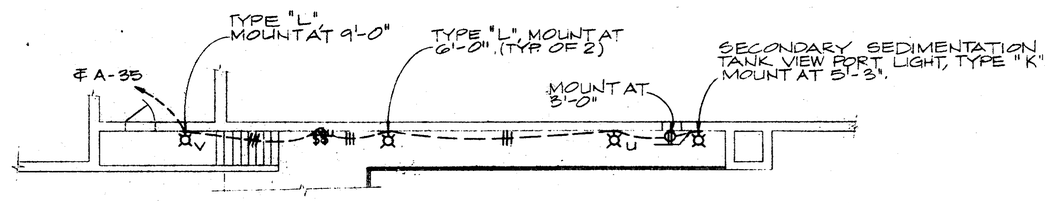


WEST SIDE WALKWAY
PLAN @ EL. 109.5
SCALE: 1/8" = 1'-0"

GRAPHIC SCALE
1/4" = 1'-0" 0 4 8 12
1/8" = 1'-0" 0 5 10 15 20 25

RECORD DRAWING

| Revised | Description | Submit. | Appr'd. | Date |
|---|---|---|---|---|
| 1 | FIELD CHANGE | | | |

Refer to Tracing for Latest Revision

Reference Information and Notes:

Record Drawing
These record drawings have been prepared, in part, on the basis of information compiled and furnished by others. Kennedy/Jenks/Chilton is not responsible for any errors or omissions in this document as a result of information provided by others.
Dated APR. 29, 1988

Designed AA
Drawn WL/LCS
Checked JWS
Date 1/29/81

Wastewater Plant Improvements C-06-2484
Sausalito - Marin City Sanitary District
Kennedy/Jenks Engineers San Francisco
Submitted: Walter F. Garsina C9370
Approved: Robert J. Kenney

LIGHTING PLANS 3

Scale AS NOTED
Job No. 0112
Sheet E-7 of

90

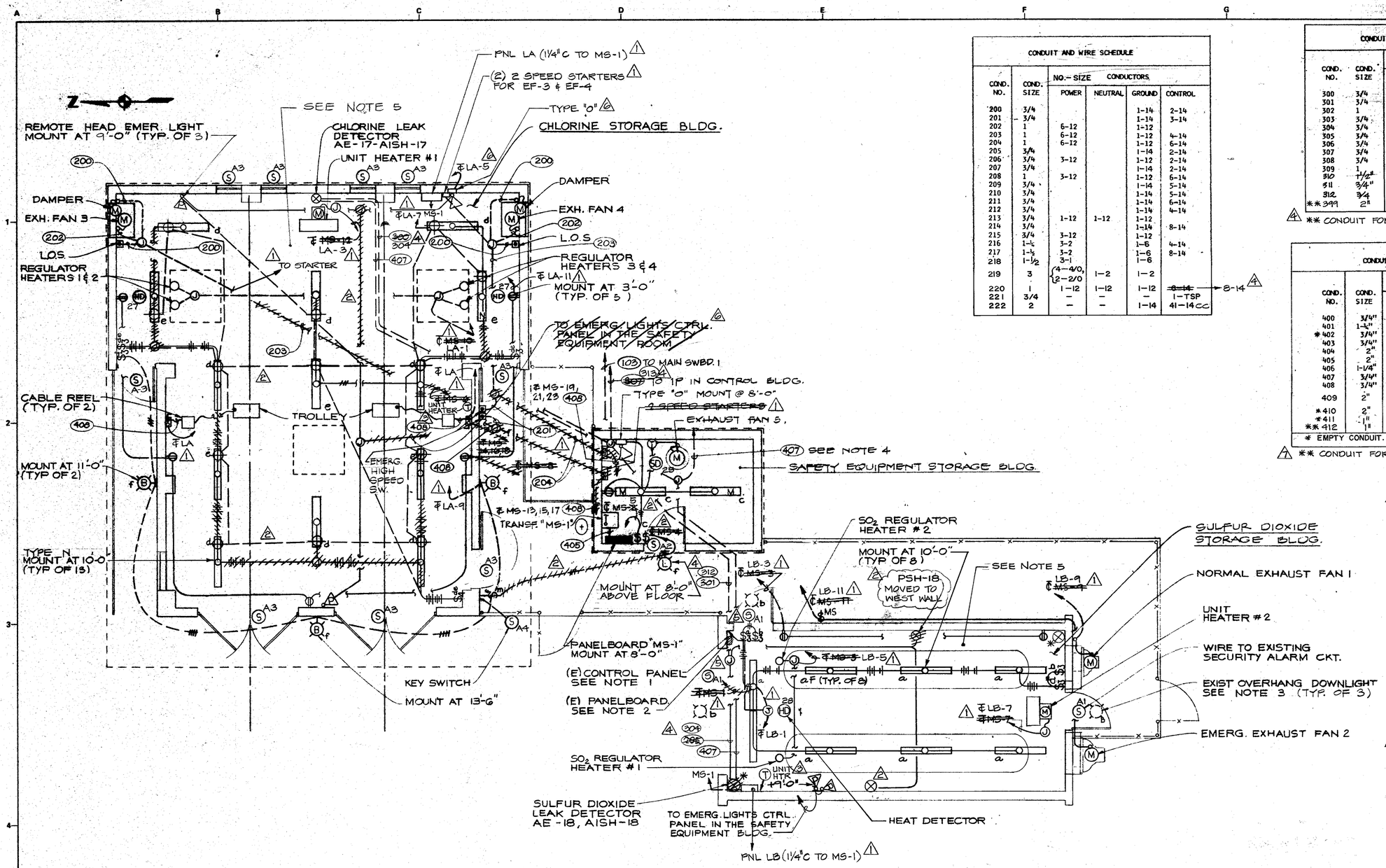


## CHLORINE & SULFUR STORAGE & SAFETY EQUIPMENT BLDGS. PLAN

SCALE: 1/4" = 1'-0"

* - MOVED TO SE CORNER

| CONDUIT AND WIRE SCHEDULE | | | | | |
|---|---|---|---|---|---|
| COND. NO. | COND. SIZE | NO.-SIZE CONDUCTORS POWER | NEUTRAL | GROUND | CONTROL |
| 200 | 3/4 | | | 1-14 | 2-14 |
| 201 | 3/4 | | | 1-14 | 3-14 |
| 202 | 1 | 6-12 | | 1-12 | |
| 203 | 1 | 6-12 | | 1-12 | 4-14 |
| 204 | 1 | 6-12 | | 1-12 | 6-14 |
| 205 | 3/4 | | | 1-14 | 2-14 |
| 206 | 3/4 | 3-12 | | 1-12 | 2-14 |
| 207 | 3/4 | | | 1-14 | 2-14 |
| 208 | 1 | 3-12 | | 1-12 | 6-14 |
| 209 | 3/4 | | | 1-14 | 5-14 |
| 210 | 3/4 | | | 1-14 | 5-14 |
| 211 | 3/4 | | | 1-14 | 6-14 |
| 212 | 3/4 | | | 1-14 | 4-14 |
| 213 | 3/4 | 1-12 | 1-12 | 1-12 | |
| 214 | 3/4 | | | 1-14 | 8-14 |
| 215 | 3/4 | 3-12 | | 1-12 | |
| 216 | 1-½ | 3-2 | | 1-6 | 4-14 |
| 217 | 1-½ | 3-2 | | 1-6 | 8-14 |
| 218 | 1-½ | 3-1 | | 1-6 | |
| 219 | 3 | {4-4/0, 2-2/0 | 1-2 | 1-2 | |
| 220 | 1 | 1-12 | 1-12 | 1-12 | ~~8-14~~ → 8-14 △4 |
| 221 | 3/4 | — | — | — | 1-TSP |
| 222 | 2 | — | — | 1-14 | 41-14CC |

| CONDUIT AND WIRE SCHEDULE | | | | | |
|---|---|---|---|---|---|
| COND. NO. | COND. SIZE | NO.-SIZE CONDUCTORS POWER | NEUTRAL | GROUND | CONTROL |
| 300 | 3/4 | | | 1-14 | 2-14 |
| 301 | 3/4 | | | 1-14 | 4-14 |
| 302 | 1 | | | 1-14 | 8-14 |
| 303 | 3/4 | | | 1-14 | 4-14 |
| 304 | 3/4 | | | | 1-TSP |
| 305 | 3/4 | | | 1-14 | 2-14 |
| 306 | 3/4 | | | 1-14 | 5-14 |
| 307 | 3/4 | | | 1-14 | 6-14 |
| 308 | 3/4 | | | 1-14 | 7-14 |
| 309 | 1 | | | 1-14 | 6-14 |
| 310 | 1 1/2" | | | ~~1-14~~ | ~~25-14~~ |
| 311 | 3/4" | | | 1-14 | 7-14 |
| 312 | 3/4 | | | | 2-TSP |
| ** 399 | 2" | — | — | — | — |

△4 ** CONDUIT FOR FIRE/SECURITY WIRING

| CONDUIT AND WIRE SCHEDULE | | | | | |
|---|---|---|---|---|---|
| COND. NO. | COND. SIZE | NO.-SIZE CONDUCTORS POWER | NEUTRAL | GROUND | CONTROL |
| 400 | 3/4" | 1-12 | 1-12 | 1-12 | - |
| 401 | 1-4" | 2-4 | 1-4 | 1-8 | - |
| * 402 | 3/4" | - | - | - | - |
| 403 | 3/4" | 2-12 | 1-12 | 1-12 | - |
| 404 | 2" | 3-1 | 1-1 | 1-6 | - |
| 405 | 2" | 3-1 | 1-1 | 1-6 | - |
| 406 | 1-1/4" | 3-4 | 1-4 | 1-8 | - |
| 407 | 3/4" | 1-12 | 1-12 | 1-12 | - |
| 408 | 3/4" | 3-12 | - | 1-12 | - |
| 409 | 2" | {2-3/0, 1-1/0 | 1-6 | 1-2 | |
| * 410 | 2" | — | — | — | — |
| * 411 | 1" | — | — | — | — |
| ** 412 | 1" | — | — | — | — |

* EMPTY CONDUIT. WIRES TO BE PROVIDED BY PT &T CO.

△7 ** CONDUIT FOR CABLE TV SERVICE

△4 CONDUIT AND WIRE SCHEDULE

| COND. NO. | COND. SIZE | NO.-SIZE WIRES POWER | NEUTRAL | GROUND | CONTROL |
|---|---|---|---|---|---|
| 250 | 1½" | 7-12 | 1-12 | 3-12 | 14-14 |
| 251 | 2½" | 15-12 | — | 5-12, 3-14 | 45-14 |
| 252 | 3" | 24-12 | 3-12 | 10-12, 3-14 | 59-14 |
| 253 | 1½" | 6-12 | — | 2-12, 1-14 | 17-14 |
| 254 | 2" | 12-12 | — | 4-12, 1-14 | 33-14 |
| 255 | 2½" | 39-12 | 3-12 | 15-12 | — |
| 256 | 3" | — | — | 4-14 | 97-14 |
| 257 | 1" | 3-12 | 3-12 | 8-12 | — |
| 258 | 1" | 6-12 | — | 2-12 | 4-14 |
| 259 | 1½" | — | — | 2-14 | 29-14 |
| 260 | 2" | 15-12 | — | 5-12, 1-14 | 32-14 |
| 261 | 2" | 15-12 | — | 5-12, 1-14 | 32-14 |
| 262 | 1½" | — | — | — | — |
| 263 | 1½" | — | — | 1-14 | 24-14 |

△4 CONDUIT AND WIRE SCHEDULE

| COND. NO. | COND. SIZE | NO.-SIZE WIRES POWER | NEUTRAL | GROUND | CONTROL |
|---|---|---|---|---|---|
| 313 | 3/4" | — | — | — | 3-TSP |
| 314 | 1" | — | — | — | 4-TSP |
| 316 | 1" | — | — | — | 6-TSP |
| 319 | 1½" | — | — | — | 9-TSP |
| 321 | 2" | — | — | — | 14 ~~2K~~-TSP △7 |
| 322 | 2" | — | — | — | 18-TSP |
| 323 | 3/4" | — | — | — | — |
| 324 | 2" | — | — | — | 17-TSP |
| 325 | 1¼" | — | — | — | 10-TSP |
| 326 | 1½" | — | — | — | 12-TSP |

**Record Drawing**

These record drawings have been prepared, in part, on the basis of information compiled and furnished by others. Kennedy/Jenks/Chilton is not responsible for any errors or omissions in this document as a result of information provided by others.
Dated Apr. 24, 19 88

**Record Drawing**

These record drawings have been prepared, in part, on the basis of information compiled and furnished by others. Kennedy/Jenks/Chilton is not responsible for any errors or omissions in this document as a result of information provided by others.
Dated _____

RECORD DRAWING

GRAPHIC SCALE 1/4" = 1'-0" 0 4 8 12

| Revised | Description | Submit. | Appr'd. | Date |
|---|---|---|---|---|
| △7 | CO NO. 59 | | | |
| △6 | CO NO. 26 | | | |
| △5 | CO NO. 60 | | | |
| △4 | CO NO. 16 | | | |
| △3 | CLARIFICATION | | | |
| △2 | FIELD CHANGE | | | |
| △1 | CO NO. 7 | | | |

Refer to Tracing for Latest Revision

**Reference Information and Notes:**

1. TO BE ABANDONED IN PLACE.
2. TO BE REMOVED AND DELIVERED TO OWNER.
3. CONNECT TO LIGHT CKT. ℄ MS-1.
4. TO CONTROL BUILDING PANELBOARD "A", CONNECT TO ℄A-22
5. BLDG. IS CORROSIVE ATMOSPHERE. PROVIDE CONDUIT SEAL FOR EVERY CONDUIT THAT LEAVES THE BLDG.

Designed AA
Drawn WL/LS
Checked JWS
Date 1/29/81

**Wastewater Plant Improvements** C-06-2464
**Sausalito - Marin City Sanitary District**

Kennedy/Jenks Engineers — San Francisco
Submitted: Walter E. Thomas C9370
Approved: Robert J. Lewis

# LIGHTING & POWER PLAN

Scale 1/4" = 1'-0"
Job No. 0112
Sheet E-8 of

91

| CONDUIT AND WIRE SCHEDULE | | | | | |
|---|---|---|---|---|---|
| COND. NO. | COND. SIZE | NO-SIZE CONDUCTORS POWER | NEUTRAL | GROUND | CONTROL |
| * 100 | 4" | - | - | - | - |
| * 101 | 4" | - | - | - | - |
| 102 | 3" | 3-250 | - | 1-1/0 | - |
| 103 | 1 | 3-6 | - | 1-8 | - |
| 104 | 2 | 2-1, 1-4 | - | 1-6 | - |
| 105 | 3 | 2-4/0, 1-4/0 | | 1-6 | - |
| 106 | 3 | 3-350 | | 1-1/0 | - |
| 107 | 1-½ | 3-2 | | 1-8 | 8-14 |
| 108 | 1-½ | 3-2 | | 1-8 | 8-14 |
| 109 | 1-½ | 3-2 | | 1-8 | 8-14 |
| 110 | 1 | 3-6 | | 1-6 | |
| 111 | 3/4 | 3-12 | | 1-12 | |
| 112 | 3 | 3-250 | | 1-1/0 | |
| 113 | 3 | 3-250 | | 1-1/0 | |
| 114 | 1 | 3-12 | | 1-12 | 8-14 |
| 115 | 2 | — | — | — | — |
| 116 | 3 | — | — | — | — |
| 117 | | | | | |
| 118 | | | | | |
| 119 | 3/4 | 3-12 | | 1-12 | 2-14 |
| 120 | 3/4 | 3-12 | | 1-12 | 2-14 |
| 121 | 1 | 3-12 | | 1-12 | 5-14 |
| 122 | 3/4 | 3-12 | | 1-12 | 2-14 |
| 123 | 3/4 | 3-12 | | 1-12 | 2-14 |
| 124 | 1 | 3-12 | | 1-12 | 5-14 |
| 125 | 1 | 3-12 | | 1-12 | 4-14 |
| 126 | 1 | 3-12 | | 1-12 | 8-14 |
| 127 | 1 | 3-12 | | 1-12 | 6-14 |
| 128 | 1 | 3-12 | | 1-12 | 6-14 |
| 129 | 1 | 3-12 | | 1-12 | 6-14 |
| 130 | 1 | 3-12 | | 1-12 | 4-14 |
| 131 | 1 | 3-12 | | 1-12 | 5-14 |
| 132 | 1 | 3-12 | | 1-12 | 5-14 |
| 133 | 1 | 3-12 | | 1-12 | 5-14 |
| 134 | 3/4 | 3-12 | | 1-12 | 3-14 |
| 135 | 3/4 | 3-12 | | 1-12 | 3-14 |
| 136 | 3/4 | 3-12 | | 1-12 | 3-14 |
| 137 | 3/4 | 3-12 | | 1-12 | 3-14 |
| 138 | 3/4 | 3-12 | | 1-12 | 3-14 |
| 139 | 3/4 | 3-12 | | 1-12 | 2-14 |
| 140 | 3/4 | 3-12 | | 1-12 | 2-14 |
| 141 | 3/4 | 3-12 | | 1-12 | - |
| 142 | 3/4 | 3-12 | | 1-12 | - |
| 143 | 1 | 3-6 | | 1-6 | — |
| 144 | 1 | 3-6 | | 1-6 | — |
| 145 | 3/4 | 3-12 | | 1-12 | — |
| 146 | 3/4 | 3-12 | | 1-12 | 2-14 |
| 147 | 3/4 | 3-12 | | 1-12 | 2-14 |

* EMPTY CONDUIT WIRES TO BE PROVIDED BY PG&E CO.

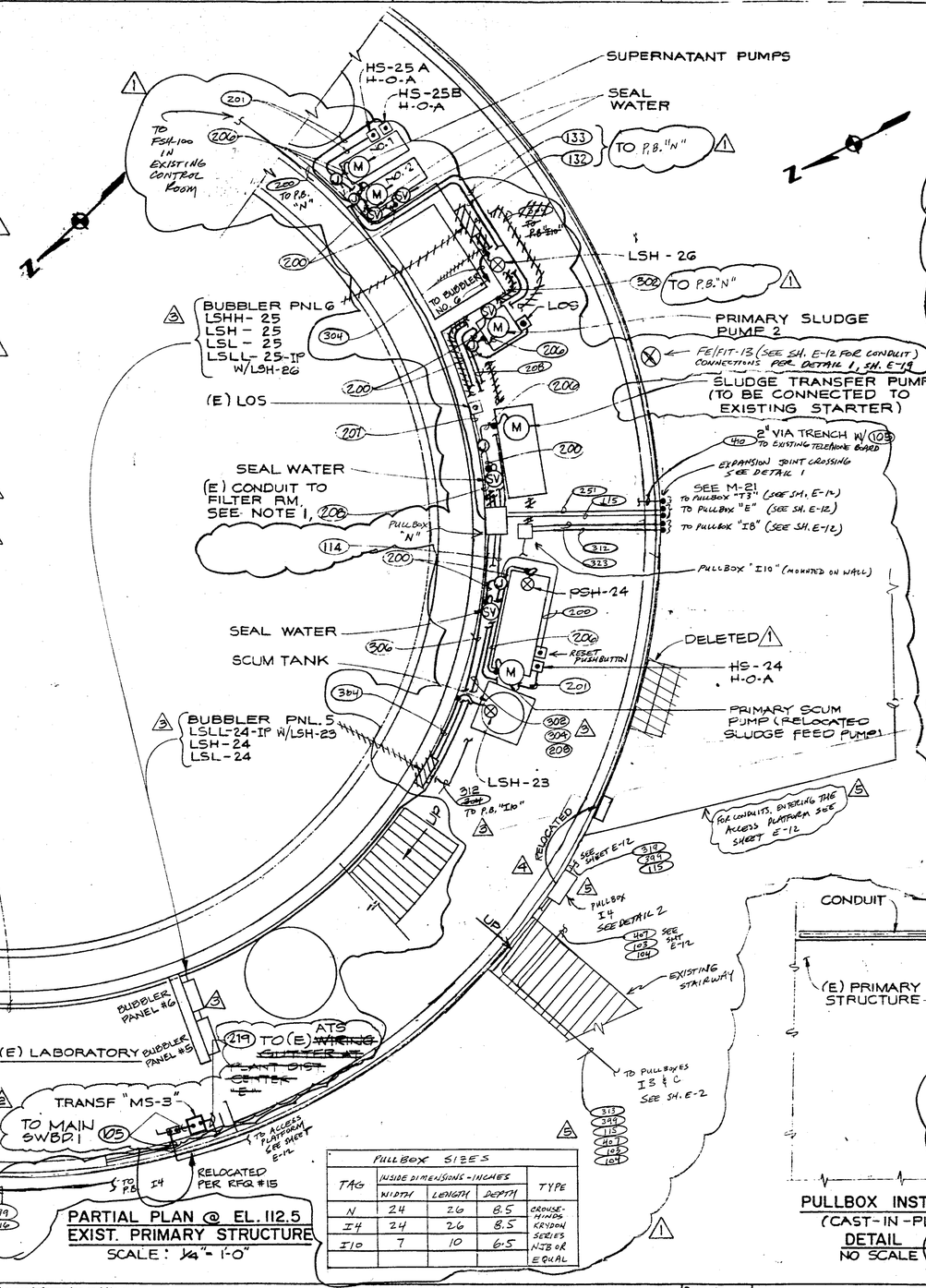


PARTIAL PLAN @ EL. 112.5
EXIST. PRIMARY STRUCTURE
SCALE: 1/4" = 1'-0"

| PULLBOX SIZES | | | | |
|---|---|---|---|---|
| TAG | INSIDE DIMENSIONS - INCHES WIDTH | LENGTH | DEPTH | TYPE |
| N | 24 | 26 | 8.5 | CROUSE-HINDS KRYDON SERIES NJB OR EQUAL |
| I4 | 24 | 26 | 8.5 | |
| I10 | 7 | 10 | 6.5 | |
| | | | | |

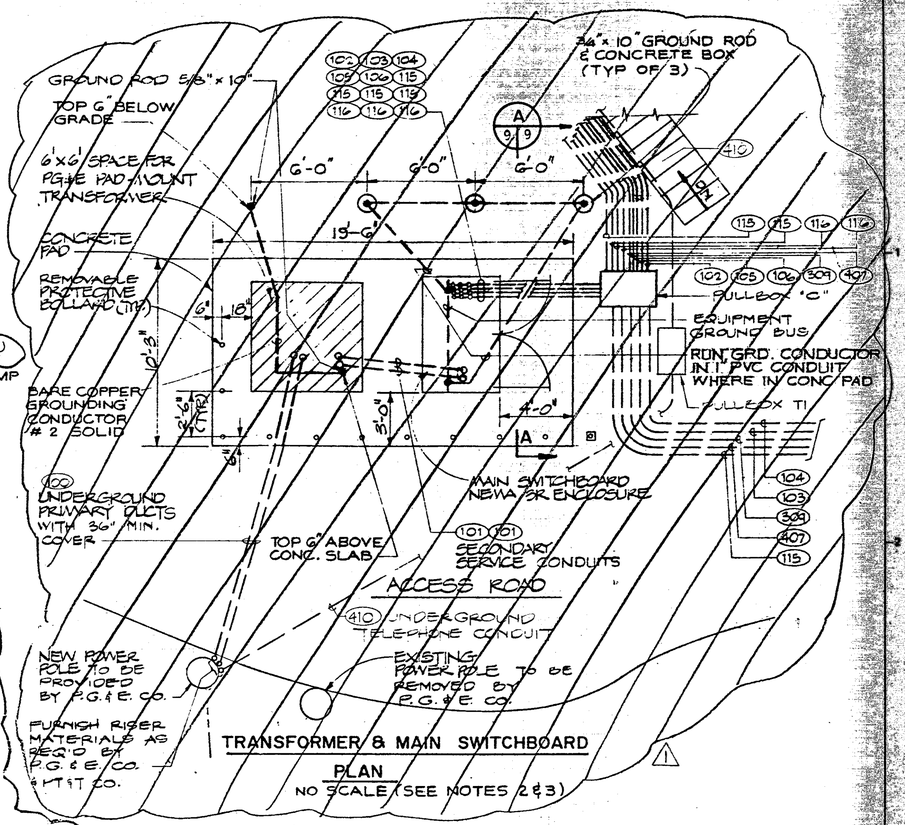


TRANSFORMER & MAIN SWITCHBOARD
PLAN
NO SCALE (SEE NOTES 2 & 3)

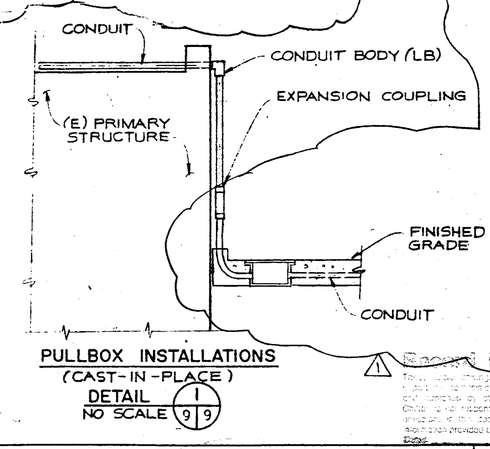


PULLBOX INSTALLATIONS
(CAST-IN-PLACE)
DETAIL 1
NO SCALE

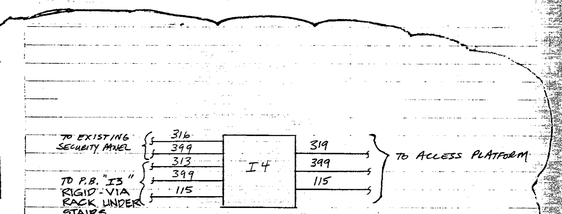


DETAIL 2

Record Drawing
These record drawings have been prepared, in part, on the basis of information compiled and furnished by others. Kennedy/Jenks/Chilton is not responsible for any errors or omissions in this document as a result of information provided by others.
Dated APRIL 29, 1988

REDUCED DRAWING

GRAPHIC SCALE
1/4" = 1'-0"  0  5  10

| Revised | Description | Submit. | Appr'd. | Date |
|---|---|---|---|---|
| 5 | CO NO. 59 | | | |
| 4 | FIELD CHANGE | | | |
| 3 | CO NO. 45 | | | |
| 2 | CO NO. 15 | | | |
| 1 | CO NO. 16 | | | |

Refer to Tracing for Latest Revision

Reference Information and Notes:
1. PROVIDE NEW WIRES IN THE EXISTING CONDUIT TO THE EXISTING STARTER IN THE VACUUM FILTER CONTROL PANEL.
2. THERE IS A ROCK NEAR GROUND SURFACE. DRILLING MAYBE NECESSARY TO INSTALL GROUND RODS.
3. FOR GROUND CONDUCTOR SIZES SEE GROUNDING SYSTEM SCHEMATIC SH. E-2.

Designed RDS/AA
Drawn AYS/LCS
Checked JWS
Date 1/29/81

Wastewater Plant Improvements C-06-2464
Sausalito-Marin City Sanitary District
Kennedy/Jenks Engineers San Francisco
Submitted: Walter Hirsemann C9370 Approved: Robert J. Green

POWER PLANS I

Scale 1/4" = 1'-0"
Job No. 0112
Sheet E-9 of

92

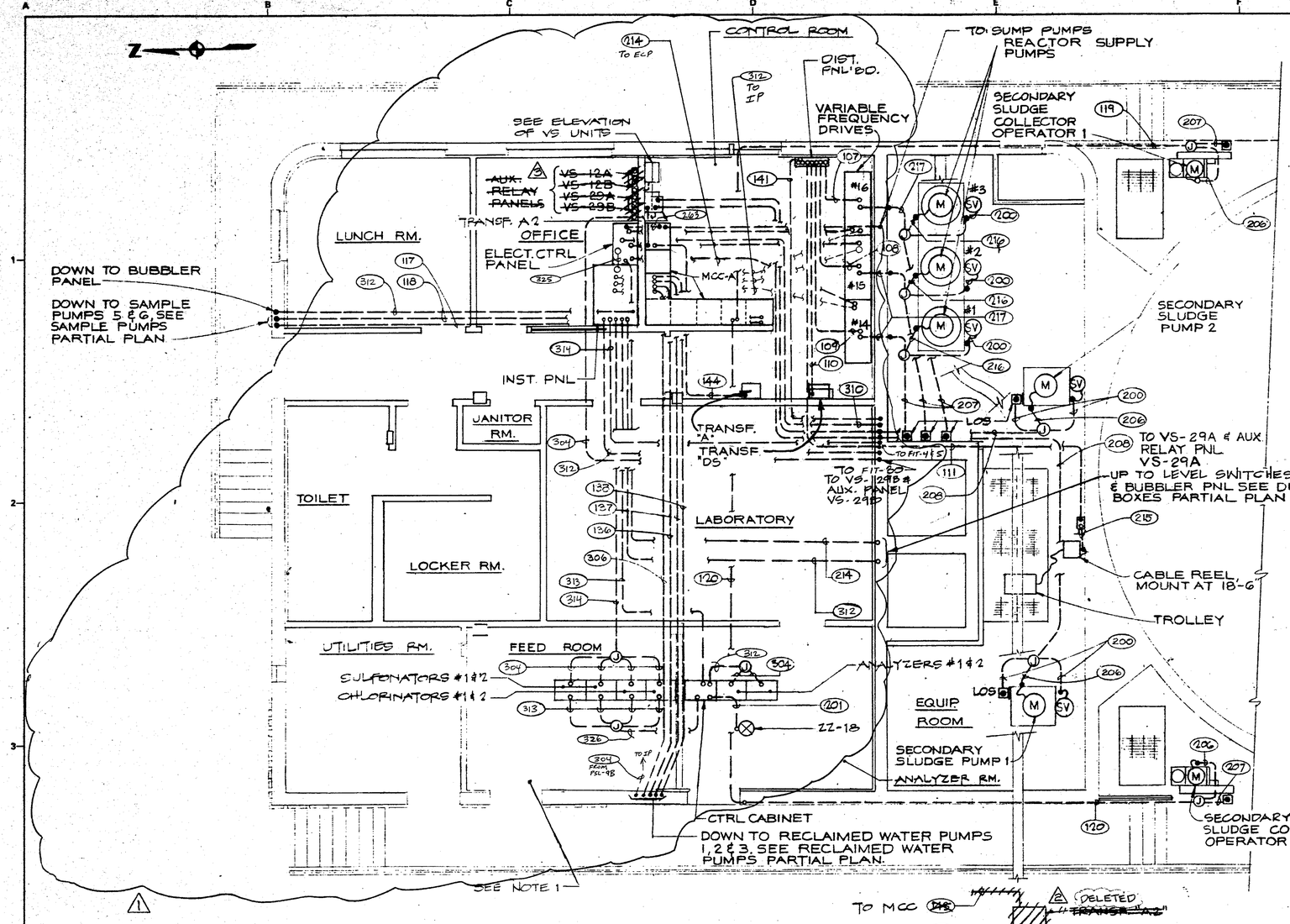


CONTROL BUILDING
PLAN @ EL. 115.0 & 104.0
SCALE: 1/4" = 1'-0"

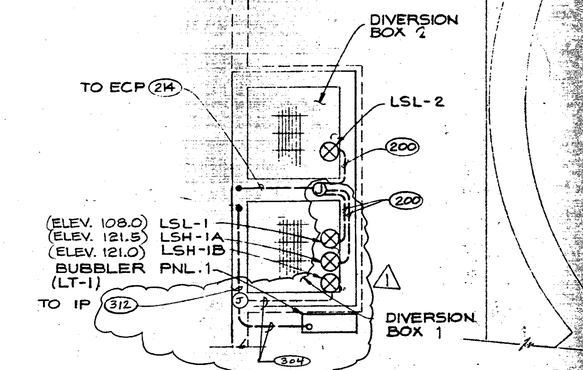


PARTIAL PLAN @ EL. 128.0
DIVERSION BOXES
SCALE: 1/4" = 1'-0"

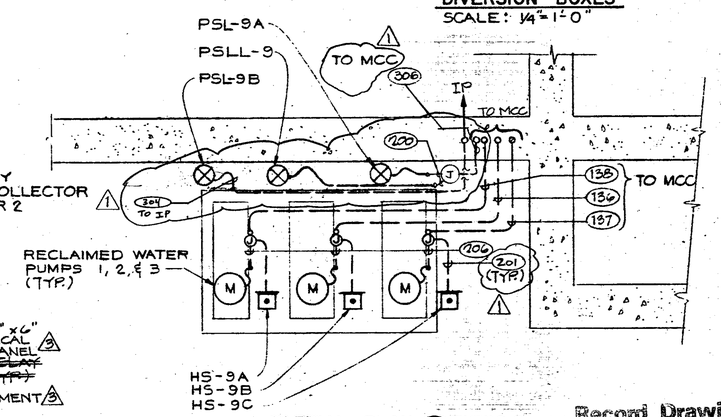


PARTIAL PLAN @ EL. 110.0
RECLAIMED WATER PUMPS
SCALE: 1/2" = 1'-0"

NOTE: FOR CONDUITS ENTERING THE CONTROL BUILDING FROM THE ACCESS PLATFORM REFER TO SH. E-12, DETAIL 2. FOR CLARITY, THESE CONDUITS ARE NOT SHOWN HERE.

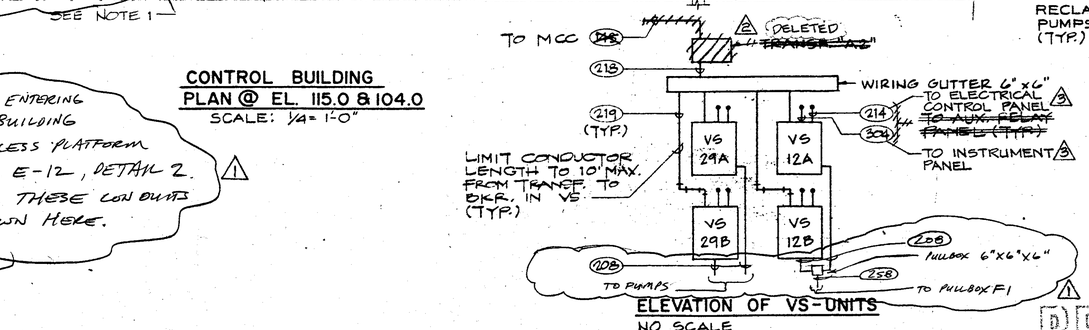


ELEVATION OF VS-UNITS
NO SCALE

Record Drawing
Those record drawings have been prepared, in part, on the basis of information compiled and furnished by others. Kennedy/Jenks/Chilton is not responsible for any errors or omissions in this document as a result of information provided by others.
Dated APR. 29, 19 88

RECORD DRAWING

GRAPHIC SCALE
1/2" = 1'-0" 0 1 2 3 4 5
1/4" = 1'-0" 0 4 8 12

| Revised | Description | Submit. | Appr'd. | Date |
|---|---|---|---|---|
| 3 | FIELD CHANGE | | | |
| 2 | CO NO. 25 | | | |
| 1 | CO NO. 10 | | | |

Refer to Tracing for Latest Revision

Reference Information and Notes:
1. RM. IS CORROSIVE ATMOSPHERE. PROVIDE CONDUIT SEAL FOR CONDUIT THAT LEAVES THE BLDG.

Designed RDS/AA
Drawn AYS/LCS
Checked
Date 1/29/01

Wastewater Plant Improvements C-06-2464
Sausalito-Marin City Sanitary District
Kennedy/Jenks Engineers San Francisco
Submitted: Walter J. Gamma C5370
Approved: Robert J. Greco

POWER PLANS 2

Scale AS NOTED
Job No. 0112
Sheet E-10 of

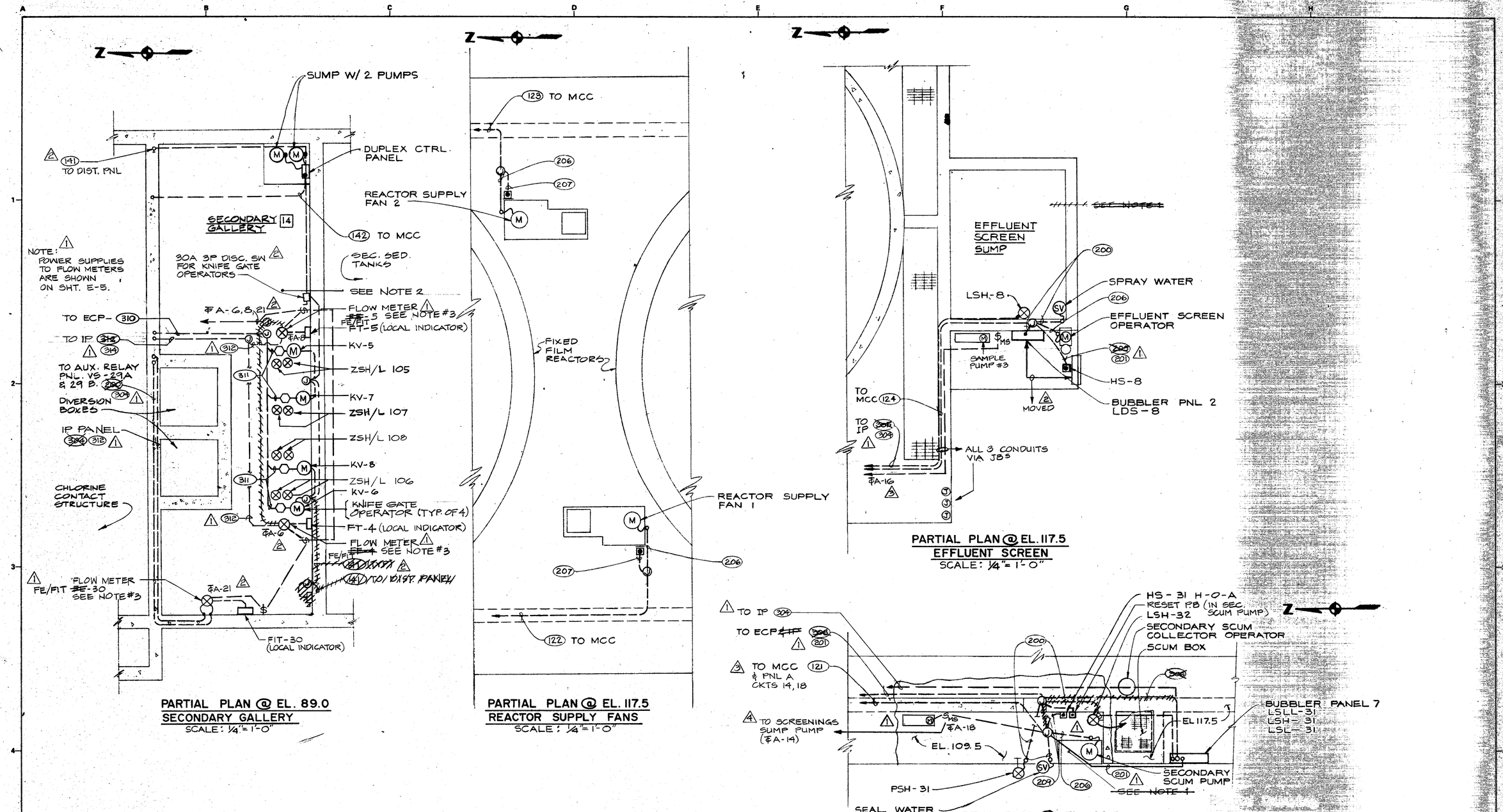


Record Drawing
These record drawings have been prepared, in part, on the basis of information compiled and furnished by others. Kennedy/Jenks/Chilton is not responsible for any errors or omissions in this document as a result of information provided by others.
Dated APR. 29, 19 88

RECORD DRAWING

| Revised | Description | Submit. | Appr'd. | Date |
|---|---|---|---|---|
| 4 | CO NO. 24 | | | |
| 3 | CO NO. 57 | | | |
| 2 | FIELD CHANGE | | | |
| 1 | CO NO. 16 | | | |

Refer to Tracing for Latest Revision

**Reference Information and Notes:**

1. HAZARDOUS LOCATION, CLASS I, DIV. I, GROUPS C&D. PROVIDE CONDUIT SEAL FOR EVERY CONDUIT THAT LEAVES THE BLDG.
2. AREA IS DAMP LOCATION.
3. FOR FLOW METER DETAIL SEE SHT. E-19.

Designed RDS/AA
Drawn AYS/LCS
Checked JWS
Date 1/29/81

**Wastewater Plant Improvements** C-06-2464
**Sausalito - Marin City Sanitary District**

Kennedy/Jenks Engineers — San Francisco
Submitted: Walter L. Grossman C9370
Approved: Robert J. Lewis

POWER PLANS 3

Scale 1/4"=1'-0"
Job No. 0112
Sheet E-11 of

94

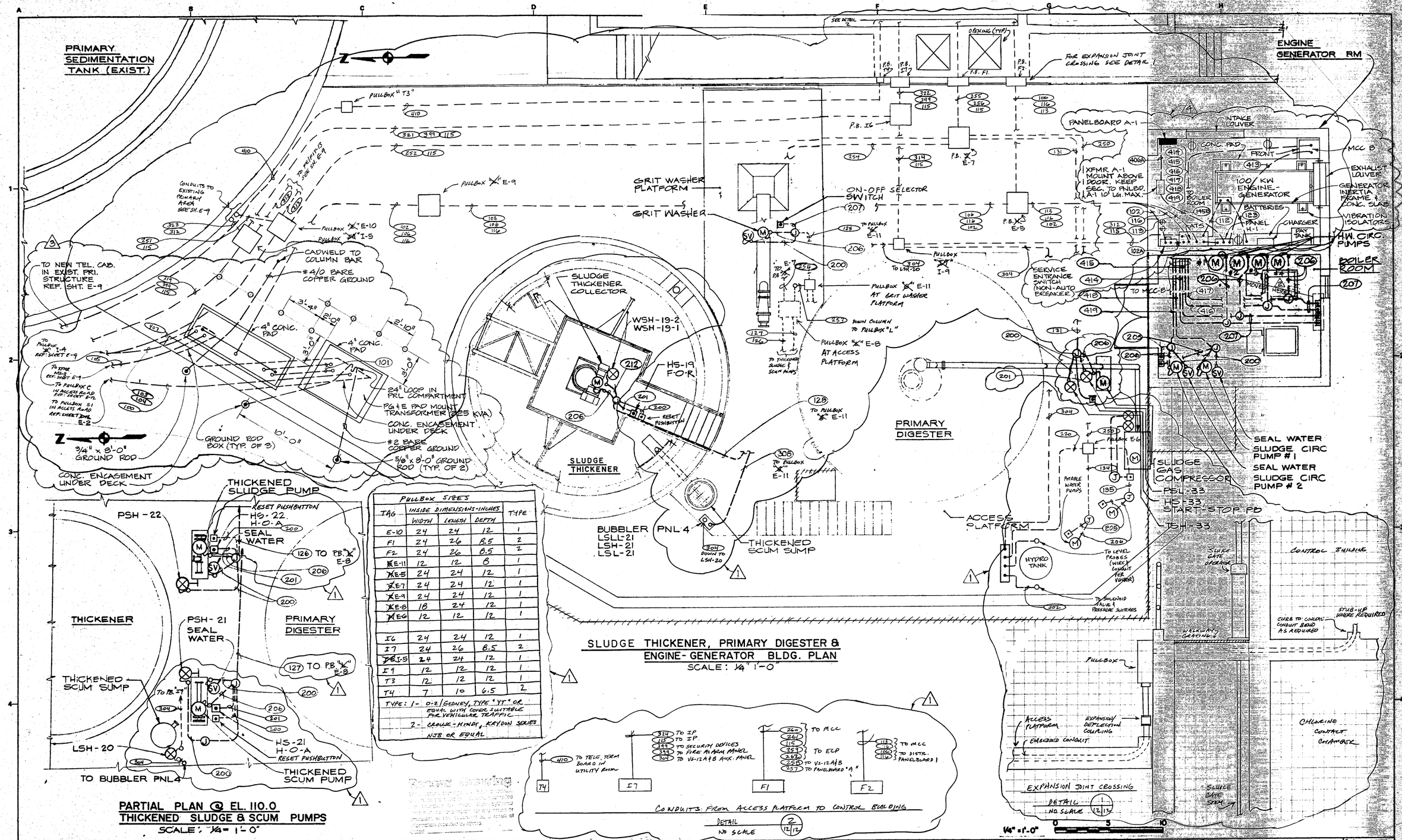


| PULLBOX SIZES | | | | |
|---|---|---|---|---|
| TAG | INSIDE DIMENSIONS-INCHES WIDTH | LENGTH | DEPTH | TYPE |
| E-10 | 24 | 24 | 12 | 1 |
| F1 | 24 | 26 | 8.5 | 2 |
| F2 | 24 | 26 | 8.5 | 2 |
| ~~X~~E-11 | 12 | 12 | 8 | 1 |
| ~~X~~E-5 | 24 | 24 | 12 | 1 |
| ~~X~~E-7 | 24 | 24 | 12 | 1 |
| ~~X~~E-9 | 24 | 24 | 12 | 1 |
| ~~X~~E-8 | 18 | 24 | 12 | 1 |
| ~~X~~E-6 | 12 | 12 | 12 | 1 |
| | | | | |
| I6 | 24 | 24 | 12 | 1 |
| I7 | 24 | 26 | 8.5 | 2 |
| ~~X~~I-5 | 24 | 24 | 12 | 1 |
| I9 | 12 | 12 | 12 | 1 |
| T3 | 12 | 12 | 12 | 1 |
| T4 | 7 | 10 | 6.5 | 2 |

TYPE: 1 - O-Z/GEDNEY, TYPE "YT" OR EQUAL WITH COVER SUITABLE FOR VEHICULAR TRAFFIC
2 - CROUSE-HINDS, KRYDON SERIES NJB OR EQUAL

| Revised | Description | Submit. | Appr'd. | Date |
|---|---|---|---|---|
| 4 | CO NO. 12 | | | |
| 3 | CO NO. 59 | | | |
| 2 | FIELD CHANGE | | | |
| 1 | CO NO. 16 | | | |

Refer to Tracing for Latest Revision

Reference Information and Notes:

Record Drawing
These record drawings have been prepared in part, on the basis of information compiled and furnished by others. Kennedy/Jenks/Chilton is not responsible for any errors or omissions in this document as a result of information provided by others.
Dated APR. 29, 1988

RECORD DRAWING

Designed RDS/AA
Drawn LCS
Checked
Date 1/29/81

Wastewater Plant Improvements C-06-2484
Sausalito-Marin City Sanitary District

Kennedy/Jenks Engineers San Francisco
Submitted: C9370 Approved:

POWER PLANS 4

Scale 1/4" = 1'-0"
Job No. 0112
Sheet E-12 of

## FIXTURE SCHEDULE

| FIXTURE TYPE | LAMP NO. | LAMP TYPE | LAMP WATTS | 1Ø VOLTS | MOUNTING ARRGT | DESCRIPTION | CATALOG NO. |
|---|---|---|---|---|---|---|---|
| A | 1 | INCAND. | 150 | 120 | RECESS | OUTDOOR, SQ. DOWNLIGHT W/ A FLAT FRESNEL LENS & GALVANIZED STEEL HOUSING. | McPHILBEN 4-811BE DEVINE LIGHTING D415-A3 |
| B | 1 | INCAND. | 300 | 120 | WALL | WEATHERPROOF W/ A PRISMATIC LENS, A VANDALPROOF SHIELD & A CORROSION RESISTANT FINISH. | STONCO LINE 513-300LN |
| C | 2 | FLUOR. | 35 | 120 | RECESS | COMMERCIAL, NON-AIR HANDLING TROFFER W/ A PRISMATIC VIRGIN ACRYLIC LENS & BAKED WHITE ENAMEL FINISH. | DAY-BRITE 4G21-6X9-4 COLUMBIA 5112G |
| D | 2 | FLUOR. | 35 | 120 | WALL | COMMERCIAL W/ AN ACRYLIC DIFFUSER, ALUMINUM HOUSING & A CLEAR LACQUER FINISH. | McPHILBEN 37-80A MILLER FM-2121-04 |
| E | 1 | FLUOR. | 35 | 120 | SURFACE | COMMERCIAL, WRAP-AROUND W/ A CLEAR ACRYLIC LENS & BAKED WHITE ENAMEL FINISH. | HOLOPHANE 6100-A MILLER DA-1106-04 |
| F | 1 | FLUOR. | 35 | 120 | PENDANT | INDUSTRIAL, ENCLOSED & GASKETED, THERMOPLASTIC HOUSING & A HIGH-IMPACT ACRYLIC LENS. | BENJAMIN FA-2414-4R MILLER KW-2101-04 |
| G | 1 | INCAND. | 200 | 120 | WALL | INDUSTRIAL, ENCLOSED & GASKETED W/ GLASS GLOBE CAST ALUMINUM GUARD & MALLEABLE IRON HOUSING. | APPLETON GSW-202-G |
| H | 1 | INCAND. | 100 | 120 | WALL | SAME AS TYPE G FIXTURE. | APPLETON GSW-102-G |
| I | 1 | INCAND. | 100 | 120 | ~~SURFACE~~ PENDANT (6) | INDUSTRIAL, WATERTIGHT W/ CLEAR GLASS GLOBE & FIBERGLASS HOUSING. | CROUSE-HINDS NDA-22G |
| J | 1 | INCAND. | 200 | 120 | SURFACE | INDUSTRIAL, EXPLOSION-PROOF W/ CLEAR GLASS GLOBE & COPPER-FREE ALUMINUM GUARD. | APPLETON AC-1575 |
| K | 1 | PAR | 250 | 120 | SURFACE | INDUSTRIAL, WEATHERPROOF, SPOTLIGHT W/ BRACKET ARMS, ALUMINUM HOUSING & CORROSION RESISTANT FINISH. | STONCO LINE D4440 McGILL 5300-7400 |
| L | 1 | INCAND. | 150 | 120 | WALL | INDUTRIAL, WEATHERPROOF W/ CLEAR GLASS GLOBE, DIE-CAST ALUMINUM HOUSING & GUARD. | HUBBELL AOWXF-11110 |
| M | 1 | FLUOR. | 35 | 120 | SURFACE | INDUSTRIAL, OPEN-TYPE W/ A REFLECTOR & A BAKED WHITE ENAMEL FINISH. | COLUMBIA FS-140-M4 |
| N | 2 | FLUOR. | 35 | 120 | PENDANT | SAME AS TYPE F FIXTURE. | BENJAMIN FA-2424-4R MILLER KW-2101-04 |
| O | 1 | INCAND. | 18 | 120 | WALL | INDUSTRIAL, EMERGENCY LIGHT W/ A SEALED & GASKETED, NEMA 4X, ENCLOSURE. | DUAL-LITE 4X7 |
| P | 1 | INCAND. | 18 | 120 | WALL | CORROSION RESISTANT, FAR-36, REMOTE EMERGENCY LIGHT HEAD. | DUAL-LITE EXT-P5-4X |
| Q | 1 | INCAND. | 150 | 120 | WALL | WEATHERPROOF, BULLET-TYPE FLOODLIGHT W/ DIE-CAST ALUMINUM HOUSING & CORROSION RESISTANT FINISH. | STONCO LINE 6700S HUBBELL S-630B |
| R | 2 | FLUOR. | 35 | 120 | SURFACE | SAME AS TYPE M FIXTURE. | COLUMBIA FI-240-M16 |

## PANELBOARD SCHEDULE "A1"

208/120 VOLTS, 3 PHASE, 4 WIRE — 100 AMP BUS — 90 AMP MAIN CIRCUIT BREAKER — MOUNTING: SURFACE

| CKT. NO. | DESCRIPTION | CONNECTED VOLT-AMPS A | B | C | TRIP ~~AMPS~~/ POLES | CKT. NO. | DESCRIPTION | CONNECTED VOLT-AMPS A | B | C | TRIP AMPS/ POLES |
|---|---|---|---|---|---|---|---|---|---|---|---|
| 1 | OUTSIDE BLDG., BOILER & GENERATOR ROOM RECEPT. | 1080 | | | 20/1 | 2 | THICKENER & PRIMARY DIGESTER AREA RECEPT. | 720 | | | 20/1 |
| 3 | OUTSIDE BLDG., BOILER & GENERATOR ROOM LIGHTS | | 620 | | 20/1 | 4 | ~~BATTERY CHARGER & JACKET HEATER~~ DAY TANK (5) | | 600 | | 15/1 |
| 5 | THICKENER & PRIMARY DIGESTER AREA LIGHTS | | | 1200 | 20/1 | 6 | SPARE | | | | 15/1 |
| 7 | BOILER | 828 | | | 15/1 | 8 | ~~SPARE~~ JACKET HEATER (X) | | | | 15/1 (2) |
| 9 | BOILER | | 828 | | 15/1 | 10 | ~~DAY TANK PUMP~~ " " | | ~~828~~ | | 15/1 (2) |
| 11 | SPARE | | | – | 20/1 | 12 | SPARE | | | – | 20/1 |
| 13 | SPARE | – | | | 15/1 | 14 | SPARE | | | | 15/1 |
| 15 | SPACE | | – | | 1P | 16 | SPACE | | | | 1P |
| 17 | SPACE | | | – | 1P | 18 | SPACE | | | | 1P |
| SUBTOTALS | | 1908 | 1448 | 1200 | | | | 720 | ~~1428~~ 600 | | |
| PHASE TOTALS | Ø A = 2628 | Ø B = 2876 | | Ø C = 1200 | | | | | | | |
| TOTAL VOLT-AMPS | 6,704 | | | | | | | | | | |

## PANELBOARD SCHEDULE "MS-1"

208/120 VOLTS, 3 PHASE, 4 WIRE — 225 AMP BUS — 150 AMP MAIN CIRCUIT BREAKER — MOUNTING: SURFACE

| CKT. NO. | DESCRIPTION | CONNECTED VOLT-AMPS A | B | C | TRIP AMPS/ POLES | CKT. NO. | DESCRIPTION | CONNECTED VOLT-AMPS A | B | C | TRIP AMPS/ POLES |
|---|---|---|---|---|---|---|---|---|---|---|---|
| 1 | SULFUR STO. BLDG. LIGHTS | 730 | | | 20/1 | 2 | SAFETY EQUIP. BLDG. LIGHTS RECEPT. & EMERG. LIGHT | 524 | | | 20/1 |
| 3 | SULFUR STO. BLDG. RECEPT. | | 720 | | 20/1 | 4 | CHLORINE STO. BLDG. & SAFETY EQUIP. BLDG. OUTSIDE LIGHTS | | 1050 | . | 20/1 |
| 5 | SULFUR DIOXIDE REGULATOR HEATERS | | | 100 | 15/1 | 6 | CHLORINE STO. BLDG. LIGHTS | | | 1040 | 20/1 |
| 7 | SULFUR STO. BLDG. UNIT HTR. 2 | 138 | | | 15/1 | 8 | CHLORINE STO. BLDG. RECEPT. | 1080 | | | 20/1 |
| 9 | SULFUR STO. BLDG. EXH. FAN | | 236 | | 15/1 | 10 | CHLORINE REGULATOR HEATERS | | 200 | | 15/1 |
| 11 | SULFUR STO. BLDG. EMERG. EXH. FAN | | | 1127 | 25/1 | 12 | CHLORINE STO. BLDG. UNIT HTR. 1 | | | 138 | 15/1 |
| 13 | CHLORINE STO. BLDG. EXH. FAN 3 | 480 | | | | 14 | HOIST & TROLLEY | 1164 | | | |
| 15 | CHLORINE STO. BLDG. EXH. FAN 3 | | 480 | | 15/3 | 16 | HOIST & TROLLEY | | 1164 | | 20/3 |
| 17 | CHLORINE STO. BLDG. EXH. FAN 3 | | | 480 | | 18 | HOIST & TROLLEY | | | 1164 | |
| 19 | CHLORINE STO. BLDG. EXH. FAN 4 | 480 | | | | 20 | SPARE | – | | | 15/1 |
| 21 | CHLORINE STO. BLDG. EXH. FAN 4 | | 480 | | 15/3 | 22 | SPARE | | – | | 15/1 |
| 23 | CHLORINE STO. BLDG. EXH. FAN 4 | | | 480 | | 24 | SPARE | | | – | 15/1 |
| 25 | SPARE | | | | 15/1 | 26 | SPARE | – | | | 20/1 |
| 27 | SPARE | | – | | 15/1 | 28 | SPARE | | – | | 20/1 |
| 29 | SPARE | | | – | 15/1 | 30 | SPARE | | | – | 20/1 |
| SUBTOTALS | | 1828 | 1916 | 2187 | | | | 2768 | 2414 | 2342 | |
| PHASE TOTALS | Ø A = 4596 | Ø B = 4330 | | Ø C = 4529 | | | | | | | |
| TOTAL VOLT-AMPS | 13455 | | | | | | | | | | |

## PANELBOARD SCHEDULE "A"

208/120 VOLTS, 3 PHASE, 4 WIRE — 400 AMP BUS — 300 AMP MAIN CIRCUIT BREAKER — MOUNTING: SURFACE

| CKT. NO. | DESCRIPTION | CONNECTED VOLT-AMPS A | B | C | TRIP AMPS/ POLES | CKT. NO. | DESCRIPTION | CONNECTED VOLT-AMPS A | B | C | TRIP AMPS/ POLES |
|---|---|---|---|---|---|---|---|---|---|---|---|
| 1 | LUNCH & CONTROL RM., OFFICE & CORRIDOR LIGHTS | 880 | | | 20/1 | 2 | ELECTRICAL CONTROL PANEL | 500 | | | 15/1 |
| 3 | LUNCH RM. & OFFICE RECEP. | | 1080 | | 20/1 | 4 | INSTRUMENT PANEL | | 500 | | 15/1 |
| 5 | JANITOR & LOCKER RM., TOILET & CORRIDOR LIGHTS | | | 320 | 20/1 | 6 | FLOW METER FE-~~X~~ FIT 4 (1) | | | 550 | 15/1 |
| 7 | LABORATORY LIGHTS | 640 | | | 20/1 | 8 | FLOW METER FE-~~X~~ FIT 5 (1) | 550 | | | 15/1 |
| 9 | LABORATORY RECEPT. | | 900 | | 20/1 | 10 | CONTROL RM., JANITOR RM. & TOILET RECEPT. | | 900 | | 20/1 |
| 11 | LABORATORY RECEPT. | | | 720 | 20/1 | 12 | FLOW METERS FE-13 & FE-30 | | | ~~360~~ 180 | 15/1 |
| 13 | UTILITIES FEED & ANALYZER RM. LIGHTS | 400 | | | 20/1 | 14 | ~~SPACE~~ SCREENINGS SUMP PUMP | | | | 1P (3) |
| 15 | UTILITIES FEED & ANALYZER RM. RECEPT. | | 1440 | | 20/1 | 16 | ~~SPACE~~ SAMPLE PUMP 3 | | | | 1P (2) |
| 17 | SULFONATORS #1 & #2, ~~CHLORINATOR #1 & #2~~ | | | 460 | 15/1 | 18 | ~~SPACE~~ SAMPLE PUMP 4 | | | | 1P |
| 19 | ~~SAMPLER #1~~ ANAL. RM. RECEP. | 1150 | | | 15/1 | 20 | SPACE | | | | 1P |
| 21 | ~~SAMPLER #2~~ FLOW METER FE/FIT 20 | | ~~360~~ 180 | | 15/1 | 22 | SECURITY ALARM PNL.* | | 320 | | 15/1 (1) |
| 23 | ~~SAMPLER #3~~ ANAL. RM. RECEP. | | | 1150 | 15/1 | 24 | ANALYZER #1 & #2 CONTROL PNL | | | 730 | 15/1 |
| 25 | SPARE | – | | | 20/1 | 26 | PIPE GALLERY AND EQUIPMENT RM. LIGHTS (4) | 700 | | | 20/1 |
| 27 | OUTDOOR LIGHTS - NO. & WEST WALL | | 750 | | 20/1 | 28 | EQUIPMENT RM. RECEPT. | | 540 | | 20/1 |
| 29 | OUTDOOR LIGHTS - NORTH & EAST WALL | | | 1200 | 20/1 | 30 | PIPE GALLERY LIGHTS | | | 600 | 20/1 |
| 31 | OUTDOOR LIGHTS - F.F.R. AREA | 1740 | | | 20/1 | 32 | ~~SPACE~~ SAMPLE PUMP 5 | | | | 1P (2) |
| 33 | EAST VIEW PORT & F.F.R. STAIR LIGHTS | | 1840 | | 20/1 | 34 | ~~SPACE~~ SAMPLE PUMP 6 | | | | 1P |
| 35 | WEST VIEW PORT & WALKWAY AREA LIGHTS | | | 880 | 20/1 | 36 | HYDRO TANK CONTROL | | | 100 | 15/1 |
| 37 | ~~AUX. RELAY PNL. VS-12A~~ SPARE (4) | 500 | | | 15/1 | 38 | CHLORINE CONTACT TANK LIGHTS | 600 | | | 20/1 |
| 39 | ~~AUX. RELAY PNL. VS-12B~~ SPARE | | 500 | | 15/1 | 40 | ~~AUX. RELAY PNL. VS-29A~~ SPARE | | 500 | | 15/1 |
| 41 | SPARE | | | – | 20/1 | 42 | ~~AUX. RELAY PNL. VS-29B~~ SPARE | | | 500 | 15/1 (4) |
| SUBTOTALS | | 5310 | ~~7660~~ 6690 | 4730 | | | | 2350 | 2760 | ~~2840~~ 2660 | |
| PHASE TOTALS | Ø A = 7660 | Ø E = 10,420 | | Ø C = 7570 | | | | | | | |
| TOTAL VOLT-AMPS | 25650 | | | | | | | | | | |

* F.A. CABINET, CHLOR. & SO2 LEAK DETS.

| Revised | Description | Submit. | Appr'd. | Date |
|---|---|---|---|---|
| (6) | CO NO. 58 | | | |
| (5) | CO NO. 50 | | | |
| (4) | FIELD CHANGE | | | |
| (3) | CO NO. 24 | | | |
| (2) | CO NO. 57 | | | |
| (1) | CLARIFICATION | | | |

Refer to Tracing for Latest Revision

Reference Information and Notes:

**Record Drawing**

These record drawings have been prepared, in part, on the basis of information compiled and furnished by others. Kennedy/Jenks/Chilton is not responsible for any errors or omissions in this document as a result of information provided by others.
Dated APR. 21, 1988

Designed AA
Drawn LCS
Checked JWS
Date 1/29/81

**Wastewater Plant Improvements** C-06-2464
**Sausalito - Marin City Sanitary District**

Kennedy/Jenks Engineers — San Francisco
Submitted: Walter Hartman C9370 — Approved: [signature]

SCHEDULES

Scale NONE
Job No. 0112
Sheet E-13 of

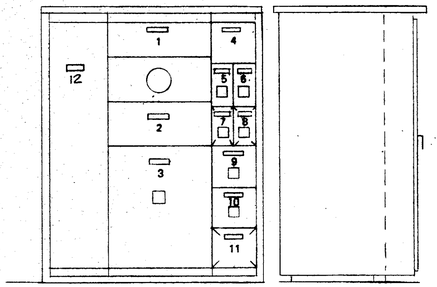


FRONT ELEVATION

(ENCLOSURE DOORS NOT SHOWN)

SIDE ELEVATION

MAIN SWITCHBOARD I

NO SCALE

| NO. | NAMEPLATE INSCRIPTION |
|---|---|
| 1. | MAIN SWITCHBOARD 1 |
| 2. | UTILITY CURRENT TRANSFORMERS |
| 3. | MAIN |
| 4. | ~~TRANSFORMER MS-3 FEEDER~~ |
| 5. | TRANSFORMER MS-1 FEEDER |
| 6. | TRANSFORMER MS-2 FEEDER |
| 7. | (BLANK) |
| 8. | (BLANK) |
| 9. | DIST. SWITCHBOARD 1 FEEDER |
| 10. | MCC "A" FEEDER |
| 11. | (BLANK) |
| 12. | PULL SECTION |

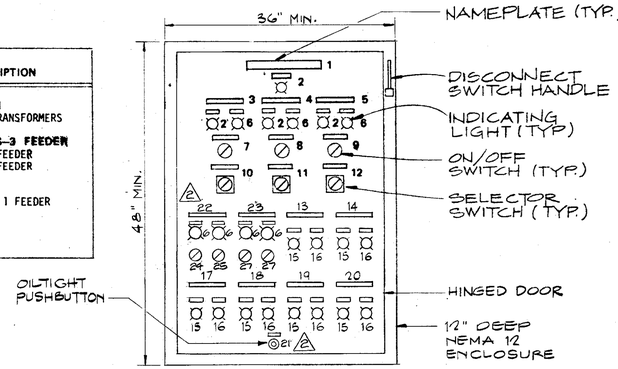


FRONT ELEVATION

| NO. | NAMEPLATE INSCRIPTION |
|---|---|
| 1. | ELECTRICAL CONTROL PANEL |
| 2. | POWER ON |
| 3. | REACTOR SUPPLY PUMP 1 |
| 4. | REACTOR SUPPLY PUMP 2 |
| 5. | REACTOR SUPPLY PUMP 3 |
| 6. | RUN |
| 7. | SWITCH HS-14A |
| 8. | SWITCH HS-15A |
| 9. | SWITCH HS-16A |
| 10. | SELECTOR SWITCH HS-14B |
| 11. | SELECTOR SWITCH HS-15B |
| 12. | SELECTOR SWITCH HS-16B |
| 13 | ~~SECONDARY EFFLUENT RECIRC. VALVE KV-9~~ SPARE ⚠1 |
| 14 | ~~SECONDARY EFFLUENT RECIRC. VALVE KV-10~~ SPARE |
| 15 | FULLY OPEN |
| 16 | FULLY CLOSED |
| 17 | KNIFE VALVE KV-5 |
| 18 | KNIFE VALVE KV-6 |
| 19 | KNIFE VALVE KV-7 |
| 20 | KNIFE VALVE KV-8 |
| 21 | KNIFE VALVE LOW FLOW RESET |
| 22 | PRIMARY SLUDGE PUMPS PUMP NO. 1 PUMP NO. 2 |
| 23 | SECONDARY SLUDGE PUMPS PUMP NO. 1 PUMP NO. 2 |
| 24 | SWITCH HS-12A |
| 25 | " HS-12B |
| 26 | " HS-29A |
| 27 | " HS-29B |

⚠2

ELECTRICAL CONTROL PANEL (ECP)

NO SCALE

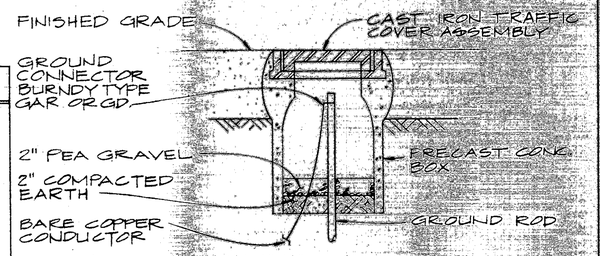


GROUND ROD BOX INSTALLATION

DETAIL 2 (14|14)

NO SCALE

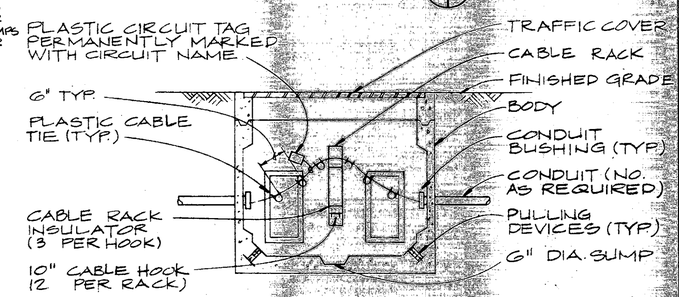


PRECAST CONCRETE PULLBOX INSTALLATION

DETAIL 3 (14|14)

NO SCALE

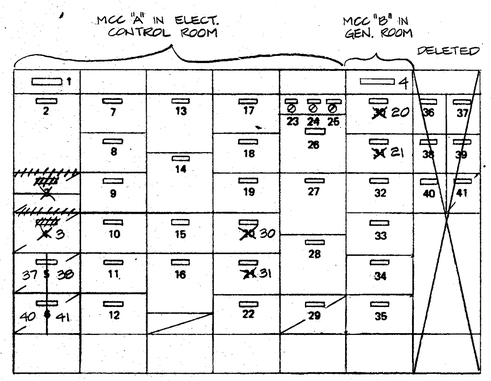


NOTE:

REFER TO CONTROL RM. LAYOUT PLAN ON DWG. E-10 FOR RIGHT ANGLED CONFIGURATION.

FRONT ELEVATION

| NO. | NAMEPLATE INSCRIPTION |
|---|---|
| 1. | MOTOR CONTROL CENTER "A" |
| 2. | MAIN CIRCUIT BREAKER |
| 3. | (BLANK) |
| 4. | ~~(BLANK)~~ MOTOR CONTROL CENTER "B" |
| ~~5.~~ | ~~(BLANK)~~ |
| ~~6.~~ | ~~(BLANK)~~ |
| 7. | PRIMARY SCUM PUMP |
| 8. | SECONDARY SLUDGE COLLECTOR OPERATOR 1 |
| 9. | SECONDARY SLUDGE COLLECTOR OPERATOR 2 |
| 10. | SECONDARY SCUM PUMP |
| 11. | FIXED FILM REACTOR SUPPLY FAN 1 |
| 12. | FIXED FILM REACTOR SUPPLY FAN 2 |
| 13. | EFFLUENT SCREEN |
| 14. | THICKENED SLUDGE PUMP |
| 15. | THICKENED SCUM PUMP |
| 16. | SLUDGE THICKENER DRIVE |
| 17. | SUPERNATANT PUMP 1 |
| 18. | SUPERNATANT PUMP 2 |
| 19. | GRIT WASHER |
| 20. | DIGESTED SLUDGE CIRCULATION PUMP 1 |
| 21. | DIGESTED SLUDGE CIRCULATION PUMP 2 |
| 22. | SLUDGE GAS COMPRESSOR |
| 23. | SUPERNATANT PUMP LEAD/LAG SELECTION |
| 24. | RECLAIMED WATER PUMP LEAD/LAG/FOLLOW SELECTION |
| 25. | POTABLE WATER PUMP LEAD/LAG SELECTION |
| 26. | RECLAIMED WATER PUMP 1 |
| 27. | RECLAIMED WATER PUMP 2 |
| 28. | RECLAIMED WATER PUMP 3 |
| 29. | (BLANK) |
| 30. | POTABLE WATER PUMP 1 |
| 31. | POTABLE WATER PUMP 2 |
| 32. | H.W. CIRCULATING PUMP 1 |
| 33. | H.W. CIRCULATING PUMP 2 |
| 34. | H.W. CIRCULATING PUMP 3 |
| 35. | H.W. CIRCULATING PUMP 4 |
| ~~36.~~ | ~~KNIFE GATE FEEDER~~ |
| 37. | * SUMP PUMPS (SEC. GALLERY) FEEDER |
| 38. | ~~TRANSFORMER A2~~ FEEDER - SLUDGE PUMPS |
| ~~39.~~ | ~~TRANSFORMER A1 FEEDER~~ |
| 40. | TRANSFORMER A FEEDER |
| 41. | (BLANK) |

*DELETED ⚠4

MOTOR CONTROL CENTER "A" & "B" ⚠3

NO SCALE

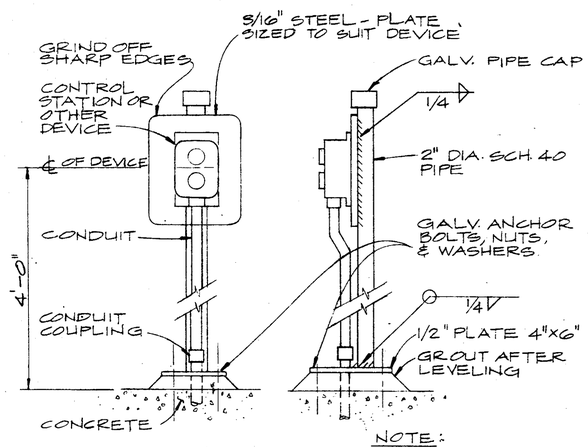


NOTE:

1. HOT DIP GALVANIZE STAND AFTER FABRICATION
2. BOLT STAND TO CHECKER PLATE AT APPROPRIATE LOCATIONS

EQUIPMENT MOUNTING STAND

DETAIL 1 (14|14)

NO SCALE

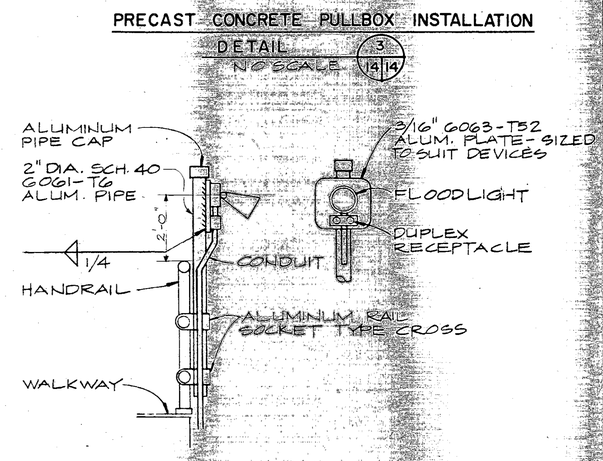


FLOODLIGHT MOUNTING

DETAIL 4 (6|14)

NO SCALE

Record Drawing

These record drawings have been prepared in part on the basis of information compiled and furnished by others. Kennedy/Jenks/Chilton is not responsible for any errors or omissions in this document as a result of information provided by others.

Dated APR. 29, 1988

| Revised | Description | Submit. | Appr'd. | Date |
|---|---|---|---|---|
| 4 | CO NO. 25 | | | |
| 3 | CO. NO. 12 | | | |
| 2 | FIELD CHANGE | | | |
| 1 | CLARIFICATION | | | |

Refer to Tracing for Latest Revision

Reference Information and Notes:

Designed RDS
Drawn CAB
Checked JWS
Date 1-29-81

Wastewater Plant Improvements C-06-2464
Sausalito - Marin City Sanitary District

Kennedy/Jenks Engineers San Francisco

Submitted: CSSiO Approved:

ELEVATIONS AND DETAILS

Scale NONE
Job No. 0112
Sheet E-14
of

97

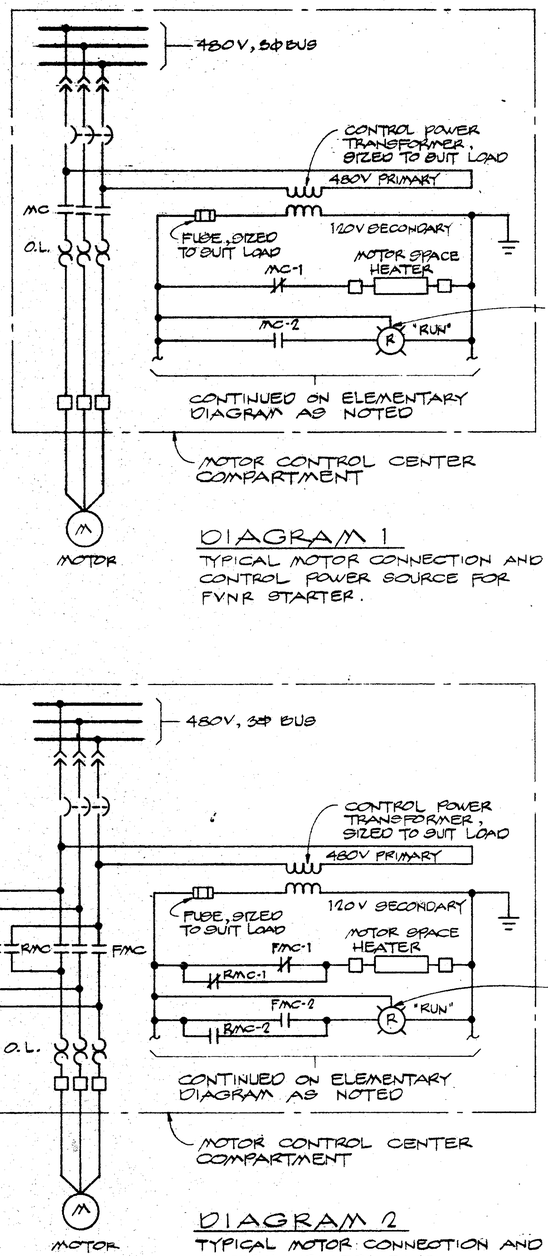


DIAGRAM 1

TYPICAL MOTOR CONNECTION AND CONTROL POWER SOURCE FOR FVNR STARTER.




DIAGRAM 2

TYPICAL MOTOR CONNECTION AND CONTROL POWER SOURCE FOR FVR STARTER.

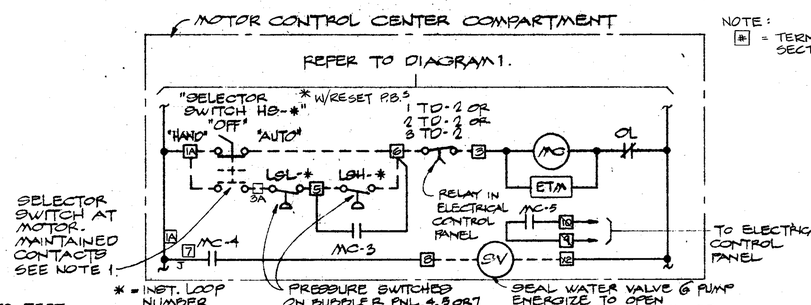


NOTE: [#] = TERM. # IN MCC SECTIONS (UNITS)

DIAGRAM 3

TYPICAL FOR:

| | INST. LOOP | MCC | UNIT #5 |
|---|---|---|---|
| THICKENED SCUM PUMP | 21 | | 3H |
| PRIMARY SCUM PUMP | 24 | MCC-A | 2B |
| SECONDARY SCUM PUMP | 31 | | 2H |

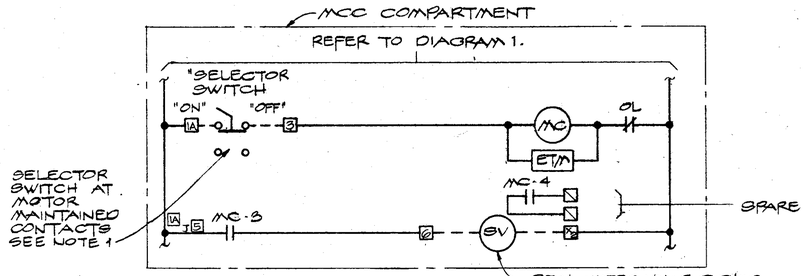


DIAGRAM 4

TYPICAL FOR:

| | | |
|---|---|---|
| DIGESTED SLUDGE RECIRCULATION PUMP # 1 | MCC-B | 1B |
| DIGESTED SLUDGE RECIRCULATION PUMP # 2 | | 1D |

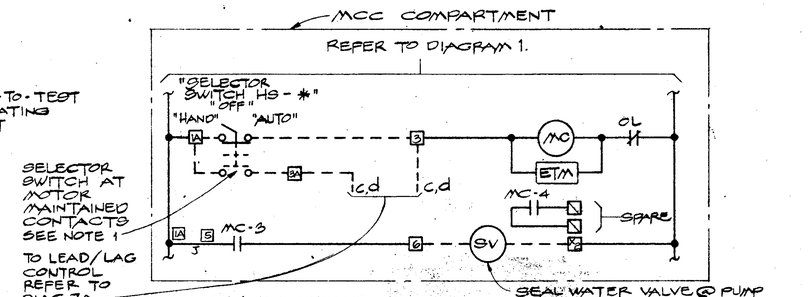


DIAGRAM 5

TYPICAL FOR:

| | INST. LOOP | MCC-A |
|---|---|---|
| SUPERNATANT PUMP 1 | 25A | 4B |
| SUPERNATANT PUMP 2 | 25B | 4D |

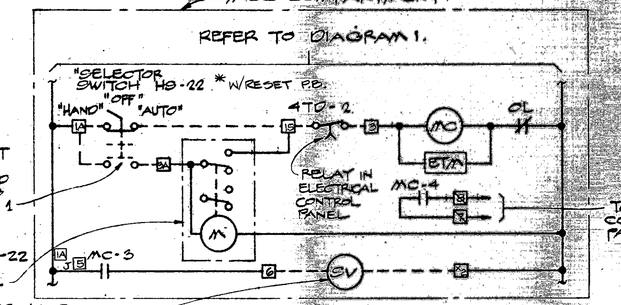


DIAGRAM 6

THICKENED SLUDGE PUMP — INST. LOOP 22 — MCC-A 3F

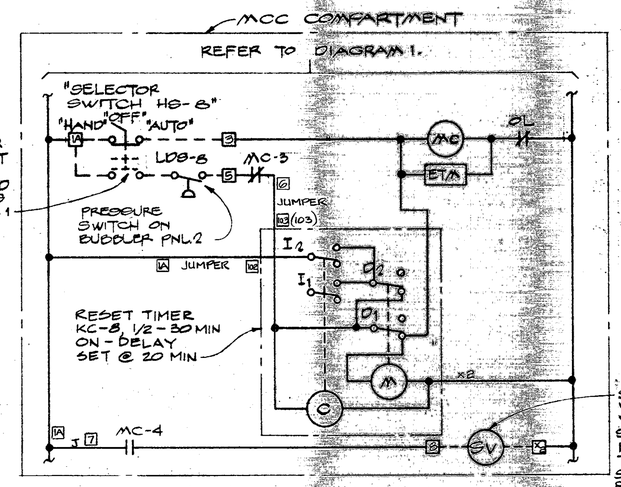


DIAGRAM 7

EFFLUENT SCREEN — INST. LOOP 8

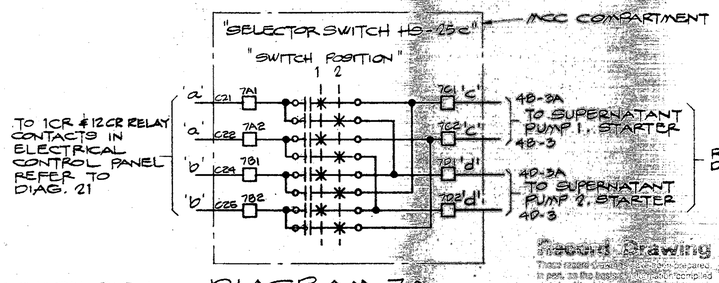


DIAGRAM 7A

SUPERNATANT PUMP LEAD/LAG CONTROL

Record Drawing

These record drawings, based on information furnished in part, as the basis of which they were compiled and furnished by Kennedy/Jenks. Contractor is not responsible for any errors or omissions in the information furnished by Kennedy/Jenks.

Contractor provided by KJ Date APR 29 '88

REFER TO DRAWING

| Revised | Description | Submit. | Appr'd. | Date |
|---|---|---|---|---|
| 1 | FIELD TERMINAL NUMBERS ADDED | | | |

Refer to Tracing for Latest Revision

Reference Information and Notes:

1. PROVIDE MEANS FOR LOCKING IN THE "OFF" POSITION

Designed RDS
Drawn WL
Checked JWS
Date 1/29/81

Wastewater Plant Improvements C-06-2464
Sausalito - Marin City Sanitary District

Kennedy/Jenks Engineers — San Francisco

Submitted: Walter E. Hammer C9370 — Approved: Robert J. Amen

ELEMENTARY DIAGRAMS 1-7

Scale NONE
Job No. 0112
Sheet E-15 of

98

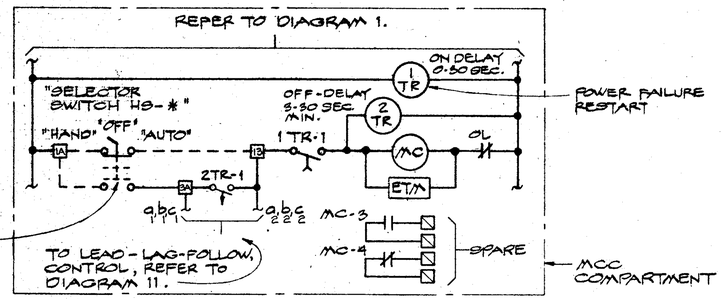


## DIAGRAM 8

TYPICAL FOR:

| | INST. LOOP | | |
|---|---|---|---|
| RECLAIMED WATER PUMP 1 | 9A | | 5F |
| RECLAIMED WATER PUMP 2 | 9B | MCC-A | 5J |
| RECLAIMED WATER PUMP 3 | 9C | | 5M |

| SELECTOR SWITCH HS-9 CONTACT DEVELOPMENT | | | | | | | | | |
|---|---|---|---|---|---|---|---|---|---|
| SWITCH POSITION | 1 | | | 2 | | | 3 | | |
| PUMP | 1 | 2 | 3 | 1 | 2 | 3 | 1 | 2 | 3 |
| LEAD | X | | | | X | | | | X |
| LAG | | X | | | | X | X | | |
| FOLLOW | | | X | X | | | | X | |

NOTE: 'X' INDICATES SWITCH CONTACT CLOSED.

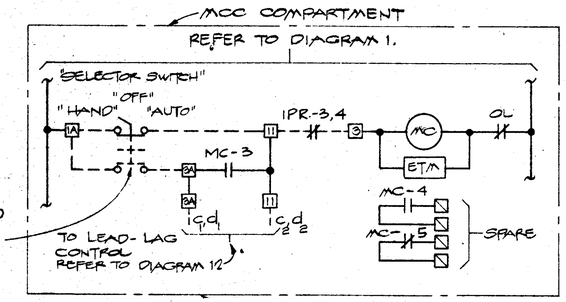


## DIAGRAM 9

TYPICAL FOR:

| | | |
|---|---|---|
| POTABLE WATER PUMP 1 | MCC-A | 4H |
| POTABLE WATER PUMP 2 | | 4K |

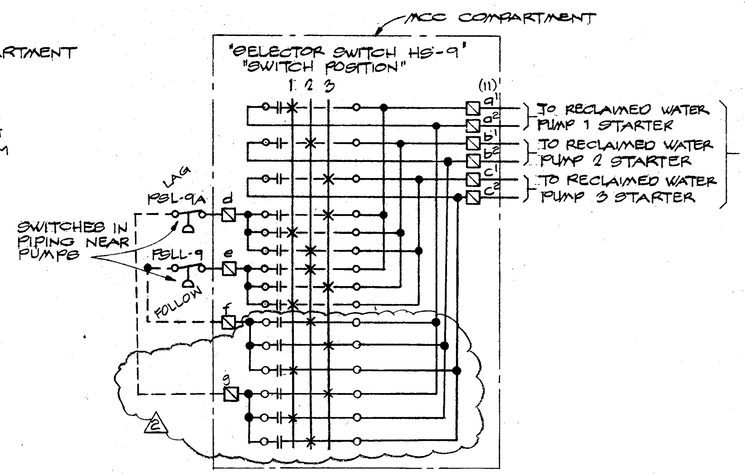


## DIAGRAM 11 △2

RECLAIMED WATER PUMP LEAD-LAG-FOLLOW CONTROL

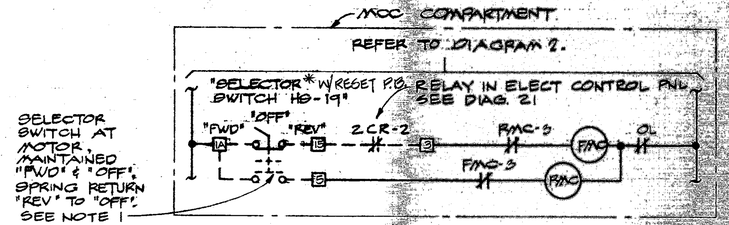


## DIAGRAM 13

SLUDGE THICKENER DRIVE — INST. LOOP 19 — MCC-A 3L

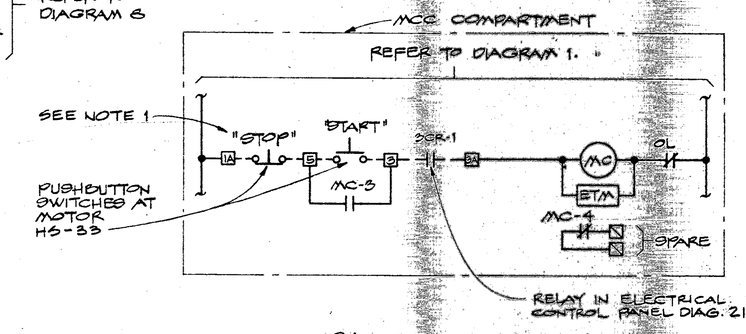


## DIAGRAM 14

SLUDGE GAS COMPRESSOR — INST. LOOP 95 — MCC-A 4M

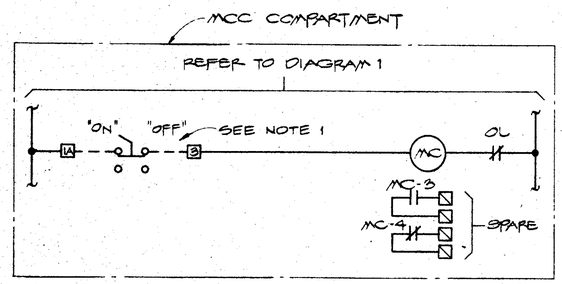


## DIAGRAM 10

TYPICAL FOR:

| | | |
|---|---|---|
| H.W. CIRCULATING PUMP 1 | MCC-B | 1F |
| H.W. CIRCULATING PUMP 2 | | 1H |
| FIXED FILM REACTOR SUPPLY FAN 1 | MCC-A | 2K |
| FIXED FILM REACTOR SUPPLY FAN 2 | | 2M |
| SECONDARY SLUDGE COLLECTOR OPERATOR 1 | MCC-A | 2D |
| SECONDARY SLUDGE COLLECTOR OPERATOR 2 | | 2F |
| △3 H.W. CIRC. PUMP 3 | MCC-B | 1K |
| △3 H.W. CIRC. PUMP 4 | | 1M |

| SELECTOR SWITCH CONTACT DEVELOPMENT | | | | |
|---|---|---|---|---|
| SWITCH POSITION | 1 | | 2 | |
| PUMP | 1 | 2 | 1 | 2 |
| LEAD | X | | | X |
| LAG | | X | X | |

NOTE: 'X' INDICATES SWITCH CONTACT CLOSED.

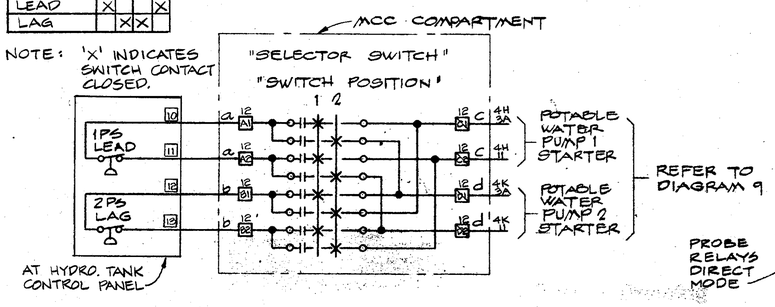


## DIAGRAM 12

"POTABLE WATER PUMP LEAD/LAG CONTROL" MCC-A 5C

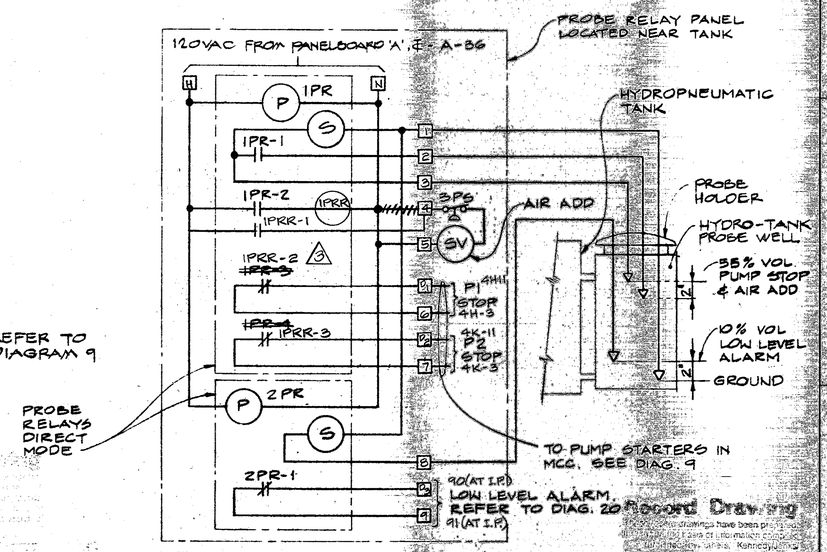


## DIAGRAM 15

HYDROPNEUMATIC TANK CONTROL

Record Drawing
These drawings have been prepared based on information provided by Kennedy/Jenks. Kennedy/Jenks assumes no responsibility for any errors or omissions in these documents and is not liable for any damages arising from the use of these documents.
Date APR 29 1988
AS BUILT DRAWING

| Revised | Description | Submit. | Appr'd. | Date |
|---|---|---|---|---|
| △3 | CLARIFICATION | | | |
| △2 | CO NO. 52 | | | |
| △1 | FIELD TERMINAL NUMBERS ADDED | | | |

Refer to Tracing for Latest Revision

Reference Information and Notes:

1. PROVIDE MEANS FOR LOCKING IN THE 'OFF' POSITION

Designed RDB
Drawn WL
Checked JWS
Date 1/29/81

Wastewater Plant Improvements C-06-2464
Sausalito-Marin City Sanitary District

Kennedy/Jenks Engineers — San Francisco
Submitted: Walter S. Hansman C9370 — Approved: Fred J. Lemm

ELEMENTARY DIAGRAMS 8-15

Scale NONE
Job No. 0112
Sheet E-16 of

99

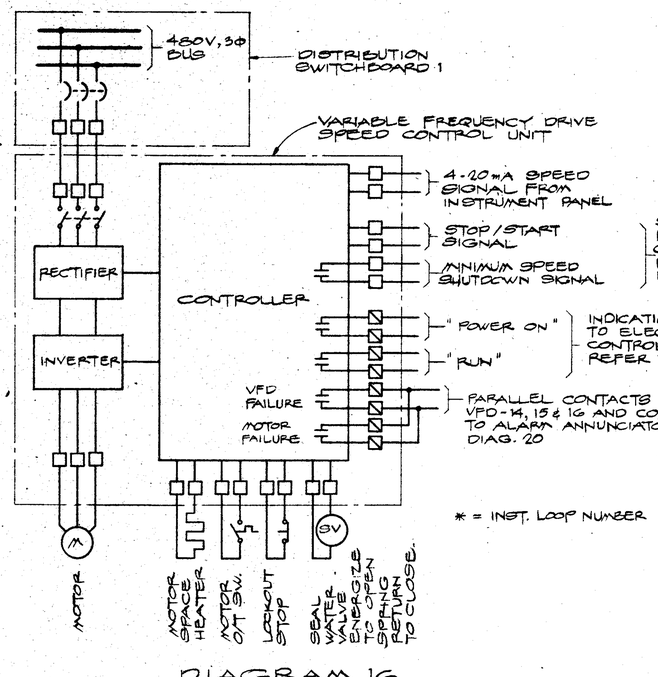


* = INST. LOOP NUMBER

## DIAGRAM 16

| TYPICAL FOR | | INST. LOOP |
|---|---|---|
| REACTOR SUPPLY PUMP 1 | | 14 |
| REACTOR SUPPLY PUMP 2 | | 15 |
| REACTOR SUPPLY PUMP 3 | | 16 |

LIMIT SWITCH REFERENCES

| VALVE NO. | LSO-4 | LSC-4 |
|---|---|---|
| KV-5 | ZSH 105 | ZSL 105 |
| KV-6 | ZSH 106 | ZSL 106 |
| KV-7 | ZSH 107 | ZSL 107 |
| KV-8 | ZSH 108 | ZSL 108 |

LIMIT SWITCH CONTACT DEVELOPMENT

| CONTACT | VALVE POSITION: FULLY OPEN | VALVE POSITION: FULLY CLOSED |
|---|---|---|
| LSC-1 | --- | --- |
| LSO-1 | --- | --- |
| LSC-2 | --- | --- |
| LSO-2 | --- | --- |
| LSC-3 | --- | --- |
| LSO-3 | --- | --- |
| LSC-4 | --- | --- |
| LSO-4 | --- | --- |

NOTE:
CONTROL CIRCUIT SHOWN W/GATE IN THE FULLY CLOSED POSITION.
——CONTACT CLOSED.
- - -CONTACT OPEN.

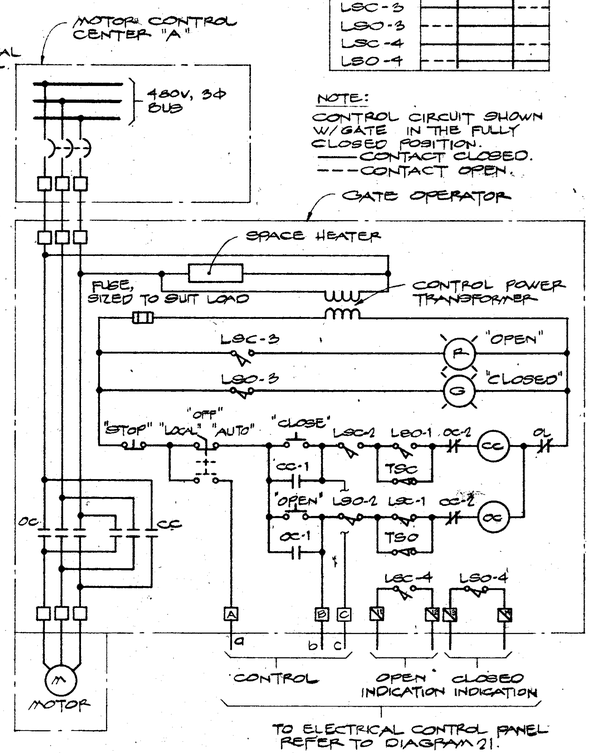


## DIAGRAM 18

KNIFE VALVES KV-5, KV-6, KV-7, KV-8

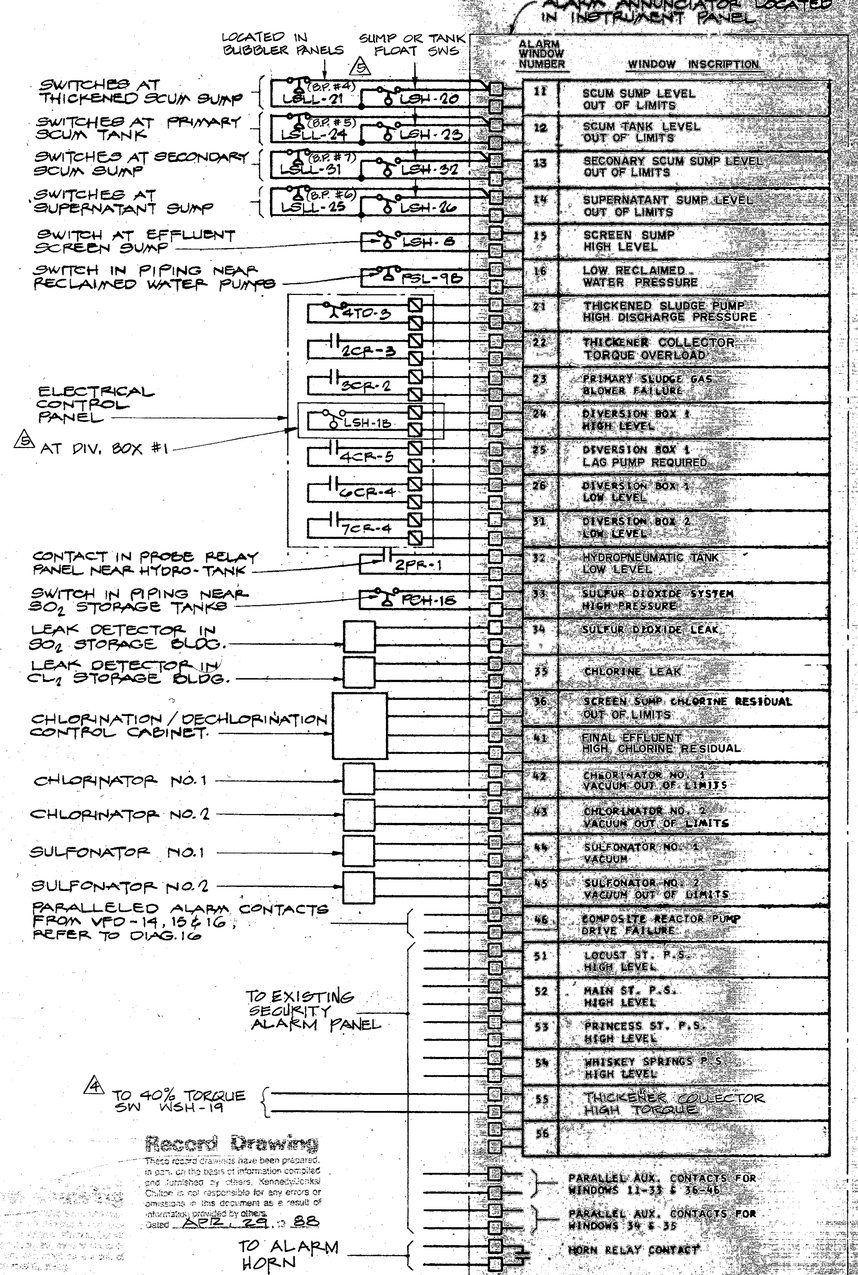


## DIAGRAM 20

ALARM ANNUNCIATOR

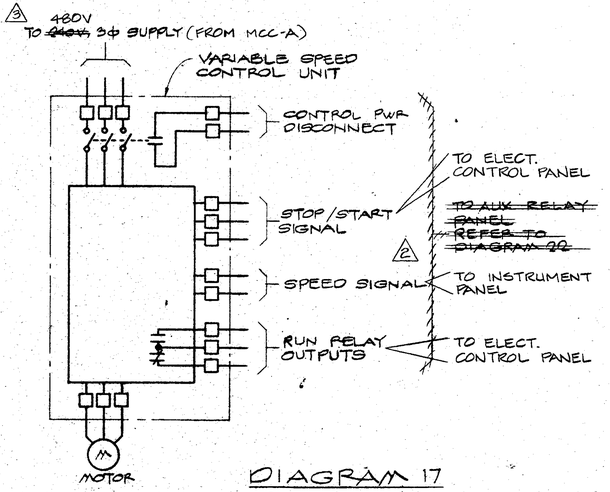


## DIAGRAM 17

TYPICAL FOR: PRIMARY SLUDGE PUMP 1 VS 12A
PRIMARY SLUDGE PUMP 2 VS 12B
SECONDARY SLUDGE PUMP 1 VS 29A
SECONDARY SLUDGE PUMP 2 VS 29B

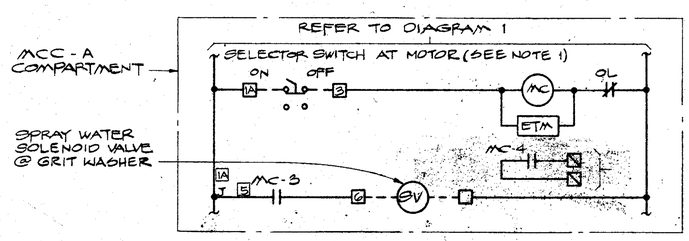


## DIAGRAM 19

GRIT WASHER

MCC-A 4F

Record Drawing
These record drawings have been prepared, in part, on the basis of information compiled and furnished by others. Kennedy/Jenks/Chilton is not responsible for any errors or omissions in this document as a result of information provided by others.
Dated APR. 29, 19 88

RECORD DRAWING

| Revised | Description | Submit. | Appr'd. | Date |
|---|---|---|---|---|
| 5 | CLARIFICATION | | | |
| 4 | CO NO. 56 | | | |
| 3 | CO NO. 25 | | | |
| 2 | FIELD CHANGE | | | |
| 1 | FIELD TERMINAL NOS. ADDED | | | |

Refer to Tracing for Latest Revision

Reference Information and Notes:
1. PROVIDE MEANS FOR LOCKING IN THE "OFF" POSITION

Designed RDS
Drawn WL
Checked JWS
Date 1/29/81

Wastewater Plant Improvements C-08-2484
Sausalito - Marin City Sanitary District
Kennedy/Jenks Engineers San Francisco
Submitted: Walter Hansman G9370 Approved: R. Bert Anna

ELEMENTARY DIAGRAMS 16-20

Scale NONE
Job No. 0112
Sheet E-17
of

100

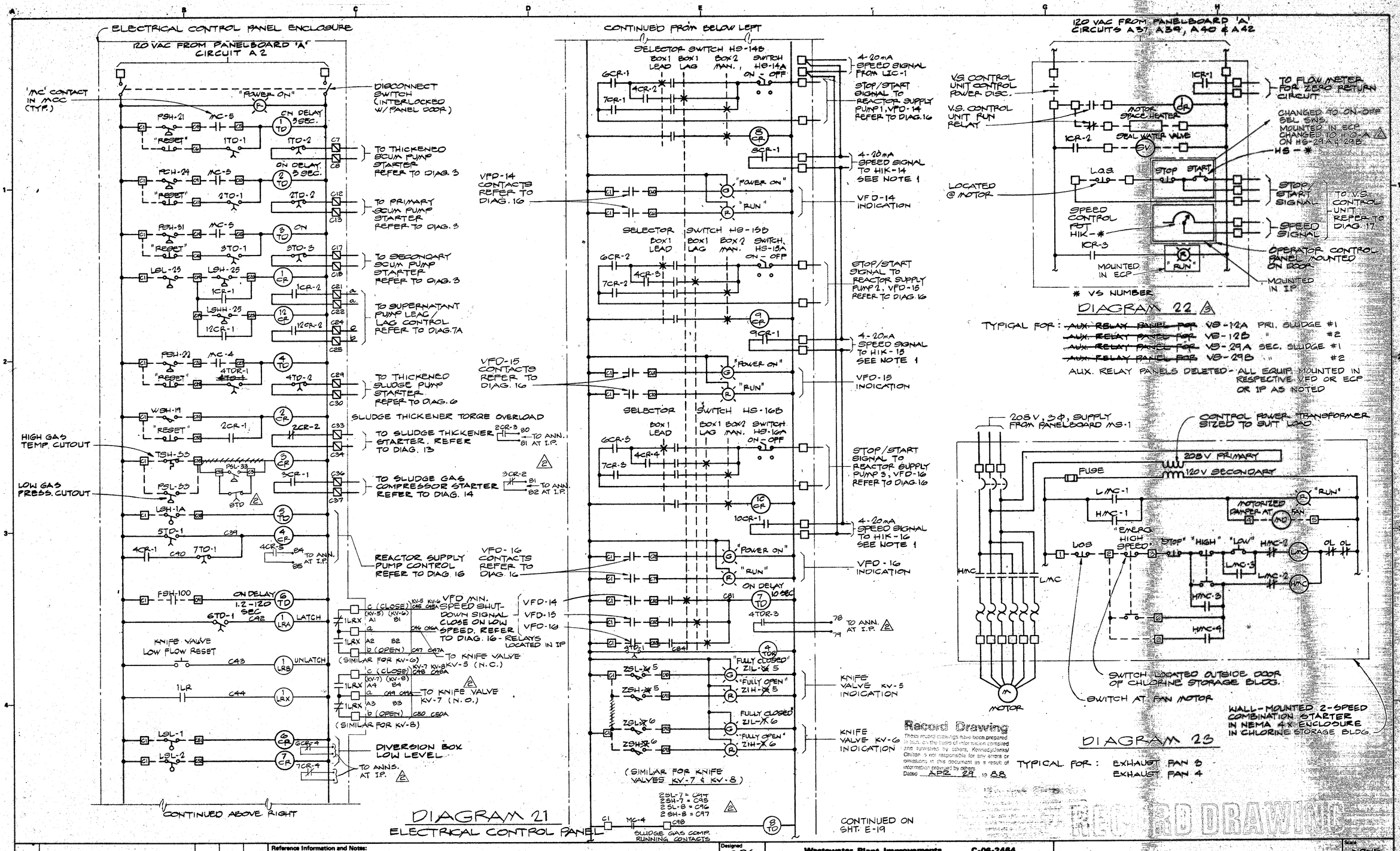


| Revised | Description | Submit. | Appr'd. | Date |
|---|---|---|---|---|
| 3 | FIELD CHANGE | | | |
| 2 | CLARIFICATION | | | |
| 1 | FIELD TERMINAL NOS. ADDED | | | |

Refer to Tracing for Latest Revision

**Reference Information and Notes:**

1. PROVIDE 3 SPECIAL NAMEPLATES AT HS - * B AS FOLLOWS: 'CAUTION: TO OPERATE VFD ON MANUAL, SWITCH HIK - * TO MANUAL AND ADJUST HIK - * TO DESIRED SPEED' * = LOOP NO.

Designed: RDS
Drawn: WL
Checked: JWS
Date: 1/29/81

**Wastewater Plant Improvements** C-06-2464
**Sausalito - Marin City Sanitary District**

Kennedy/Jenks Engineers — San Francisco
Submitted: Walter J. Shauna C9370
Approved: Robert J. Quinn

**ELEMENTARY DIAGRAMS 21-23**

Scale: NONE
Job No. 0112
Sheet E-18 of

101

## PANELBOARD SCHEDULE "DS"

208/120 VOLTS, 3 PHASE, 4 WIRE — 225 AMP BUS — 80 AMP MAIN CIRCUIT BREAKER — MOUNTING: SURFACE

| CKT. NO. | DESCRIPTION | CONNECTED VOLT-AMPS A | B | C | TRIP AMPS/ POLES | CKT. NO. | DESCRIPTION | CONNECTED VOLT-AMPS A | B | C | TRIP AMPS/ POLES |
|---|---|---|---|---|---|---|---|---|---|---|---|
| 1 | LUNCH ROOM REFRIGERATOR | 236 | | | 15/1 | 2 | AIR HANDLING UNIT | 1127 | | | /1 |
| 3 | LUNCH ROOM ELECTRIC RANGE | | 4730 | | 70/2 | 4 | TOILET & SHOWER EXH. FAN | | 162 | | 15/1 |
| 5 | LUNCH ROOM ELECTRIC RANGE | | | 4730 | | 6 | CONTROL RM. EXH. FAN | | | 667 | 15/1 |
| 7 | LAB REFRIGERATOR | 600 | | | 15/1 | 8 | LAB FUME HOOD & EXH. FAN | 910 | | | 15/1 |
| 9 | LAB INCUBATOR | | 600 | | 15/1 | 10 | FEED & ANAL. RM. EXH. FAN | | 230 | | 15/1 |
| 11 | AIR ~~COMPRESSOR~~ DRYER △1 | | | 2250 | ~~35~~ 15/1 | 12 | FEED RM. EMERG. EXH. FAN & DAMPER | | | 850 | 15/1 |
| 13 | OPERATOR WRENCH RECEPTS. △1 | 1320 | | | 25/1 | 14 | EQUIP. RM. EXH. FAN-EAST | 667 | | | 15/1 |
| 15 | ~~SAMPLE PUMP 3~~ SPARE | | 830 | | 15/1 | 16 | EQUIP. RM. EXH. FAN-WEST | | 667 | | 15/1 |
| 17 | ~~SAMPLE PUMP 4~~ △2 | | | 830 | 15/1 | 18 | ~~AIR DRYER~~ ROOF LIGHT △1 | | | 120 | 15/1 |
| 19 | ~~SAMPLE PUMP 5~~ | 830 | | | 15/1 | 20 | ~~SPARE~~ AIR COMPRESSOR | X | | | 15/~~1~~2 |
| 21 | ~~SAMPLE PUMP 6~~ ↓ | | 830 | | 15/1 | 22 | ~~SPARE~~ ↓ | | X | | 15/~~1~~2 |
| 23 | SPARE | | | | 20/1 | 24 | SPACE | | | | 1P |
| 25 | SPACE | | | | 1P | 26 | SPACE | | | | 1P |
| 27 | SPACE | | | | 1P | 28 | SPACE | | | | 1P |
| 29 | SPACE | | | | 1P | 30 | SPACE | | | | 1P |
| SUBTOTALS | | 2986 | 6990 | 7810 | | | | 2704 | 1059 | 1637 | |
| PHASE TOTALS | Ø A: 5690 Ø B: 8049 Ø C: 9447 | | | | | | | | | | |
| TOTAL VOLT-AMPS | 23,186 | | | | | | | | | | |

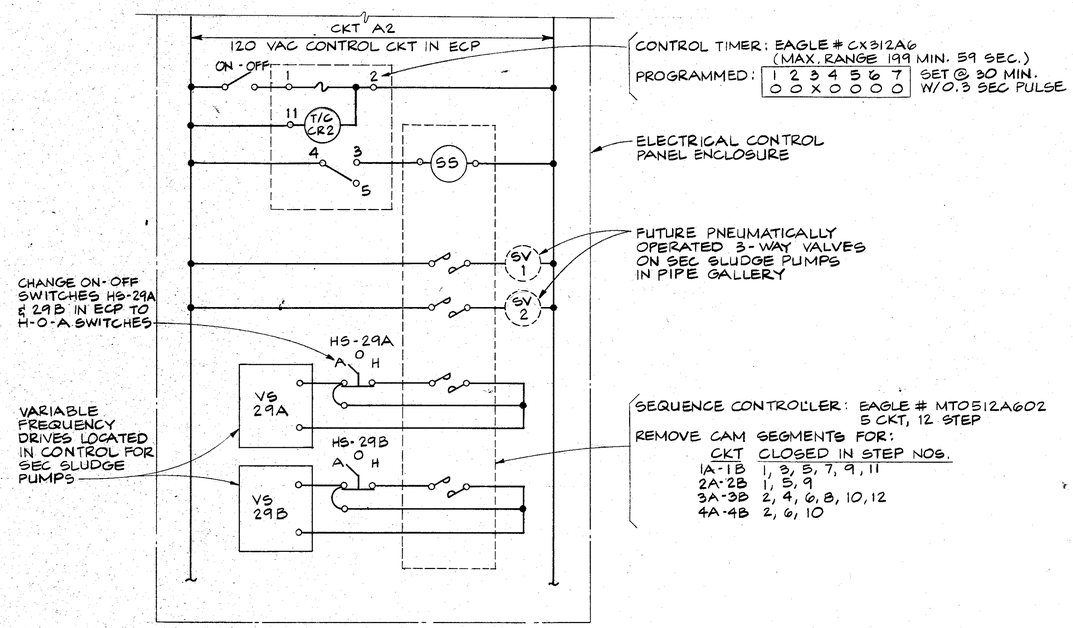


DIAGRAM 21 (CONT.)
SECONDARY SLUDGE PUMP CONTROL △3

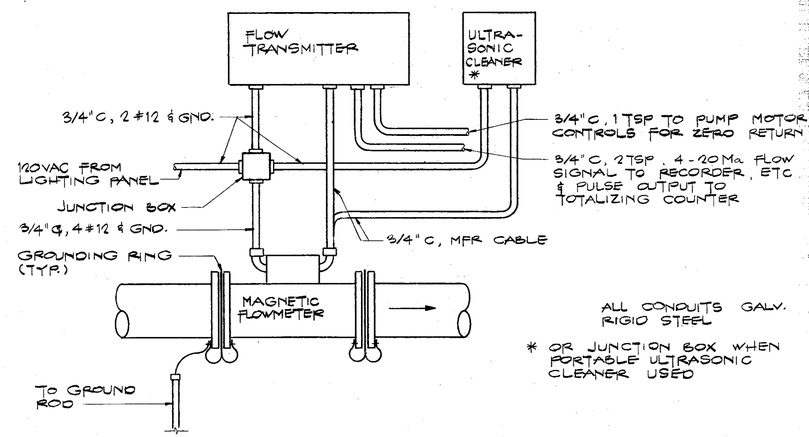


ALL CONDUITS GALV. RIGID STEEL

* OR JUNCTION BOX WHEN PORTABLE ULTRASONIC CLEANER USED

MAGNETIC FLOWMETER CONDUIT & WIRING CONNECTIONS DETAIL 11/19

RECORD DRAWING

| Revised | Description | Submit. | Appr'd. | Date |
|---|---|---|---|---|
| △3 | FIELD CHANGE | | | |
| △2 | CO NO. 57 | | | |
| △1 | CLARIFICATION | | | |

Refer to Tracing for Latest Revision

Reference Information and Notes:

Record Drawing
These record drawings have been prepared, in part, on the basis of information compiled and furnished by others. Kennedy/Jenks/Chilton is not responsible for any errors or omissions in this document as a result of information provided by others.
Dated APR. 29 19 88

Designed JWS
Drawn VD
Checked JWS
Date 1-29-81

Wastewater Plant Improvements C-06-2464
Sausalito-Marin City Sanitary District
Kennedy/Jenks Engineers San Francisco
Submitted: Walter J. Hassmann
Approved: Robert J. Cenar

SCHEDULE & DETAILS

Scale: NONE
Job No. 0112
Sheet E-19 of

102

## INSTRUMENT LEGEND

| FIRST LETTER | | | SUCCEEDING LETTERS | |
|---|---|---|---|---|
| | INITIATING VARIABLE | MODIFIER | OUTPUT FUNCTIONS | MODIFIER |
| A | ANALYSIS | | ALARM | |
| B | | | | |
| C | CONDUCTIVITY | | CONTROL | |
| D | | DIFFERENTIAL | | |
| E | POTENTIAL (VOLTS) | | PRIMARY ELEMENT | |
| F | FLOW RATE | RATIO | | |
| G | | | | |
| H | HAND (MANUALLY) | | | HIGH |
| I | | | INDICATE | |
| J | POWER | | | |
| K | TIME/TIME SCHEDULE | | CONTROL STATION | |
| L | LEVEL | | LIGHT (PIOLT) | LOW |
| M | | | | |
| N | STATUS | | | |
| O | | | | |
| P | PRESSURE | | | |
| Q | QUANTITY | INTEGRATE/ TOTAL | | |
| R | | | RECORD/PRINT/RECEIVE | |
| S | SPEED/FREQUENCY | | SWITCH | |
| T | TEMPERATURE | | TRANSMIT | |
| U | | | | |
| V | | | VALVE | |
| W | WEIGHT/FORCE/TORQUE | | | |
| X | TELEMETRY | | ISOLATE | |
| Y | SIGNAL | | RELAY/COMPUTE | |
| Z | POSITION | | DRIVE/ACTUATE | |

## INSTRUMENT TAG NUMBERS

F IT 123 A

- A — SUFFIX USED ONLY WHEN TWO OR MORE INSTRUMENTS WOULD OTHERWISE HAVE THE SAME TAG NUMBER.
- 123 — LOOP NUMBER
- IT — SUCCEEDING LETTERS } FUNCTIONAL IDENTIFICATION (SEE INSTRUMENT LEGEND).
- F — MEASURED OR INITIATING VARIABLE

## SYMBOLS FOR INSTRUMENTS

| GRAPHIC SYMBOL | DESCRIPTION |
|---|---|
| | INSTRUMENT (SCHEMATIC DIAGRAMS) |
| | INSTRUMENT MOUNTED IN PROCESS FLOW LINE |
| 12A | INSTRUMENT MOUNTED ON FACE OF PANEL 12A |
| 12A | INSTRUMENT MOUNTED BEHIND PANEL 12A |
| | MULTI-FUNCTION INSTRUMENT |

## FUNCTION DESIGNATION FOR HARDWIRED RELAYS AND CONTROLLERS

| SYMBOL | FUNCTION |
|---|---|
| Σ | ADD OR TOTALIZE (ADD AND SUBTRACT) |
| Δ | SUBTRACT |
| ±, +, − | BIAS |
| AVG | AVERAGE |
| × | MULTIPLY |
| ÷ | DIVIDE |
| √ | EXTRACT SQUARE ROOT |
| $X^n$ $X^{\frac{1}{n}}$ | RAISE TO POWER |
| f(x) | CHARACTERIZE |
| \|:\| | BOOST AND ISOLATE |
| > | HIGHEST VALUE SELECTION |
| < | LOWEST VALUE SELECTION |
| REV | REVERSE |
| E/P, P/I (TYPICAL) | FOR INPUT/OUTPUT CONVERTERS USING THE FOLLOWING SIGNALS: E VOLTS, H HYDRAULIC, I CURRENT, P PNEUMATIC, R RESISTANCE, A ANALOG, D DIGITAL |
| P | PROPORTIONAL CONTROL ACTION |
| I | INTEGRAL CONTROL ACTION |
| I-O | ON/OFF CONTROL ACTION |
| Δ I-O | ON/OFF CONTROL ACTION WITH DIFFERENTIAL GAP |
| T/H | TRACK AND HOLD |

## SYMBOLS FOR PRIMARY SENSING ELEMENTS

| SYMBOL | DESCRIPTION |
|---|---|
| | VENTURI TUBE OR FLOW NOZZLE |
| | FLUME |
| | WEIR |
| | TURBINE OR PROPELLER-TYPE |
| | ORIFICE PLATE |
| FE | |
| FT | UNCLASSIFIED PRIMARY FLOW ELEMENT WITH INTEGRAL TRANSMITTER (e.g. MAGNETIC TARGET OR MASS FLOW METERS). |

## INSTRUMENT LINE SYMBOLS

| SYMBOL | DESCRIPTION |
|---|---|
| | PROCESS FLOW LINE |
| | PNEUMATIC SIGNAL |
| | ELECTRICAL SIGNAL (ANALOG) |
| | ELECTRICAL SIGNAL (DISCRETE) |
| | HYDRAULIC SIGNAL |
| | CONNECTOR |
| | MECHANICAL CONNECTION OR LINKAGE |
| AS | AIR SUPPLY |
| ES | ELECTRICAL SUPPLY (120 VAC) |
| ES 24 | ELECTRICAL SUPPLY (24 VDC) |
| | LINES CROSSING (NO CONNECTION) |
| | LINES JOINING |
| | DIRECTION OF FLOW |

## SYMBOLS FOR CONTROL VALVE ACTUATORS

| SYMBOL | DESCRIPTION |
|---|---|
| | DIAPHRAGM, SPRING-OPERATED |
| | CYLINDER, SINGLE-ACTING |
| | CYLINDER, DOUBLE-ACTING |
| | HAND ACTUATOR |
| E/H | ELECTRO-HYDRAULIC ACTUATOR |
| S | SOLENOID |
| M | MOTOR |

## MISCELLANEOUS DEVICES

| SYMBOL | DESCRIPTION |
|---|---|
| VS | VARIABLE SPEED PUMP |
| P | PURGE DEVICE |
| | RUPTURE DISC FOR PRESSURE RELIEF |
| | THERMOMETER WELL |
| | SPECIAL RECEPTACLE |

## FUNCTION DESIGNATION AND ABBREVIATIONS

| | |
|---|---|
| PCP | PROCESS CONTROL PANEL |
| MCC | MOTOR CONTROL CENTER |
| MCP | MAIN CONTROL PANEL |
| CP | CONTROL PANEL |
| CS | CONTROL STATION |
| SP | SET POINT |
| GP | GRAPHIC PANEL |
| ECP | ELECTRICAL CONTROL PANEL |
| | GENERALIZED SYMBOL FOR INTERLOCK LOGIC PROVIDED BY ELECTRICAL. NUMBER IS AN ELEMENTARY DIAGRAM NUMBER SHOWN ON THE ELECTRICAL DRAWINGS. |
| ARP | AUX. RELAY PANEL |
| IP | INSTRUMENT PANEL |
| AA | ALARM ANNUNCIATOR |
| HOA | HAND-OFF-AUTO |

## NOTES

FOR SPECIFIC INSTRUMENT DESIGNATIONS, REFER TO GENERAL INSTRUMENT SCHEDULE IN SPECIFICATION SECTION 17000.

FOR INSTRUMENT TYPES AND CALIBRATION, REFER TO INDIVIDUAL INSTRUMENT SCHEDULES AT REAR OF SPECIFIC INSTRUMENT SPECIFICATION SECTION.

Record Drawing
These record drawings have been prepared, in part, on the basis of information compiled and furnished by others. Kennedy/Jenks/Chilton is not responsible for any errors or omissions in this document as a result of information provided by others.
Dated Apr. 29 19 88

RECORD DRAWING

| Revised | Description | Submit. | Appr'd. | Date |
|---|---|---|---|---|
| Refer to Tracing for Latest Revision | | | | |

Reference Information and Notes:
FOR CONTROL VALVE SYMBOLS SEE MECHANICAL DRAWINGS

Record Drawing
These record drawings have been prepared, in part, on the basis of information compiled and furnished by others. Kennedy/Jenks/Chilton is not responsible for any errors or omissions in this document as a result of information provided by others.
Dated Apr. 29 19 88

Designed JCN
Drawn PG
Checked JWS
Date 1/20/81

Wastewater Plant Improvements C-06-2464
Sausalito - Marin City Sanitary District
Kennedy/Jenks Engineers San Francisco
Submitted: Walter F. Grussman C9370
Approved: R. Paul Quigley

INSTRUMENT
SYMBOLS AND IDENTIFICATION

Scale NONE
Job No. 01112
Sheet I-1 of

109

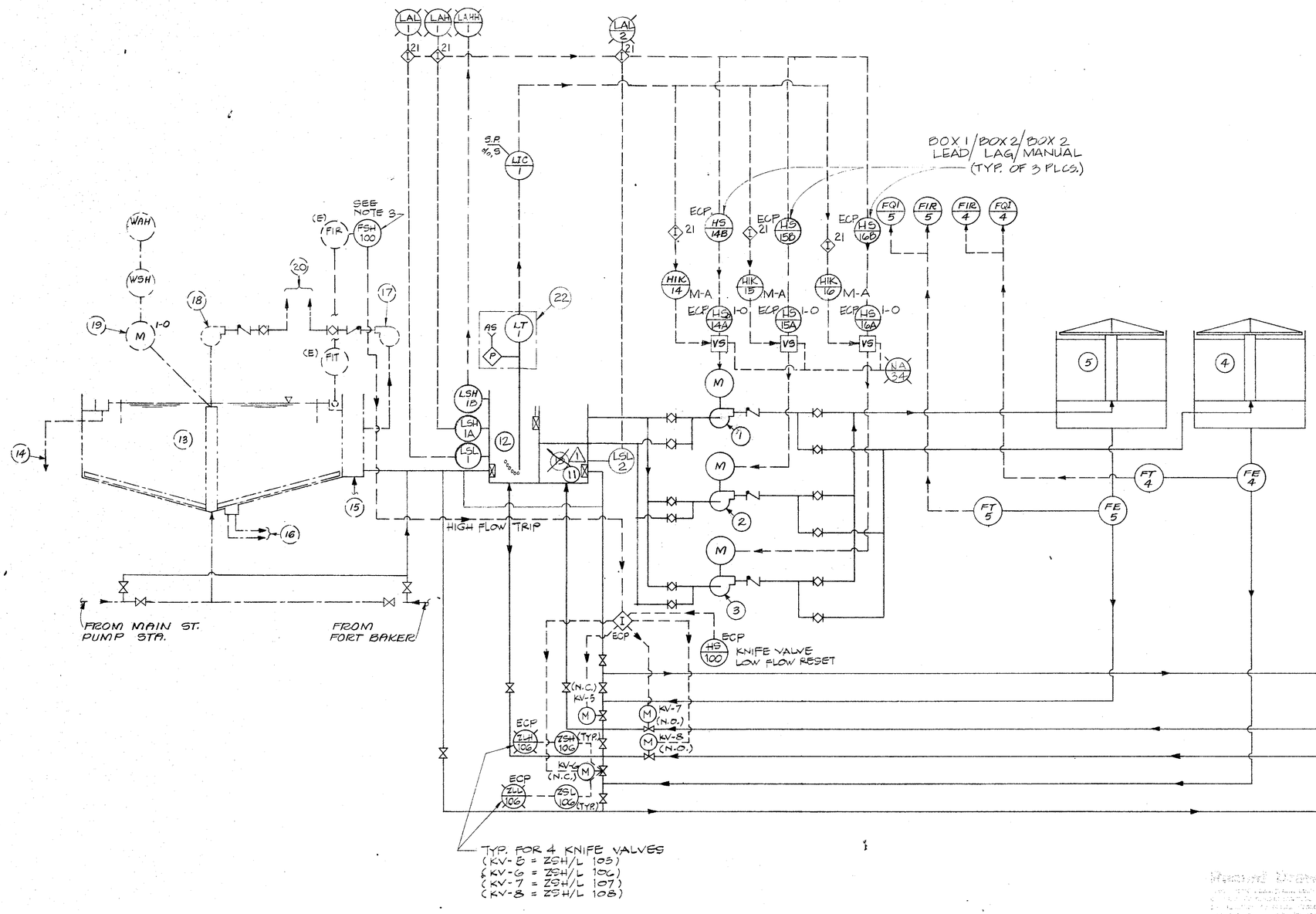


(1) REACTOR SUPPLY PUMP NO. 1
(2) REACTOR SUPPLY PUMP NO. 2
(3) REACTOR SUPPLY PUMP NO. 3
(4) FIXED FILM REACTOR NO. 1
(5) FIXED FILM REACTOR NO. 2
(6) SECONDARY SEDIMENTATION TANK NO. 1
(7) SECONDARY SEDIMENTATION TANK NO. 1
(8) SECONDARY SLUDGE, SEE SHEET I-3
(9) SECONDARY EFFLUENT, SEE SHEET I-3
(10) SCUM, SEE SHEET I-3
(11) DIVERSION BOX NO. 1
(12) DIVERSION BOX NO. 2
(13) PRIMARY SEDIMENTATION TANK
(14) TO SCUM TANK, SEE SHEET I-4
(15) FROM SUPERNATANT PUMPS, SEE SHEET I-4
(16) TO SLUDGE PUMPS, SEE SHEET I-4
(17) PRIMARY EFFLUENT SAMPLE PUMP (EXIST.)
(18) INFLUENT SAMPLE PUMP (EXIST.)
(19) COLLECTOR DRIVE
(20) TO EXISTING SAMPLING SYSTEM
(21) SLUICE GATE NO. 3 OPERATOR
(22) BUBBLER PANEL 1 (SEE NOTE 2)
(23) COLLECTOR DRIVE 1
(24) COLLECTOR DRIVE 2

Reproducible Drawing
APR 29 1988

| Revised | Description | Submit. | Appr'd. | Date |
|---|---|---|---|---|
| 1 | CLARIFICATION | | | |

Refer to Tracing for Latest Revision

Reference Information and Notes:
1. LOCATE PANEL MOUNTED INSTRUMENTS IN THE INSTRUMENT PANEL UNLESS OTHERWISE NOTED.
2. SEE SHEET I-6 FOR BUBBLER PANEL DETAILS.
3. ADD (N) CAM & MICROSWITCH TO (E) BIF CHRONOFLO RECORDER TO CLOSE ON RISING FLOW (ADJUSTABLE OVER FULL RECORDER SPAN). SET @ 3.6 MGD INITIALLY.

Designed RDS/JN
Drawn AM
Checked JWS
Date 1/29/81

**Wastewater Plant Improvements** **C-06-2464**
**Sausalito - Marin City Sanitary District**

**Kennedy/Jenks Engineers** **San Francisco**
Submitted: Walter E. Hansman
Approved: Robert J. Orme

PROCESS & INSTRUMENTATION DIAGRAM I

Scale NONE
Job No. 0112
Sheet I-2 of

104

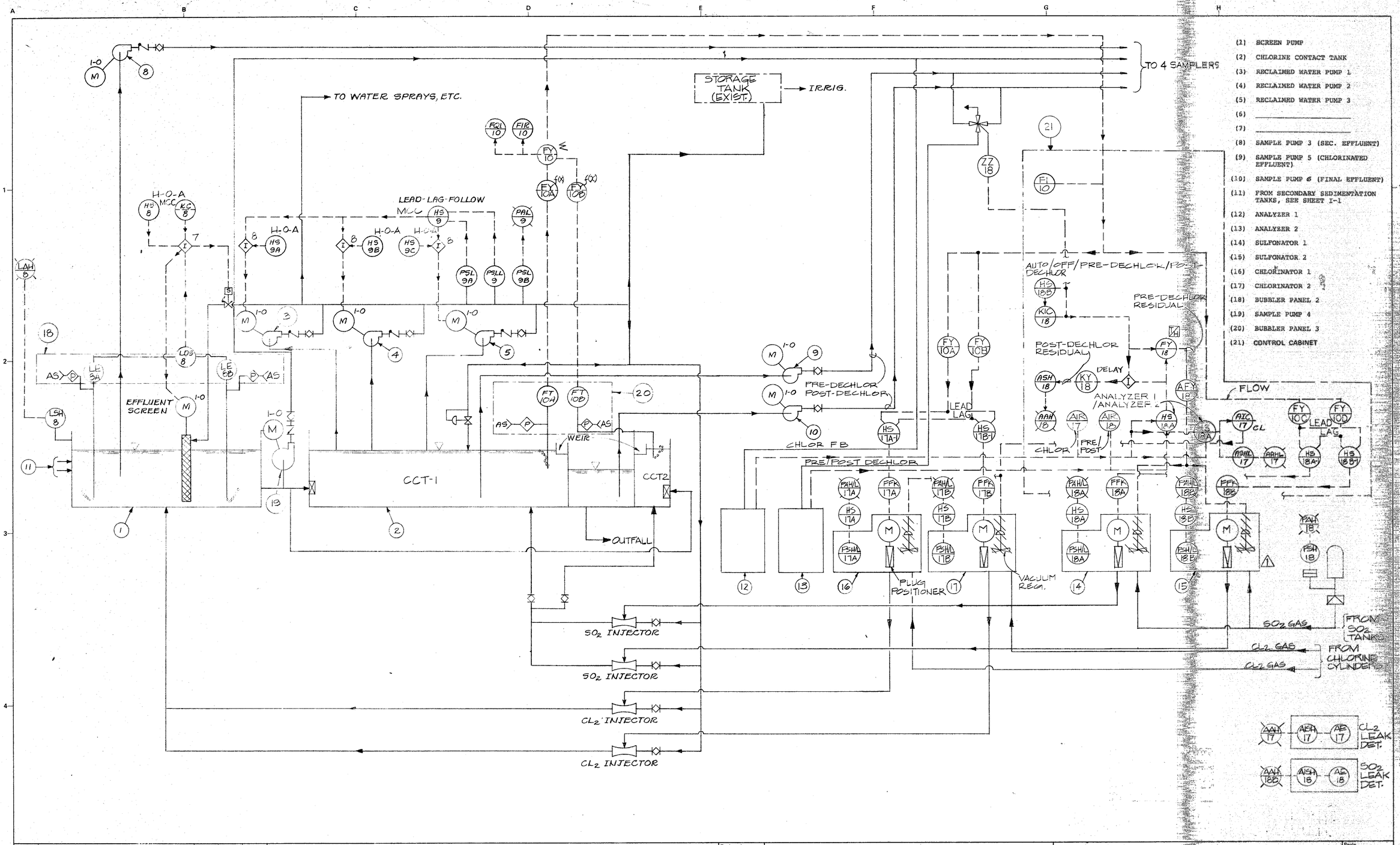


(1) SCREEN PUMP
(2) CHLORINE CONTACT TANK
(3) RECLAIMED WATER PUMP 1
(4) RECLAIMED WATER PUMP 2
(5) RECLAIMED WATER PUMP 3
(6) _____
(7) _____
(8) SAMPLE PUMP 3 (SEC. EFFLUENT)
(9) SAMPLE PUMP 5 (CHLORINATED EFFLUENT)
(10) SAMPLE PUMP 6 (FINAL EFFLUENT)
(11) FROM SECONDARY SEDIMENTATION TANKS, SEE SHEET I-1
(12) ANALYZER 1
(13) ANALYZER 2
(14) SULFONATOR 1
(15) SULFONATOR 2
(16) CHLORINATOR 1
(17) CHLORINATOR 2
(18) BUBBLER PANEL 2
(19) SAMPLE PUMP 4
(20) BUBBLER PANEL 3
(21) CONTROL CABINET

| Revised | Description | Submit. | Appr'd. | Date |
|---|---|---|---|---|
| | | | | |

Refer to Tracing for Latest Revision

Reference Information and Notes:

Record Drawing
These record drawings are being furnished in one (1) set of reproducibles and furnished by others. KennedyJenks Children is not responsible for any errors or omissions in this document as a result of information provided by others.
Date APR. 29 1988

Designed RDS/JN
Drawn AM
Checked JWS
Date 1/29/81

**Wastewater Plant Improvements C-06-2464**
**Sausalito - Marin City Sanitary District**

**Kennedy/Jenks Engineers** **San Francisco**

Submitted: Walter Hansmann D9570
Approved: Robert J. Chen

PROCESS & INSTRUMENTATION DIAGRAM 2

Scale NONE
Job No. 0112
Sheet I-3 of

105

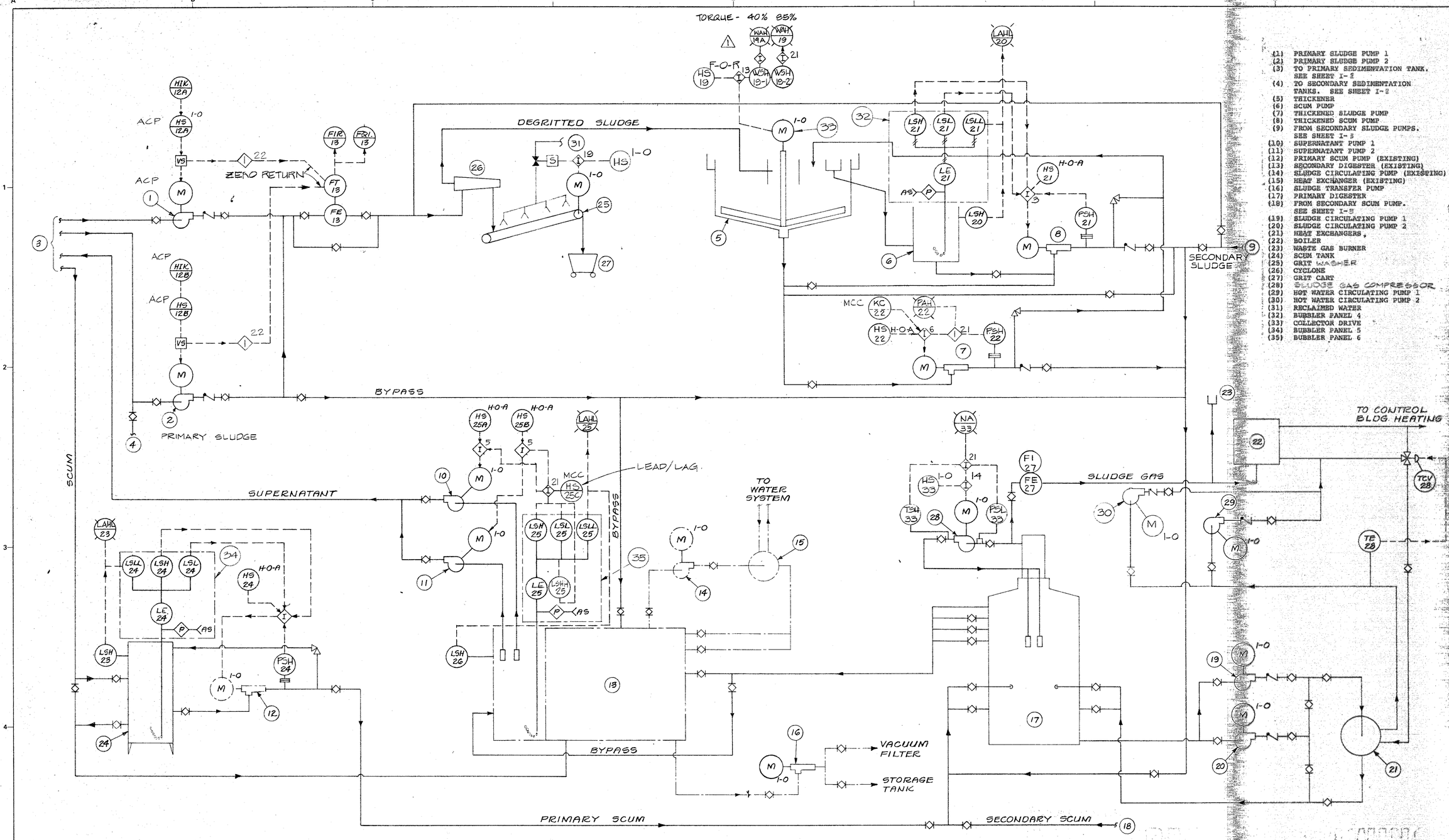


(1) PRIMARY SLUDGE PUMP 1
(2) PRIMARY SLUDGE PUMP 2
(3) TO PRIMARY SEDIMENTATION TANK. SEE SHEET I-2
(4) TO SECONDARY SEDIMENTATION TANKS. SEE SHEET I-2
(5) THICKENER
(6) SCUM PUMP
(7) THICKENED SLUDGE PUMP
(8) THICKENED SCUM PUMP
(9) FROM SECONDARY SLUDGE PUMPS. SEE SHEET I-3
(10) SUPERNATANT PUMP 1
(11) SUPERNATANT PUMP 2
(12) PRIMARY SCUM PUMP (EXISTING)
(13) SECONDARY DIGESTER (EXISTING)
(14) SLUDGE CIRCULATING PUMP (EXISTING)
(15) HEAT EXCHANGER (EXISTING)
(16) SLUDGE TRANSFER PUMP
(17) PRIMARY DIGESTER
(18) FROM SECONDARY SCUM PUMP. SEE SHEET I-3
(19) SLUDGE CIRCULATING PUMP 1
(20) SLUDGE CIRCULATING PUMP 2
(21) HEAT EXCHANGERS
(22) BOILER
(23) WASTE GAS BURNER
(24) SCUM TANK
(25) GRIT WASHER
(26) CYCLONE
(27) GRIT CART
(28) SLUDGE GAS COMPRESSOR
(29) HOT WATER CIRCULATING PUMP 1
(30) HOT WATER CIRCULATING PUMP 2
(31) RECLAIMED WATER
(32) BUBBLER PANEL 4
(33) COLLECTOR DRIVE
(34) BUBBLER PANEL 5
(35) BUBBLER PANEL 6

| Revised | Description | Submit. | Appr'd. | Date |
|---|---|---|---|---|
| 1 | CO NO. 56 | | | |

Refer to Tracing for Latest Revision

Reference Information and Notes:

**Record Drawing**
These record drawings have been prepared, in part, on the basis of information compiled and furnished by others. Kennedy/Jenks/Chilton is not responsible for any errors or omissions in this document as a result of information provided by others.
Dated APR. 29, 19 88

Designed RDS/JN
Drawn AM
Checked JWS
Date 1 29 81

**Wastewater Plant Improvements C-06-2464**
**Sausalito - Marin City Sanitary District**

Kennedy/Jenks Engineers — San Francisco
Submitted: Walter H. Gammon CS370
Approved: Robert J. Amen

PROCESS & INSTRUMENTATION DIAGRAM 3

Scale NONE
Job No. 0112
Sheet I-4 of

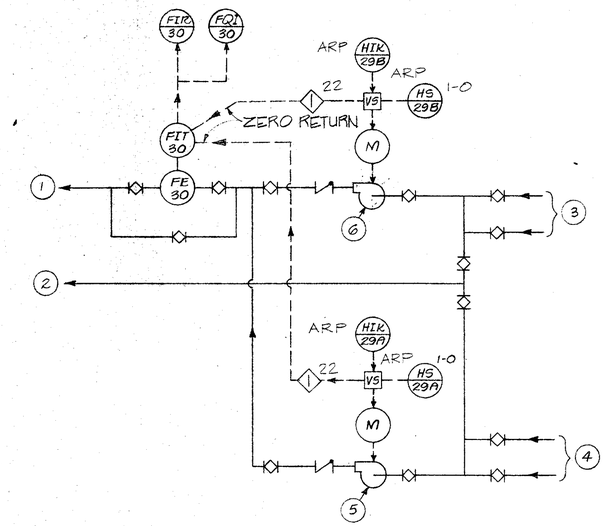


SECONDARY SLUDGE SYSTEM

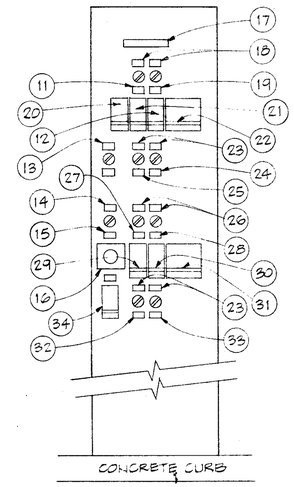


CHLORINATION/DECHLORINATION CONTROL PANEL FRONT ELEVATION

SCALE: NONE

(1) TO CYCLONE, SEE SHEET I-4
(2) TO PRIMARY SLUDGE PUMP 2, SEE SHEET I-4
(3) TO SECONDARY SEDIMENTATION TANK 2, SEE SHEET I-2
(4) TO SECONDARY SEDIMENTATION TANK 1, SEE SHEET I-2
(5) SECONDARY SLUDGE PUMP 1
(6) SECONDARY SLUDGE PUMP 2
(7) SECONDARY SCUM PUMP
(8) SECONDARY SCUM SUMP
(9) TO PRIMARY DIGESTER, SEE SHEET I-4
(10) BUBBLER PANEL 7
(11) CHLORINATOR 1
✳ (12) CHLORINE RESIDUAL CONTROLLER AIC 17
(13) ANALYZER 1 – ANALYZER 2
(14) AUTO–OFF PRE-DECHLORINATION POST-DECHLORINATION
(15) DECHLORINATION CONTROL SELECTOR
(16) DECHLORINATION REPEAT CYCLE TIMER KIC 18
(17) CHLORINATION/DECHLORINATION CONTROL PANEL
(18) LEAD-LAG
(19) CHLORINATOR 2
(20) CHLORINATOR 1 DOSAGE
(21) CHLORINATOR 2 DOSAGE
(22) PRE-DECHLORINATION CHLORINE RESIDUAL RECORDER AIR 17
(23) OFF—ON
(24) CHLORINATOR 2 ABNORMAL VACUUM ALARM BYPASS
(25) CHLORINATOR 1 ABNORMAL VACUUM ALARM BYPASS
(26) LEAD-LAG
(27) SULFORATOR 1
(28) SULFORATOR 2
(29) SULFORATOR 1 DOSAGE
(30) SULFORATOR 2 DOSAGE
(31) PRE/POST DECHLORINATION CHLORINE
(32) SULFORATOR 1 ABNORMAL VACUUM ALARM BYPASS
(33) SULFORATOR 2 ABNORMAL VACUUM ALARM BYPASS
(34) SULFONATOR CONTROL RATIO ADJUST APY-13

✳ CONTROLLER MODULE REMOVED IN FIELD. TERMINAL CAN REMAINS. △1

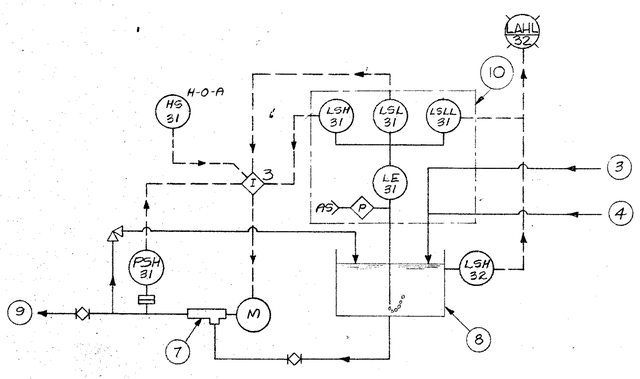


SECONDARY SCUM SYSTEM

| Revised | Description | Submit. | Appr'd. | Date |
|---|---|---|---|---|
| △1 | FIELD CHANGE | | | |

Refer to Tracing for Latest Revision

Reference Information and Notes:

**Record Drawing**
These record drawings have been prepared, in part, on the basis of information compiled and furnished by others. Kennedy/Jenks/Chilton is not responsible for any errors or omissions in this document as a result of information provided by others.
Dated APR 27, 10 85

Designed RDS/JN
Drawn AM
Checked JWS
Date 1/29/81

Wastewater Plant Improvements C-06-2464
Sausalito - Marin City Sanitary District

Kennedy/Jenks Engineers — San Francisco

Submitted: Walter F. Hansman C9370
Approved: Robert J. Ames

PROCESS & INSTRUMENTATION DIAGRAM 4

Scale NONE
Job No. 0112
Sheet I-5 of

107

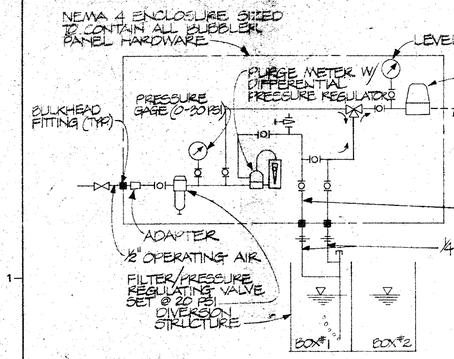


BUBBLER PANEL NO. 1

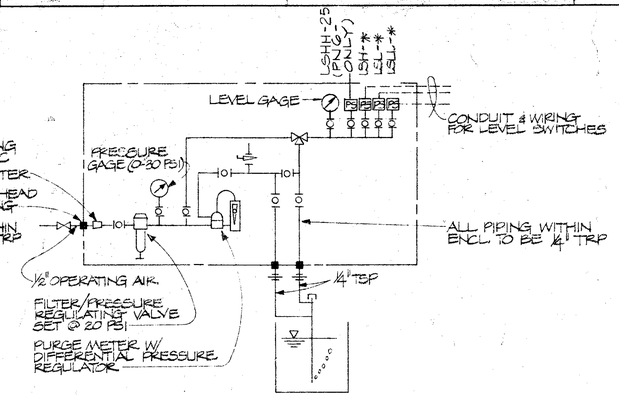


TYPICAL FOR BUBBLER PANELS 4,5,6,& 7

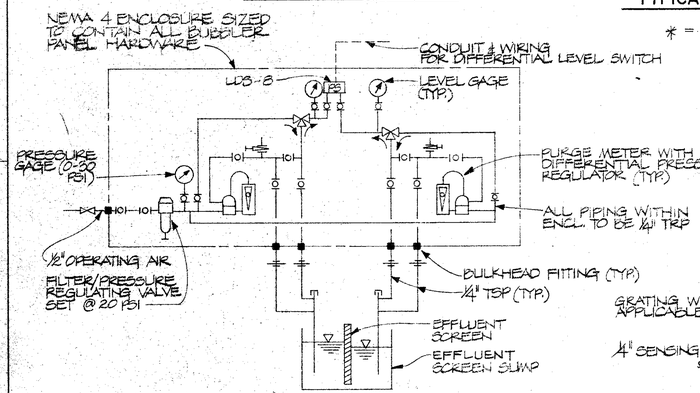


BUBBLER PANEL NO. 2

* = INST LOOP NUMBER

| | | |
|---|---|---|
| 21 | FOR BUBBLER PNL. | 4 |
| 24 | " " " | 5 |
| 25 | " " " | 6 |
| 31 | " " " | 7 |

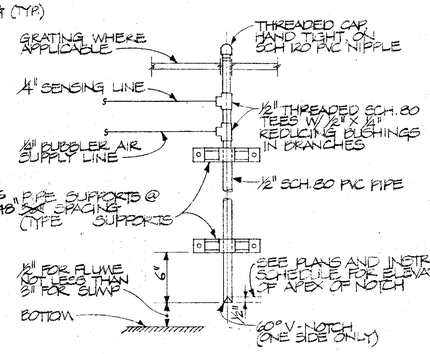


BUBBLER DETAIL

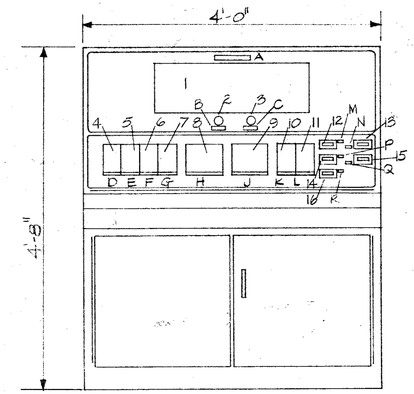


FRONT ELEVATION

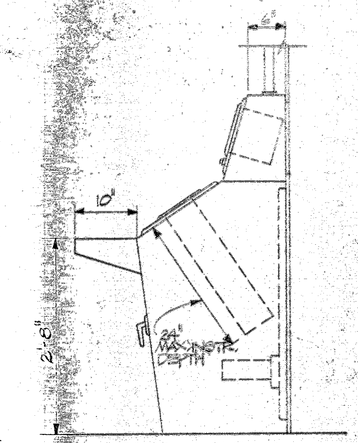


SIDE ELEVATION

DEVICE SCHEDULE

1. ANNUNCIATOR PANEL
2. RESET PUSHBUTTON
3. ALARM ACKNOWLEDGE PUSHBUTTON
4. LIC 1
5. FIK 4
6. FIK 5
7. FIK 16
8. FIR 4/FIR5
9. FIK 13
10. FI 13
11. FI 30
12. FQI 4
13. FQI 5
14. FQI 10
15. FQI 15
16. FQI 30

NAMEPLATE SCHEDULE

A. "INSTRUMENT PANEL"
B. "ALARM RESET"
C. "ALARM ACKNOWLEDGE"
D. "DIVERSION BOX LEVEL CONTROLLER"
E. "REACTOR SUPPLY PUMP NO.1 MANUAL LOADING STATION"
F. "REACTOR SUPPLY PUMP NO.2 MANUAL LOADING STATION"
G. "REACTOR SUPPLY PUMP NO.3 MANUAL LOADING STATION"
H. "PEN NO.1 = FIXED FILM REACTOR NO.1 FLOW PEN NO.2 = FIXED FILM REACTOR NO.2 FLOW"
J. "PLANT OUTFLOW"
K. "PRIMARY SLUDGE FLOW"
L. "SECONDARY SLUDGE FLOW"
M. "FFR NO.1 TOTAL FLOW x 1000 GAL."
N. "FFR NO.2 TOTAL FLOW x 1000 GAL."
P. "OUTFLOW TOTAL x 1000 GAL."
Q. "PRIMARY SLUDGE FLOW x 100 GAL."
R. "SECONDARY SLUDGE FLOW x 100 GAL."

INSTRUMENT PANEL

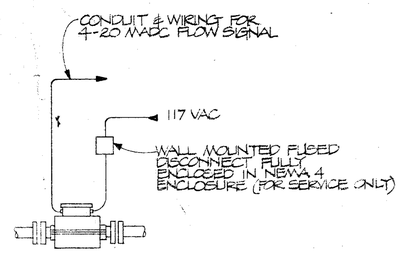


MAGNETIC FLOWMETER INSTALLATION DETAIL

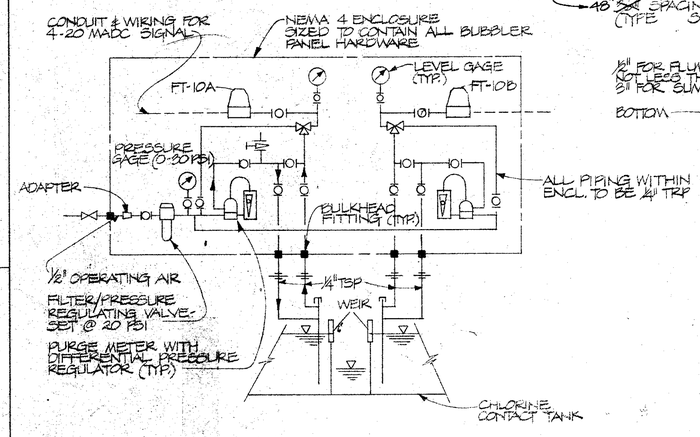


BUBBLER PANEL NO. 3

| Revised | Description | Submit. | Appr'd. | Date |
|---|---|---|---|---|
| | | | | |

Refer to Tracing for Latest Revision

Reference Information and Notes:

**Record Drawing**
These record drawings have been prepared, in part, on the basis of information compiled and furnished by others. Kennedy/Jenks/Chilton is not responsible for any errors or omissions in the document as a result of information provided by others.
Dated APR. 29, 1982

Designed RDS/JN
Drawn AYS
Checked JWS
Date 1/29/81

**Wastewater Plant Improvements C-06-2464**
**Sausalito - Marin City Sanitary District**

Kennedy/Jenks Engineers San Francisco
Submitted: Walter L. Harman C 9370
Approved: Robert J. Anna

PANEL LAYOUT & DETAILS

Scale NONE
Job No. 0112
Sheet I-6 of

BID DRAWING