SAUSALITO · MARIN CITY SANITARY DISTRICT

WASTEWATER PLANT IMPROVEMENTS

C-06-2464

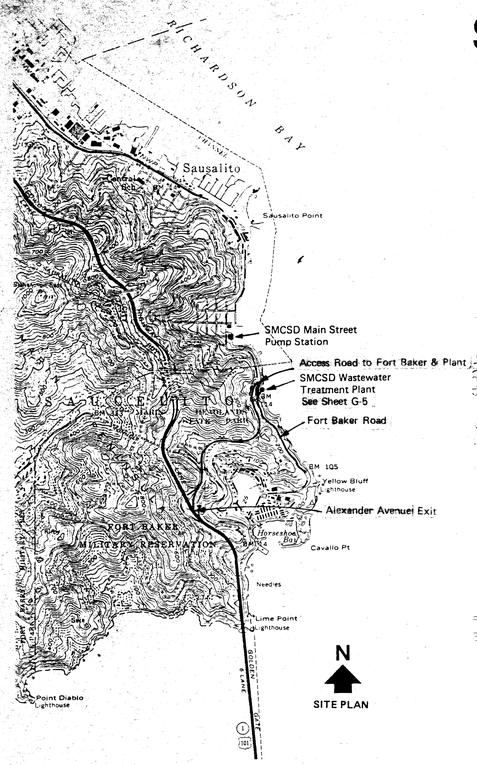

SITE PLAN

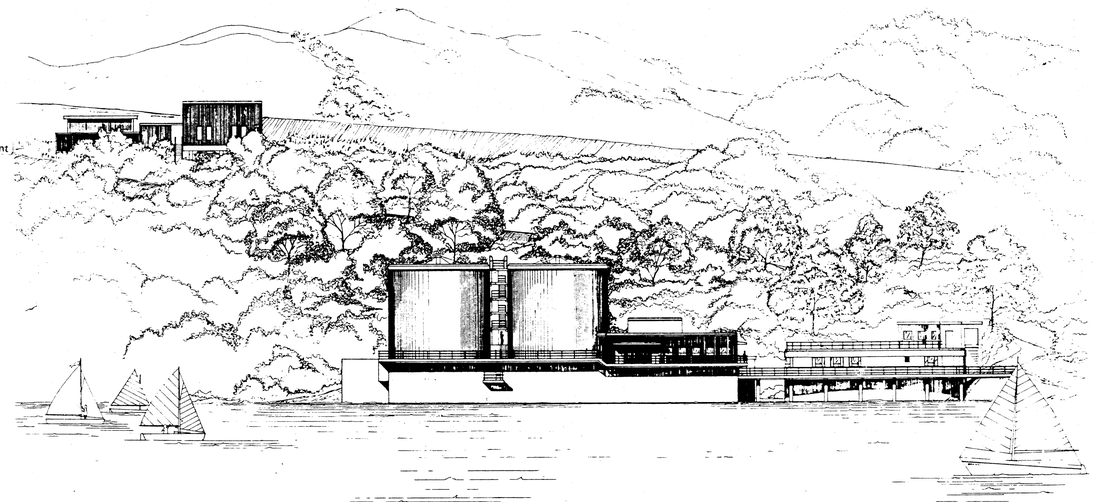

INDEX OF DRAWINGS

G–1	VICINITY MAP AND LIST OF DRAWINGS
G–2	NOTES, SYMBOLS AND ABREVIATIONS
G–3	PROCESS FLOW DIAGRAM
G–4	HYDRAULIC PROFILE AND DESIGN CRITERIA
G–5	PLANT SITE
G–6	MAJOR OUTSIDE PIPING AND ACCESS CAUSEWAY
G–7	OUTFALL
G–8	MAIN STREET PUMP STATION MODIFICATIONS
G–9	SOILS BORINGS
~~G–6A~~	~~ACCESS CAUSEWAY MODIFICATIONS~~
M–1	OUTSIDE PIPING
M–2	SECONDARY STRUCTURE TOP PLAN
M–3	SECONDARY STRUCTURE INTERMEDIATE PLAN
M–4	SECONDARY STRUCTURE BOTTOM PLAN
M–5	SECONDARY STRUCTURE LONGITUDIAL SECTION
M–6	PIPE GALLERY SECTIONS
M–7	PIPE GALLERY SECTIONS
M–8	PIPE GALLERY SLUDGE PUMPS AND PIPING
M–9	EFFLUENT SCREEN PLAN AND SECTIONS
M–10	CHLORINE CONTACT STRUCTURE PLAN & SECTIONS
M–11	CHLORINE CONTACT STRUCTURE SECTIONS
M–12	CHLORINE CONTACT STRUCTURE SECTIONS
M–13	CONTROL BUILDING PLAN
M–14	CONTROL BUILDING PLUMBING AND DRAINAGE
M–15	CONTROL BUILDING HEATING AND VENTILATING
M–16	THICKENER AND PRIMARY DIGESTER TOP PLAN
M–17	THICKENER AND PRIMARY DIGESTER BOTTOM PLAN
M–18	THICKENER AND PRIMARY DIGESTER SECTIONS
M–19	THICKENER AND PRIMARY DIGESTER SECTIONS
M–20	BOILER ROOM PLAN AND SECTIONS
M–21	PRIMARY STRUCTURE MODIFICATIONS
M–22	PRIMARY STRUCTURE MODIFICATIONS
M–23	PRIMARY STRUCTURE MODIFICATIONS & DELETIONS
M–24	PRIMARY STRUCTURE MODIFICATIONS & DELETIONS
M–25	CHLORINATION/DECHLORINATION SCHEMATIC DIAGRAM
M–26	CHLORINE AND SULFUR DIOXIDE STORAGE AREA PLAN
M–27	CHLORINE AND SULFUR DIOXIDE STORAGE SECTIONS AND DETAILS
M–28	WATER SYSTEM – SCHEMATIC
M–29	PIPE SUPPORTS AND MISCELLANEOUS DETAILS
M–30	PIPING AND MISCELLANEOUS DETAILS
M–31	PIPING AND MISCELLANEOUS DETAILS
M–32	MISCELLANEOUS DETAILS
M–33	FIXED FILM REACTORS AIR SYSTEM DETAILS
M–34	ENGINE GENERATOR ROOM
M–35	FUEL OIL TANK AND P.W. HYDROPNUEMATIC SYSTEM
M–36	SLUDGE GAS PLANS, SECTIONS & DETAILS
A–1	CONTROL BUILDING PLAN
A–2	CONTROL BUILDING ELEVATIONS
A–3	CONTROL BUILDING INTERIOR ELEVATIONS
A–4	CONTROL BUILDING SECTIONS
A–5	CHLORINE STORAGE AREA PLAN
A–6	CHLORINE STORAGE BUILDING ELEVATIONS
A–7	SECONDARY STRUCTURE NORTH ELEVATION
A–8	SECONDARY STRUCTURE EAST ELEVATION
A–9	SECONDARY STRUCTURE WEST ELEVATION
A–10	SCHEDULES
A–11	DETAILS
A–12	DETAILS
A–13	DETAILS
A–14	LADDERS – STAIRS – RAILINGS
S–1	GENERAL STRUCTURAL NOTES AND TYPICAL STRUCTURAL DETAILS
S–2	TYPICAL STRUCTURAL DETAILS
S–3	SECONDARY STRUCTURE BASE PLAN
S–4	SECONDARY ST CTURE PLAN AT EL. 120.17
S–5	SECONDARY STRUCTURE PARTIAL PLANS AT EL. 113.0 AND EL. 128.0
S–6	SECONDARY STRUCTURE FIXED FILM REACTORS PARTIAL PLAN, SECTION, DETAILS & BEAM SCHEDULE
S–7	SECONDARY STRUCTURE SECTIONS
S–8	SECONDARY STRUCTURE SECTIONS
S–9	SECONDARY STRUCTURE SECTIONS
S–10	SECONDARY STRUCTURE SECTIONS
S–11	SECONDARY STRUCTURE SECTIONS
S–12	SECONDARY STRUCTURE SECTIONS
S–13	SECONDARY STRUCTURE SECTIONS
S–14	SECONDARY STRUCTURE SECTIONS DETAILS AND BEAM SCHEDULE
S–15	PRIMARY D GESTER PLANS AND SECTION
S–16	PRIMARY DIGESTER SECTIONS AND DETAILS
S–17	THICKENER PLANS
S–18	THICKENER SECTIONS AND BEAM SCHEDULE
S–19	CHLORINE STORAGE BUILDING AND SAFETY EQUIPMENT BUILDING FOUNDATION AND GRADE FLOOR PLANS – BEAM SCHEDULE
S–20	CHLORINE STORAGE BUILDING AND SAFETY EQUIPMENT BUILDING ROOF PLANS – SECTIONS
S–21	CHLORINE STORAGE BUILDING AND SAFETY EQUIPMENT BUILDING SECTIONS
S–22	ACCESS PLATFORM AND GENERATOR BUILDING FOUNDATION PLAN – DETAIL
S–23	ACCESS PLATFORM AND GENERATOR BUILDING TOP PLANS
S–24	ACCESS PLATFORM AND GENERATOR BUILDING SECTIONS, DETAILS AND SCHEDULES
E–1	ABBREVIATIONS, LEGEND AND NOTES
E–2	ELECTRICAL SITE PLAN
E–3	SINGLE LINE DIAGRAM 1
E–4	SINGLE LINE DIAGRAM 2
E–5	LIGHTING PLANS 1
E–6	LIGHTING PLANS 2
E–7	LIGHTING PLANS 3
E–8	LIGHTING AND POWER PLAN
E–9	POWER PLANS
E–10	POWER PLANS
E–11	POWER PLANS
E–12	POWER PLANS
E–13	SCHEDULES
E–14	ELEVATIONS AND DETAILS
E–15	ELEMENTARY DIAGRAMS 1–7
E–16	ELEMENTARY DIAGRAMS 8 – 15
E–17	ELEMENTARY DIAGRAMS 16 –
E–18	ELEMENTARY DIAGRAMS
E–19	SCHEDULE
I–1	INSTRUMENT SYMBOLS AND IDENTIFICATION
I–2	PROCESS AND INSTRUMENTATION DIAGRAM 1
I–3	PROCESS AND INSTRUMENTATION DIAGRAM 2
I–4	PROCESS AND INSTRUMENTATION DIAGRAM 3
I–5	PROCESS AND INSTRUMENTATION DIAGRAM 4
I–6	PANEL LAYOUTS AND DETAILS

Record Drawing
This drawing is based on information furnished by others and may not reflect all conditions as constructed. Omissions or inaccuracies in the information furnished by others may affect the accuracy of this drawing.
Dated 4-29-88

Record Drawing
Revised per Change Order No. 3
Dated 4-29-88
Approved by [illegible]

Revision	Description	Submit.	Appr'd.	Date
2	C.O. NO 35			
1	C.O. NO 3			

Refer to Trigger for Latest Revision

Reference Information and Notes:

Designed: JHF
Drawn: RAE
Checked: JHF
Date: 1-29-81

Wastewater Plant Improvements C-06-2464
Sausalito - Marin City Sanitary District

Kennedy Jenks Engineers San Francisco

Submitted: Approved:

VICINITY MAP AND LIST OF DRAWINGS

Scale: NONE
Job No.: 0112
Sheet: G-1
of

ABBREVIATIONS

A.C.	ASBESTOS CEMENT, ASPHALTIC CONCRETE
A.C.I.	AMERICAN CONCRETE INSTITUTE
ADDIT.	ADDITIONAL
ADJ.	ADJACENT
AL.-ALUM.	ALUMINUM
ANCH.	ANCHOR
APPROX.	APPROXIMATE
ARCH. ARCHIT'L	ARCHITECTURAL
AUTO	AUTOMATIC
B.C.	BOLT CIRCLE
B.H.S.M.C.	BUTTON HEAD SHEET METAL SCREW
BLD'G.	BUILDING
B.M.	BEAM, BENCH MARK
BOT., BOTT., BTM.	BOTTOM
C.C., C/C	CENTER TO CENTER
CFH	CUBIC FEET PER HOUR
CFM	CUBIC FEET PER MINUTE
CHK'D.	CHECKERED
CHLOR.	CHLORINE
C.I.	CAST IRON
CK PL	CHECKERED PLATE
CLR.	CLEAR, CLEARANCE
COL.	COLUMN
CONC.	CONCRETE
CONST.	CONSTRUCTION
CONT.	CONTINUOUS, CONTINUATION
CPLG.	COUPLING
CTRSK.	COUNTERSUNK
CW	COLD WATER
DBLE.	DOUBLE
DET.	DETAIL
D.F.	DOUGLAS FIR
DIA.	DIAMETER
DISCH.	DISCHARGE
DN.	DOWN
DR.	DOOR, DRAIN
DWG.	DRAWING
EA.	EACH
EF.	EACH FACE
EFFL.	EFFLUENT
EL.	ELEVATION
ELECT.	ELECTRICAL
ENCL.	ENCLOSURE
E.P.	EDGE OF PAVEMENT
EQ.	EQUAL
EQUIP.	EQUIPMENT
E.W.	EACH WAY
EXIST.	EXISTING
EXP., EXPAN.	EXPANSION
EXT.	EXTERIOR, EXTENSION
FCA	FLANGED COUPLING ADAPTER
FCO	FLOOR CLEANOUT
FD	FLOOR DRAIN
FFR	FIXED FILM REACTOR
FH	FLAT HEAD
FHMS	FLAT HEAD MACHINE SCREW
FHPS	FLAT HEAD PHILLIPS SCREW
FHSMS	FLAT HEAD SHEET METAL SCREW
FIN.	FINISHED
FL.	FLOOR
FLD. CK.	FIELD CHECK
FLEX.	FLEXIBLE
FLG.	FLANGE
FOR	FUEL OIL RETURN
FOS	FUEL OIL SUPPLY
GA.	GAUGE
GA., GALV.	GALVANIZED
GAL.	GALLONS
GPM	GALLONS PER MINUTE
GR.	GRADE, GROUND
G.V.	GATE VALVE
H., HT.	HEIGHT
H.B.	HOSE BIBB
HEX.	HEXAGONAL
H.M.	HOLLOW METAL
HORIZ., HOR.	HORIZONTAL
HP.	HORSEPOWER
HPSG	HIGH PRESSURE SLUDGE GAS
HTG.	HEATING
HWR	HOT WATER RETURN
HWS	HOT WATER SUPPLY
I.D.	INSIDE DIAMETER
I.E.	INVERT ELEVATION
IF	INSIDE FACE
IN.	INCH
INSUL., INSUL'T'N.	INSULATION
INV.	INVERT
JT.	JOINT
L	LENGTH OF CURVE
L.W.	LOW WATER
MACH.	MACHINE
MAT'L.	MATERIAL
MAX.	MAXIMUM
M.B.	MACHINE BOLT
M.C.C.	MOTOR CONTROL CENTER
MECH.	MECHANICAL
MED.	MEDIUM
MFR., MANUF.	MANUFACTURER
M.H.	MANHOLE
MIN.	MINIMUM
MISC.	MISCELLANEOUS
MTG.	MOUNTING
N.I.C.	NOT IN CONTRACT
NO.	NUMBER
NOM.	NOMINAL
N.T.S.	NOT TO SCALE
O.C.	ON CENTERS
O.D.	OUTSIDE DIAMETER
OF.	OUTSIDE FACE
OPER.	OPERATOR
OPNG., OPN'G.	OPENING
OPP.	OPPOSITE
O.S.F.W.	OUTSIDE FACE OF WALL
P.	PIPE
PH	PHASE
PL	PLATE
PREF.	PREFORMED
PRESS.	PRESSURE
PROJ.	PROJECTION
P.R.V.	PRESSURE REDUCING VALVE
P.S.I.	POUNDS PER SQUARE INCH
PT	POINT
PVMT.	PAVEMENT
R.	RADIUS, RISER
RAD.	RADIUS
R.D.	ROOF DRAIN
RED.	REDUCER
REF	REFERENCE
REG.	REGISTER
REINF.	REINFORCING
REQ'D	REQUIRED
RHWS	ROUND HEAD WOOD SCREW
RM	ROOM
R.O.	ROUGH OPENING
RPM	REVOLUTIONS PER MINUTE
RT	RIGHT
R.V.	RELIEF VALVE
RWD	REDWOOD
RWL	RAIN WATER LEADER
SAN.	SANITARY
SCH., SCHED.	SCHEDULE
S.E.	SOUTHEAST
SEC.	SECONDARY
SED.	SEDIMENTATION
SG	SLUDGE GAS
SHT.	SHEET
SIM.	SIMILAR
S.P.	STATIC PRESSURE
SPEC., SPECIF.	SPECIFICATION
SP, SP'S	SPACE OR SPACES
SQ	SQUARE
S.S.	STAINLESS STEEL
STA.	STATION
ST.	STEEL
STRUCT.	STRUCTURAL
SUPP., S.	SUPPORT
SW	SEAL WATER
SXT	SOCKETS X THREAD
T	TOP, TREAD TYPE
T&B	TOP AND BOTTOM
T/	TOP
TKS	TYPE K SUPPORT
THK., TK.	THICK
TM-2P	TYPE M-2 PIPE - SEE PIPE SCHEDULE
TYP.	TYPICAL
VD	VOLUME DAMPER
VERT.	VERTICAL
W.	WIDTH
W/	WITH
WR	WALL REGISTER

℄	CENTERLINE
Δ	CENTRAL ANGLE
ϕ	DIAMETER
&	AND
@	AT
#	LB(S)

(1) REFER TO THE NOTE WITH THIS NUMBER

REFERENCE SYMBOLS

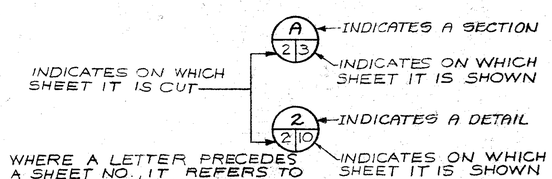

GENERAL SYMBOLS

DESCRIPTION	SINGLE LINE	DOUBLE LINE
JOINTS		
FLANGED		
JOINT AS DESCRIBED IN PERTINENT PIPE SPECIFICATION		
VALVES		
GATE		
GLOBE		
PLUG		
SWING OR BALL CHECK		
SPECIAL VALVES (INCLUDES SOLENOID VALVE)		
BALL		
NEEDLE VALVE		
BUTTERFLY (FLANGED)		
RELIEF VALVE		
THREE-WAY VALVE		
FITTINGS		
ELBOW - STRAIGHT		
ELBOW - REDUCING		
REDUCER (CONCENTRIC SHOWN)		
TEE		
CROSS		
STRAINER		
UNION		
FLEXIBLE COUPLING		
FLANGED COUPLING ADAPTER		
VICTAULIC COUPLING		
EXISTING PIPING ETC.		

OTHER

CONCRETE IN SECTION		HANDRAIL OR GUARDRAIL	
STEEL IN SECTION		WATER SURFACE	
WOOD IN SECTION		STRUCTURAL STEEL ANGLE	L
GRATING		STRUCTURAL STEEL CHANNEL	C4 x 5.4
CHECKERED PLATE		EXISTING FENCE	—x—x—
GRAVELED AREA		NEW FENCE	—x—x—
FINISHED GRADE	TTETETT	EXISTING STRUCTURE OR PIPE (HIDDEN LINES)	
CENTERLINE		PROPERTY LINE	
EXISTING CONTOUR	——109——		
FINISHED GRADE CONTOUR	——109——		
SOILS BORING WITH IDENTIFICATION NO.	5		

Record Drawing
RECORD DRAWING

Revised	Description	Submit.	Appr'd.	Date
Refer to Tracing for Latest Revision				

Reference Information and Notes:

Record Drawing
These record drawings have been prepared, in part, on the basis of information compiled and furnished by others. Kennedy/Jenks/Chilton is not responsible for any errors or omissions in this information as a result of information provided by others.
Date: 4-29 19 88

Designed J.A.F.
Drawn A.M.
Checked JHF
Date 1-29-81

Wastewater Plant Improvements C-06-2464
Sausalito - Marin City Sanitary District
Kennedy/Jenks Engineers San Francisco
Submitted: C 9370 Approved:

NOTES, SYMBOLS AND ABREVIATIONS

Scale NONE
Job No. 0112
Sheet G-2
of

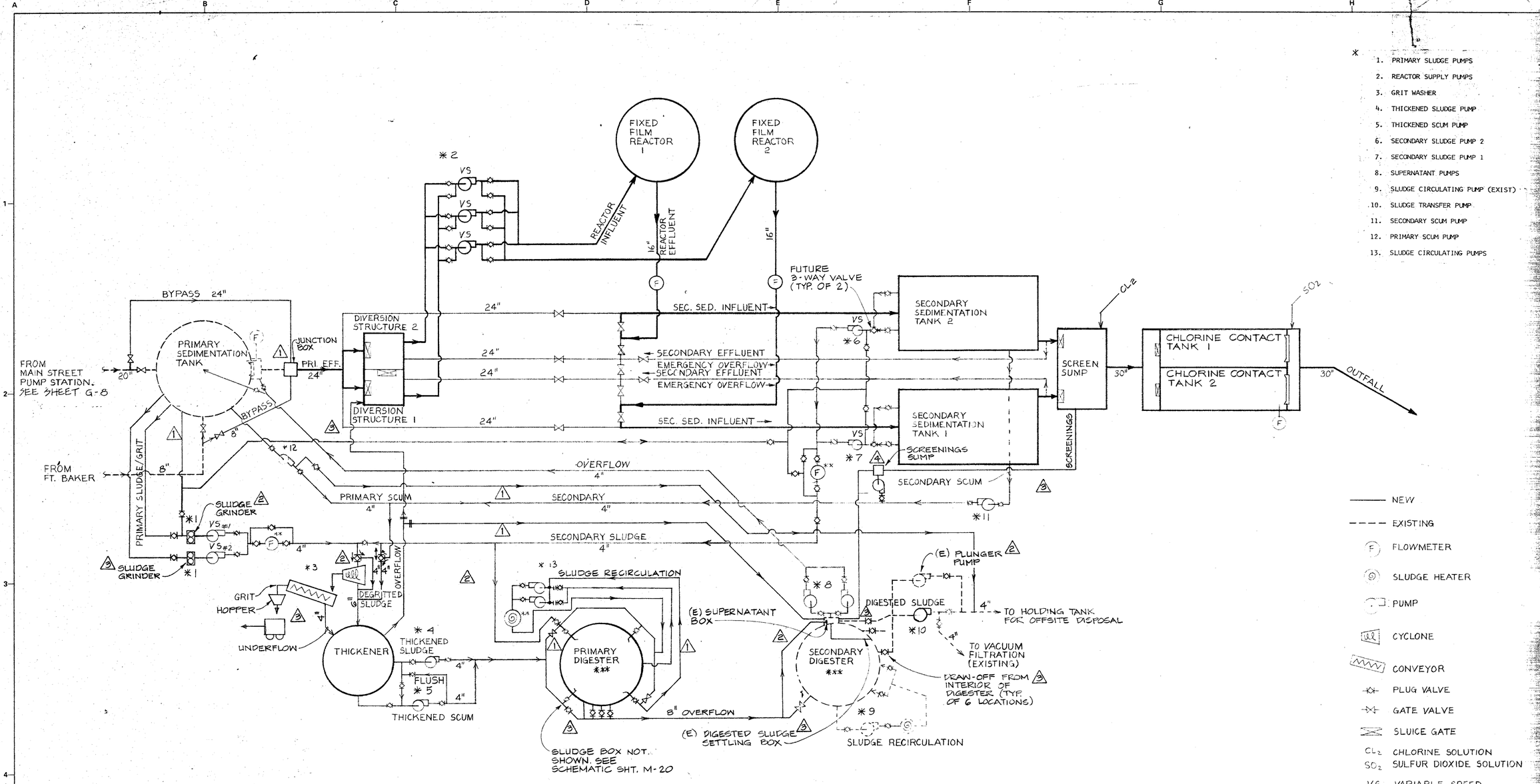

* EQUIPMENT

1. PRIMARY SLUDGE PUMPS
2. REACTOR SUPPLY PUMPS
3. GRIT WASHER
4. THICKENED SLUDGE PUMP
5. THICKENED SCUM PUMP
6. SECONDARY SLUDGE PUMP 2
7. SECONDARY SLUDGE PUMP 1
8. SUPERNATANT PUMPS
9. SLUDGE CIRCULATING PUMP (EXIST)
10. SLUDGE TRANSFER PUMP
11. SECONDARY SCUM PUMP
12. PRIMARY SCUM PUMP
13. SLUDGE CIRCULATING PUMPS

Revised	Description	Submit.	Appr'd.	Date
4	CO NO. 24			
3	CLARIFICATION			
2	CO NO. 45			
1	FIELD CHANGE			

Refer to Tracing for Latest Revision

Reference Information and Notes:

Designed JHF
Drawn JHF
Checked JHF
Date 1-29-81

Wastewater Plant Improvements C-06-2464
Sausalito - Marin City Sanitary District

Kennedy/Jenks Engineers — San Francisco

Submitted: Walter Hamman 2-27-81 — Approved: Robert J. Avery

PROCESS FLOW DIAGRAM

Scale NONE
Job No. 0112
Sheet G-3 of

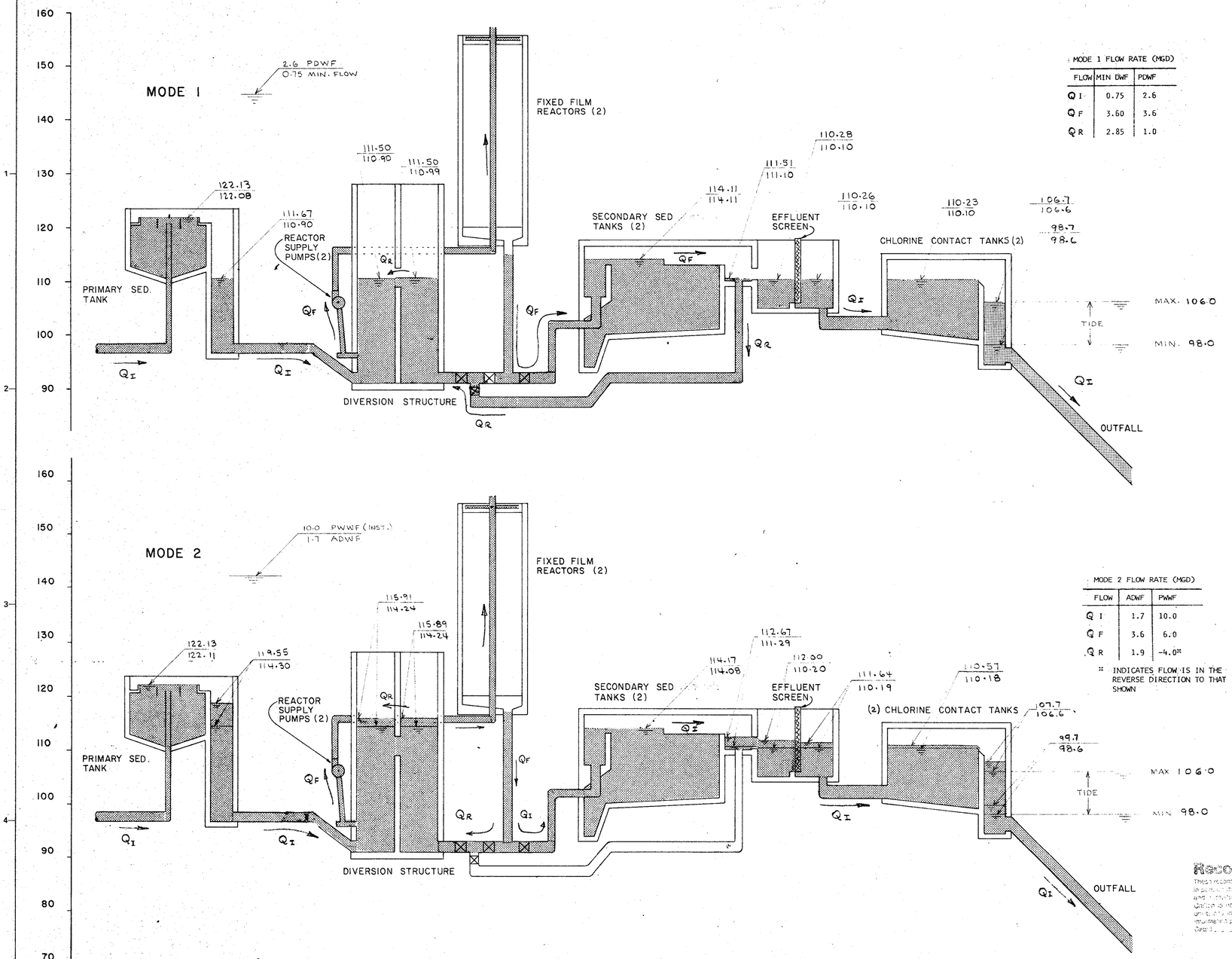

MODE 1 FLOW RATE (MGD)

FLOW	MIN DWF	PDWF
Q_I	0.75	2.6
Q_F	3.60	3.6
Q_R	2.85	1.0

MODE 2 FLOW RATE (MGD)

FLOW	ADWF	PWWF
Q_I	1.7	10.0
Q_F	3.6	6.0
Q_R	1.9	-4.0*

* INDICATES FLOW IS IN THE REVERSE DIRECTION TO THAT SHOWN

DESIGN CRITERIA

ITEM		ADWF	PWWF
BASIC DATA			
ADWF (MGD)	1.7		
PDWF (MGD)	2.6		
PWWF (MGD)	5.5		
PWWF, INSTANTANEOUS (MGD)	10.0		
BIOCHEMICAL OXYGEN-DEMAND (BOD'S) (MG/L)	30		
" " " " " (LB./DAY)	826		
SUSPENDED SOLIDS (SS) (MG/L)	30		
" " " (LBS./DAY)	826		
PRIMARY CLARIFIER (EXISTING)			
NUMBER	1		
DIAMETER (FT.)	55		
SIDE WATER DEPTH (FT.)	9.5		
SURFACE LOADING RATE (GAL/DAY/SQ.FT.)		716	2315
DETENTION TIME (HOURS)		2.38	0.74
FIXED FILM REACTORS			
NUMBER	2		
DIAMETER (FT.)	40		
DEPTH (FT.)	32		
DESIGN LOADING RATE (LBS. BOD'S/1000 CF/DAY)	30		
HYDRAULIC LOADING RATE (MIN.) (GPM/SQ.FT.)	0.71		
(MAX.) (GPM/SQ. FT.)	3.0		
RECIRCULATION RATE @ PUMPED RATE 4200 GPM (%)		255	6
REACTOR FEED PUMPS 2 (+ 1 STANDBY)			
MAX.FLOW (GPM) EACH	900		
MAX.FLOW (GPM) EACH	2100		
SECONDARY SEDIMENTATION TANKS			
NUMBER	2		
WIDTH (FT.)	20		
LENGTH (FT.)	88		
SIDE WATER DEPTH (FT.)	14		
TOTAL WEIR LENGTH (FT.)	288		
SURFACE LOADING RATE (GAL/DAY/SQ.FT.)		483	1563
OVERFLOW RATE (GAL/DAY/LIN. FT.)		5902	19097
DETENTION TIME (HRS.)		5.2	1.6
CHLORINE CONTACT TANKS			
NUMBER	2		
LENGTH (FT.)	110		
WIDTH (FT.)	5.4		
DEPTH (FT.)	10		
DETENTION TIME (MIN.)		75	23
CHLORINATORS	2		
MAX. FLOW (LBS/DAY)	4000		
SULFONATORS	2		
MAX. FLOW (LBS./DAY)	1000		
SLUDGE THICKENER			
NUMBER	1		
DIAMETER (FT.)	20		
LOADING RATE (LBS./SQ.FT./HR.)	0.35		
PRIMARY DIGESTER			
NUMBER	1		
DIAMETER	20		
SIDE WATER DEPTH	45		
LOADING (LBS./CF DAY)	0.16		
DETENTION TIME (DAYS)	23		
SECONDARY DIGESTER (EXISTING)			
NUMBER	1		
DIAMETER	75		
DEPTH	12.5		
DETENTION TIME (DAYS)	91		
VACUUM FILTER (EXISTING)			
NUMBER	1		
FILTER DRUM AREA IN (SQ. FT.)	113		
SOLIDS LOADING (LBS./SQ. FT./HR.)	2.3		

Record Drawing
This record drawing is based upon the information contained in the contractor's submittals, shop drawings, and other data furnished by the contractor. Owner is not responsible for any errors or omissions which may appear in such submittals as a result of incorrect information supplied.
Date: 4-29 19 89

Revised	Description	Submit.	Appr'd.	Date
Refer to Tracing for Latest Revision				

Reference Information and Notes:

Designed JHF
Drawn JHF
Checked JHF
Date 1-29-81

Wastewater Plant Improvements C-06-2464
Sausalito - Marin City Sanitary District

Kennedy/Jenks Engineers San Francisco
Submitted: Walter J. Hansman C9370 Approved: Robert J. Avery

HYDRAULIC PROFILE AND DESIGN CRITERIA

Scale NONE
Job No. 0112
Sheet G-4 of

SAN FRANCISCO BAY

S 13°40' W 222.29

N 80°45' E

S 80°45' W

99

100

TOE

DH-3

DH-12

DH-13

DH-10

DH-2

DH-1

DH-6

DH-7

DH-8

DH-11

EXIST. OUTFALL

INFLUENT VALVE BOX

ACCESS CAUSEWAY (N)

CONTROL BLDG. (N) (CHLORINE CONTACT TANKS BELOW) (N)

FIXED FILM REACTOR 2 (N)

FIXED FILM REACTOR (N)

SECONDARY SEDIMENTATION TANKS BELOW

454.85

S 19°49' E TRUE (PLANT NORTH-SOUTH GRID)

EFFLUENT SCREEN SUMP

CURB

ROAD (EXIST.)

PRIMARY SEDIMENTATION TANK (EXIST.)

58'-0" ⌀

(SECONDARY DIGESTER BELOW. EXIST.)

FILTER BLDG. (EXIST.)

ACCESS PLATFORM (N)

THICKENER (N)

PRIMARY DIGESTER (N)

GENERATOR BLDG. (N)

EXIST. CONTOURS

4'-6"

902

101

102

103

104

110

120

130

60'-6"

21'-0"

61'-0"

10'-0" ⌀

GRIT PLATFORM NOT SHOWN FOR CLARITY

NEW MAIN XFMR (E-9) & SWITCHBOARD

2-2'x3' PULLBOXES (480V)

EXIST. CONC. PAVEMENT

(-) 14% SLOPE (±)

(-) 9% SLOPE (±)

(-) 11% SLOPE (±)

NEW 4" HIGH ROLLED ASPHALT BERM

OFFICE (EXIST.)

TREE

CONCRETE SECTION (EXIST.)

SAW CUT & CONFORM TO EXISTING ASPHALT

NEW ASPHALT PAVING

STEEP/SHARP RETURN

SHOP (EXIST.)

VALVE BOX

CONC. WALL (EXIST.)

CONCRETE RETAINING WALL

TRANSITION FROM SUPER ELEV. TO CROWN IN THIS AREA AS REQUIRED

4" PG&E PRIMARY DUCT, 3'(±) COVER, NO ENCASEMENT (HIGH VOLTAGE)

3'x5' PG&E PULLBOX (HIGH VOLTAGE)

2-2'x3' PULLBOXES (480V) 15" (±) COVER

CATCH BASIN (TYP.)

EXIST. CULVERT

EXIST. CULVERT

3'x5' PG & E PULLBOX (HIGH VOLTAGE)

1'-0" 2'-0" 1'-6" 5'-0" 15'-6" 84'-6" 12'-6" 52'-6"

HEAVY TREES AND BRUSH

STORAGE (EXIST.)

STORAGE (EXIST.)

GARAGE (EXISTING)

DISTRICT RESIDENCE (EXIST.)

EXIST. DRIVEWAY (EXIST.)

SHED (EXIST.)

REMOVE CUTBACK AROUND PULLBOX AND PLACE NEW ASPHALT

SAW CUT AND CONFORM TO EXIST. DRIVEWAY

MECHANICAL PIPES SLIPPED THROUGH CMP ACROSS ROAD

18" CMP CULVERT 24" (±) COVER

(-) 18% SLOPE (±) FORT BAKER RD TO SHOP

ACCESS ROAD (EXIST.)

2" PVC ELECT. (TOP) 18" (±) COVER, 4" PVC WATER BOTTOM

18" CMP CULVERT 12" (±) MIN. COVER

EXIST 15" CMP CULVERT

CHLORINE STORAGE BUILDING (N)

EQUIP. STOR. (N)

EXIST. SULFUR DIOXIDE TANK TO BE REMOVED, NEW SIDEWALK

2'-0"

±6"

2½" ⌀ GATE POST

TO PLANT

TO FORT BAKER

DIRT (EXISTING)

TO STORAGE AREA

EDGE OF NEW PAVEMENT

PAVE EXISTING DIRT ROAD WITH TYPICAL SECTION

45'(±)

4" CHAIN POST (TYP. OF 2)

EXIST. PAVING

MANUAL SWING GATE

2-2'x3' PULLBOXES (480V)

6" GATE POST

2' WIDE CONC. VALLEY GUTTER

SAW CUT EXISTING ASPHALT

1'x7'(±) GATE TRACK (SAVE) FOR ELECTRIC SLIDE GATE

REPAVE OUTSIDE GATE & CONFORM TO FORT BAKER ROAD

2' WIDE VALLEY GUTTER

ACCESS ROAD (FORT BAKER ROAD)

EXIST. CHLORINE STORAGE BLDG. TO BE CONVERTED TO NEW SULFUR DIOXIDE STORAGE BLDG.

APPLY TACK COAT & FILL IN GAP BETWEEN NEW SIDEWALK & EXISTING PAVING WITH NEW A.C.

SAW CUT & REMOVE TEMPORARY PATCH. APPLY TACK COAT AND NEW A.C.

GRAPHIC SCALE

1" = 20'

0 10 20 30 40 50

△1 OVER EXCAVATE LOOSE MATERIAL & BACKFILL W/CL. II AGG. BASE IN 8" MAX. LIFTS TO 90% RELATIVE COMPACTION WITH THE TOP 6" TO 95%, APPROXIMATELY 1' BELOW NEW SUBGRADE AT CENTERLINE OF ROAD TO APPROXIMATE 3' BELOW NEW SUBGRADE 3' OUTSIDE EDGE OF PAVING. APPROXIMATELY 30 CUBIC YARD

EXISTING ELECTRICAL DUCT ENCAGEMENT (220 V) AT HUMP IN ROAD FLUSH WITH EXISTING PAVEMENT. REMOVE AND CUT 1'(±) TO CONFORM VERTICAL CURVE TO SLOPE OF PULL BOXES. IF NECESSARY PULLBOX GRADES CAN BE ADJUSTED SLIGHTLY TO SMOOTH OUT FINISHED SURFACE

PAVING NOTES

1. REFERENCE AND/OR OFF-SET EXISTING GRADES. NEW FINISH GRADES TO MATCH EXISTING.
2. SAW CUT ASPHALT WHERE SHOWN ON SITE PLAN. SAW CUT SHALL CONSIST OF SCORING LINE 1½" (MIN.) DEEP AND BREAKING BACK REMAINDER OF A.C. FOR A STEPPED JOINT BELOW THE SURFACE.
3. REMOVE ALL EXISTING ASPHALT WITHIN BOUNDARIES SHOWN ON SITE PLAN, 3" THICKNESS (±).
4. REMOVE NATIVE MATERIAL AS REQUIRED TO ACCOMODATE NEW ROAD SECTION & MAINTAIN EXISTING GRADES.
5. SCARIFY & COMPACT SUBGRADE TO 95% RELATIVE COMPACTION, ASTM D1557.
6. SPREAD & COMPACT 6" CALTRANS CLASS 2 AGGREGATE BASE, ¾" MAXIMUM SIZE, 95% RELATIVE COMPACTION, ASTM D1557.
7. APPLY PRIME COAT & TACK COAT. SPREAD & COMPACT 3½" ASPHALT CONCRETE IN TWO LIFTS APPLY SEAL COAT. REFER TO ATTACHED SPECIFICATIONS FOR PRODUCTS AND INSTALLATION.

△2 OVER EXCAVATE SOFT MATERIAL THIS AREA & REPLACE W/CL. II AGG. BASE, APPROX. 30 C.Y.

△3 OUTSIDE FACE OF THE SECONDARY SEDIMENTATION TANKS AND CHLORINE CONTACT TANKS EAST WALL (EXCLUDING 4'-0" WIDE WALKWAY) RUNS NORTH-SOUTH PARALLEL TO PROPERTY LINE 7 FEET DUE WEST

△4

1. BM 1 = BENCHMARK 1, EL 120.58 (DATUM USGS 1929 MSL+100) ESTABLISHED BY HOFFMAN & ALBRITTON TACK IN EXPANSION JOINT.
2. BOUNDARY LINES ARE TRUE DIRECTIONS. ALL DIMENSIONS ON THIS SHEET ARE LAID FROM PLANT GRID NORTH-SOUTH AND/OR EAST-WEST LINES.
3. FOR LOCATION OF THESE STRUCTURES SEE ARCHITECTURAL DRAWINGS.
4. EXISTING SEAWALL. REMOVE SECTIONS AS NECESSARY TO ACCOMODATE PIPING OR ROADWAY FOOTINGS.
5. DRILL HOLE INFORMATION SHOWN ON G-9
6. ALL STRUCTURES NOT SHOWN AS BEING EXISTING ARE PART OF THIS CONTRACT.

△5 (E) MECHANICAL & ELECTRICAL DUCT BANK 1' COVER (±) (2-1" WRAP STL. ABAND. Cl_2 & SO_2, 1" PVC ELECT.)

△6 (N) MECHANICAL DUCT BANK 2' COVER (±) (N) CONCRETE ENCASED ELECT. DUCT BANK 1' COVER (±)

△7 BUILD UP SHOULDER WITH FILL

15'(±) MIN. ROAD SECTION WIDEN & CONFORM TO EXISTING BOUNDARIES AS REQUIRED

6½" A.C. IN 3 LIFTS

1½" PVC SO_2 VAC

1½" PVC Cl_2 VAC

2% SLOPE

1¼" WRAP STL. H.W.

SCARIFY SUBGRADE & COMPACT TO 95% RELATIVE COMPACTION

ROLL A.C. 18"(±) UP SLOPE FEATHER TO 1½" MIN. THICKNESS

TYPICAL SECTION "A"

SCALE: NONE

15'(±) MIN. ROAD SECTION WIDEN & CONFORM TO EXISTING BOUNDARIES AS REQUIRED

6½" A.C. IN 3 LIFTS

2% SLOPE 2% SLOPE

4" A.C. BERM

EXIST. CONCRETE WALL

FOR UTILITIES THIS AREA REFER TO SECTION "A" & SITE PLAN.

SCARIFY SURFACE AND COMPACT TO 95% RELATIVE COMPACTION

TYPICAL SECTION "B"

SCALE: NONE

△2 THE CONTRACTOR'S WORK AREA SHOWN INDICATES THE GENERAL LOCATION AND APPROXIMATE MINIMUM SPACE THAT MAY BE USED FOR THE ENTIRE PROJECT DURATION. THE PROPERTY IS VERY STEEP, AND ONLY A LIMITED AMOUNT OF LEVEL OR NEAR LEVEL SPACE IS AVAILABLE FOR USE. THE OWNER MAY BE ABLE TO PROVIDE ADDITIONAL SPACE IN THE AREA NEAR THE GARAGE AND SHOP FOR THE CONTRACTOR'S TEMPORARY USE. IF THE CONTRACTOR IS ALLOWED TEMPORARY USE OF SUCH SPACE, HE SHALL VACATE IT WHEN REQUESTED BY THE OWNER.

LEGEND

- DH-6 – DRILLED HOLE #6
- TOE – TOE OF EMBANKMENT
- —120— – EXIST. CONTOUR

△1	FIELD CHANGE
△2	CLARIFICATION
△3	CO NO. 33
△4	CO NO. 23
△5	CO NO. 8
△4	CO NO. 3
△3	ADD. NO. 3
△2	ADD. NO. 2
△1	ADD. NO. 1

Revised	Description	Submit.	Appr'd.	Date
Refer to Tracing for Latest Revision				

Reference Information and Notes:

REFER TO THE NOTE WITH THIS NUMBER

Record Drawing

These record drawings have been prepared, in part, on the basis of information compiled and furnished by others. Kennedy/Jenks/Chilton is not responsible for any errors or omissions in this document as a result of information provided by others.

Dated 4-29, 19 88

RECORD DRAWING

Designed	JHF
Drawn	JHF
Checked	JHF
Date	1-29-81

Wastewater Plant Improvements C-06-2464
Sausalito-Marin City Sanitary District

Kennedy/Jenks Engineers San Francisco

Submitted: Walter F. Kaufman C9370 Approved: Robert J. Orsi

PLANT ACCESS ROAD RESTORATION
REQUEST FOR QUOTE NO 37
PLANT SITE

Scale	1"=20'
Job No.	0112
Sheet	G-5
of	

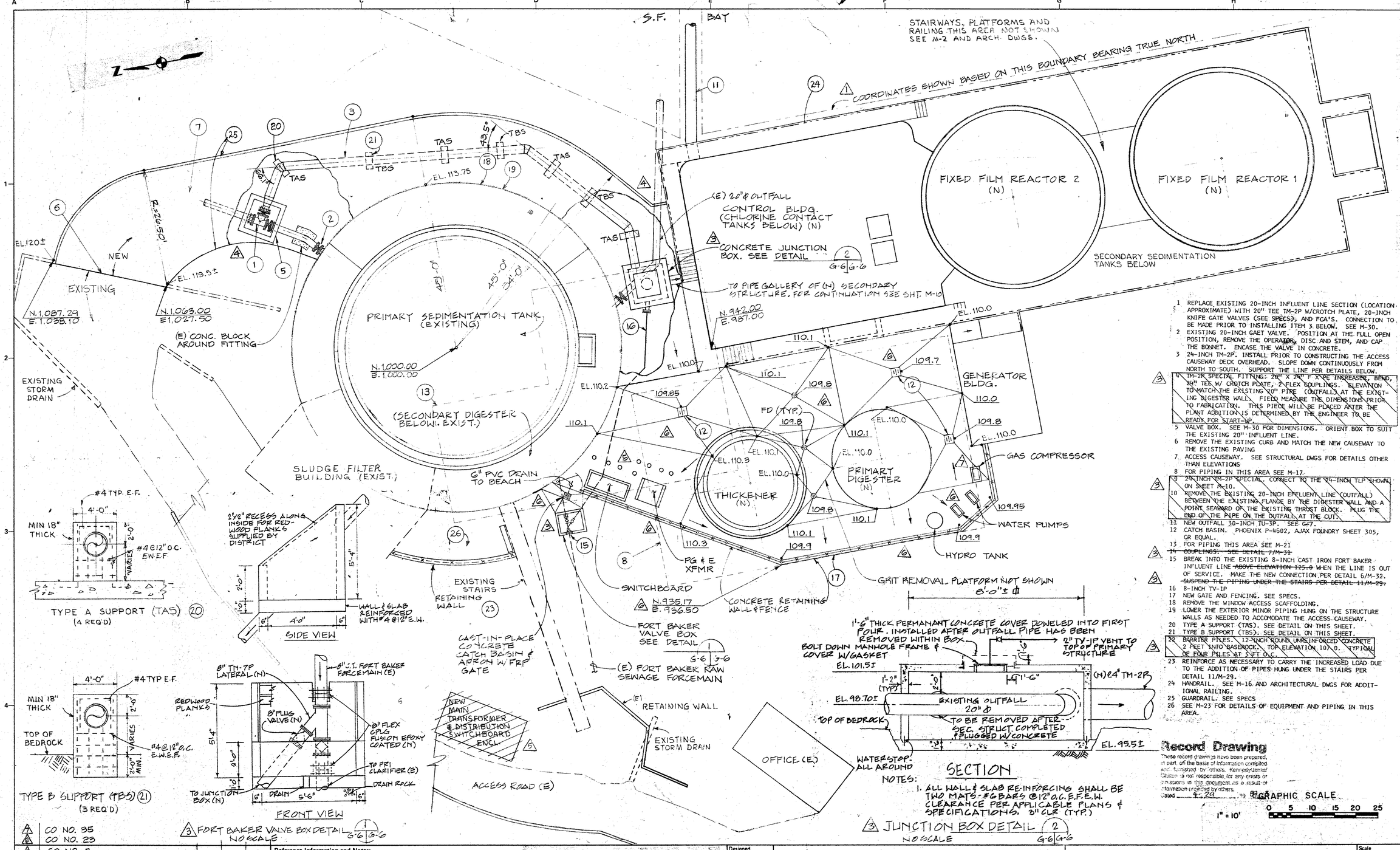

1 REPLACE EXISTING 20-INCH INFLUENT LINE SECTION (LOCATION APPROXIMATE) WITH 20" TEE TM-2P W/CROTCH PLATE, 20-INCH KNIFE GATE VALVES (SEE SPECS), AND FCA'S. CONNECTION TO BE MADE PRIOR TO INSTALLING ITEM 3 BELOW. SEE M-30.
2 EXISTING 20-INCH GAET VALVE. POSITION AT THE FULL OPEN POSITION, REMOVE THE OPERATOR, DISC AND STEM, AND CAP THE BONNET. ENCASE THE VALVE IN CONCRETE.
3 24-INCH TM-2P. INSTALL PRIOR TO CONSTRUCTING THE ACCESS CAUSEWAY DECK OVERHEAD. SLOPE DOWN CONTINUOUSLY FROM NORTH TO SOUTH. SUPPORT THE LINE PER DETAILS BELOW.
3 4 TM-2R SPECIAL FITTING: 20" X 24" F X PE INCREASER, BEND, 36" TEE W/ CROTCH PLATE, 2 FLEX COUPLINGS. ELEVATION TO MATCH THE EXISTING 20" PIPE CONTAILS AT THE EXISTING DIGESTER WALL. FIELD MEASURE THE DIMENSIONS PRIOR TO FABRICATION. THIS PIECE WILL BE PLACED AFTER THE PLANT ADDITION IS DETERMINED BY THE ENGINEER TO BE READY FOR START-UP.
5 VALVE BOX. SEE M-30 FOR DIMENSIONS. ORIENT BOX TO SUIT THE EXISTING 20" INFLUENT LINE.
6 REMOVE THE EXISTING CURB AND MATCH THE NEW CAUSEWAY TO THE EXISTING PAVING
7 ACCESS CAUSEWAY. SEE STRUCTURAL DWGS FOR DETAILS OTHER THAN ELEVATIONS
8 FOR PIPING IN THIS AREA SEE M-17.
3 9 24-INCH TM-2P SPECIAL. CONNECT TO THE 24-INCH TLP SHOWN ON SHEET M-10.
10 REMOVE THE EXISTING 20-INCH EFFLUENT LINE (OUTFALL) BETWEEN THE EXISTING FLANGE BY THE DIGESTER WALL AND A POINT SEAWARD OF THE EXISTING THRUST BLOCK. PLUG THE END OF THE PIPE ON THE OUTFALL AT THE CUT.
11 NEW OUTFALL 30-INCH TU-3P. SEE G#7.
12 CATCH BASIN. PHOENIX P-4602, AJAX FOUNDRY SHEET 305, OR EQUAL.
13 FOR PIPING THIS AREA SEE M-21
~~14 COUPLINGS. SEE DETAIL 7/M-31~~
3 15 BREAK INTO THE EXISTING 8-INCH CAST IRON FORT BAKER INFLUENT LINE ~~ABOVE ELEVATION 125.0~~ WHEN THE LINE IS OUT OF SERVICE. MAKE THE NEW CONNECTION PER DETAIL 6/M-32.
5 ~~SUSPEND THE PIPING UNDER THE STAIRS PER DETAIL 11/M-29.~~
16 8-INCH TV-1P
17 NEW GATE AND FENCING. SEE SPECS.
18 REMOVE THE WINDOW ACCESS SCAFFOLDING.
19 LOWER THE EXTERIOR MINOR PIPING HUNG ON THE STRUCTURE WALLS AS NEEDED TO ACCOMODATE THE ACCESS CAUSEWAY.
20 TYPE A SUPPORT (TAS). SEE DETAIL ON THIS SHEET.
21 TYPE B SUPPORT (TBS). SEE DETAIL ON THIS SHEET.
3 22 BARRIER PILES. 12-INCH ROUND UNREINFORCED CONCRETE 2 FEET INTO BEDROCK. TOP ELEVATION 107.0. TYPICAL OF FOUR PILES AT 5 FT O.C.
23 REINFORCE AS NECESSARY TO CARRY THE INCREASED LOAD DUE TO THE ADDITION OF PIPES HUNG UNDER THE STAIRS PER DETAIL 11/M-29.
24 HANDRAIL. SEE M-16 AND ARCHITECTURAL DWGS FOR ADDITIONAL RAILING.
25 GUARDRAIL. SEE SPECS
26 SEE M-23 FOR DETAILS OF EQUIPMENT AND PIPING IN THIS AREA.

Record Drawing

These record drawings have been prepared, in part, on the basis of information compiled and furnished by others. Kennedy/Jenks/Chilton is not responsible for any errors or omissions in this document as a result of information provided by others.
Dated 6-20 '89

GRAPHIC SCALE
1" = 10'
0 5 10 15 20 25

Revised	Description	Submit.	Appr'd.	Date
5	CO NO. 35			
4	CO NO. 23			
3	CO. NO. 8			
2	CO NO. 3			
1	FIELD CHANGE			
1	CLARIFICATION			
1	ADD. NO. 1			

Refer to Tracing for Latest Revision

Reference Information and Notes:

REFER TO THE NOTE WITH THIS NUMBER

Record Drawing
RECORD DRAWING

Designed JHF
Drawn JHF
Checked JHF
Date 1-29-81

Wastewater Plant Improvements C-06-2464
Sausalito - Marin City Sanitary District
Kennedy/Jenks Engineers San Francisco
Submitted: Walter Hausman C9370
Approved:

MAJOR OUTSIDE PIPING AND ACCESS CAUSEWAY

Scale 1" = 10'
Job No. 0112
Sheet G-6 of

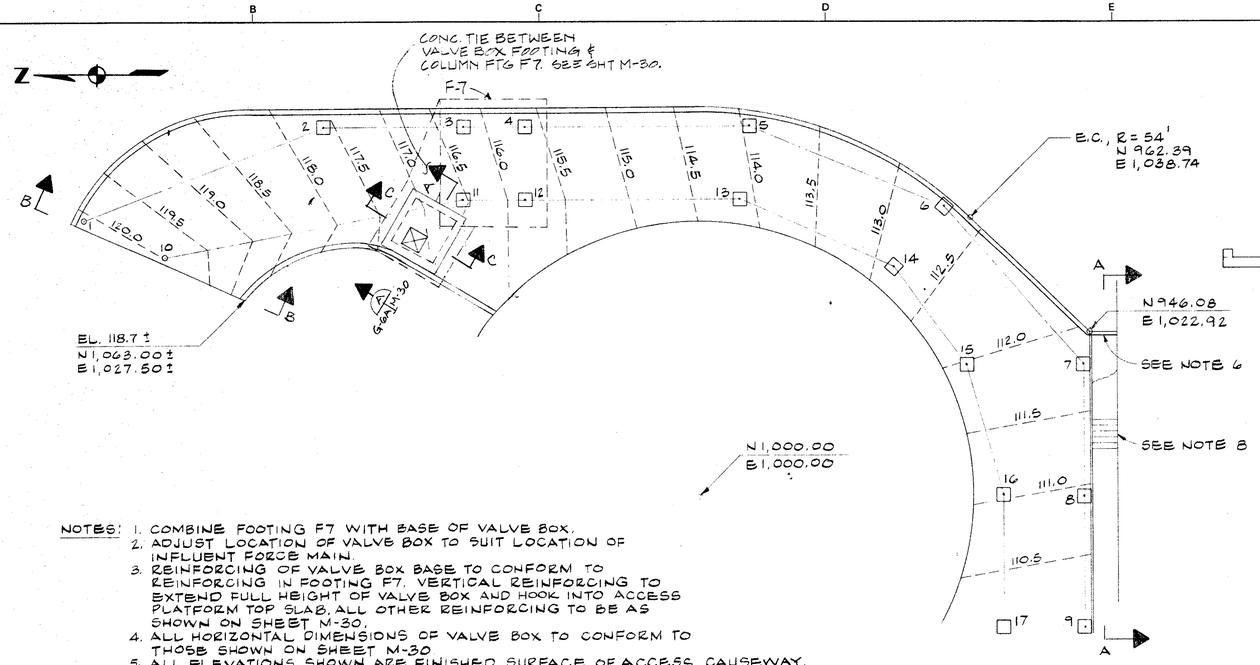

NOTES:
1. COMBINE FOOTING F7 WITH BASE OF VALVE BOX.
2. ADJUST LOCATION OF VALVE BOX TO SUIT LOCATION OF INFLUENT FORCE MAIN.
3. REINFORCING OF VALVE BOX BASE TO CONFORM TO REINFORCING IN FOOTING F7. VERTICAL REINFORCING TO EXTEND FULL HEIGHT OF VALVE BOX AND HOOK INTO ACCESS PLATFORM TOP SLAB, ALL OTHER REINFORCING TO BE AS SHOWN ON SHEET M-30.
4. ALL HORIZONTAL DIMENSIONS OF VALVE BOX TO CONFORM TO THOSE SHOWN ON SHEET M-30
5. ALL ELEVATIONS SHOWN ARE FINISHED SURFACE OF ACCESS CAUSEWAY.
6. EXTEND 2'-3" CURB (WITHOUT RAILING) TO FACE OF CHLORINE CONTACT STRUCTURE
7. LOCATE BIRD SCREENS AT CHLORINE CONTACT STRUCTURE AS INDICATED ON SECTION A.
8. MODIFY SECTION N ON SHEET S-13 TO SHOW 6 RISERS AT THIS LOCATION. REINFORCING TO REMAIN UNCHANGED.

R.F.Q. NO. 2 - ACCESS CAUSEWAY MODIFICATIONS

SCALE: 1" = 10'

COORDINATES AND FINISH GRADE ELEVATIONS AT ACCESS CAUSEWAY COLUMN CENTERS

POINT	COORDINATE N	COORDINATE E	ELEV.*	POINT	COORDINATE N	COORDINATE E	ELEV.*
1	1085.31	1038.87	120.10	10	1074.77	1034.27	120.00
2	1052.42	1051.50	117.62				
3	1032.92	1051.50	116.24	11	1032.92	1041.50	116.51
4	1024.33	1051.50	115.64	12	1024.33	1041.50	115.80
5	993.08	1051.50	113.97	13	994.33	1041.50	114.13
6	966.08	1040.51	112.67	14	973.14	1032.08	112.84
7	946.92	1018.50	111.83	15	962.92	1018.50	111.99
8	946.92	1000.00	110.92	16	957.75	1000.00	111.03
9	946.92	981.50	110.00	17	957.75	981.50	110.11

* See Note 5

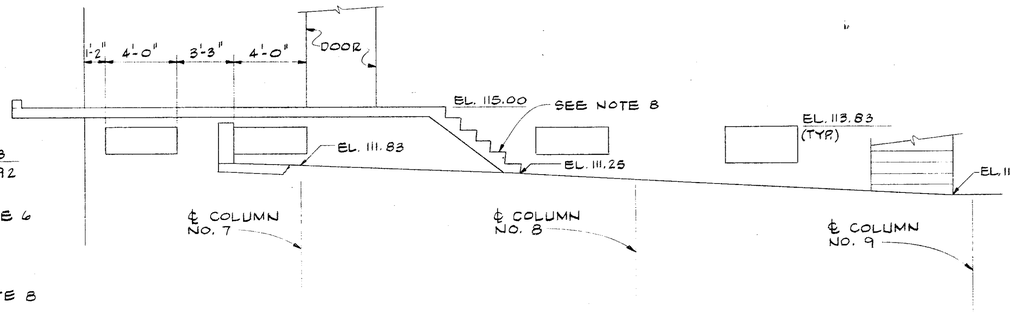

SECTION A
MODIFIED CONTROL BUILDING NORTH ELEVATION
SCALE: 1/4" = 1'-0"

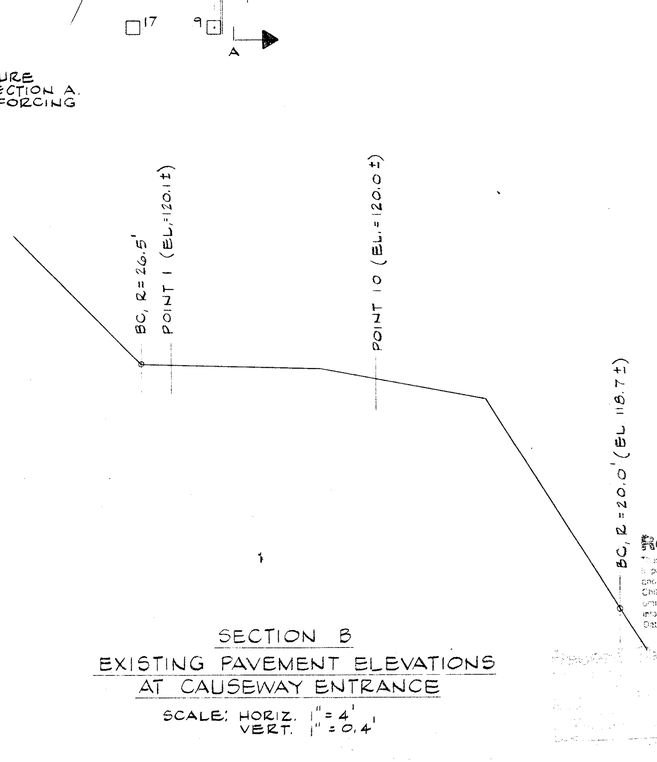

SECTION B
EXISTING PAVEMENT ELEVATIONS AT CAUSEWAY ENTRANCE
SCALE: HORIZ. 1" = 4'
VERT. 1" = 0.4'

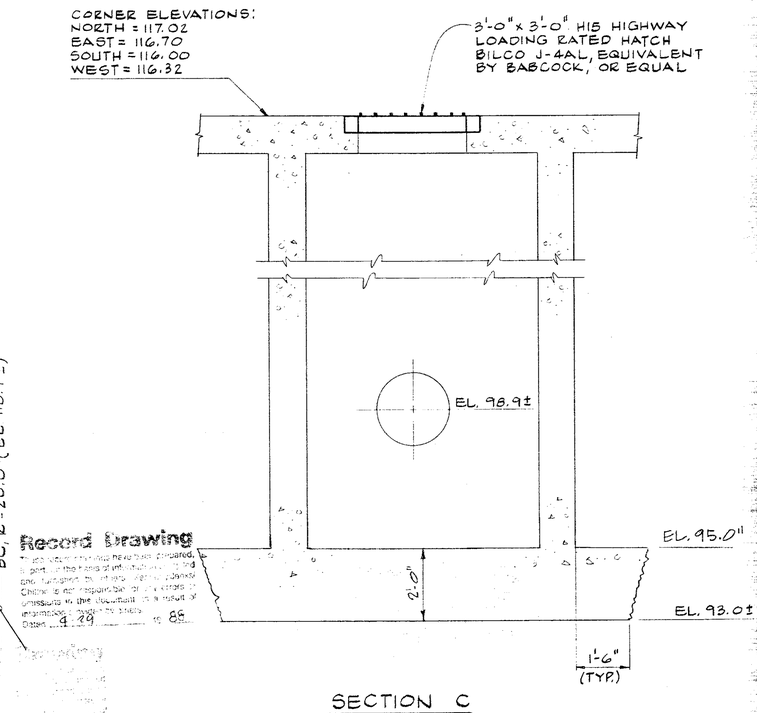

Record Drawing

SECTION C
SCALE: 1" = 2'-0"

NOTE: FOR REINFORCING DIMENSIONS, DETAILS SEE SHT M-30.

Revised	Description	Submit.	Appr'd.	Date
Refer to Tracing for Latest Revision				

Reference Information and Notes:

Designed RED
Drawn NDL
Checked RED
Date 1-15-85

WASTEWATER TREATMENT PLANT IMPROVEMENTS
C-06-2464
SAUSALITO-MARIN CITY SANITARY DISTRICT
Kennedy/Jenks Engineers — San Francisco
Submitted: Approved:

ACCESS CAUSEWAY AND INFLUENT VALVE BOX MODIFICATIONS
C.O. NO. 3

Scale AS SHOWN
Job No. 4067
Sheet G-6A
of

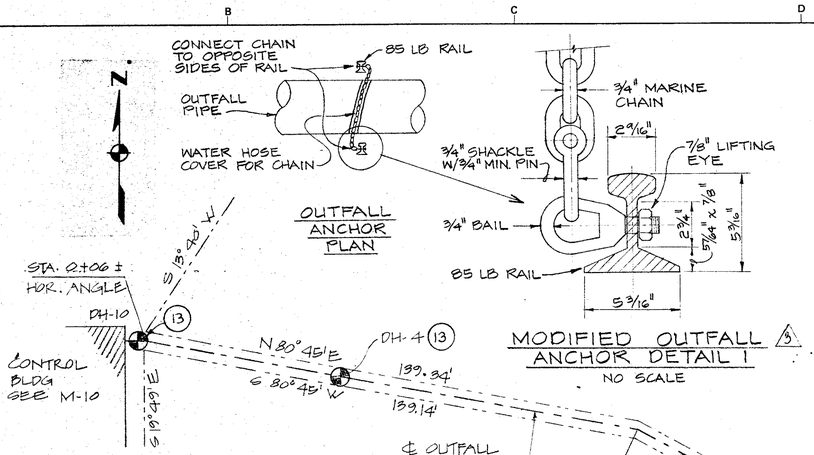

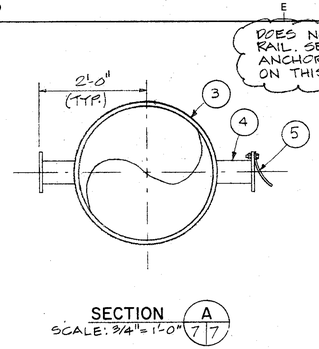

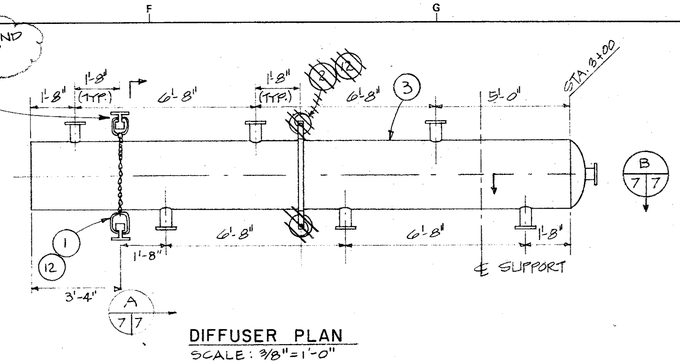

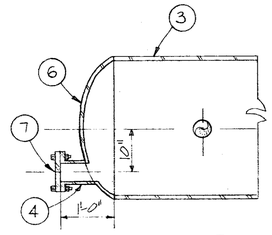

1 ANCHORAGE TYPE 1. SEE DETAIL 1/G-7
~~2 ANCHORAGE TYPE 2. SEE DETAIL 2/G-7~~
3 30-INCH TU-3P
4 4" TU-3P NOZZLE W/4" TU-3P 150# FLANGE.
5 9" ROUND 3/8" THICK COMPOSITION NEOPRENE IMPREGNATED NYLON FLAPPER FOR BACKFLOW PREVENTION. ATTACH TO FLANGE W/ TWO ½" MIN. BOLT, NUT AND WASHER SETS OF ASTM B150 ALUMINUM BRONZE AT THE TOP OF THE FLANGE. FLAPPER TYPICAL AT ALL SIDE NOZZLES.
6 MANUFACTURER'S STANDARD END CLOSURE.
7 TU-3P BLIND FLANGE. ATTACH W/ ONE ½" MIN. BOLT, NUT ANS WASHER SET OF ASTM B150 ALUMINUM BRONZE AT BOTH THE TOP AND THE BOTTOM. NO GASKET REQUIRED.
8 85-LB RAIL.
~~9 7/8 INCH LINK DIAMETER MARINE CLEVIS.~~
10 3/4-INCH DIAMETER LINK MARINE ANCHOR CHAIN. COVER W/ GARDEN TYPE HOSE FOR PROTECTION OF THE OUTFALL PIPE.
11 CHANCE TYPE HELICAL ANCHOR SET (2 ANCHORS PER SET) OF AISI TYPE 316 SS, SIZED TO RESIST ALL FORCES INCLUDING 10 KNOT TIDAL ACTION AND SURFACE WAVE ACTIVITY FROM STORM OR VESSEL WAKE.
12 ANCHORAGE LOCATION IS AS SHOWN FOR THE 100 FEET OF DIFFUSER SECTIONS. SHOREWARD OF THE DIFFUSER, ANCHORAGE SHALL BE AT 10 FOOT CENTERS, STARTING 5 FEET FROM THE DIFFUSER TO PIPELINE JOINT AND CONTINUING SHOREWARD.
13 DRILL HOLE INFORMATION IS SHOWN ON SHEET G-9.
14 CONTRACTOR SHALL REMOVE ALL ROCKS, DEBRIS AND OTHER MATERIAL THAT COULD DAMAGE THE OUTFALL FROM WITHIN THE OUTFALL ALIGNMENT PROPERTY LIMITS. PRIOR TO COMMENCING PIPE LAYING OPERATIONS, THE CONTRACTOR SHALL INSPECT THE ENTIRE OUTFALL ROUTE WITH QUALIFIED DIVERS TO DETERMINE THE PRESENCE OR ABSENCE OF MATERIAL NOTED ABOVE.

15. At the midpoint between anchors, provide suitable square or rectangular reinforced concrete weights of sufficient size to produce a negative pipe buoyancy of not less than 1.1. Weight will be designed to distribute load to the pipe without damaging pipe. Provide a protective wrapping of 1/4-inch thick neoprene between the weights and the pipe. Neoprene wrapping shall extend a minimum of 2 inches beyond the ends of each weight. All hardware required to hold the weights together shall be Type 316 stainless steel. Weight shall be attached so it will not move along the length of the pipe, but not so tightly as to damage the pipe. Minimum thickness of any stainless steel fastener shall be 1/2 inch. The Contractor shall submit for favorable review details of the weight construction, method of attachment, and netagive buoyancy calculations.

16. In Detail 1 (Type 1 - Anchorage), the note "Drive to refusal" shall mean 30 blows per foot with a pile hammer rated at 15,000 foot pounds of energy (Engineering News Record Formula), or 20 feet, whichever comes first."

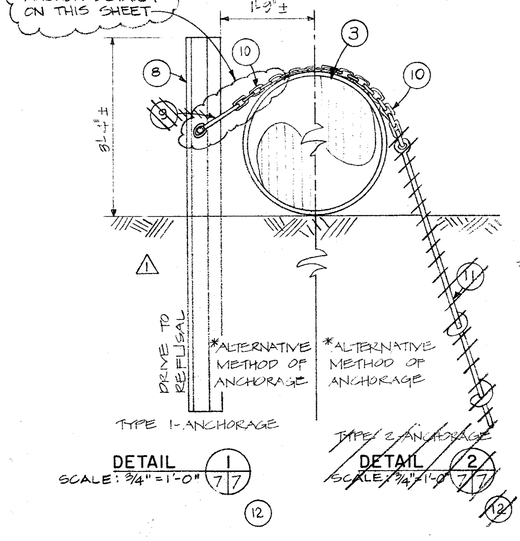

*CONTRACTOR SHALL SELECT ALTERNATIVE METHOD OF ANCHORAGE & INSTALL ON BOTH SIDES OF PIPE.

Record Drawing
THE INFORMATION SHOWN HEREON HAS BEEN COMPILED FROM DRAWINGS AND OTHER DATA FURNISHED BY THE CONTRACTOR. CHANGES IN THE CONSTRUCTION OR ADDITIONAL INFORMATION MAY HAVE RESULTED IN SUBSEQUENT REVISIONS.
Dated 4-29-82

GRAPHIC SCALE
3/8"=1'-0" 0 5 10
3/4"=1'-0" 0 1 2 3 4

Revised	Description	Submit.	Appr'd.	Date
3	CO NO. 17			
2	ADDENDUM NO. 2			
1	METHOD SELECTED			

Refer to Tracing for Latest Revision

Reference Information and Notes:
DIRECTIONS SHOWN ARE TRUE EXCEPT NORTH ARROW WHICH INDICATES PLANT GRID NORTH

REFER TO THE NOTE WITH THIS NUMBER

Designed JHF
Drawn JHF
Checked JHF
Date 1-29-81

Wastewater Plant Improvements C-06-2464
Sausalito - Marin City Sanitary District

Kennedy/Jenks Engineers **San Francisco**

Submitted: Walter Hassman C9370 Approved: Robert J. Ruby

OUTFALL

Scale AS SHOWN
Job No. 0112
Sheet G-7 of

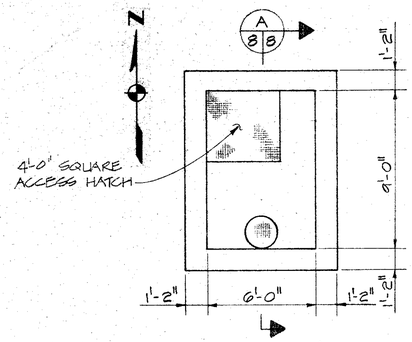

TOP PLAN (1)
SCALE: 1/4"=1'-0"

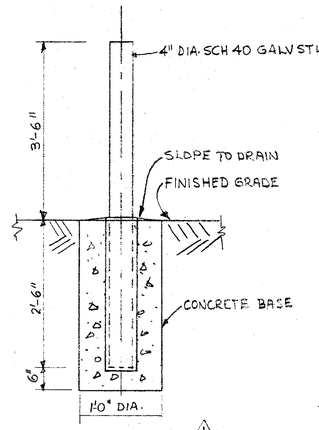

REMOVABLE BOLLARD DETAIL (1) 8/8
NO SCALE

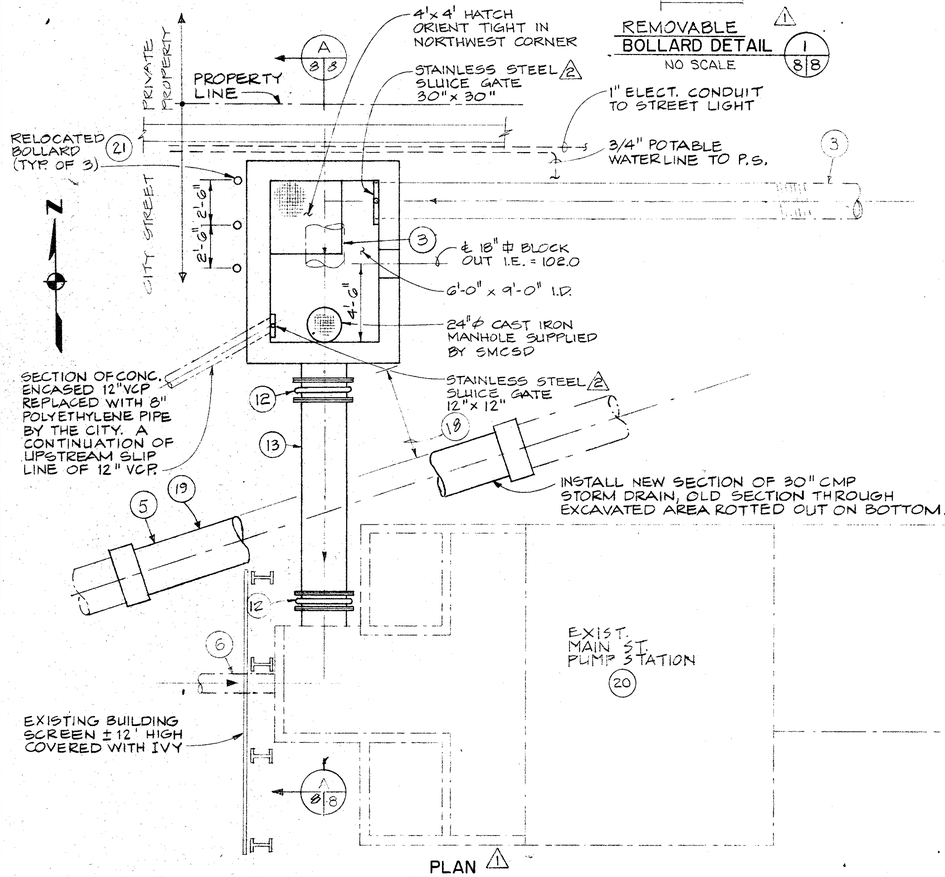

PLAN (1)
SCALE: 1/4"=1'-0"

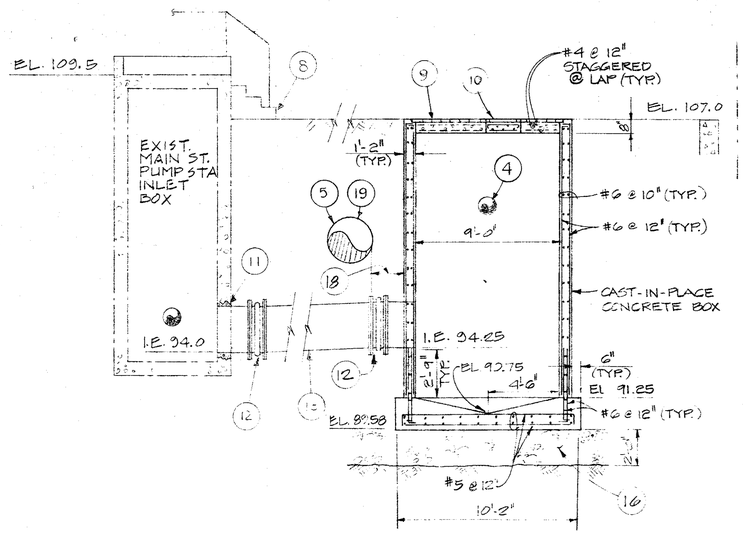

NOTE:
SITE SHALL BE KEPT DEWATERED UNTIL BACKFILL AT EL. 102.0 IS IN PLACE.

SECTION A (1)
SCALE: 1/4"=1'-0" 8/8

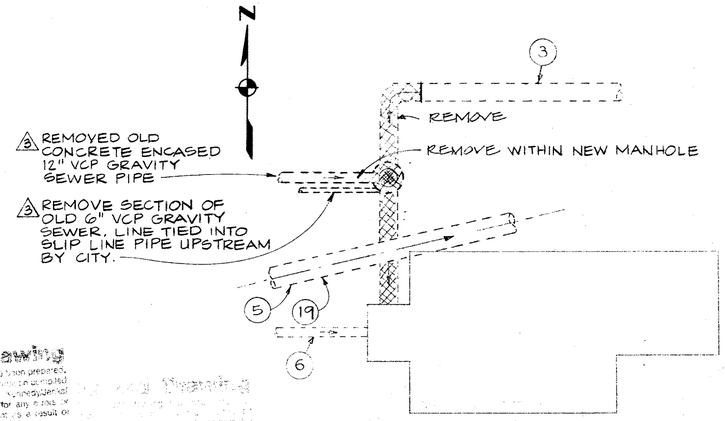

LOCATION OF EXISTING PIPING
PLAN
SCALE: 1/8"=1'-0"

~~1. 24" TxF-P 22 1/2°.~~
2. SQUEEZER BANDS. COVER WITH 1" MASTIC COATING. ~~DOUBLE WRAP W/10 MIL POLY-ETHYLENE TAPE 6" MIN. BEYOND ENDS OF MASTIC COATING.~~ WATERTIGHT FITTING.
3. EXISTING 24" CMP TO PUMP STATION. MAINTAIN THIS LINE IN SERVICE AT ALL TIMES. REMOVE SECTION ~~BETWEEN ITEM 2 AND THE PUMP STATION.~~
4. EXISTING 12" VCP TO EXISTING 24" CMP. ~~MAINTAIN THIS LINE IN SERVICE AT ALL TIMES.~~ REMOVE ~~THE~~ EXISTING MANHOLE. CONNECT TO NEW MANHOLE (ITEM 15) WITH MORTARED JOINT.
5. EXISTING 30" STORM DRAIN. PROTECT AND MAINTAIN THIS LINE IN SERVICE.
6. EXISTING 12" CMP TO PUMP STATION. MAINTAIN THIS LINE IN SERVICE.
7. ~~NEW GALVANIZED HANDRAIL TO MATCH~~ EXISTING RAILING ~~NEW~~ TO EXISTING ~~AND COAT W/GALVALLOY.~~
8. REMOVE EXISTING STAIRS AND REPLACE W/ NEW REINFORCED CONCRETE STAIRS. SEE STRUCTURAL DWGS.
~~9. NEW REINFORCED CONCRETE MANHOLE CAP.~~
10. JD-2AL ALUMINUM HATCH BY THE BILCO CO, NEW LONDON, CONN.; EQUIVILANT BY BABCOCK, OR EQUAL. MAKE DRAIN EMPTY DIRECTLY DOWN INTO MANHOLE AT CEILING. SURFACES IN CONTACT W/ CONCRETE TO BE FACTORY COATED W/ BITUMINOUS COATING.
11. REMOVE THE EXISTING CORRUGATED METAL PIPE AND MAKE A NEW CONNECTION USING NON-METALLIC, NON-SHRINK GROUT.
12. 30-INCH RUBBER EXPANSION JOINT, LA FAVORITE RUBBER MFG. CO. 9030; RED VALVE CO. J-1; OR EQUAL. ALL METALLIC SURFACES SHALL BE FUSION EPOXY COATED THE SAME AS FOR TX-3P.
13. 30" TX-3P, 0.25 INCH WALL THICKNESS, W/150# FLANGES. ALL HARDWARE TO BE NAVAL BRONZE. USE NON-METALLIC WASHERS TO PREVENT MARRING OF FLANGE SURFACES.
14. 8'-0" ID REINFORCED CONCRETE PIPE, TONGUE AND GROOVE, ASTM C-76, CLASS ~~I~~, WALL A. ALL JOINTS TO BE MORTARED. BREAK OUT HOLES FOR PIPE PENETRATIONS AS NECESSARY. FILL ALL SUCH HOLES WITH NON-SHRINK NON-METALLIC GROUT.
~~15. MANHOLE BASE. SEE DETAIL THIS SHEET.~~
16. PLACE MINIMUM OF 12" DRAIN ROCK UNDER MANHOLE BASE. BACKFILL USING NATIVE MATERIAL TO 90% RELATIVE DENSITY PER ASTM D1557.
~~17. NEW 24" TFP, SHAPE 1, COATING C.~~
18. MANHOLE TO CLEAR ITEM 5 BY 1 FT MIN.
19. VERIFY THE LOCATION PRIOR TO EXCAVATION FOR NEW STRUCTURES
20. FOR THE LOCATION OF THE PUMP STATION SEE SHEET G-1.
21. TRAFFIC BOLLARDS. SEE DETAIL 1/G-8

GRAPHIC SCALE
1/4" = 1'-0" 0 5 10

Record Drawing
These record drawings have been prepared, in part, on the basis of information supplied and furnished by others. Kennedy/Jenks is not responsible for any errors or omissions in this document as a result of information provided by others.
Dated: 9-84 88

Revised	Description	Submit.	Appr'd.	Date
3	CO NO. 50			
2	CO NO. 30			
1	FIELD CHANGE			

Refer to Tracing for Latest Revision

Reference Information and Notes:

(1) REFER TO THE NOTE WITH THIS NUMBER

Designed JHF
Drawn JHF
Checked JHF
Date 1-29-81

Wastewater Plant Improvements C-06-2464
Sausalito - Marin City Sanitary District
Kennedy/Jenks Engineers San Francisco
Submitted: Walter J. Hansman C9370 Approved: Richard J. Crowley

MAIN STREET PUMP STATION MODIFICATIONS

Scale AS SHOWN
Job No. 0112
Sheet G-8 of

LOG OF DRILL HOLE — DH-1

SF80016 Plate A-1.1 GTC

DRILLED April 9 & 10, 1980 WITH Rotary Wash
DIAMETER OF DRILL HOLE IN INCHES 3½
LOGGED BY T.H.

SURFACE ELEVATION IN FEET -7 DATUM Mean Sea Level

GEOLOGICAL CLASSIFICATION DESCRIPTION	ELEVATION IN FEET	DEPTH IN FEET	ENGINEERING CLASSIFICATION AND DESCRIPTION	TEST DATA M — D/(RC) — O
BEACH SEDIMENTS (Qb)	-10	5	GRAVELLY SAND (SP) with silt, blue-gray to gray-brown, medium to coarse grained, loose to medium dense; increasing density with depth, grades to gray-brown to red-brown, angular.	GS
FRANCISCAN FORMATION (KJbt)	-15, -20	10, 15	BASALT TUFF, orange-brown, moderately strong, highly fractured, weathered. Slightly weathered.	16-126-GS
		20, 25, 30, 35	Bottom of drill hole at 17 feet. Water depth of 5'4" at 12:45 p.m. on April 9, 1980. Poor core recovery due to wave action (less than 1%).	

SHEET 1 OF 1 LEGEND ON PLATE A-2
THE STRATIFICATION LINES REPRESENT THE APPROXIMATE BOUNDARY BETWEEN SOIL TYPES AND THE TRANSITION MAY BE GRADUAL

LOG OF DRILL HOLE — DH-2

SF80016 Plate A-1.2 GTC

DRILLED April 10, 1980 WITH Rotary Wash
DIAMETER OF DRILL HOLE IN INCHES 3½
LOGGED BY T.H. and M.R.

SURFACE ELEVATION IN FEET -4 DATUM Mean Sea Level

GEOLOGICAL CLASSIFICATION DESCRIPTION	ELEVATION IN FEET	DEPTH IN FEET	ENGINEERING CLASSIFICATION AND DESCRIPTION	TEST DATA M — D/(RC) — O
BEACH SEDIMENTS (Qb)	-5, -10	5	SANDY GRAVEL (GW) with silt, vari-colored, medium dense, some cobbles present. Sand and silt content increase with depth.	
FRANCISCAN FORMATION (KJbt)	-15, -20	10, 15	BASALT TUFF, orange-brown, highly fractured with clay fill, weathered. Slightly weathered.	14-129-GS
		20, 25, 30, 35	Bottom of drill hole at 18½ feet. Water depth of 2'6" at 2:00 p.m. on April 10, 1980. Poor core recovery due to wave action.	

SHEET 1 OF 1 LEGEND ON PLATE A-2
THE STRATIFICATION LINES REPRESENT THE APPROXIMATE BOUNDARY BETWEEN SOIL TYPES AND THE TRANSITION MAY BE GRADUAL

LOG OF DRILL HOLE — DH-3

SF80016 Plate A-1.3 GTC

DRILLED April 14 and 15, 1980 WITH Rotary Wash
DIAMETER OF DRILL HOLE IN INCHES 3½
LOGGED BY T.H.

SURFACE ELEVATION IN FEET -2 DATUM Mean Sea Level

GEOLOGICAL CLASSIFICATION DESCRIPTION	ELEVATION IN FEET	DEPTH IN FEET	ENGINEERING CLASSIFICATION AND DESCRIPTION	TEST DATA M — D/(RC) — O
BEACH SEDIMENTS (Qb)	-5	5	SANDY GRAVEL (GP) with silt, brown to red-brown, medium dense, angular, some cobbles. Increasing density with depth, vari-colored, increasing silt and sand content.	
FRANCISCAN FORMATION (KJsh)	-10, -15	10	SHALE, gray to blue-gray, weathered, highly fractured.	
		15, 20, 25, 30, 35	Bottom of drill hole at 14 feet. Water depth of 5'6" at 9:30 a.m. on April 14, 1980.	

SHEET 1 OF 1 LEGEND ON PLATE A-2
THE STRATIFICATION LINES REPRESENT THE APPROXIMATE BOUNDARY BETWEEN SOIL TYPES AND THE TRANSITION MAY BE GRADUAL

LOG OF DRILL HOLE — DH-4

SF80016 Plate A-1.4 GTC

DRILLED April 16, 1980 WITH Rotary Wash
DIAMETER OF DRILL HOLE IN INCHES 3½
LOGGED BY T.H.

SURFACE ELEVATION IN FEET -10 DATUM Mean Sea Level

GEOLOGICAL CLASSIFICATION DESCRIPTION	ELEVATION IN FEET	DEPTH IN FEET	ENGINEERING CLASSIFICATION AND DESCRIPTION	TEST DATA M — D/(RC) — O
BEACH SEDIMENTS (Qb)	-15	5	GRAVELLY SAND (SP-SM) with silt, gray near surface to vari-colored at depth. More gravel, angular.	GS
FRANCISCAN FORMATION (KJbt)	-20	10	BASALT TUFF, iron-oxide stained, weathered.	16-121 / 9-139
		15, 20, 25, 30, 35	Bottom of drill hole at 12 feet.	

SHEET 1 OF 1 LEGEND ON PLATE A-2
THE STRATIFICATION LINES REPRESENT THE APPROXIMATE BOUNDARY BETWEEN SOIL TYPES AND THE TRANSITION MAY BE GRADUAL

LOG OF DRILL HOLE — DH-5

SF80016 Plate A-1.5 GTC

DRILLED April 20 and 22, 1980 WITH Rotary Wash
DIAMETER OF DRILL HOLE IN INCHES 3½
LOGGED BY M.R.

SURFACE ELEVATION IN FEET -23 DATUM Mean Sea Level

GEOLOGICAL CLASSIFICATION DESCRIPTION	ELEVATION IN FEET	DEPTH IN FEET	ENGINEERING CLASSIFICATION AND DESCRIPTION	TEST DATA M — D/(RC) — O
MARINE ALLUVIUM (Qal)	-25, -30	5	CLAYEY GRAVEL (GC-GW) with sand, gray shell fragments. Increasing clay with depth, some sand, shell fragments.	
"Younger Bay Mud Deposits"(?)	-35	10	CLAY (CL) with gravel.	AL(29/10)
		15	SANDY GRAVEL (GW) with clay.	
FRANCISCAN FORMATION (KJbt)	-40, -45	20	BASALT TUFF, highly weathered, highly fractured. Slightly weathered.	
		25, 30, 35	Bottom of drill hole at a depth of 24 feet. 20 percent core recovery, RQD = 0.	

SHEET 1 OF 1 LEGEND ON PLATE A-2
THE STRATIFICATION LINES REPRESENT THE APPROXIMATE BOUNDARY BETWEEN SOIL TYPES AND THE TRANSITION MAY BE GRADUAL

LOG OF DRILL HOLE — DH-6

SF80016 Plate A-1.6 GTC

DRILLED April 21, 1980 WITH Rotary Wash
DIAMETER OF DRILL HOLE IN INCHES 3½
LOGGED BY M.R.

SURFACE ELEVATION IN FEET -7½ DATUM Mean Sea Level

GEOLOGICAL CLASSIFICATION DESCRIPTION	ELEVATION IN FEET	DEPTH IN FEET	ENGINEERING CLASSIFICATION AND DESCRIPTION	TEST DATA M — D/(RC) — O
BEACH SEDIMENTS (Qb)	-10, -15	5	SANDY GRAVEL (GW) with some silt and clay, sub-angular to sub-rounded, fragments of greenstone and chert. Increase in clay content with depth.	
FRANCISCAN FORMATION (KJbt)	-20, -25	10, 15	BASALT TUFF, highly weathered, extremely fractured. Slightly weathered.	
		20, 25, 30, 35	Bottom of drill hole at a depth of 18 feet. 1 percent core recovery from 12 to 18 feet.	

SHEET 1 OF 1 LEGEND ON PLATE A-2
THE STRATIFICATION LINES REPRESENT THE APPROXIMATE BOUNDARY BETWEEN SOIL TYPES AND THE TRANSITION MAY BE GRADUAL

LOG OF DRILL HOLE — DH-7

SF80016 Plate A-1.7 GTC

DRILLED April 21, 1980 WITH Rotary Wash
DIAMETER OF DRILL HOLE IN INCHES 3½
LOGGED BY M.R.

SURFACE ELEVATION IN FEET -5½ DATUM Mean Sea Level

GEOLOGICAL CLASSIFICATION DESCRIPTION	ELEVATION IN FEET	DEPTH IN FEET	ENGINEERING CLASSIFICATION AND DESCRIPTION	TEST DATA M — D/(RC) — O
BEACH SEDIMENTS (Qb)	-10	5	SANDY GRAVEL (GW) with some silt and clay.	
FRANCISCAN FORMATION			BASALT TUFF or GREENSTONE, weathered.	
		10, 15, 20, 25, 30, 35	Bottom of drill hole at 5½ feet.	

SHEET 1 OF 1 LEGEND ON PLATE A-2
THE STRATIFICATION LINES REPRESENT THE APPROXIMATE BOUNDARY BETWEEN SOIL TYPES AND THE TRANSITION MAY BE GRADUAL

LOG OF DRILL HOLE — DH-8

SF80016 Plate A-1.8 GTC

DRILLED April 22, 1980 WITH Rotary Wash
DIAMETER OF DRILL HOLE IN INCHES 3½
LOGGED BY M.R.

SURFACE ELEVATION IN FEET -3 DATUM Mean Sea Level

GEOLOGICAL CLASSIFICATION DESCRIPTION	ELEVATION IN FEET	DEPTH IN FEET	ENGINEERING CLASSIFICATION AND DESCRIPTION	TEST DATA M — D/(RC) — O
BEACH SEDIMENTS (Qb)	-5	5	SANDY GRAVEL (GW)	
FRANCISCAN FORMATION (KJbt)			BASALT TUFF, weathered.	
		10, 15, 20, 25, 30, 35	Bottom of drill hole at 6 feet.	

SHEET 1 OF 1 LEGEND ON PLATE A-2
THE STRATIFICATION LINES REPRESENT THE APPROXIMATE BOUNDARY BETWEEN SOIL TYPES AND THE TRANSITION MAY BE GRADUAL

LOG OF DRILL HOLE — DH-9

SF80016 Plate A-1.9 GTC

DRILLED April 23, 1980 WITH Rotary Wash
DIAMETER OF DRILL HOLE IN INCHES 3½
LOGGED BY S.G.M.

SURFACE ELEVATION IN FEET -29 DATUM Mean Sea Level

GEOLOGICAL CLASSIFICATION DESCRIPTION	ELEVATION IN FEET	DEPTH IN FEET	ENGINEERING CLASSIFICATION AND DESCRIPTION	TEST DATA M — D/(RC) — O
MARINE ALLUVIUM (Qal)	-30, -35	5	CLAYEY GRAVEL (CL-GW) with sand, shell fragments. High sand content. High gravel and shell content.	
"Younger Bay Mud Deposits"	-40, -45, -50	10, 15, 20, 25	CLAY (CH), gray, plastic, shell fragments.	AL(64/34)
		30, 35	Bottom of drill hole at 25 feet.	

SHEET 1 OF 1 LEGEND ON PLATE A-2
THE STRATIFICATION LINES REPRESENT THE APPROXIMATE BOUNDARY BETWEEN SOIL TYPES AND THE TRANSITION MAY BE GRADUAL

LOG OF DRILL HOLE — DH-10

SF80016 Plate A-1.10 GTC

DRILLED April 23, 1980 WITH Rotary Wash
DIAMETER OF DRILL HOLE IN INCHES 3½
LOGGED BY S.G.M.

SURFACE ELEVATION IN FEET -1 DATUM Mean Sea Level

GEOLOGICAL CLASSIFICATION DESCRIPTION	ELEVATION IN FEET	DEPTH IN FEET	ENGINEERING CLASSIFICATION AND DESCRIPTION	TEST DATA M — D/(RC) — O
BEACH SEDIMENTS (Qb)			SANDY GRAVEL (GW) with silt and clay.	
FRANCISCAN FORMATION (KJg)	-5	5	GREENSTONE, red-brown, weathered. Fresh.	
		10, 15, 20, 25, 30, 35	Bottom of drill hole at 6½ feet.	

SHEET 1 OF 1 LEGEND ON PLATE A-2
THE STRATIFICATION LINES REPRESENT THE APPROXIMATE BOUNDARY BETWEEN SOIL TYPES AND THE TRANSITION MAY BE GRADUAL

LOG OF DRILL HOLE — DH-11

SF80016 Plate A-1.11 GTC

DRILLED April 24, 1980 WITH Rotary Wash
DIAMETER OF DRILL HOLE IN INCHES 3½
LOGGED BY S.G.M.

SURFACE ELEVATION IN FEET 0 DATUM Mean Sea Level

GEOLOGICAL CLASSIFICATION DESCRIPTION	ELEVATION IN FEET	DEPTH IN FEET	ENGINEERING CLASSIFICATION AND DESCRIPTION	TEST DATA M — D/(RC) — O
BEACH SEDIMENTS (Qb)	-5	5	SANDY GRAVEL (GW) Increase in clay.	
FRANCISCAN FORMATION (KJbt)	-10, -15, -20	10, 15, 20	BASALT TUFF, weathered. Slightly weathered. Fresh.	
(KJg)			GREENSTONE, green-black, moderately fractured.	
		25, 30, 35	Bottom of drill hole at 22 feet. Core recovery 100 percent from 20½ to 22 feet.	

SHEET 1 OF 1 LEGEND ON PLATE A-2
THE STRATIFICATION LINES REPRESENT THE APPROXIMATE BOUNDARY BETWEEN SOIL TYPES AND THE TRANSITION MAY BE GRADUAL

LOG OF DRILL HOLE — DH-12

SF80016 Plate A-1.12 GTC

DRILLED April 25, 1980 WITH Rotary Wash
DIAMETER OF DRILL HOLE IN INCHES 3½
LOGGED BY T.H.

SURFACE ELEVATION IN FEET -1 DATUM Mean Sea Level

GEOLOGICAL CLASSIFICATION DESCRIPTION	ELEVATION IN FEET	DEPTH IN FEET	ENGINEERING CLASSIFICATION AND DESCRIPTION	TEST DATA M — D/(RC) — O
BEACH SEDIMENTS (Qb)	-5	5	SANDY GRAVEL (GM-GW) with silt, vari-colored. Layers of SILTY CLAY (ML), blue-gray to olive.	
FRANCISCAN FORMATION (KJbt)	-10, -15, -20	10, 15, 20	BASALT TUFF, red-brown, iron-oxide stained, weathered. Slightly weathered. Fresh.	12-136
		25, 30, 35	Bottom of drill hole at 20 feet.	

SHEET 1 OF 1 LEGEND ON PLATE A-2
THE STRATIFICATION LINES REPRESENT THE APPROXIMATE BOUNDARY BETWEEN SOIL TYPES AND THE TRANSITION MAY BE GRADUAL

LOG OF DRILL HOLE — DH-13

SF80016 Plate A-1.13 GTC

DRILLED April 28, 1980 WITH Rotary Wash
DIAMETER OF DRILL HOLE IN INCHES 3½
LOGGED BY T.H.

SURFACE ELEVATION IN FEET -½ DATUM Mean Sea Level

GEOLOGICAL CLASSIFICATION DESCRIPTION	ELEVATION IN FEET	DEPTH IN FEET	ENGINEERING CLASSIFICATION AND DESCRIPTION	TEST DATA M — D/(RC) — O
BEACH SEDIMENTS (Qb)	-5	5	GRAVELLY SAND (SP) with silt, gray-brown, fine to coarse grained, medium dense, some cobbles.	
FRANCISCAN FORMATION (KJu)	-10, -15	10, 15	MELANGE, blue-gray, dense, fractured, weathered.	GS
		20, 25, 30, 35	Bottom of drill hole at 16 feet.	

SHEET 1 OF 1 LEGEND ON PLATE A-2
THE STRATIFICATION LINES REPRESENT THE APPROXIMATE BOUNDARY BETWEEN SOIL TYPES AND THE TRANSITION MAY BE GRADUAL

LOG OF DRILL HOLE — DH-14

SFSF80016 Plate A-1.14 GTC

DRILLED April 19, 1980 WITH Rotary Wash
DIAMETER OF DRILL HOLE IN INCHES 4½
LOGGED BY M.R.
(Adjacent to Main St. Pump Station)

SURFACE ELEVATION IN FEET 7½ DATUM Mean Sea Level

GEOLOGICAL CLASSIFICATION DESCRIPTION	ELEVATION IN FEET	DEPTH IN FEET	ENGINEERING CLASSIFICATION AND DESCRIPTION	TEST DATA M — D/(RC) — O
ARTIFICIAL FILL (af)	5, 0, -5	5, 10	SANDY GRAVEL (GW) with clay; greenstone, chert, and sandstone cobbles to 4 inches. CLAYEY GRAVEL (GC). SANDY GRAVEL (GW), gravel to one inch in diameter. Some organics (wood fragments).	GS
ALLUVIUM (Qal)	-10, -15, -20	15, 20, 25, 30	SANDY GRAVEL (GC-GW) with clay, gravel to 2 inches. Decreasing clay content.	
		35	Bottom of drill hole at 30 feet.	

SHEET 1 OF 1 LEGEND ON PLATE A-2
THE STRATIFICATION LINES REPRESENT THE APPROXIMATE BOUNDARY BETWEEN SOIL TYPES AND THE TRANSITION MAY BE GRADUAL

LEGEND TO LOGS

SF80016 Plate A-2 GTC

GEOLOGICAL CLASSIFICATION DESCRIPTION	ENGINEERING CLASSIFICATION AND DESCRIPTION	TEST DATA M — D/(RC) — O
CONVENTIONAL TERMINOLOGY	SOIL - UNIFIED SOIL CLASSIFICATION SYSTEM WITH LETTER SYMBOL IN PARENTHESIS. ROCK - CONVENTIONAL TERMINOLOGY WITH (R) FOR ROCK	MOISTURE CONTENT — PERCENT OF DRY WEIGHT. S INDICATES COMPLETE SATURATION

SYMBOLS

- WATER LEVEL
- WATER SEEPAGE
- HEAVY CAVING
- LIGHT CAVING
- SAMPLES AND CORES
  - UNDISTURBED
  - DISTURBED
  - UNSUCCESSFUL SAMPLING ATTEMPT
  - CORING RUN
- P — PUSH
- 7 — BLOW COUNT FOR 12 INCH SAMPLER PENETRATION (O.D. = 3.2 INCHES, 12 INCH DROP) ___ LBS (DRIVING WEIGHTS)

GEOLOGIC STRUCTURE

STRIKE AND DIP:
- B N 75 W 50 S (B = BEDDING)
- CN 15E 75W (C = CONTACT)
- J N 45W 85E (J = JOINT)
- S N30E 45W (S = SHEAR)
- F N 15E 20W (F = FOLIATION)

TEST DATA M — D/(RC) — O:
- DRY DENSITY — POUNDS PER CUBIC FOOT
- OTHER TESTS PERFORMED
  - DS = DIRECT SHEAR TEST
  - UC = UNCONFINED COMPRESSION TEST
  - TC = TRIAXIAL COMPRESSION TEST
  - CN = CONSOLIDATION TEST
  - EX = EXPANSION TEST
  - CP = COMPACTION TEST
  - GS = GRAIN SIZE DETERMINATION
  - PM = PERMEABILITY TEST
  - SE = SAND EQUIVALENT DETERMINATION
  - AL (45/10) = ATTERBERG LIMITS (LIQUID LIMIT/PLASTICITY INDEX)
- RELATIVE COMPACTION — PERCENT OF MAXIMUM DRY DENSITY OBTAINED BY LABORATORY COMPACTION TEST ON REPRESENTATIVE SAMPLE

SYMBOLS FOR EARTH MATERIALS

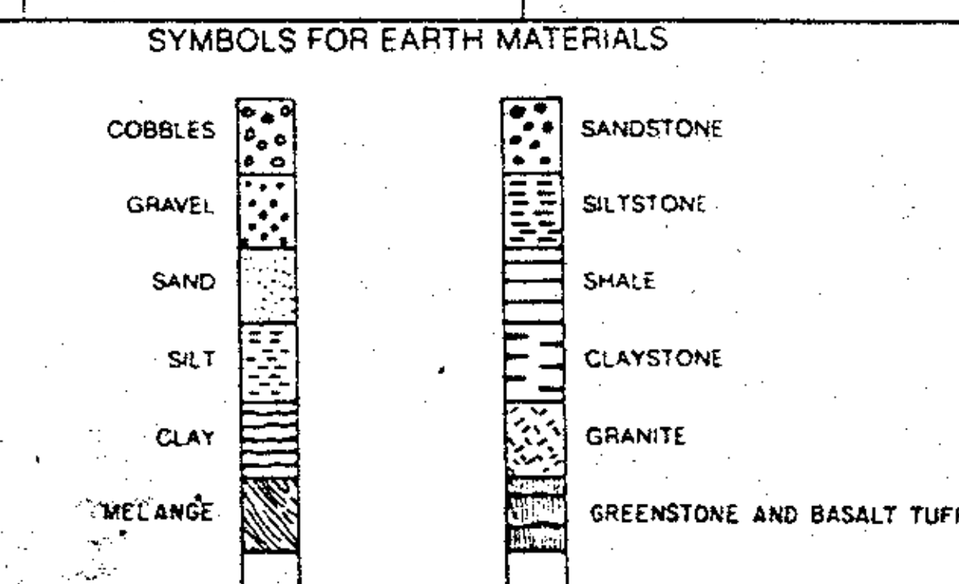

Record Drawing

These record drawings have been prepared, in part, on the basis of information compiled and furnished by others. Kennedy/Jenks/Chilton is not responsible for any errors or omissions in this document as a result of information provided by others.
Dated 9-29, 19 88

RECORD DRAWING

Reference Information and Notes:

DATA ON THIS SHEET TAKEN FROM "GEOTECHNICAL INVESTIGATION - PROPOSED IMPROVEMENTS TO THE SAUSALITO-MARIN CITY SANITARY DISTRICT WATER RECLAMATION PLANT - JULY 1980" BY GEOTECHNICAL CONSULTANTS, INC., SAN FRANCISCO, CALIFORNIA. COPY AVAILABLE FOR REFERENCE AT THE SNA FRANCISCO OFFICE OF THE ENGINEER.

Revised	Description	Submit.	Appr'd.	Date

Refer to Tracing for Latest Revision

Designed JHF
Drawn JHF
Checked JHF
Date 1-29-81

Wastewater Plant Improvements C-06-2464
Sausalito - Marin City Sanitary District

Kennedy/Jenks Engineers San Francisco
Submitted: Walter F. [signature] C 9370
Approved: Robert J. [signature]

SOILS BORINGS

Scale NONE
Job No. 0112
Sheet G-9

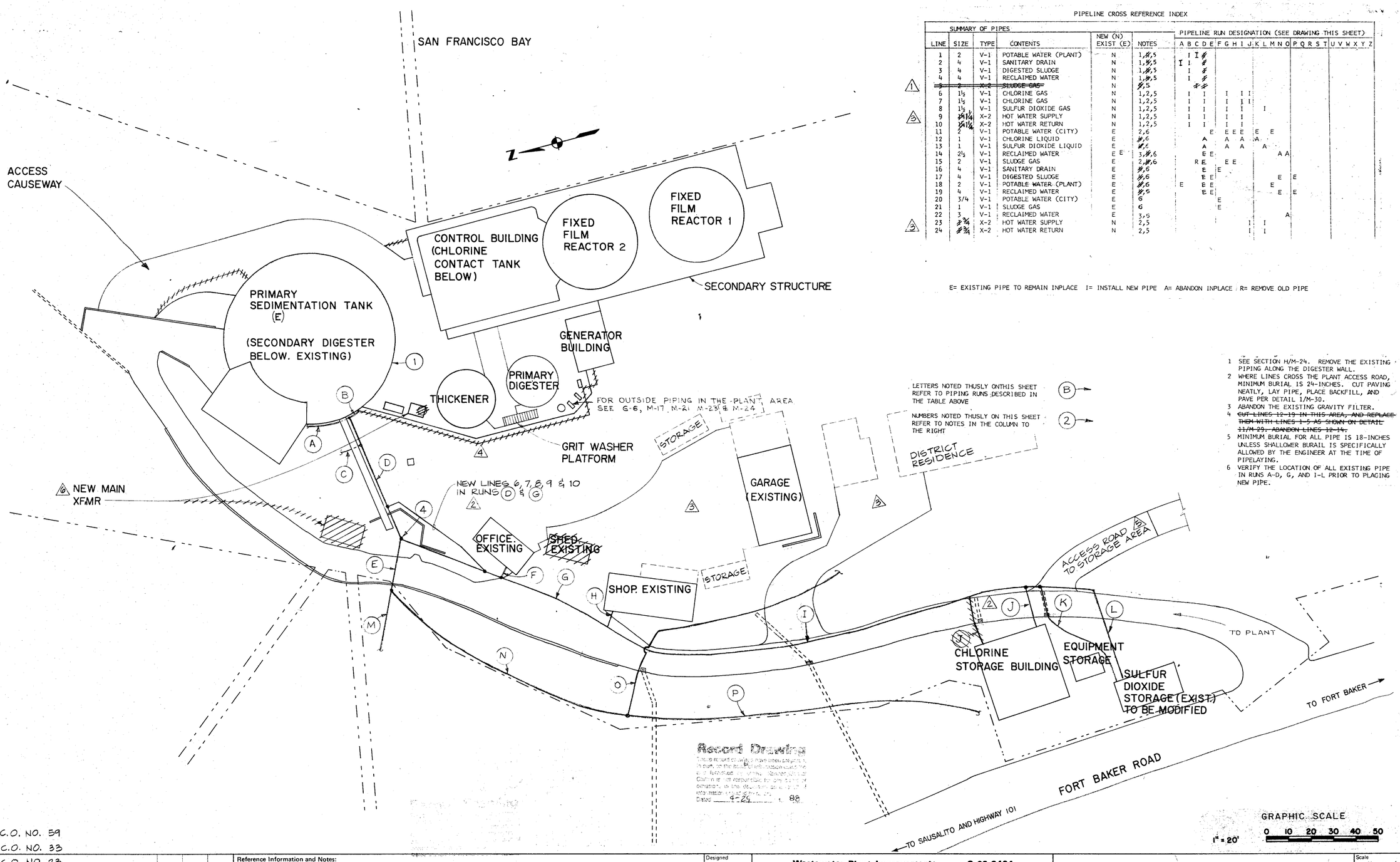

PIPELINE CROSS REFERENCE INDEX

	SUMMARY OF PIPES				NEW (N) EXIST (E)	NOTES	PIPELINE RUN DESIGNATION (SEE DRAWING THIS SHEET) A B C D E F G H I J K L M N O P Q R S T U V W X Y Z
	1	2	V-1	POTABLE WATER (PLANT)	N	1,5,6	I I I
	2	4	V-1	SANITARY DRAIN	N	1,5,6	I I I
	3	4	V-1	DIGESTED SLUDGE	N	1,5,6	I I
	4	4	V-1	RECLAIMED WATER	N	1,5,6	I I
1	~~5~~	~~2~~	~~X-2~~	~~SLUDGE GAS~~	N	5,5	
	6	1½	V-1	CHLORINE GAS	N	1,2,5	I I I I
	7	1½	V-1	CHLORINE GAS	N	1,2,5	I I I I
	8	1½	V-1	SULFUR DIOXIDE GAS	N	1,2,5	I I I I I
2	9	~~1~~ 1¼	X-2	HOT WATER SUPPLY	N	1,2,5	I I I I
	10	~~1~~ 1½	X-2	HOT WATER RETURN	N	1,2,5	I I I I
	11	2	V-1	POTABLE WATER (CITY)	E	2,6	E E E E E
	12	1	V-1	CHLORINE LIQUID	E	5,6	A A A A
	13	1	V-1	SULFUR DIOXIDE LIQUID	E	5,6	A A A A
	14	2½	V-1	RECLAIMED WATER	E E	3,5,6	E E A A
	15	2	V-1	SLUDGE GAS	E	2,5,6	R E E E
	16	4	V-1	SANITARY DRAIN	E	5,6	E E
	17	4	V-1	DIGESTED SLUDGE	E	5,6	E E E E
	18	2	V-1	POTABLE ~~WATER~~ (PLANT)	E	5,6	E E E E E
	19	4	V-1	RECLAIMED WATER	E	5,6	E E E E
	20	3/4	V-1	POTABLE WATER (CITY)	E	6	E
	21	1	V-1	SLUDGE GAS	E	6	E
	22	3	V-1	RECLAIMED WATER	E	3,5	A
3	23	~~3~~ ¾	X-2	HOT WATER SUPPLY	N	2,5	I I
	24	~~3~~ ¾	X-2	HOT WATER RETURN	N	2,5	I I

E= EXISTING PIPE TO REMAIN INPLACE I= INSTALL NEW PIPE A= ABANDON INPLACE R= REMOVE OLD PIPE

LETTERS NOTED THUSLY ONTHIS SHEET REFER TO PIPING RUNS DESCRIBED IN THE TABLE ABOVE (B)

NUMBERS NOTED THUSLY ON THIS SHEET REFER TO NOTES IN THE COLUMN TO THE RIGHT (2)

1 SEE SECTION H/M-24. REMOVE THE EXISTING PIPING ALONG THE DIGESTER WALL.
2 WHERE LINES CROSS THE PLANT ACCESS ROAD, MINIMUM BURIAL IS 24-INCHES. CUT PAVING NEATLY, LAY PIPE, PLACE BACKFILL, AND PAVE PER DETAIL 1/M-30.
3 ABANDON THE EXISTING GRAVITY FILTER.
4 ~~CUT LINES 12-13 IN THIS AREA, AND REPLACE THEM WITH LINES 1-5 AS SHOWN ON DETAIL 11/M-29, ABANDON LINES 12-13.~~
5 MINIMUM BURIAL FOR ALL PIPE IS 18-INCHES UNLESS SHALLOWER BURAIL IS SPECIFICALLY ALLOWED BY THE ENGINEER AT THE TIME OF PIPELAYING.
6 VERIFY THE LOCATION OF ALL EXISTING PIPE IN RUNS A-D, G, AND I-L PRIOR TO PLACING NEW PIPE.

6 C.O. NO. 59
5 C.O. NO. 33
4 C.O. NO. 23
3 CLARIFICATION
2 FIELD CHANGE
1 CO NO. 35

Revised	Description	Submit.	Appr'd.	Date

Refer to Tracing for Latest Revision

Reference Information and Notes:

REFER TO THE NOTE WITH THIS NUMBER (1)

Designed JHF
Drawn JHF
Checked JHF
Date 1-29-81

Wastewater Plant Improvements C-06-2464
Sausalito - Marin City Sanitary District

Kennedy/Jenks Engineers San Francisco
Submitted: Walter Hamman C 9370 Approved: Robert J. Avery

OUTSIDE PIPING

Scale 1" = 20'
Job No. 0112
Sheet M-1 of

25. 12" X 12" VENT OPENING. SEE DETAILS 4/2|15 AND 5/2|15

18. 7-2½" DIAMETER OPENINGS IN BOTTOM OF 10" DIAMETER ROUND DUCT. (4 DUCTS PER REACTOR).
19. FIXED FILM REACTOR 1 (SECTIONAL PLAN @ EL. 123.0) FIBERGLASS BEAMS & AIR SYSTEM ARE SYMMETRICAL ABOUT CENTERLINE. SPLIT PLAN SHOWN FOR CLARITY.
20. 5-2½" DIAMETER OPENINGS IN BOTTOM OF 10" DIAMETER ROUND (4 DUCTS PER REACTOR).
21. PROVIDE DUCTWORK SIMILAR (BUT OPPOSITE HAND) TO THAT SHOWN FOR FIXED FILM REACTOR NO. 1.
22. CAL/OSHA GUARD (TYP. AT ALL DRIVES).
23. SEE COLLECTOR MANUFACTURER'S DWGS. FOR SIZE OF OPENING AND RECESS. RECESS NOT TO EXCEED 5-1/2".
24. ½" TV-1P FROM AIR RECEIVER TO BUBBLER PANEL 1. SEE ELECTRICAL DWGS.

11. GRATING (SEE SPECS.) FOR OPENING DIMENSIONS, SEE STRUCTURAL DWGS.
12. 2-2-1/2" DIAMETER OPENINGS IN BOTTOM OF 8" DIAMETER DUCT (4 DUCTS PER REACTOR).
13. 10" DIAMETER DUCT, LENGTH AS SHOWN (12 PER REACTOR).
14. 6" DIAMETER DUCT (16 DUCTS PER REACTOR), 2½" DIAMETER OPENING IN BOTTOM OF EACH.
15. FOR TYPICAL BRANCH DUCT SUPPORT. SEE DETAIL 2/M-33
16. 1/4" X 4" X 4" X 6" LONG PVC ANGLES CONTINUOUS WELDED TO DUCT AND BOLT TO CONCRETE BEAM W/1/4" DIAMETER S.S. BOLTS. 4 PER DUCT MAIN.
17. DUCTWORK IN THIS AREA SIMILAR BUT MIRROR IMAGE TO THAT SHOWN FOR EASTERN HALF OF FIXED FILM REACTOR (ABOVE).

1. 2'-6" X 3'-0" HATCH. (SEE SPECS).
2. 14" X 30" DUCT MAIN. FULL LENGTH OF REACTOR (TWO PER REACTOR).
3. AIR TIGHT CAP (TYP.).
4. FIBERGLASS BEAMS, SEE STRUCTURAL DWGS.
5. FIBERGLASS BEAMS, SUPPORT ALL ROUND PVC DUCT FROM BEAM. SEE DETAIL 2/M-33
6. 7-2½" DIAMETER OPENINGS IN BOTTOM OF 10" DIAMETER ROUND DUCT (4 DUCTS PER REACTOR).
7. DUCT THRU CONCRETE WALL. SEE DETAIL 5/M-33
8. SEE DETAIL 7/M-33
9. AIR DISCHARGE OPENING IN BOTTOM OF 10" DIAMETER DUCT 2'-0" O.C. TYP.
10. 14" X 18" DEEP DUCT DROP (16 PER REACTOR).

Record Drawing
These record drawings have been prepared, in part, on the basis of information compiled and furnished by others. KennedyJenks/Chilton is not responsible for any errors or omissions in this document as a result of information provided by others.
Dated 4-29, 19 88

Record Drawing
These record drawings have been prepared, in part, on the basis of information compiled and furnished by others. KennedyJenks/Chilton is not responsible for any errors or omissions in this document as a result of information provided by others.
Date _____, 19 __

RECORD DRAWING

GRAPHIC SCALE

Revised	Description	Submit.	Appr'd.	Date
2	CO NO. 28			
1	FIELD CHANGE			

Refer to Tracing for Latest Revision

Reference Information and Notes:

1/4" = 1'-0" 0 5 10

FOR TYPICAL EQUIPMENT ANCHORAGE SEE SHEET M-24

REFER TO THE NOTE WITH THIS NUMBER

Designed J.A.F.
Drawn A.M.
Checked JHF
Date 1-29-81

Wastewater Plant Improvements C-06-2464
Sausalito - Marin City Sanitary District

KennedyJenks Engineers San Francisco

Submitted: Approved:

SECONDARY STRUCTURE TOP PLAN

Scale 1/4"=1'-0"
Job No. 0112
Sheet M-2 of

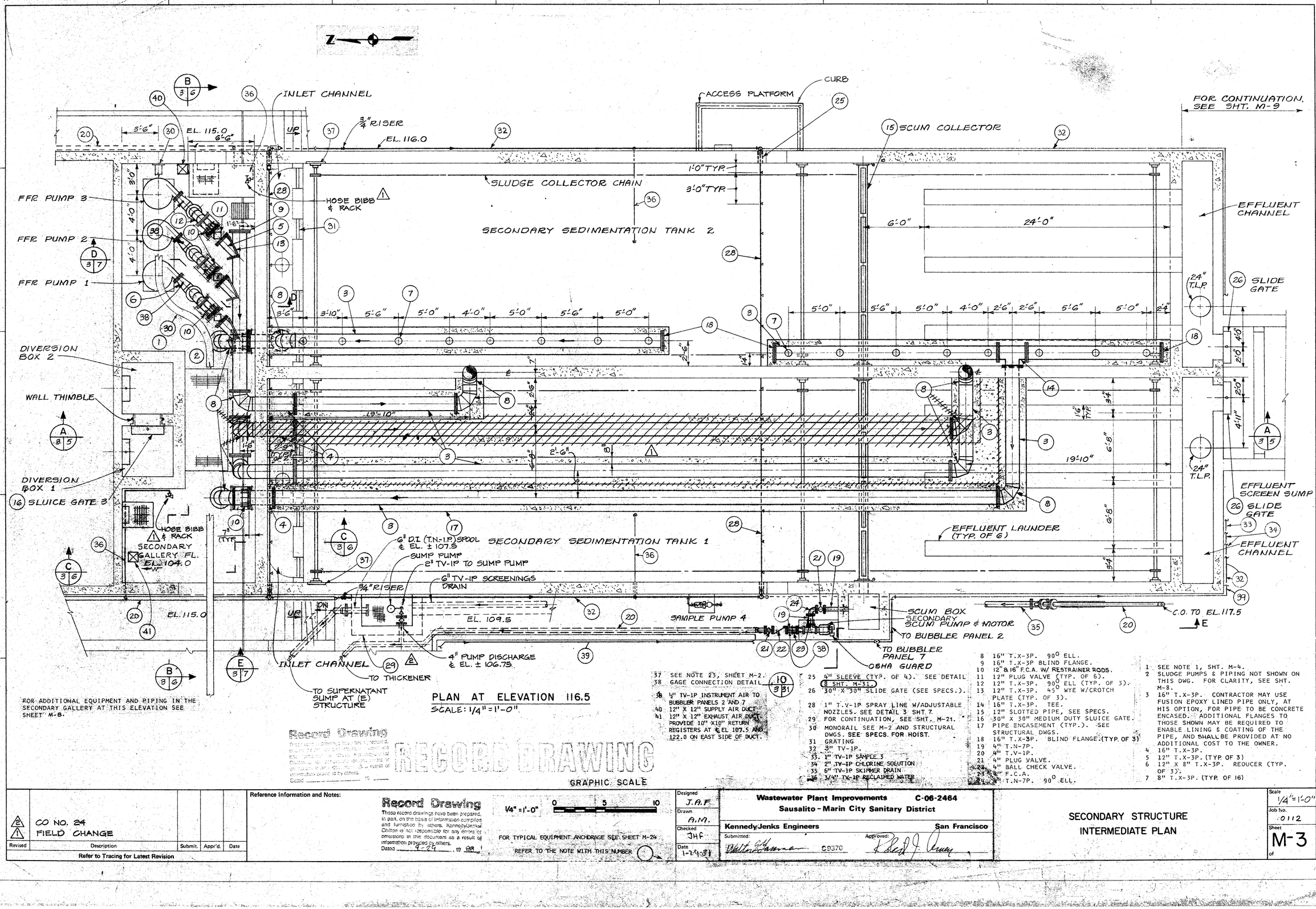

37 SEE NOTE 23, SHEET M-2.
38 GAGE CONNECTION DETAIL 10/3|31
39 1/2" TV-IP INSTRUMENT AIR TO BUBBLER PANELS 2 AND 7
40 12" X 12" SUPPLY AIR DUCT
41 12" X 12" EXHAUST AIR DUCT. PROVIDE 10" X10" RETURN REGISTERS AT ℄ EL 107.5 AND 122.0 ON EAST SIDE OF DUCT.

25 4" SLEEVE (TYP. OF 4). SEE DETAIL 8 SHT. M-31.
26 30" X 30" SLIDE GATE (SEE SPECS.).
28 1" T.V-IP SPRAY LINE W/ADJUSTABLE NOZZLES. SEE DETAIL 3 SHT. 7.
29 FOR CONTINUATION, SEE SHT. M-21.
30 MONORAIL SEE M-2 AND STRUCTURAL DWGS. SEE SPECS. FOR HOIST.
31 GRATING
32 3" TV-IP.
33 1" TV-IP SAMPLE 3
34 2" TV-IP CHLORINE SOLUTION
35 6" TV-IP SKIMMER DRAIN
36 3/4" TV-IP RECLAIMED WATER

8 16" T.X-3P. 90° ELL.
9 16" T.X-3P BLIND FLANGE.
10 12" & 16" F.C.A. W/ RESTRAINER RODS.
11 12" PLUG VALVE (TYP. OF 6).
12 12" T.X-3P. 90° ELL (TYP. OF 3).
13 12" T.X-3P. 45° WYE W/CROTCH PLATE (TYP. OF 3).
14 16" T.X-3P. TEE.
15 12" SLOTTED PIPE, SEE SPECS.
16 30" X 30" MEDIUM DUTY SLUICE GATE.
17 PIPE ENCASEMENT (TYP.). SEE STRUCTURAL DWGS.
18 16" T.X-3P. BLIND FLANGE. (TYP. OF 3)
19 4" T.N-7P.
20 4" T.V-1P.
21 4" PLUG VALVE.
23 4" BALL CHECK VALVE.
24 4" F.C.A.
4" T.N-7P. 90° ELL.

1. SEE NOTE 1, SHT. M-4.
2. SLUDGE PUMPS & PIPING NOT SHOWN ON THIS DWG. FOR CLARITY, SEE SHT. M-8.
3. 16" T.X-3P. CONTRACTOR MAY USE FUSION EPOXY LINED PIPE ONLY, AT HIS OPTION, FOR PIPE TO BE CONCRETE ENCASED. ADDITIONAL FLANGES TO THOSE SHOWN MAY BE REQUIRED TO ENABLE LINING & COATING OF THE PIPE, AND SHALL BE PROVIDED AT NO ADDITIONAL COST TO THE OWNER.
4. 16" T.X-3P.
5. 12" T.X-3P. (TYP. OF 3)
6. 12" X 8" T.X-3P. REDUCER (TYP. OF 3).
7. 8" T.X-3P. (TYP. OF 16)

Record Drawing
These record drawings have been prepared, in part, on the basis of information compiled and furnished by others. KennedyJenks/Chilton is not responsible for any errors or omissions in this document as a result of information provided by others.
Dated 4-29, 19 88

1/4" = 1'-0" 0 5 10

FOR TYPICAL EQUIPMENT ANCHORAGE SEE SHEET M-24
REFER TO THE NOTE WITH THIS NUMBER

Revised	Description	Submit.	Appr'd.	Date
2	CO NO. 24			
1	FIELD CHANGE			

Refer to Tracing for Latest Revision

Reference Information and Notes:

Designed J.A.F.
Drawn A.M.
Checked JHF
Date 1-29-81

Wastewater Plant Improvements C-06-2464
Sausalito - Marin City Sanitary District
Kennedy Jenks Engineers San Francisco
Submitted: Walter Hamma 29370 Approved: Robert J. Cruse

SECONDARY STRUCTURE INTERMEDIATE PLAN

Scale 1/4" = 1'-0"
Job No. 0112
Sheet M-3 of

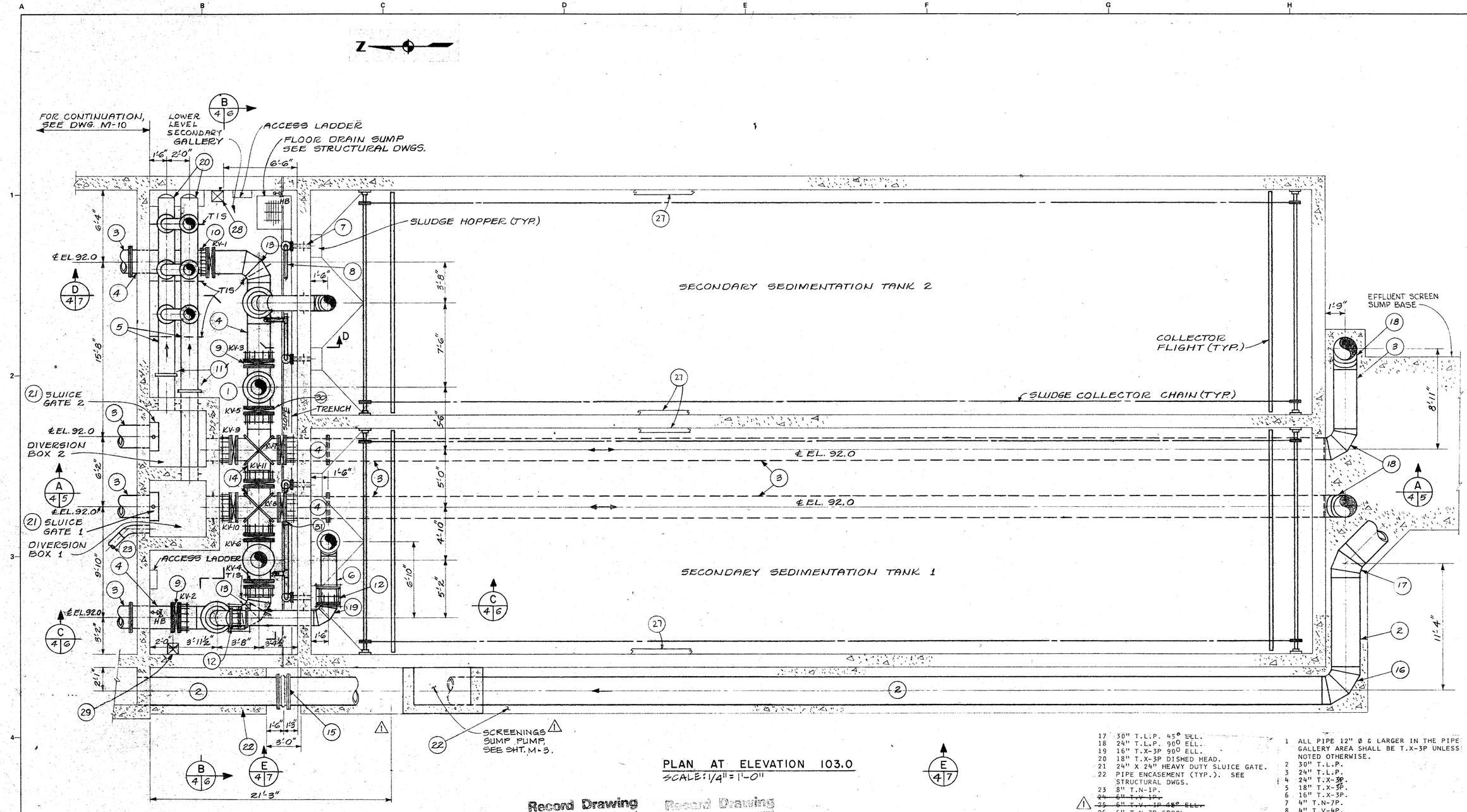

PLAN AT ELEVATION 103.0
SCALE: 1/4" = 1'-0"

17 30" T.L.P. 45° ELL.
18 24" T.L.P. 90° ELL.
19 16" T.X-3P 90° ELL.
20 18" T.X-3P DISHED HEAD.
21 24" X 24" HEAVY DUTY SLUICE GATE.
22 PIPE ENCASEMENT (TYP.). SEE STRUCTURAL DWGS.
23 8" T.N-1P.
~~24 6" T.V-1P.~~
~~25 6" T.V-1P 45° ELL.~~
~~26 6" T.N-7P SPOOL.~~
27 CONCRETE FILLET. SEE STRUCTURAL DWGS.
28 12" X 12" SUPPLY AIR DUCT.
29 12" X 12" EXHAUST AIR DUCT DOWN TO EL 91.0 W/10" X 10" RETURN REGISTER AT BOTTOM.

1 ALL PIPE 12" Ø & LARGER IN THE PIPE GALLERY AREA SHALL BE T.X-3P UNLESS NOTED OTHERWISE.
2 30" T.L.P.
3 24" T.L.P.
4 24" T.X-3P.
5 18" T.X-3P.
6 16" T.X-3P.
7 4" T.N-7P.
8 4" T.V-4P.
9 24" KNIFE GATE VALVE (TYP. OF 11).
10 24" F.C.A. (TYP. OF 11).
11 18" VICTAULIC COUPLING.
12 16" F.C.A. W/RESTRAINING RODS.
13 24" T.X-3P 90° ELL.
14 24" T.X-3P CROSS W/CROTCH PLATE.
15 30" RUBBER COUPLING
16 30" T.L.P. 90° ELL.

Record Drawing
These record drawings have been prepared, in part, on the basis of information compiled and furnished by others. Kennedy/Jenks/Chilton is not responsible for any errors or omissions in this document as a result of information provided by others.
Dated 9-29, 19 88

Record Drawing
These record drawings have been prepared, in part, on the basis of information compiled and furnished by others. Kennedy/Jenks/Chilton is not responsible for any errors or omissions in this document as a result of information provided by others.
Dated _____, 19 __

RECORD DRAWING

GRAPHIC SCALE

Revised	Description	Submit.	Appr'd.	Date
1	CO NO. 24			

Refer to Tracing for Latest Revision

Reference Information and Notes:
30. 24" KNIFE GATE VALVES KV-5, 6, 7 & 8 HAVE ELECTRIC OPERATORS. SEE SPECIFICATIONS.
31. 24" FCA'S FOR VALVES KV-7, 8, 9 & 10 SHALL BE DESIGNED TO FIT IN THE LIMITED SPACE AVAILABLE WITH SUFFICIENT CLEARANCE TO FACILITATE REMOVAL OF VALVE.

1/4" = 1'-0" 0 5 10

REFER TO THE NOTE WITH THIS NUMBER

Designed J.A.F.
Drawn A.M.
Checked JHF
Date 1-29-81

Wastewater Plant Improvements C-06-2464
Sausalito - Marin City Sanitary District
Kennedy/Jenks Engineers San Francisco
Submitted: Walter F. Gassman C9370
Approved: Robert J. Amey

SECONDARY STRUCTURE
BOTTOM PLAN

Scale 1/4" = 1'-0"
Job No. 0112
Sheet M-4 of

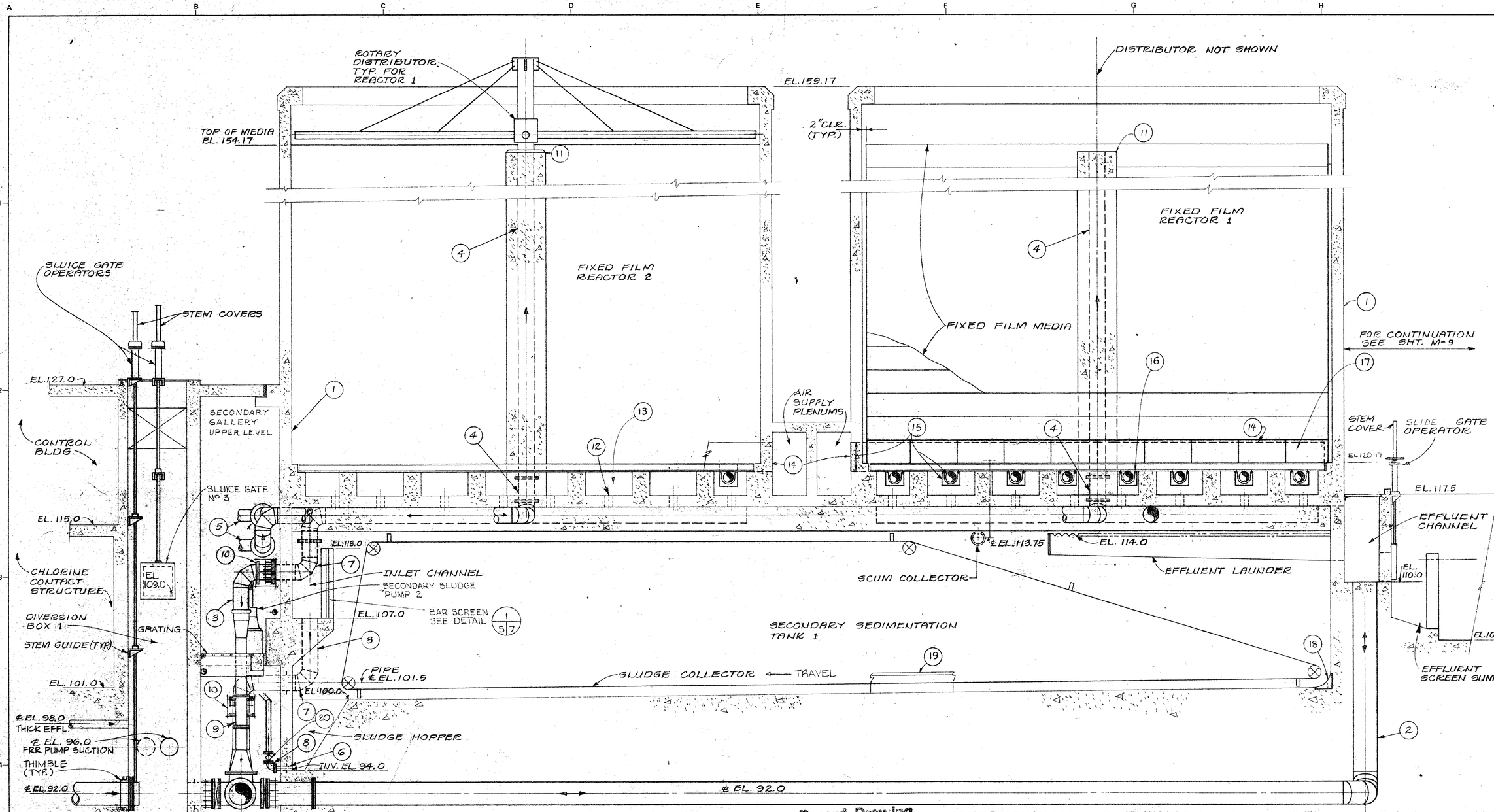

GRAPHIC SCALE

1/4" = 1'-0" 0 5 10

REFER TO THE NOTE WITH THIS NUMBER

Record Drawing

These record drawings have been prepared, in part, on the basis of information compiled and furnished by others. Kennedy/Jenks/Chilton is not responsible for any errors or omissions in this document as a result of information provided by others.

Dated 4-29 19 88

RECORD DRAWING

18 SWEEP IN GROUT W/MECHANISM.
19 CONCRETE FILLET. SEE STRUCTURAL DWGS.
20 4" PLUG VALVE.

11 MAKE CONNECTIONS PER DISTRIBUTOR MANUFACTURER'S RECOMMENDATIONS.
12 8" T.X-3P (TYP.).
13 FFR2 AIR DUCT SYSTEM NOT SHOWN. SEE FFR1.
14 30" X 14" DUCT.
15 REACTOR AIR DUCT SYSTEM.
16 SUPPORT ALL DUCTS FROM 8" BEAM 2'-0" O.C. SEE DETAIL 2/M-33
17 FOR DUCT SIZES, ETC. SEE M-2. FOR ISOMETRIC DIAGRAM SEE M-33

1 FIXED FILM REACTORS CUT AT CENTER-LINE ON THIS DWG. FOR CLARITY.
2 24" T.L.P.
3 16" T.X-3P.
4 16" T.X-3P. SEE NOTE 3, SHT. M-3.
5 12" T.X-3P FOR CONTINUATION. SEE SHT. M-3.
6 4" T.N-7P.
7 16" T.X-3P 90° ELL.
8 4" T.N-7P 90° ELL.
9 10" VENTURI FLOW METER. SEE SPECS.
10 16" F.C.A. W/ RESTRAINING RODS.

Revised	Description	Submit.	Appr'd.	Date

Refer to Tracing for Latest Revision

Reference Information and Notes:

Designed J.A.F.
Drawn A.M.
Checked JHF
Date 1-29-81

Wastewater Plant Improvements C-06-2464
Sausalito - Marin City Sanitary District

Kennedy/Jenks Engineers San Francisco

Submitted: Walter F. Gussman C9370 Approved: Robert J. Arnen

SECONDARY STRUCTURE
LONGITUDINAL SECTION

Scale 1/4" = 1'-0"
Job No.
Sheet M-5 of

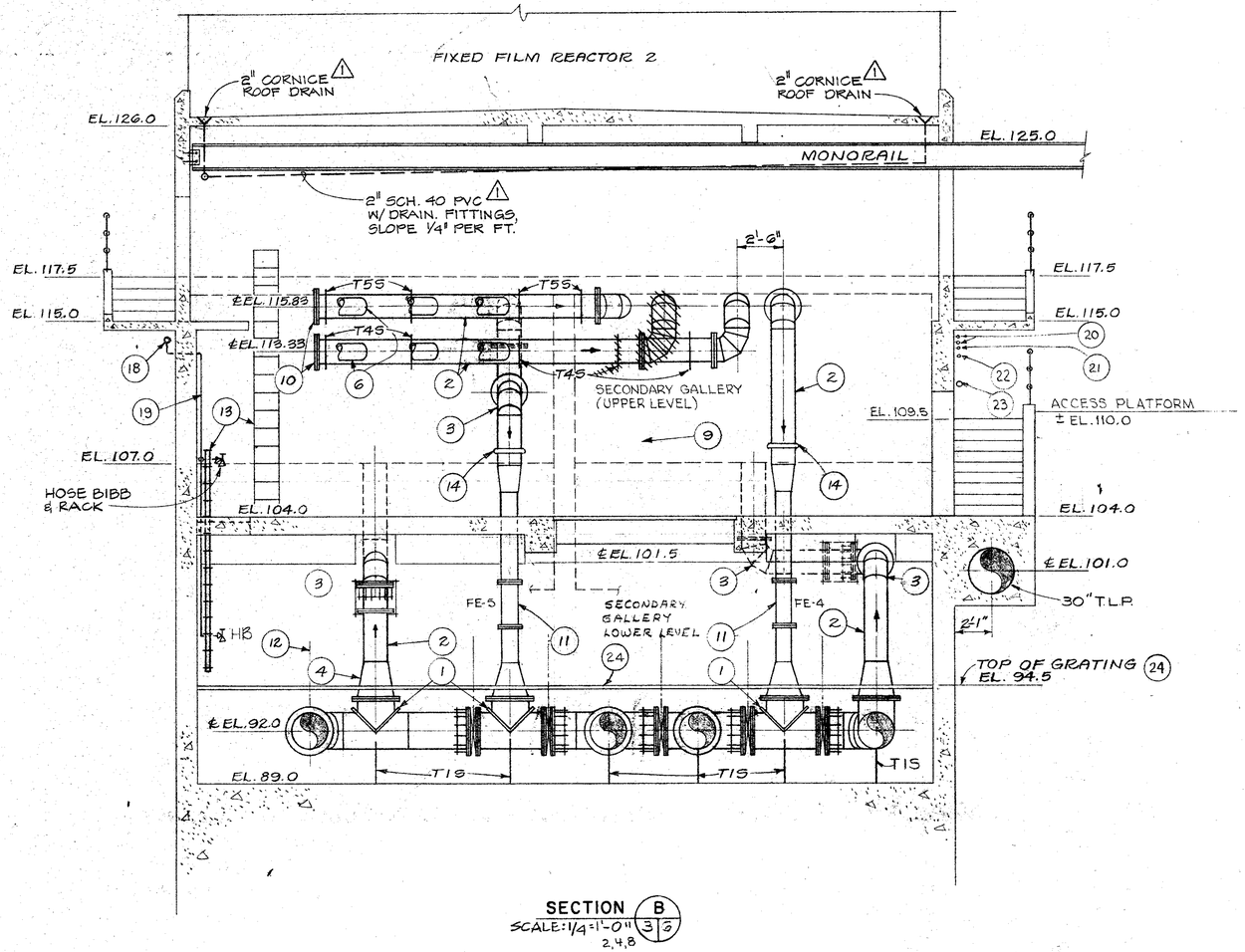

SECTION B
SCALE: 1/4"=1'-0" 3 6
2,4,8

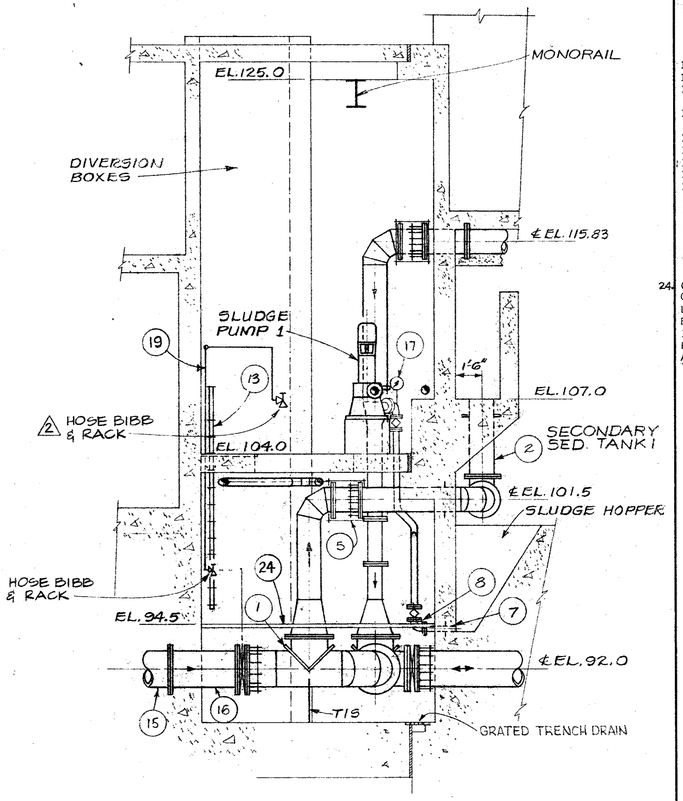

SECTION C
SCALE: 1/4"=1'-0" 3 6
4,8

1 24" T.X-3P TEE W/CROTCH PLATE.
2 16" T.X-3P.
3 16" T.X-3P 90° ELL.
4 24" X 16" T.X-3P REDUCER (TYP. OF 4).
5 16" F.C.A.
6 12" T.X-3P FOR CONTINUATION SEE SHT. M-3.
7 4" T.N-7P.
8 4" T.N-7P 90° ELL.
9 SLUDGE PUMPS NOT SHOWN. FOR CLARITY, SEE SHT. M-8.
10 16" T.X-3P. BLIND FLANGE.
11 10" VENTURI FLOW METER, SEE SPECS.
12 VALVE OPERATORS NOT SHOWN FOR CLARITY. (TYP. ALL 24" VALVES).
13 ACCESS LADDER. FOR DETAILS, SEE ARCH. DWGS.
14 16" VICTAULIC COUPLING.
15 24" T.L.P.
16 24" 7X-3P.
17 SEE DETAIL 10/M-31.
18 4" TV-1P RECLAIMED WATER ℄ 114.50.
19 3/4" TV-1P RECLAIMED WATER
20 2" TV-1P CHLORINE SOLUTION
21 1¼" TV-1P SAMPLE 4
22 1" TV-1P SAMPLE 3
23 4" TV-1P RECLAIMED WATER
24 CONTRACTOR SHALL SUPPLY & INSTALL GALV. STEEL GRATING & SUPPORT MEMBERS TO SUPPORT A LIVE LOAD OF 150 PSF WITH A DEFLECTION NOT TO EXCEED 1/4". CONTRACTOR SHALL ALSO SUPPLY & INSTALL GRATING SUPPORT MEMBERS AROUND THE PERIPHERY OF ALL OPENING IN THE GRATING WHICH ARE SQUARE OR RECTANGULAR IN SHAPE.

Record Drawing
Record Drawing

GRAPHIC SCALE
1/4" = 1'-0" 0 5 10

Revised	Description	Submit.	Appr'd.	Date
2	FIELD CHANGE			
1	CO NO. 28			

Refer to Tracing for Latest Revision

Reference Information and Notes:

FOR TYPICAL EQUIPMENT ANCHORAGE SEE SHEET M-24

REFER TO THE NOTE WITH THIS NUMBER

Designed J.A.F.
Drawn A.M.
Checked JHF
Date 1-29-81

Wastewater Plant Improvements C-06-2464
Sausalito - Marin City Sanitary District
Kennedy/Jenks Engineers San Francisco
Submitted: Walter F. Gassman
Approved: Robert J. Amey

PIPE GALLERY
SECTIONS

Scale 1/4"=1'-0"
Job No. 0112
Sheet M-6
of

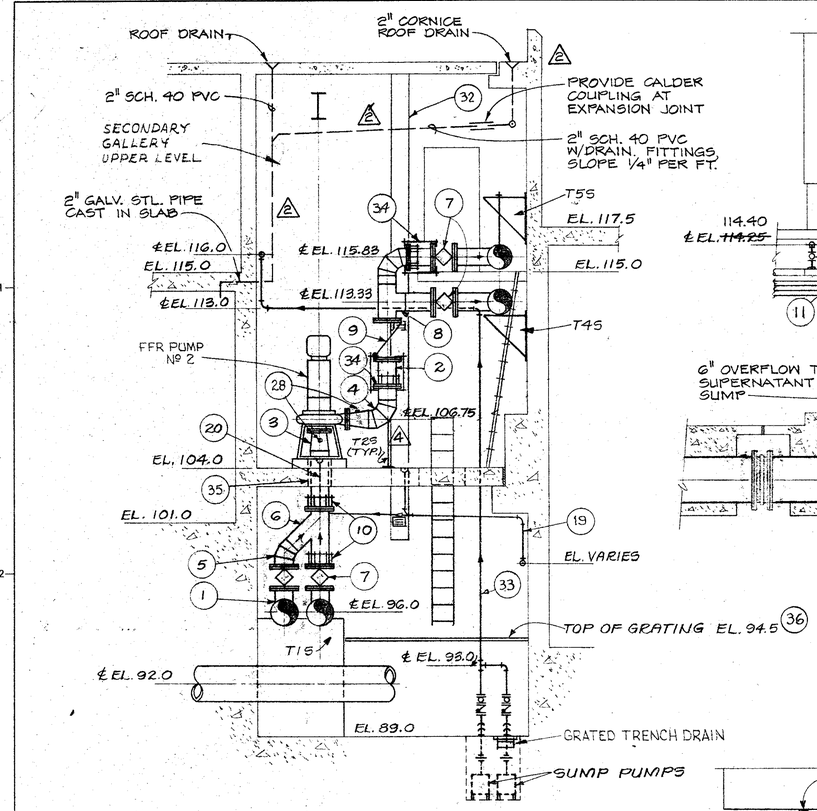

SECTION D
4,8 | 3 | 7
SCALE: 1/4" = 1'-0"

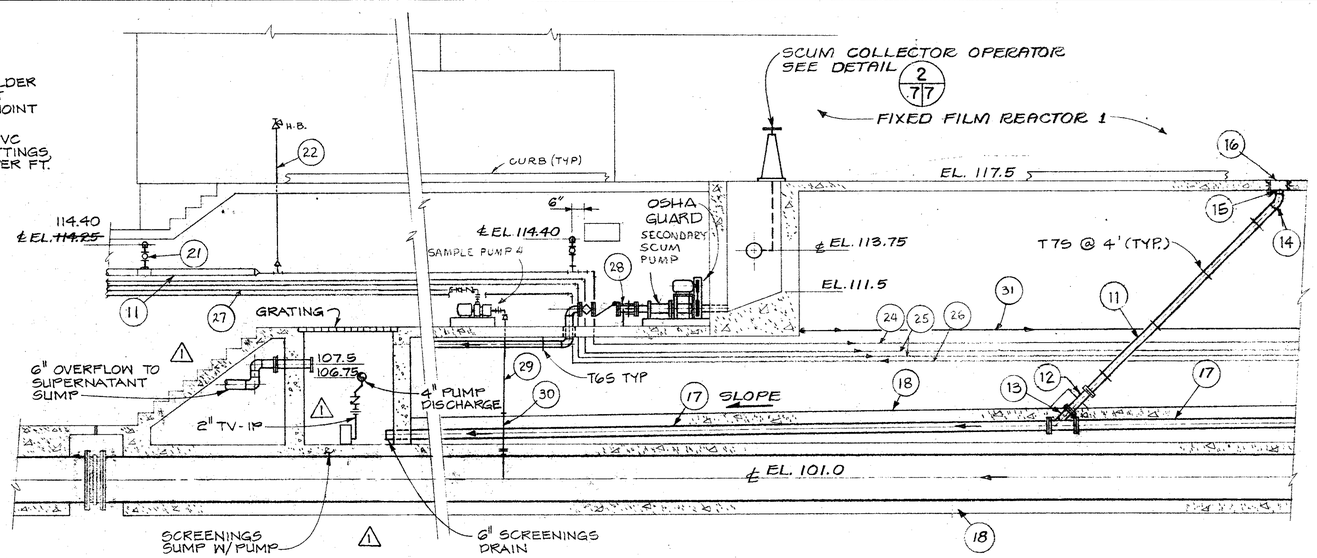

SECTION E
2,4 | 3 | 7
SCALE: 1/4" = 1'-0"

1 18" X 18" X 12" TEE W/CROCTCH PLATE (TYP. OF 2).
2 12" T.X-3P.
3 12" X 10" T.X-3P REDUCER.
4 12" T.X-3P 90° ELL.
5 12" T.X-3P 45° ELL.
6 12" T.X-3P 45° LATERAL.
7 12" PLUG VALVE (TYP. OF 2).
8 12" T.X-3P TEE.
9 12" BALL CHECK VALVE.
10 12" F.C.A.
11 4" T.V-1P.
12 4" X 18" T.N-7P SPOOL.
13 6" X 6" X 4" T.N-7P LATERAL.
14 4" T.V-1P 45° ELL.
15 4" T.V-1P SXT NIPPLE.
16 4" CLEANOUT W/COVER.
17 6" T.V-1P.
18 PIPE ENCASEMENT (TYP.). SEE STRUCTURAL DWGS.
19 3" T.N-4P.
20 2" T.N-4P.
21 1" PVC TRUE UNION BALL VALVE (TYP. OF 2).
22 3/4" TV-1P
23
24 3" TV-1P RECLAIMED WATER
25 2" TV-1P CHLORINE SOLUTION
26 1" TV-1P SAMPLE 3
27 1½" TV-1P SAMPLE 4
28 GAGE CONNECTION DETAIL 1C | 3 | 31
29 2" TV-1P SAMPLE 3
30 2" TX-3P SAMPLE 3
31 ½" TV-1P INSTRUMENT AIR TO BUBBLER PANEL 2.
32 12" X 12" SUPPLY AIR DUCT DOWN TO EL 100 W/10" X 10" 500 CFM REGISTER AT EL 112.0 AND 10" X 6" 325 CFM REGISTER AT EL 101.0
33 2" TV-1P SUMP PUMP DISCHARGE.
34 12" FLANGED COUPLING ADAPTOR W/RESTRAINING RODS. SEE DETAIL, SHT. M-30.
35 HOLE THROUGH FLOOR TO ALLOW 12" TX-3P W/CLEARANCE.

36. CONTRACTOR SHALL SUPPLY & INSTALL GALV. STEEL GRATING & SUPPORT MEMBERS TO SUPPORT A LIVE LOAD OF 150 PSF WITH A DEFLECTION NOT TO EXCEED 1/4". CONTRACTOR SHALL ALSO SUPPLY & INSTALL GRATING SUPPORT MEMBERS AROUND THE PERIPHERY OF ALL OPENING IN THE GRATING WHICH ARE SQUARE OR RECTANGULAR IN SHAPE.

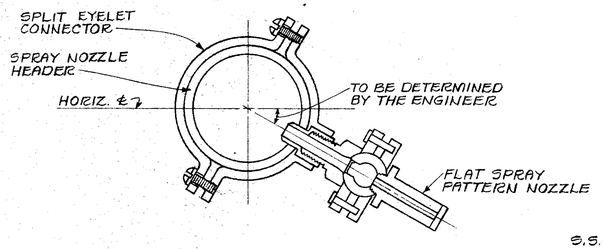

SPRAY NOZZLE DETAIL 3 | 3 | 7
NO SCALE

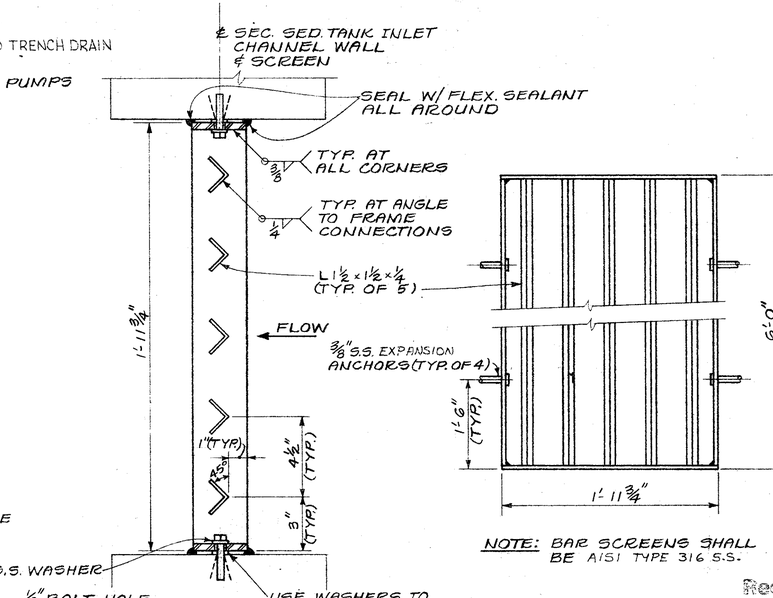

PLAN
SCALE: 3" = 1'-0"

NOTE: BAR SCREENS SHALL BE AISI TYPE 316 S.S.

ELEVATION DETAIL 1 | 5 | 7
NO SCALE

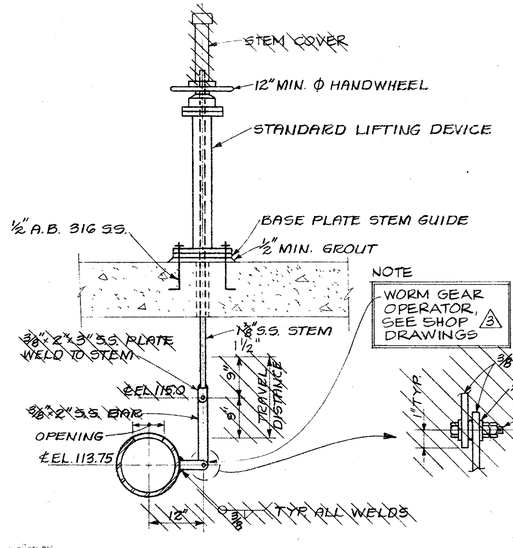

SCUM COLLECTOR OPERATOR DETAIL 2 | 7 | 7
SCALE: 3/4" = 1'-0"

GRAPHIC SCALE
1/4" = 1'-0" 0 5 10
3/4" = 1'-0" 0 1 2 3 4
3" = 1'-0" 0" 3" 6" 9" 12"

Record Drawing
This set of drawings has been prepared, based on information furnished by others, but the Engineer does not warrant that it is complete or accurate. The Engineer assumes no responsibility for the errors or omissions in this document as a result of information provided by others.
Dated 4-22-82, 19

Revised	Description	Submit.	Appr'd.	Date
4	C.O. NO. 29			
3	SUBSTITUTION			
2	CO NO. 28			
1	CO NO. 24			

Refer to Tracing for Latest Revision

Reference Information and Notes:

FOR TYPICAL EQUIPMENT ANCHORAGE SEE SHEET M-24

REFER TO THE NOTE WITH THIS NUMBER

Designed	JHF/ J.A.F.
Drawn	A.M.
Checked	JHF
Date	1-29-81

Wastewater Plant Improvements C-06-2464
Sausalito - Marin City Sanitary District
Kennedy/Jenks Engineers San Francisco
Submitted: Walter Hamza 09370 Approved: Robert J. Owen

PIPE GALLERY SECTIONS

Scale: AS SHOWN
Job No. 0112
Sheet M-7 of

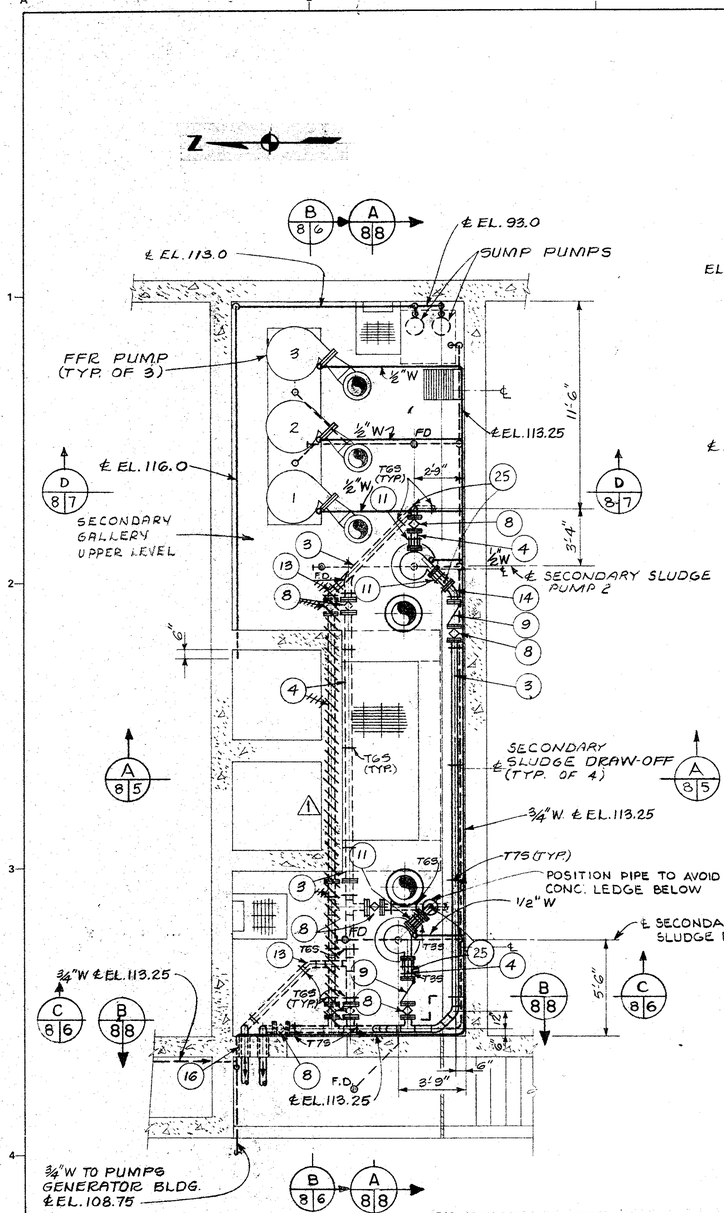

PLAN
SCALE: 1/4" = 1'-0"

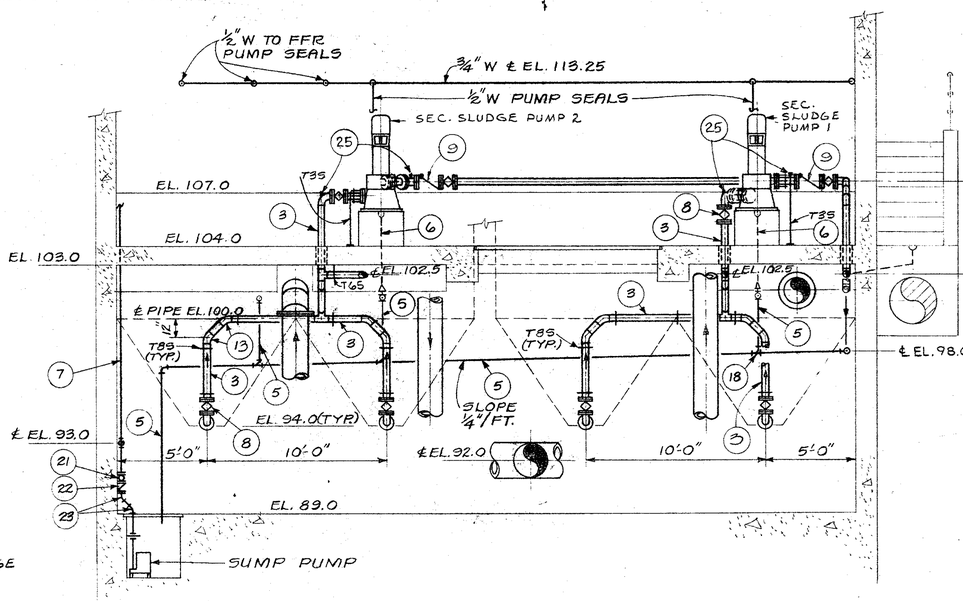

SECTION A
SCALE: 1/4" = 1'-0"

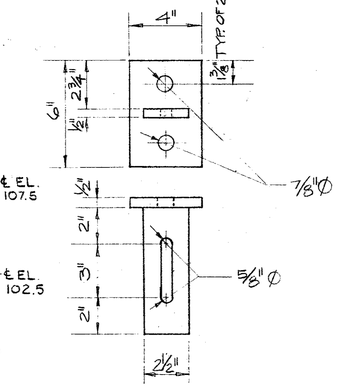

CEILING AND SIDE WALL SUPPORT BRACKETS DETAIL
SCALE: 1/4" = 1"

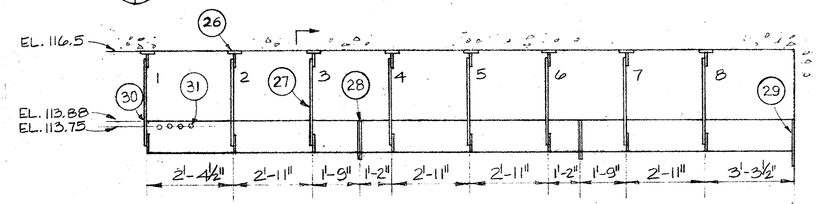

SECONDARY EFFLUENT TROUGHS ELEVATION
NOT TO SCALE

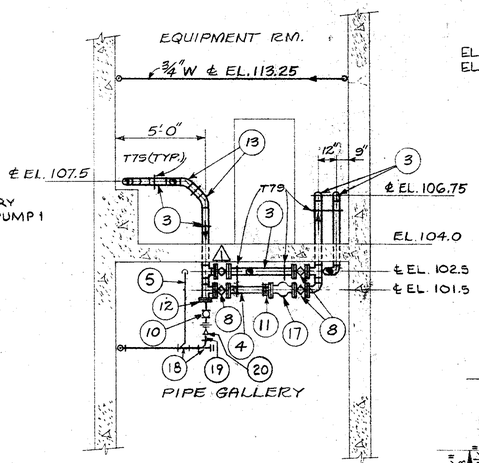

SECTION B
SCALE: 1/4" = 1'-0"

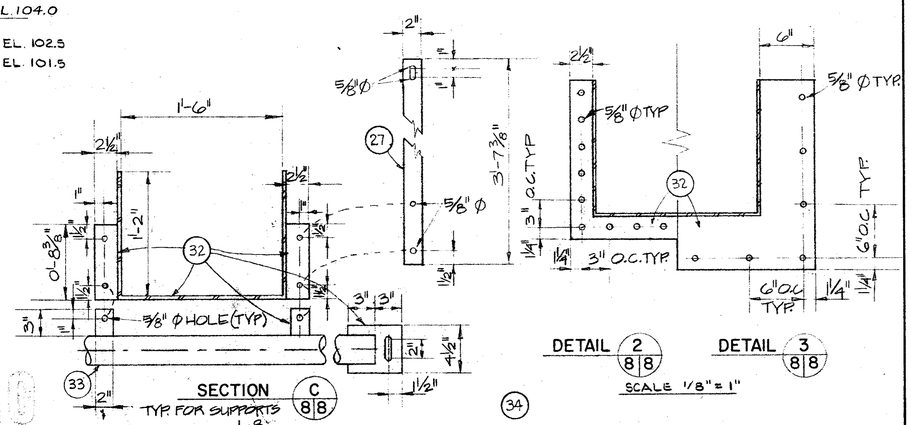

SECTION C
DETAIL 2
DETAIL 3
SCALE 1/8" = 1"

FOR ADDITIONAL EQUIPMENT AND PIPING IN THE SECONDARY GALLERY AT THIS ELEVATION SEE SHEET M-3

Record Drawing
These record drawings have been prepared, in part, on the basis of information compiled and furnished by others. Kennedy/Jenks/Chilton is not responsible for any errors or omissions in this document as a result of information supplied by others.
Dated 9-29 19 88

1 ALL DRAIN LINES SHALL SLOPE 1/4" PER FT. TO SUMP (MIN.).
2 SEE SHTS. M-3 & M-4 FOR PIPING NOT SHOWN ON THIS DWG.
3 4" T.V-1P.
4 4" T.N-7P.
5 3" T.N-4P.
6 2" T.N-4P.
7 2" T.V-1P.
8 4" PLUG VALVE.
9 4" BALL CHECK VALVE.
10 2" BALL VALVE. (PVC)
11 4" F.C.A. W/ANCHOR STUDS
12 4" T.V-1P BLIND FLANGE W/2" THREADED TAP.
13 4" T.V-1P 45° ELL.
14 4" T.N-7P 45° ELL.
15 4" T.N-7P 90° ELL.
16 WALL PENETRATION, SEE DETAIL 8|3
17 4" FLOW METER.
18 3" T.N-4P SAN. TEE (TYP.).
19 3" PVC NO-HUB ADAPTER.
20 3" X 2" T.V-1P BUSHING.
21 2" PLUG VALVE.
22 2" BALL CHECK VALVE.
23 2" T.V-1P 45° ELL.
24 WHERE 2-45° BENDS OF TV-1P ARE SHOWN, FACTORY MADE SMOOTH BENDS MAY BE SUBSTITUTED.
25 GAGE CONNECTION DETAIL 10/M-31
26 STEEL CEILING HANGER AND SIDE WALL BRACE (TYP OF 16 PER TROUGH AT TOP AND 4 PER TANK AT SIDE WALLS). SEE DETAIL 1/M-8. AT THE CONTRACTOR'S OPTION THESE MAY BE CAST IN THE CEILING. IF SO, ADD TWO ½" X 2" X 8" FLAT BAR ANCHOR HOOKS TO EACH PLATE.
27 3/8" STEEL BAR. LENGTH IS NOMINAL. SOME WILL BE SHORTER DUE TO THE CONCRETE PIPE ENCASEMENT FOR THE REACTOR SUPPLY AND DRAIN LINES.
28 TROUGH SECTION JOINT. SEE DETAIL 2|8|3
29 END CONNSCTION. SEE DETAIL 3/M-8
30 PROVIDE SPECIAL END WEIR PLATE SIMILAR TO DETAIL 6/M-31 W/ CENTER OF NOTCH AT THE CENTER OF THE PLATE.
31 HOLES FOR WEIR PLATES DRILLED TO MATCH HOLES PER DETAIL 2|8|3
32 ¼" PLATE OR BAR STOCK 8|3
33 3-INCH SCHED 40 AISI TYPE 316 SS PIPE TO SPAN TANK. CONNECT TO THE TROUGH AT THE LOWER HOLES AT SUPPORTS 1 AND 5 ONLY. CONNECT TO THE SIDE WALLS AT WALL SUPPORTS PER DETAIL 1|8|5 LENGTH IS 19'-2" NOMINAL.
34 ITEMS 26 THROUGH 33 ABOVE AND ALL CONNECTING HARDWARE TO BE AISI TYPE 316 STAINLESS STEEL

GRAPHIC SCALE
1/4" = 1'-0"
0 5 10

Revised	Description	Submit.	Appr'd.	Date
1	FIELD CHANGE			

Refer to Tracing for Latest Revision

Reference Information and Notes:

FOR TYPICAL EQUIPMENT ANCHORAGE SEE SHEET M-24
REFER TO THE NOTE WITH THIS NUMBER

Designed	JHF/JAF
Drawn	AM/JHF
Checked	JHF
Date	1-29-81

Wastewater Plant Improvements C-06-2464
Sausalito - Marin City Sanitary District
Kennedy/Jenks Engineers San Francisco
Submitted: Walter J. Hoffman C3370 Approved: Robert J. Ames

PIPE GALLERY
SLUDGE PUMPS AND PIPING

Scale: AS SHOWN
Job No. 0112
Sheet M-8 of

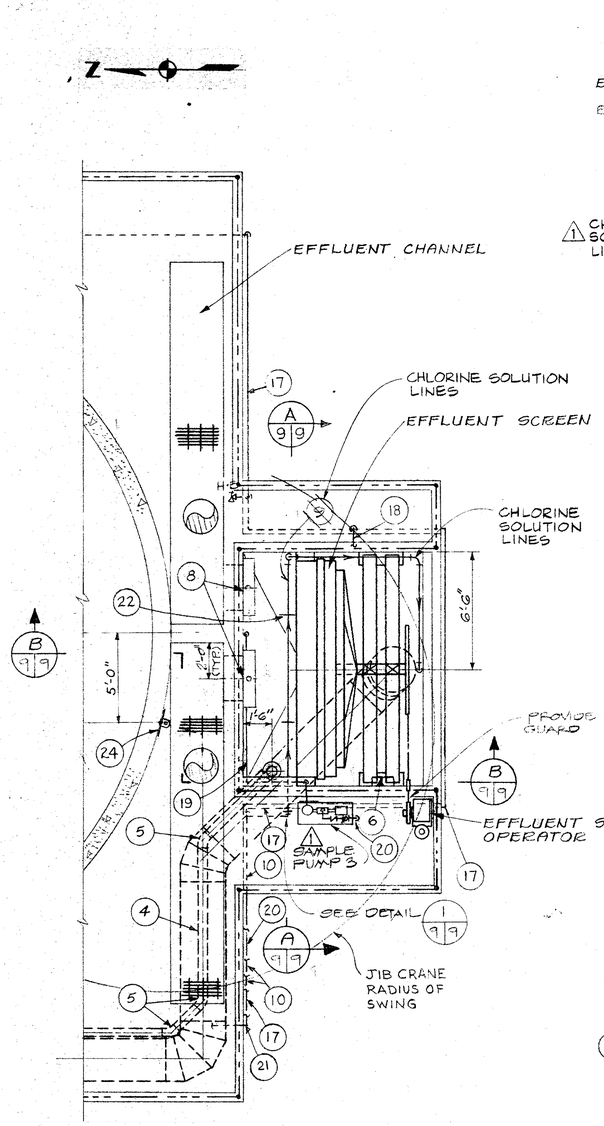

PLAN
SCALE : 1/4" = 1'-0"

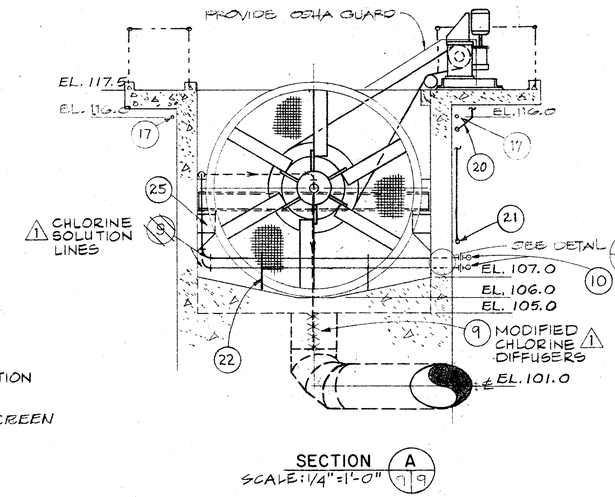

SECTION A
SCALE: 1/4" = 1'-0" 9/9

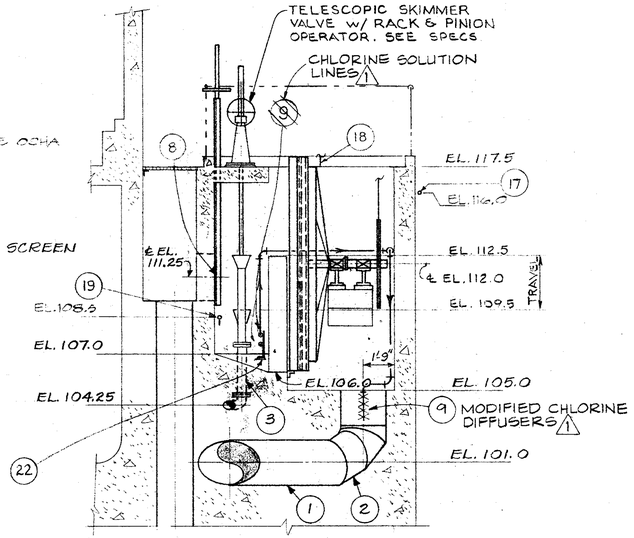

SECTION B
SCALE: 1/4" = 1'-0" 9/9

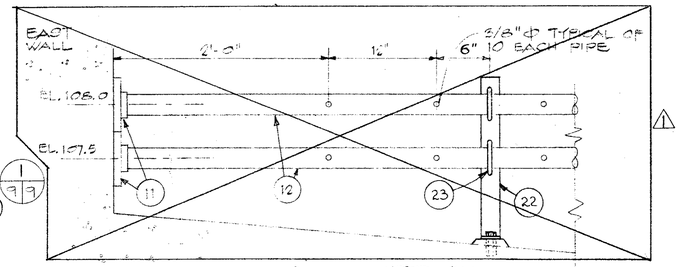

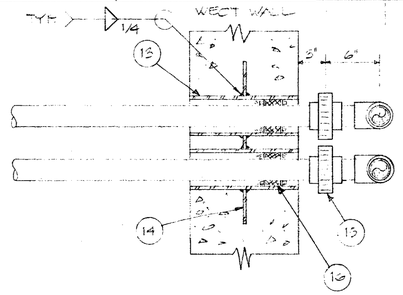

CHLORINE DIFFUSERS DETAIL 1 (SEE BELOW)
SCALE : 1 1/2" = 1'-0" 9/9

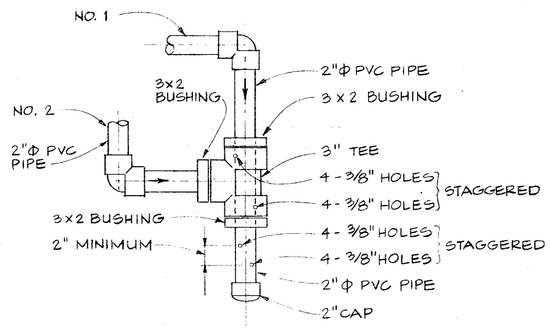

MODIFIED CHLORINE DIFFUSERS ⚠1
SCALE: NONE

1 30" T.L.P.
2 30" T.L.P. 90° BEND
3 6" T.N-7P
4 6" T.V-1P
5 6" T.V-1P 45° ELL
6 LADDER TO EL 112 SEE DETAIL 3/A-14
7 LADDER TO BOTTOM SEE DETAIL 3/A-14
8 30" X 30" SLIDE GATE. (SEE M-5 AND SPECS.)
9 2" T.V-1P DIFFUSER. SEE DETAIL 1 9/H
10 2 - 2" T.V-1P ℄ 107.5, 108.0
11 2" T.V-1P FLANGE USED AS SUPPORT BRACKET. ATTACH W/4-316 SS BOLTS.
12 2" T.V-1P DRILL 10-3/8" HOLES AT ℄ FACING UPSTREAM. SOLVENT WELD BLANK AT END OF PIPE. SLIDE PIPE INTO FLANGED SUPPORT BRACKET UNTIL IT MEETS THE WALL.
13 4" SCHED. 40 STEEL PIPE.
14 12 X 18 X 1/4 STEEL PLATE. HOT DIP GALV. PLATE AND PIPE AFTER FABRICATION.
15 2" T.V-1P THREADED UNION.
16 SEE DETAIL 7 9/32
17 3" T.V-1P. 9/32
18 2" T.V-1P CONNECT TO EFF. SCREEN WATER SPRAY SOLENOID VALVE.
19 1-1/2" T.V-1P SAMPLE 3.
20 1" TV-1P SAMPLE 3
21 ½" TV-1P INSTRUMENT AIR TO BUBBLER PANEL 2
22 PIPE SUPPORT. ½" X 2" BAR AISI TYPE 316 SS BENT W/ 2" X 2" BASE. CONNECT TO FLOOR SLAB W/ 3/4" 316 SS DRILLED IN OR SLEEVE TYPE ANCHOR. TYPICAL FOR 2 SUPPORTS 3'-6" FROM EACH WALL.
23 ½" AISI TYPE 316 SS U-BOLT. TYPICAL OF 2 PER SUPPORT. DOUBLE NUT.
24 WALL MOUNT FOR JIB CRANE. SEE SPECS.
25 CORBELS. SEE SCREEN MANUFACTURER'S DWGS FOR DIMENSIONS AND LOCATION.

Record Drawing
APR 29 88

GRAPHIC SCALE
1/4" = 1'-0" 0 5 10
1 1/2" = 1'-0" 0 1 2

Revised	Description	Submit.	Appr'd.	Date
⚠1	FIELD CHANGE			

Refer to Tracing for Latest Revision

Reference Information and Notes:

FOR TYPICAL EQUIPMENT ANCHORAGE SEE SHEET M-24

REFER TO THE NOTE WITH THIS NUMBER

Designed	JHF/JAF
Drawn	AM/JHF
Checked	JHF
Date	1-29-81

Wastewater Plant Improvements C-06-2464
Sausalito - Marin City Sanitary District

Kennedy/Jenks Engineers — San Francisco

Submitted: Walter J. Grassmann C 9370 Approved: Robert J. Ames

EFFLUENT SCREEN PLAN AND SECTIONS

Scale	1/4" = 1'-0"
Job No.	0112
Sheet	M-9
of	

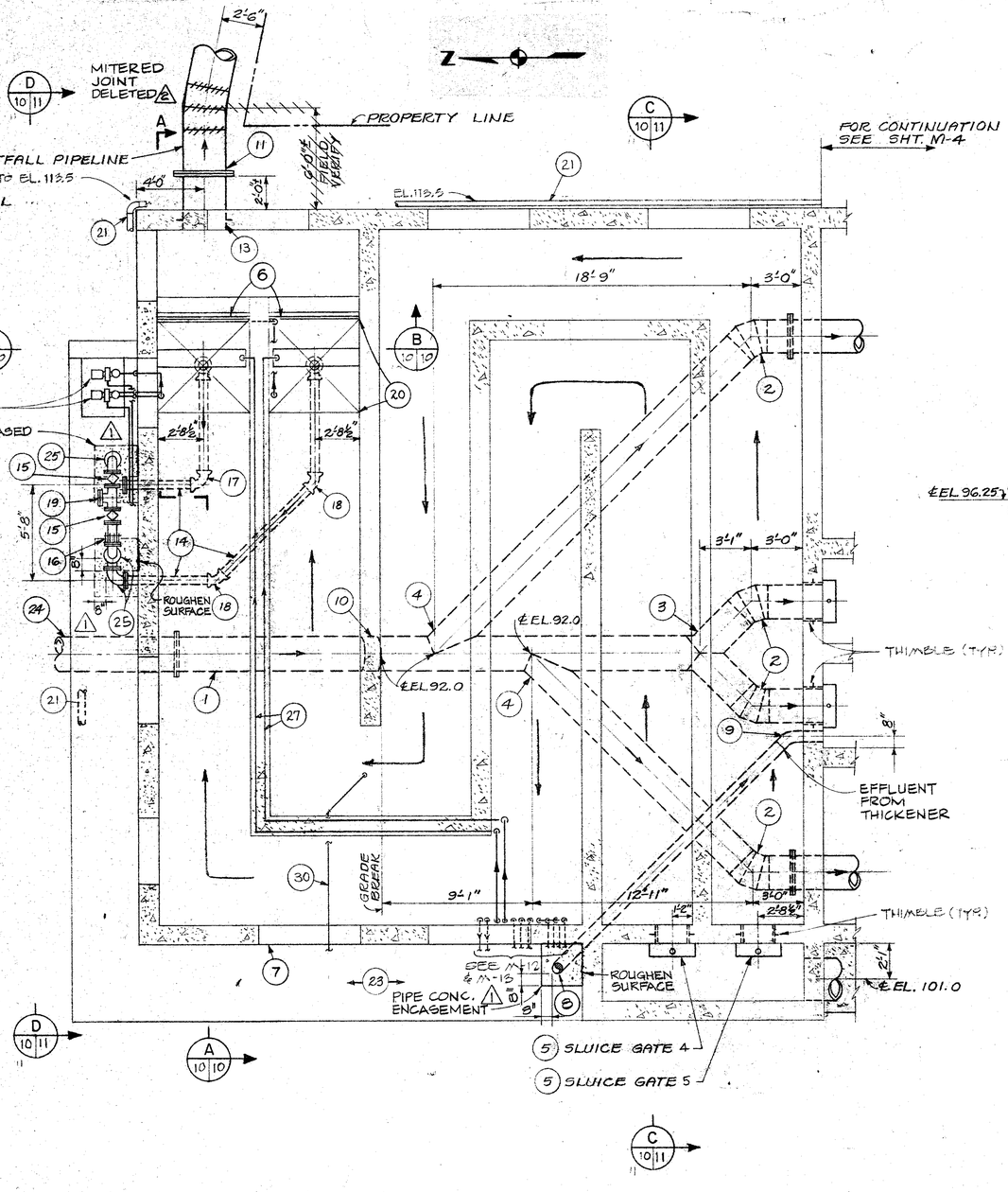

PLAN AT ELEVATION 111.0 ±

SCALE: 1/4" = 1'-0"

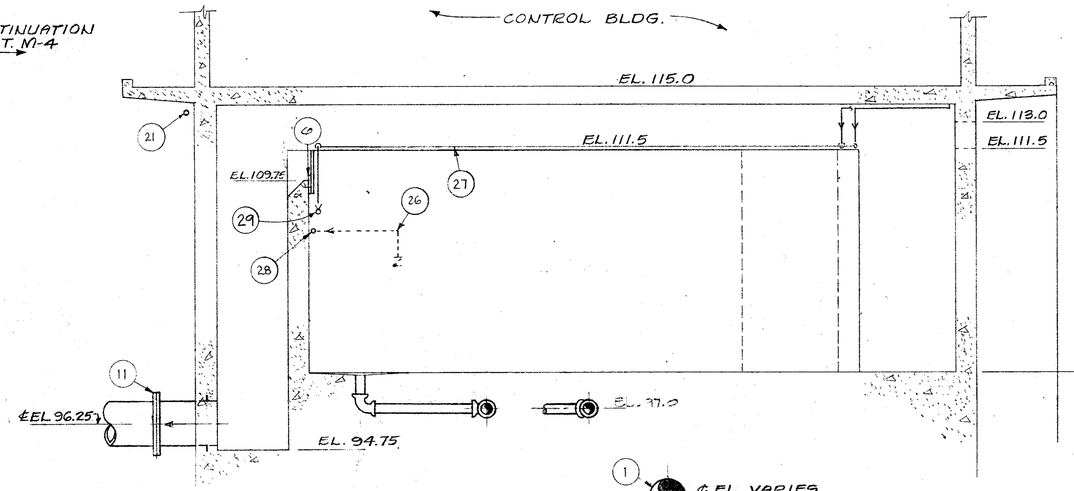

SECTION A

SCALE: 1/4" = 1'-0"

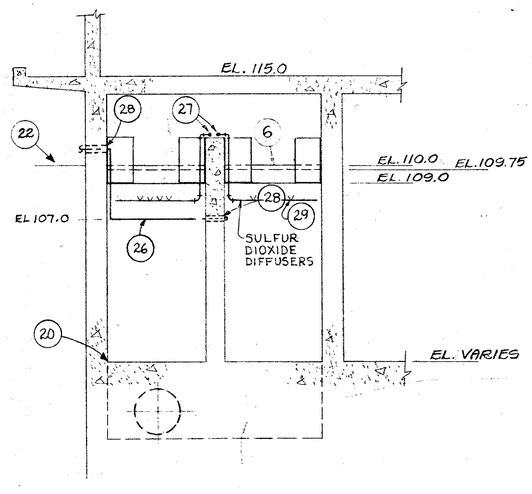

SECTION B

SCALE: 1/4" = 1'-0"

1 24" T.L.P.
2 24" T.L.P. 45° ELL
3 24" T.L.P. 90° TRUE WYE
4 24" T.L.P. 45° LATERAL
5 24" X 24" HEAVY DUTY SLUICE GATE
6 WEIR SEE DETAIL 1/M-31
7 6'-0" X 1"-6" VENT (TYP.). SEE STRUCTURAL SHTS. FOR LOCATION.
8 8" T.N-1P FOR CONTINUATION. SEE SHEET M-17.
9 8" T.N-1P 45° ELL.
10 11-1/4° ± T.L.P. BEND.
11 FLANGE JOINT W/RETAINER RING.
12 30" T.U.P.
13 30" TN-7P W/O GLASS LINING.
14 6" T.N-7P.
15 6" PLUG VALVE.
16 6" F.C.A.
17 6" T.N-1P 90° ELL.
18 6" T.N-1P 45° ELL.
19 6" T.N-7P TEE W/BLIND FLANGE.
20 EL. 99.0 @ WALLS SLOPE TO FLOOR DRAIN 2 EL. 98.92. (TYP. FOR BOTH CHANNELS).
21 4" T.V-1P RECLAIMED WATER.
22 FOR RECLAIMED WATER PIPING SEE M-12.
23 FOR PIPING THIS AREA SEE M-17.
24 24" T.M-2P (SEE SHEET G-6).
25 6" T.N-7P 90° ELL.
26 2" T.V-1P SAMPLE PUMP SUCTION (TYP. OF 2).
27 TWO 1" T.V-1P SULFUR DIOXIDE SOLUTION.
28 SEE NOTE 3/18-21 AND DETAIL 1/M-13
29 SO_2 DIFFUSER SEE DETAIL 1/M-13
30 3" T.V-1P RECLAIMED WATER UP TO INJECTORS.

Record Drawing

This record drawing has been prepared, in part, on the basis of information compiled and furnished by others. Kennedy/Jenks/Chilton is not responsible for any errors or omissions in this document as a result of information provided by others.

Dated APR. 29, 19 88

RECORD DRAWING

GRAPHIC SCALE

1/4" = 1'-0" 0 5 10

Revised	Description	Submit.	Appr'd.	Date
2/1	FIELD CHANGE CO NO. 34			

Refer to Tracing for Latest Revision

Reference Information and Notes:

FOR TYPICAL EQUIPMENT ANCHORAGE SEE SHEET M-24

REFER TO THE NOTE WITH THIS NUMBER

Designed JHF/JAF
Drawn AM/JHF
Checked JHF
Date 1-29-81

Wastewater Plant Improvements C-06-2464
Sausalito - Marin City Sanitary District
Kennedy/Jenks Engineers San Francisco
Submitted: Approved:

CHLORINE CONTACT STRUCTURE
PLAN AND SECTIONS

Scale 1/4" = 1'-0"
Job No. 3112
Sheet M-10 of

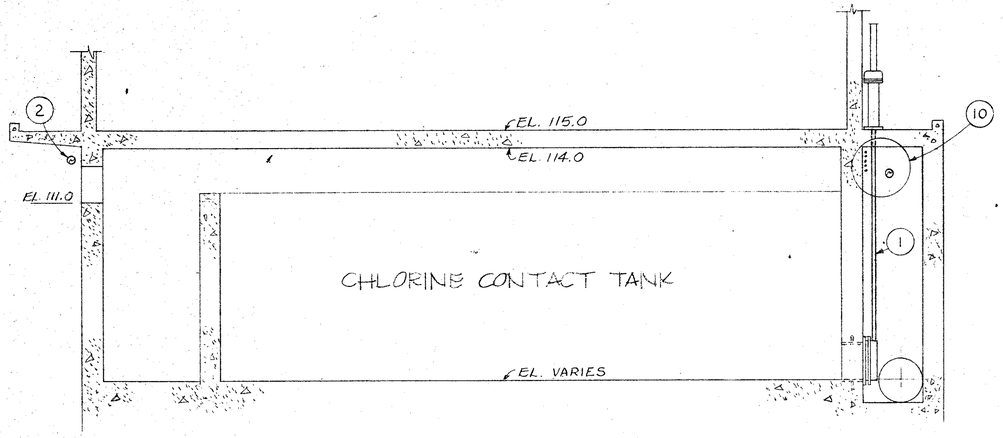

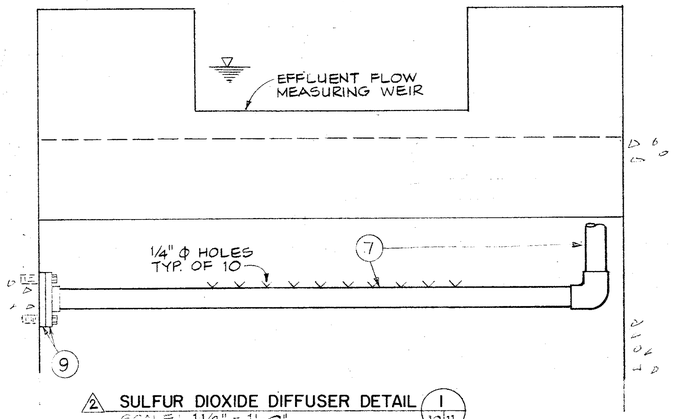

2 SULFUR DIOXIDE DIFFUSER DETAIL 1 (10|11)
SCALE: 1 1/2" = 1'-0"

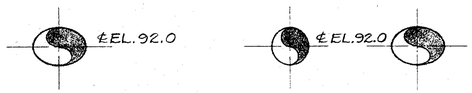

SECTION C (10|11)
SCALE: 1/4" = 1'-0"

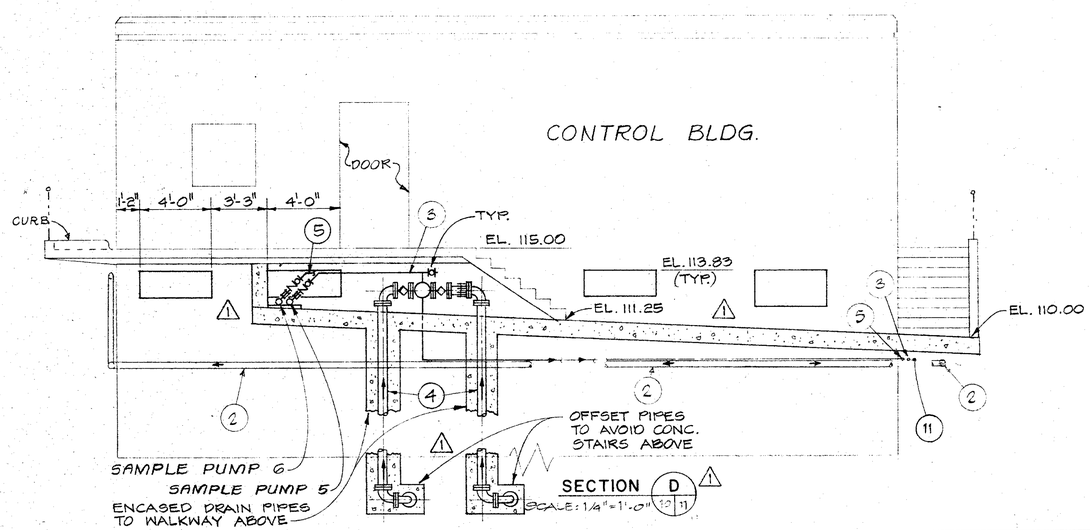

SECTION D (10|11)
SCALE: 1/4" = 1'-0"

1 30" X 30" SLUICE GAGE W/WALL THIMBLE. SEE SPECS.
2 4" T.V-1P REC. WATER.
3 3/4" T.V-1P SAMPLE 5.
4 6" T.N-7P TANK DRAIN.
5 3/4" T.V-1P SAMPLE 6.
6 SEE NOTE 3/M-21 AND DETAIL 1 (11|9)
7 2" T.V-1P
8 ~~3/16" Ø IN BOTTOM OF PIPE. TYPICAL OF 10.~~
9 2" T.V-1P. SOLVENT WELD BLIND FLANGE TO FLANGE. ATTACH TO WALL W/4 - 1/4" 316 SS SLEEVE ANCHORS.
10 FOR PIPING SEE M-12.
11 ½" TV-1P INSTRUMENT AIR TO BUBBLER PANEL 3. SEE ELECTRICAL DWGS.

Record Drawing
Dated APR. 29 88

GRAPHIC SCALE
1/4" = 1'-0" 0 5 10
1 1/2" = 1'-0" 0 1 2

Revised	Description	Submit.	Appr'd.	Date
2	FIELD CHANGE			
1	CO NO. 34			

Refer to Tracing for Latest Revision

Reference Information and Notes:

FOR TYPICAL EQUIPMENT ANCHORAGE SEE SHEET M-24
REFER TO THE NOTE WITH THIS NUMBER

Designed JHF/JAF
Drawn AM/JHF
Checked JHF
Date 1-29-81

Wastewater Plant Improvements C-06-2464
Sausalito - Marin City Sanitary District
Kennedy/Jenks Engineers San Francisco
Submitted: Walter F. Gassman
Approved: Robert J. Amen

CHLORINE CONTACT STRUCTURE
SECTIONS

Scale 1/4" = 1'-0"
Job No. 0112
Sheet M-11 of

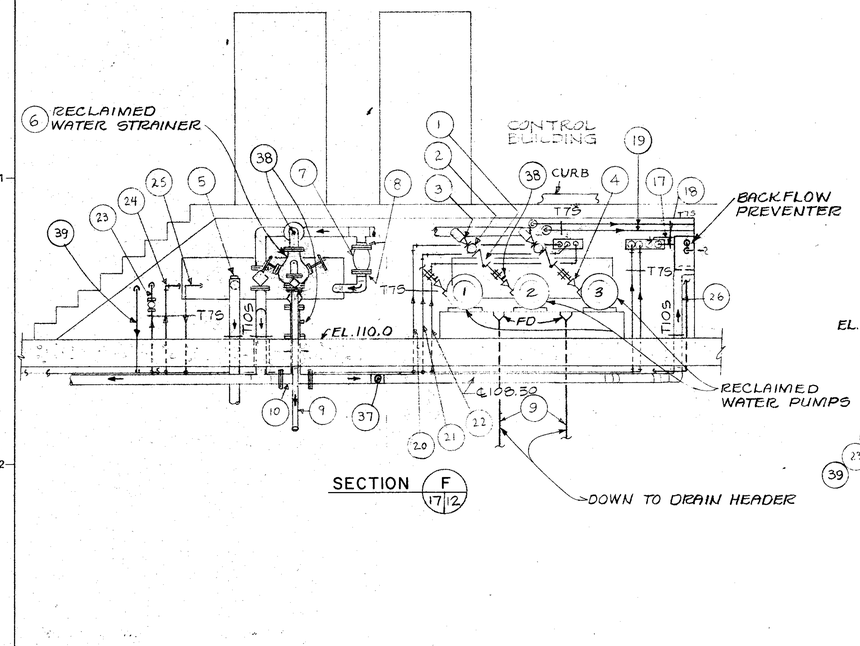

SECTION F 17/12

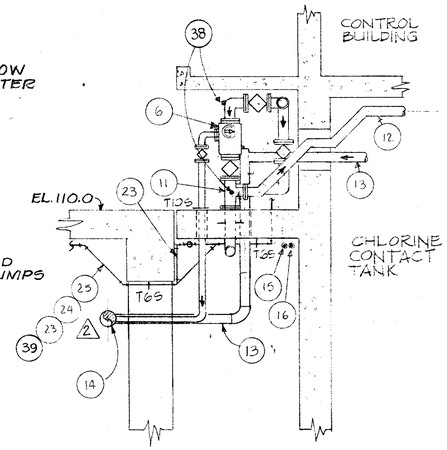

SECTION G 17/12

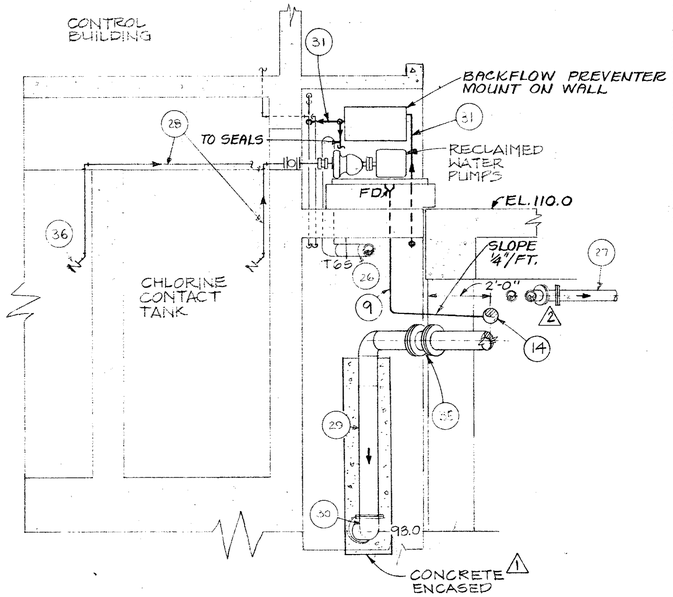

SECTION H 17/12

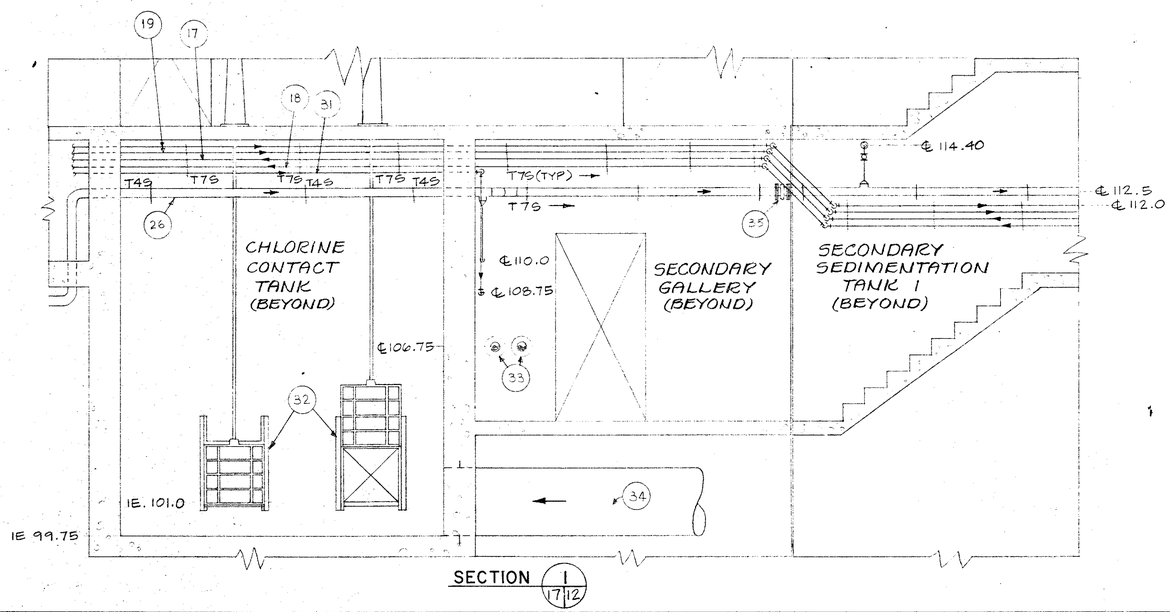

SECTION I 17/12

1 2" THREADED CHECK VALVE
2 2" TRUE UNION BALL VALVE (TYP. OF 9).
3 2 X 4 INCREASER.
4 1-1/2" X 2" INCREASER
5 4" TEE W/BLIND FLANGE AND 4" PLUG.
6 STRAINER (SEE SPECS.).
7 3" PRV (SEE SPECS.).
8 3 X 4 REDUCER.
9 2" TV-1P DRAIN.
10 4" TN-7P SPECIAL TEE W/CUTOFF FLANGE.
11 4" TN-7P TEE. GROUT AROUND LOWER FLANGE
12 4" TV-1P RECLAIMED WATER.
13 4" TV-1P DRAIN.
14 6" TV-1P SCREEN DRAIN.
15 3/4" TV-1P SAMPLE 5.
16 3/4" TV-1P SAMPLE 6.
17 3/4" TV-1P SAMPLE 4.
18 3/4" TV-1P SAMPLE 3.
19 2" TV-1P CHLORINE SOLUTION.
20 1-1/2" TV-1P SULFUR DIOXIDE VACUUM.
21 1-1/2" TV-1P CHLORINE VACUUM.
22 1-1/2" TV-1P CHLORINE VACUUM.
23 1-1/2" TV-1P POTABLE WATER.
24 3/4" TV-1P HOT WATER RETURN.
25 3/4" TV-1P HOT WATER SUPPLY.
26 4" TV-1P RECLAIMED WATER.
27 4" TV-1P PRIMARY/SECONDARY SLUDGE.
28 2" TV-1P PUMP SUCTION.
29 8" TV-1P THICKENER OVERFLOW
30 8" TN-7P 90° ELL
31 3/4" TV-1P
32 30 X 30 SLUICE GATE W/WALL THIMBLE
33 4" TV-1P SLUDGE
34 30" TL-P SECONDARY EFFLUENT
35 RUBBER COUPLING. SEE SPECS.
36 FOOT VALVE. SEE SPECS.
37 4" TEE W/REDUCER TO 1-1/2" T.V-1P.
38 GAGE CONNECTIONS (TYP.) DETAIL 10/M-31
39 1/2" TV-1P INSTRUMENT AIR FROM AIR RECEIVER TO BUBBLER PANELS 1-7 AND HYDROPNEUMATIC TANK.

Record Drawing
Dated APR. 29 88

3/8" = 1'-0"

GRAPHIC SCALE
0 5 10

Revised	Description	Submit.	Appr'd.	Date
2	FIELD CHANGE			
1	CO NO. 34			

Refer to Tracing for Latest Revision

Reference Information and Notes:

FOR TYPICAL EQUIPMENT ANCHORAGE SEE SHEET M-24

REFER TO THE NOTE WITH THIS NUMBER

Designed JHF
Drawn JHF
Checked JHF
Date 1-29-81

Wastewater Plant Improvements C-06-2464
Sausalito - Marin City Sanitary District

Kennedy/Jenks Engineers San Francisco

Submitted: Walter Hamman
Approved: Robert J. Amey

CHLORINE CONTACT STRUCTURE
SECTIONS

Scale 3/8" = 1'-0"
Job No. 0112
Sheet M-12 of

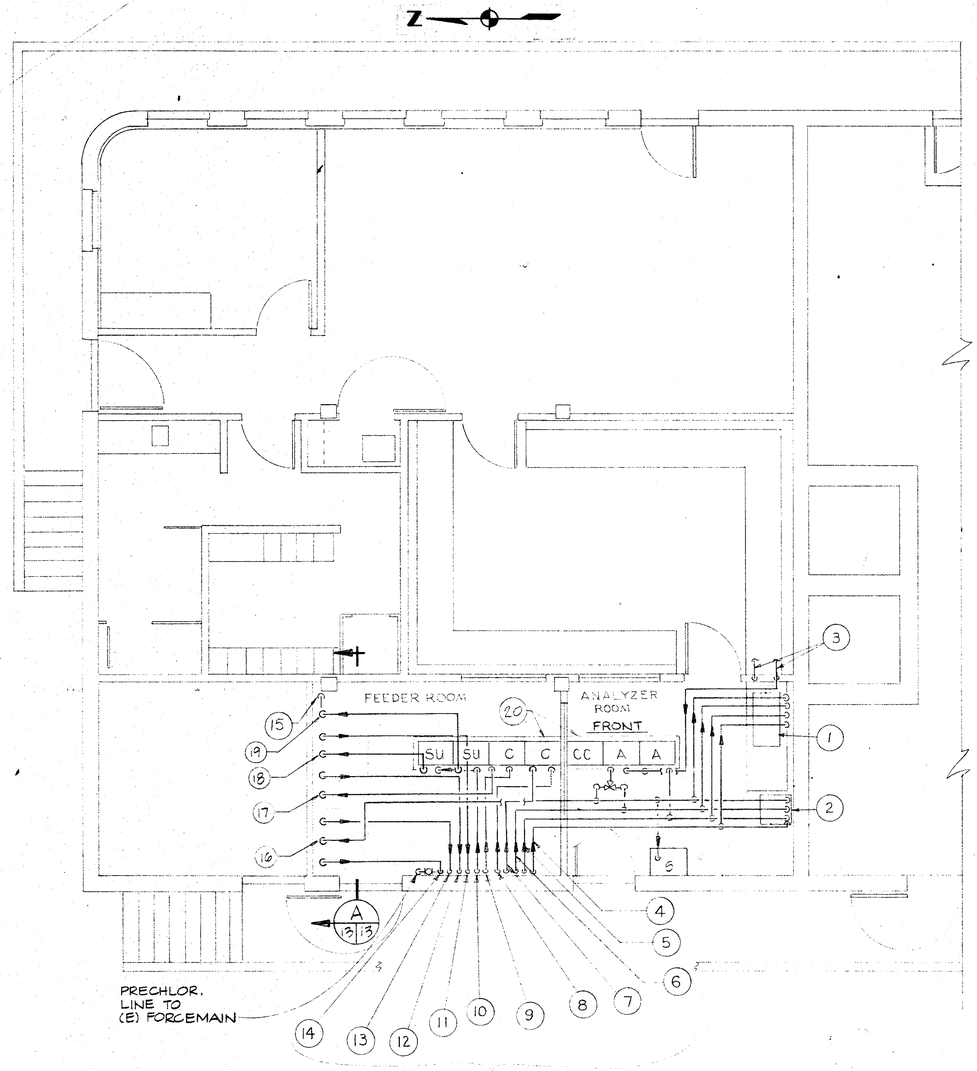

PLAN (22)
SCALE: 1/4" = 1'-0"

SU = SULFONATOR
C = CHLORINATOR
A = ANALYZER
CC = CONTROL CABINET
S = SAMPLER

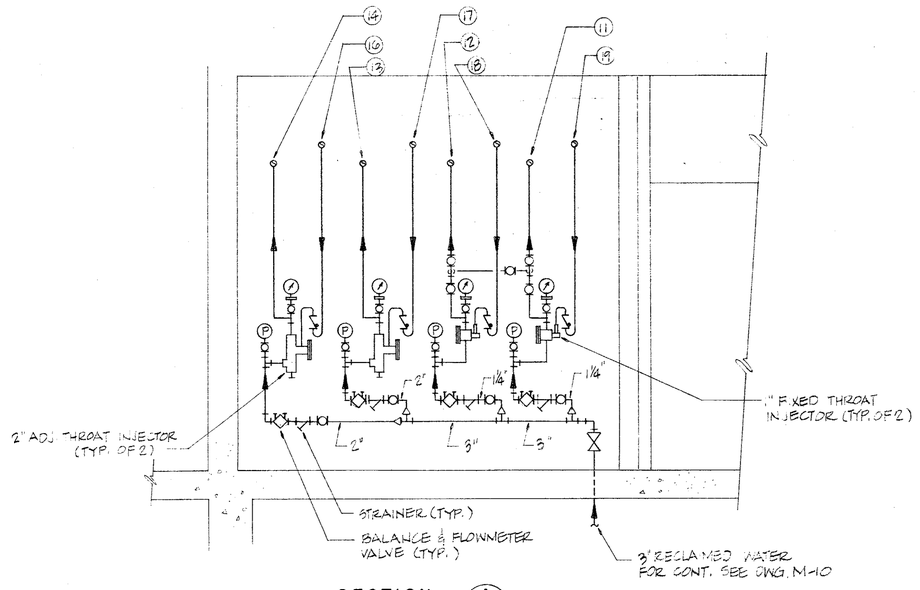

SECTION (A 3|3)
SCALE: 1/2" = 1'-0"

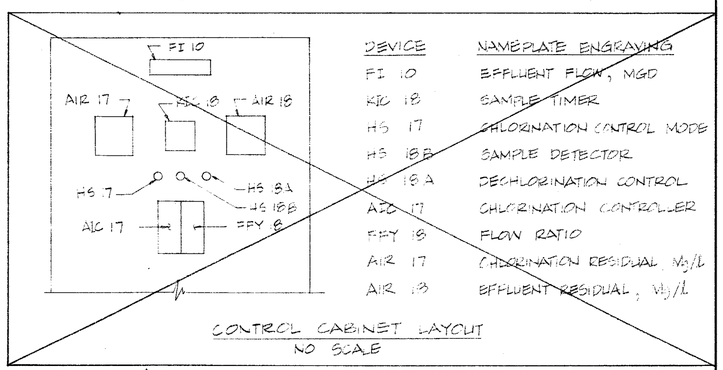

DEVICE	NAMEPLATE ENGRAVING
FI 10	EFFLUENT FLOW, MGD
KIC 18	SAMPLE TIMER
HS 17	CHLORINATION CONTROL MODE
HS 18B	SAMPLE DETECTOR
HS 18A	DECHLORINATION CONTROL
AIC 17	CHLORINATION CONTROLLER
FFY 18	FLOW RATIO
AIR 17	CHLORINATION RESIDUAL mg/l
AIR 18	EFFLUENT RESIDUAL, mg/l

CONTROL CABINET LAYOUT
NO SCALE

1 CONTROL PANEL SHOWN ON SHT. I-5

1 SAMPLE SINK. SEE M-14.
2 FLOOR SINK. SEE M-14.
3 HOT AND COLD WATER LINES. SEE M-14
4 3/4" TV-1P SAMPLE 3.
5 3/4" TV-1P SAMPLE 4.
6 3/4" TV-1P SAMPLE 5.
7 3/4" TV-1P SAMPLE 6.
8 1½" TV-1P CHLORINE GAS.
9 1½" TV-1P CHLORINE GAS.
10 1½" TV-1P SULFUR DIOXIDE GAS.
11 1" TV-1P SULFUR DIOXIDE SOLUTION.
12 1" TV-1P SULFUR DIOXIDE SOLUTION.
13 2" TV-1P CHLORINE SOLUTION.
14 2" TV-1P CHLORINE SOLUTION.
15 3" TV-1P RECLAIMED WATER.
16 3/4" TV-1P CHLORINE VACUUM.
17 3/4" TV-1P CHLORINE VACUUM.
18 3/4" TV-1P SULFUR DIOXIDE VACUUM.
19 3/4" TV-1P SULFUR DIOXIDE VACUUM.
20 4" HIGH CONCRETE PAD. GROUT EQUIPMENT LEVEL ON THE PAD.
~~21 VALVED AND CAPPED FOR FUTURE CONNECTION.~~
22 SEE SCHMATIC ON M-25 FOR FURTHER DETAIL ON PIPING & EQUIPMENT.

Record Drawing
This record drawing has been prepared based on the best available information furnished to Carollo Engineers and reviewed by others. Carollo is not responsible for any errors or omissions in this document as a result of information provided by others.
Dated APRIL 29, 1988

GRAPHIC SCALE
1/2" = 1'-0" 0 1 2 3 4 5
1/4" = 1'-0" 0 5 10

Revised	Description	Submit.	Appr'd.	Date
1	ADDENDUM NO. 3'			

Refer to Tracing for Latest Revision

Reference Information and Notes:

FOR TYPICAL EQUIPMENT ANCHORAGE SEE SHEET M-24
REFER TO THE NOTE WITH THIS NUMBER

Designed ML
Drawn ML
Checked JHF
Date 1-29-81

Wastewater Plant Improvements C-06-2464
Sausalito - Marin City Sanitary District
Kennedy/Jenks Engineers San Francisco
Submitted: Approved:

CONTROL BUILDING PLAN

Scale AS SHOWN
Job No. 0112
Sheet M-13 of

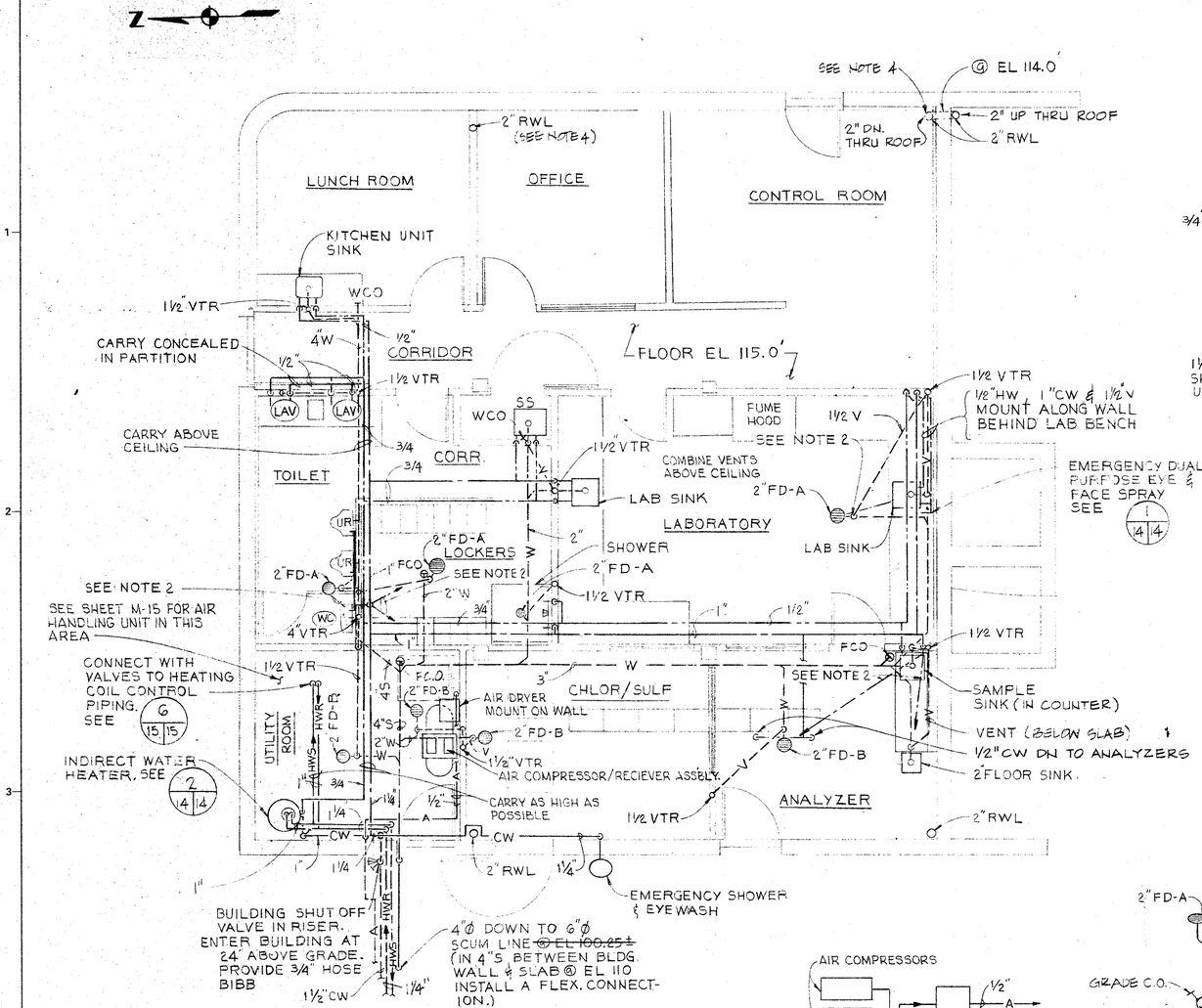

CONTROL BUILDING
SCALE : ¼"=1'-0"

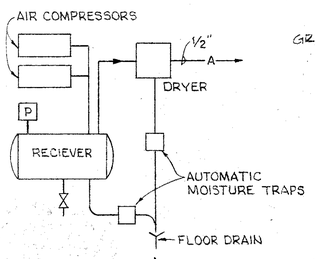

AIR COMPRESSOR SCHEMATIC
SCALE: NONE

PIPE MATERIAL TYPES
(REFER TO SPECIFICATIONS FOR DETAILS)

SERVICE	PIPE TYPE
SOIL	V-2
DRAIN OR WASTE (ABOVE FLOOR)	Y-1 *
DRAIN OR WASTE (BELOW FLOOR)	V-2 *
VENT (ABOVE FLOOR)	Y-1 *
VENT (BELOW FLOOR)	V-2 *
COLD WATER	T-1
HOT WATER	T-1
RAINWATER LEADERS (RWL)	Y-1

* PROVIDE DRAINAGE PATTERN FITTINGS

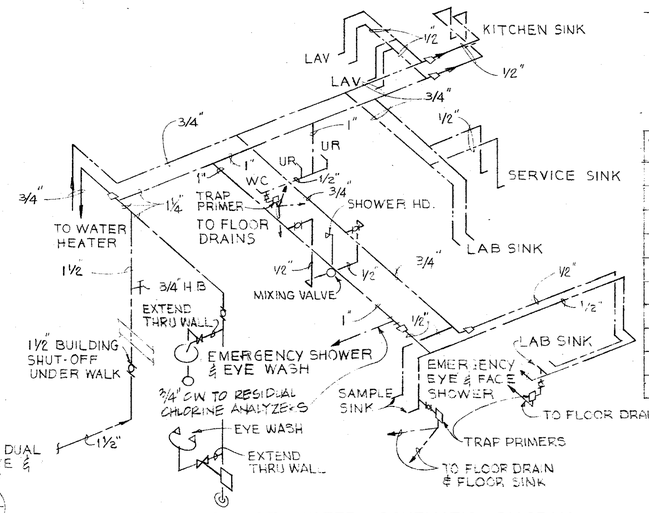

COLD AND HOT WATER SCHEMATIC DIAGRAM
SCALE: NONE

PIPING LEGEND

———	COLD WATER (CW)
———	HOT WATER (HW)
---V---	VENT
W	WASTE
S	SOIL
HB	HOSE BIBB

LOCAL PLUMBING FIXTURE CONNECTION SCHED.
(PIPE SIZES)

SYMBOL	FIXTURE	CW	HW	DRAIN	VENT
WC	WATER CLOSET	½"	—	4"	4"
UR	URINAL	¾"	—	2"	1½
LAV	LAVATORY	½"	½"	1½"	1½"
SHR	SHOWER	½"	½"	2"	1½"
SS	SERVICE SINK	½"	½"	3"	1½"
LS	LAB SINK	½"	½"	1½"	1½"
	SAMPLE SINK	½"	½"	3	1½
KU	KITCHEN UNIT	½"	½"	1½"	1½"
FD	FLOOR DRAINS	½"	—	AS SHOWN	
HB	HOSE BIBB	¾"	—	—	—

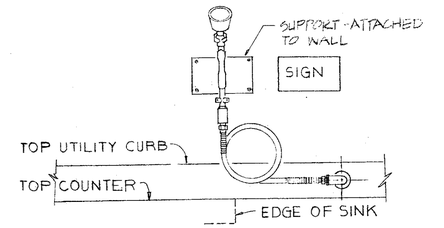

EMERGENCY DUAL PURPOSE EYE & FACE SPRAY DET. 1 | 14 | 4
SCALE : NONE

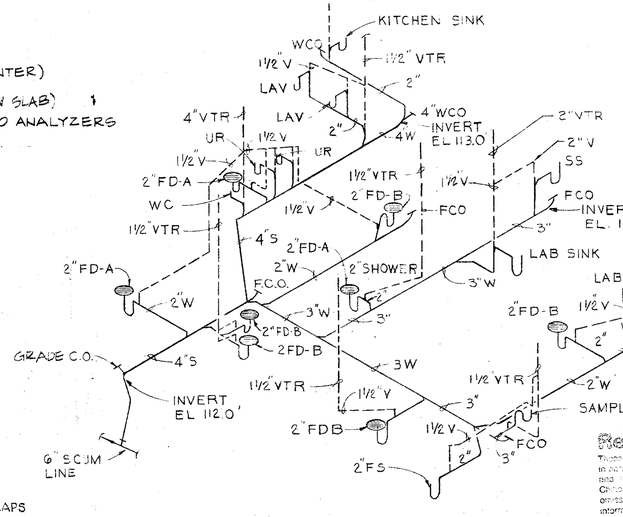

SOIL, WASTE AND VENT SCHEMATIC DIAGRAM
SCALE : NONE

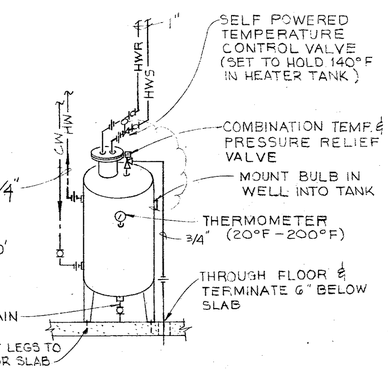

SCHEMATIC DETAIL 2 | 14 | 4
NO SCALE

INDIRECT WATER HEATER
SCALE: NONE

Record Drawings
These record drawings are from plans, products, and information furnished by the contractor and subcontractors. CH2M HILL has not verified the accuracy or completeness of this information. Date: APR. 29 88

GRAPHIC SCALE
1/4" = 1'-0"
0 5 10

Revised	Description	Submit.	Appr'd.	Date
Refer to Tracing for Latest Revision				

Reference Information and Notes:
1. CW, HW PIPING SHALL BE RUN CONCEALED ABOVE CEILING OR IN PARTITIONS EXCEPT IN UTILITY ROOM UNLESS OTHERWISE NOTED.
2. FLOOR DRAIN AND FLOOR SINK TRAPS SHALL BE PRIMED USING AUTOMATIC TRAP PRIMERS WHERE INDICATED, RUN ½"CW IN SLAB FROM PRIMER (BELOW SINK OR WATER CLOSET) TO CONNECTION ON TRAP.
3. SEE SCHEMATIC SOIL, WASTE & VENT DIAGRAM & HOT & COLD WATER DIAGRAM FOR DETAILS
4. PROVIDE 2" ROOF DRAINS ON ROOF (WHERE INDICATED ON BUILDING ROOF PLAN) EXTEND 2"RWL'S TO BELOW BOTTOM OF FLOOR SLAB AND THEN DISCHARGE.

Designed	MSA
Drawn	L. SANTOS
Checked	THF
Date	1-29-81

Wastewater Plant Improvements C-06-2464
Sausalito - Marin City Sanitary District

Kennedy/Jenks Engineers — San Francisco

Submitted: Walter F. Hamman 09370 — Approved: Robert J. Brown

CONTROL BUILDING
PLUMBING AND DRAINAGE

Scale: 1/4"=1'-0"
Job No. 0112
Sheet M-14 of

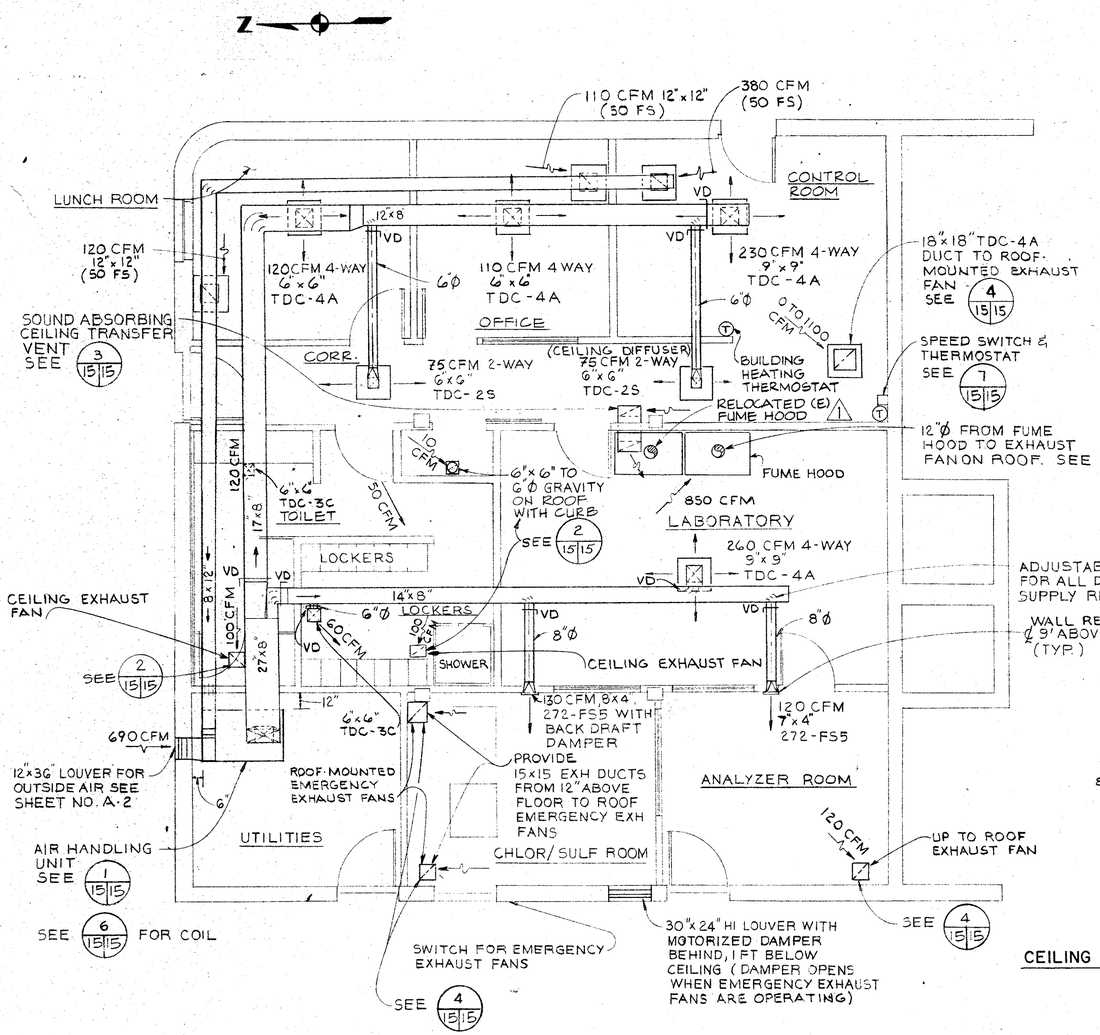

CONTROL BUILDING
SCALE : 1/4"= 1'-0"

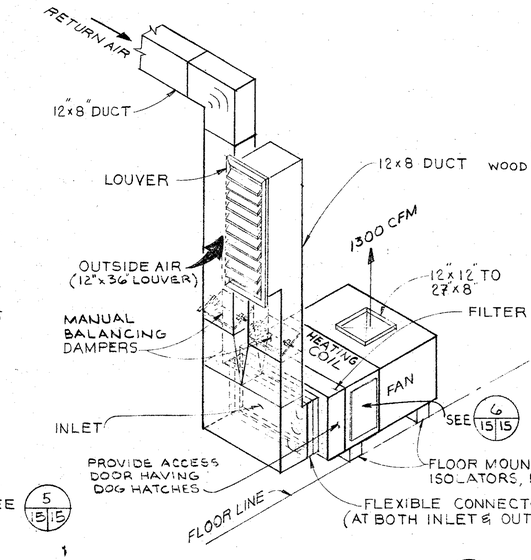

AIR HANDLING UNIT DETAIL 1
NO SCALE 15|15

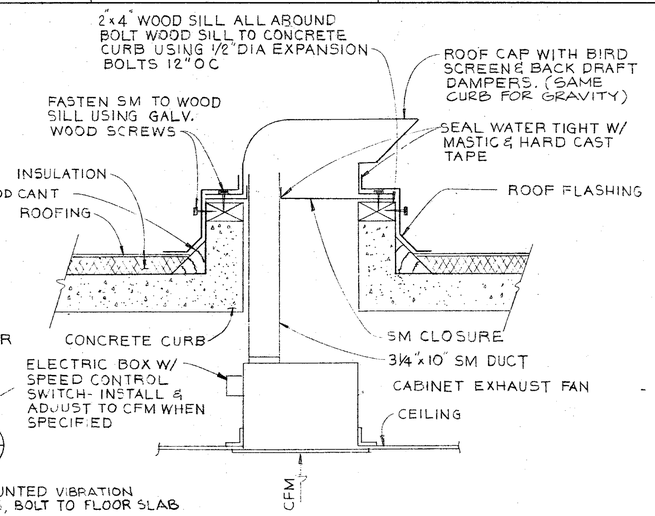

CEILING EXHAUST FAN DETAIL 2
NO SCALE 15|15

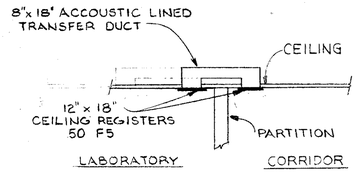

CEILING TRANSFER VENT DETAIL 3
NO SCALE 15|15

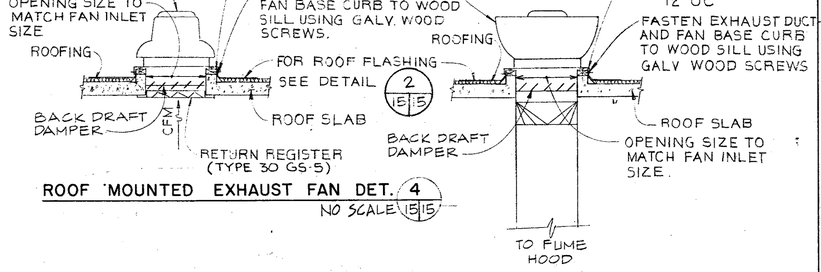

ROOF MOUNTED EXHAUST FAN DET. 4
NO SCALE 15|15

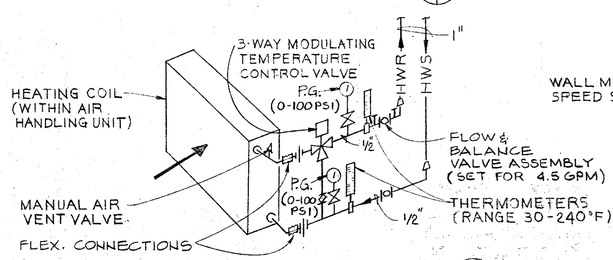

HEATING COIL PIPING SCHEMATIC DETAIL 6
NO SCALE 15|15

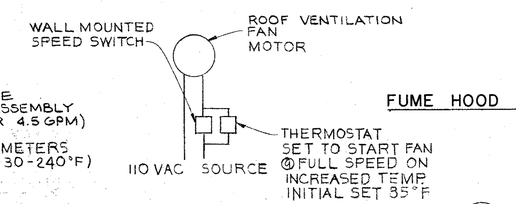

FUME HOOD EXHAUST FAN DETAIL 5
NO SCALE 15|15

CONTROL ROOM FAN CONTROLS DETAIL 7
NO SCALE 15|15

NOTE: FOR FUME HOOD USE 12"ø DUCT WITH TRANSITION TO 15x15" DUCT

NOTES:
1) MODEL NUMBERS SHOWN FOR CEILING AND WALL REGISTERS AND GRILLES ARE THOSE OF TITUS. REFER TO SPECIFICATIONS FOR OTHER MANUFACTURES.
2) LOCATE DUCTWORK ABOVE CEILING.
3) PROVIDE ADJUSTABLE EXTRACTORS AT EACH BRANCH TAKE-OFF TO A SUPPLY OUTLET.

Record Drawing
REGORD DRAWING

Revised	Description	Submit.	Appr'd.	Date
1	FIELD CHANGE			

Refer to Tracing for Latest Revision

Reference Information and Notes:

Record Drawing
*Mess record drawings have been prepared, in part, on the basis of information compiled and furnished by others. Kennedy/Jenks and Chilton is not responsible for any errors or omissions in the information provided by others.
Dated APR. 29, 19 88

GRAPHIC SCALE 1/4"=1'-0" 0 5 10

Designed MSA
Drawn LCS
Checked JHF
Date 1-29-81

Wastewater Plant Improvements C-06-2464
Sausalito - Marin City Sanitary District

Kennedy/Jenks Engineers — San Francisco
Submitted: Walter E. Hamman C5370 Approved: Robert J. Emery

CONTROL BUILDING
HEATING AND VENTILATING

Scale 1/4"=1'-0"
Job No. 0112
Sheet M-15 of

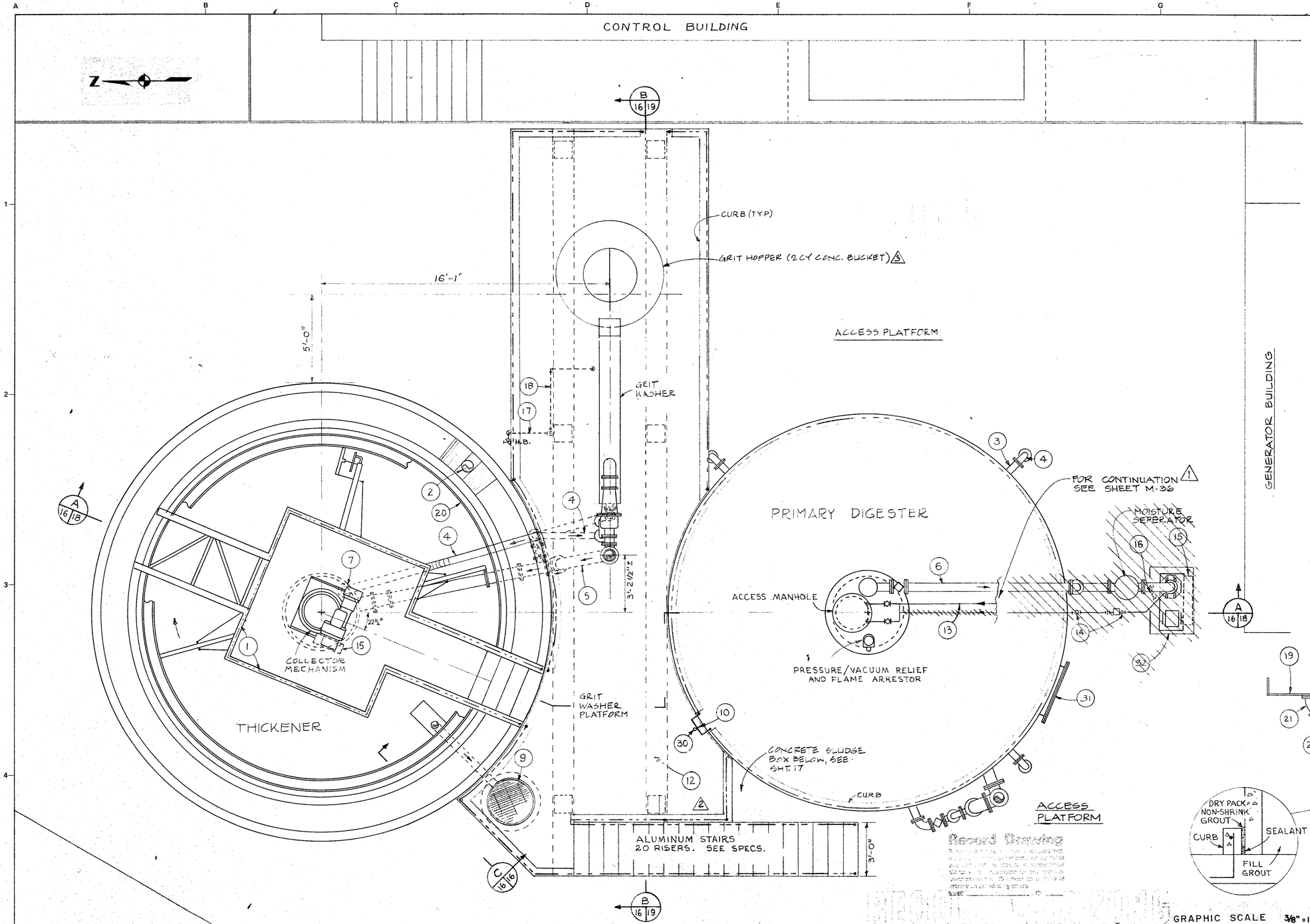

1 MINIMUM CLEARANCE 2-1/2' ALL AROUND DRIVE ASSEMBLY.
2 8" TV-1P SEE SHEET M-17.
3 4" TN-7P
4 4" TV-1P
5 6" TV-1P
6 6" TX-3P
7 4" TV-1P 90° ELL
8 DELETED
9 SUMP COVER. SEE STRUCTURAL DRAWINGS.
10 LADDER AND CAGE, SEE ARCH. DWG.
11 DELETED
12 FOR PIPING THIS AREA SEE SHEET M-17
13 2" TX-3P
14 2" TX-3P 90° ELL
15 CAL-OSHA GUARD
16 2½" TX-3P SLUDGE GAS TO SCRUBBER
17 1-1/4" T.V-1P RECLAIMED WATER TO DEGRITTER SPRAY.
18 3/4" T.V-1P RECLAIMED WATER.
19 SCUM TROUGH. SEE MANUFACTURER'S DWGS FOR DIMENSIONS AND LOCATION.
20 EFFLUENT WEIR. SEE DETAILS 2-5/M-31
21 6" TN-7P 45° ELL. TYP OF 2.
22 6" TN-7P SPOOL SPECIAL W/ CUTOFF FLANGE (MIN. 16"X13"X½"). REFER TO SCUM TROUGH MANUFACTURER'S DWGS FOR LOCATION. MAYBE EITHER CAST-IN-PLACE OR GROUTED IN A KEYED BLOCKOUT W/ NONSHRINK, NON-METALLIC GROUT AT THE CONTRACTOR'S OPTION.
23 CONNECTION THRU WALL. SEE DETAIL 7/16 32
24 6" TN-7P SCUM WITHDRAWAL LINE
25 GROUT FILL BOTTOM TO INVERT OF ITEM 24 W/MIN. SLOPE 1"/FT. TROWEL SMOOTH.
26 4'X4'X9" GROUTING CURB. SEE DETAIL FOR REINFORCEMENT BELOW.
27 30" ASTM C76, CLASS III, WALL C PIPE. TOP TO BE 3/4" BELOW SLAB.
28 RUBBER COUPLING.
~~29 4'X5'X3'3". SEE SPECS.~~
30 RAIL TYPE LADDER SAFETY CLIMB DEVICE. SAF-T-CLIMB BY NORTON COMPANY, SAFETY PRODUCTS DIVISION; EQUIVILANT BY "CLIMBERS BUDDY", SWAGER TOWER CORP, FREMONT, IND; OR EQUAL.
31. ACCESS MANHOLE (TYP). SEE S16
32. SLUDGE GAS COMPRESSOR.

Revised	Description	Submit.	Appr'd.	Date
3	SUBSTITUTION			
2	FIELD CHANGE			
1	CO NO. 35			

Refer to Tracing for Latest Revision

Reference Information and Notes:

Record Drawing
These record drawings have been prepared, in part, on the basis of information compiled and furnished by others. Kennedy/Jenks/Chilton is not responsible for any errors or omissions in this document as a result of information provided by others.
Dated APR. 29, 1988

FOR TYPICAL EQUIPMENT ANCHORAGE SEE SHEET M-24

REFER TO THE NOTE WITH THIS NUMBER

Designed JHF
Drawn JHF
Checked JHF
Date 1-29-81

Wastewater Plant Improvements C-06-2464
Sausalito - Marin City Sanitary District

Kennedy/Jenks Engineers San Francisco
Submitted: Walter F. Hansman C9370
Approved: Robert J. Amey

THICKENER AND PRIMARY DIGESTER TOP PLAN

Scale 3/8"=1'0
Job No. 0112
Sheet M-16 of

25

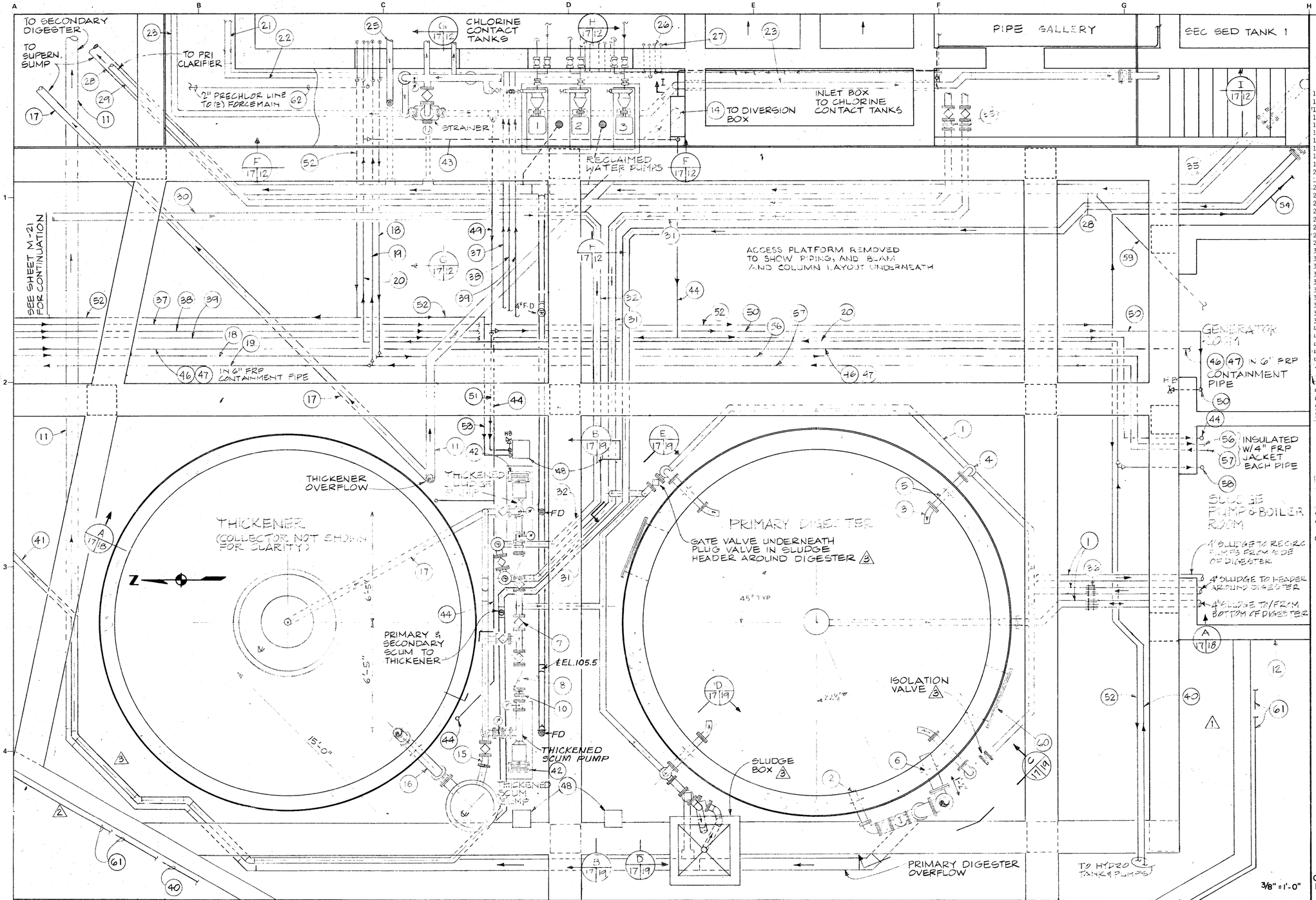

1 4" TV-1P
2 4" TN-7P SPOOL
3 4" TN-7P 45° ELL (TYP. OF 4)
4 4" TN-7P 90° ELL
5 4" X 2'-4" TN-7P SPOOL. (TYP. OF 5)
6 8" TN-7P
7 4" PLUG VALVE (TYP. OF 10)
8 4" BALL CHECK VALVE
9 DELETED
10 4" RUBBER COUPLING (SEE SPECS.)
11 8" TV-1P ~~EL 104.0~~
12 FOR PIPING THIS AREA SEE SHEET M-20
13 8" TV-1P 45° ELL
14 8" TV-1P ELL DROP TO EL. 98.0
15 4" TN-7P - 11-1/4° ELL
16 6" TN-7P
17 6" TV-1P
18 1¼" TX-2P HWR ~~EL. 108.75 ±~~
19 1¼" TX-2P HWS ~~EL. 108.75 ±~~
20 1-1/2" TV-1P POTABLE WATER ~~EL. 108.75 ±~~
21 3/4" TV-1P SAMPLE 6 ~~EL. 108.75 ±~~
22 3/4 TV-1P SAMPLE 5 ~~EL. 108.75 ±~~
23 4" TV-1P RECLAIMED WATER ~~EL. 108.50~~
24 DELETED
25 4" TV-1P SANITARY DRAIN
26 3/4" TV-1P SAMPLE 4
27 3/4" TV-1P SAMPLE 3
28 6" TV-1P SCREENINGS DRAIN EL. VARIES
29 4" TV-1P SECONDARY SLUDGE ~~EL. 106.75~~
30 4" TV-1P PRIMARY SLUDGE ~~EL. 106.75~~
31 4" TV-1P SECONDARY SLUDGE ~~EL. 106.75~~
32 **DELETED**
33 **DELETED**
34 4" TV-1P SECONDARY SCUM ~~EL 106.75~~
35 RUBBER COUPLING
36 4" FLEXIBLE COUPLING
37 1-1/2" TV-1P SULFUR DIOXIDE VACUUM ~~EL. 108.50~~
38 1-1/2" TV-1P CHLORINE VACUUM ~~EL. 108.50~~
39 1-1/2" TV-1P CHLORINE VACUUM ~~EL. 108.50~~
40 2" TV-1P POTABLE WATER
41 4" TV-1P PRIMARY SCUM
42 CAL. OSHA GUARDS TYP. AT ALL SHAFTS
43 TV-1P POTABLE WATER ~~EL 108.75~~
44 3/4" TV-1P NON-POTABLE WATER ~~EL. 106.75~~
45 ~~2¼" TX-3P SLUDGE GAS~~
46 3/4" TX-5P FUEL OIL SUPPLY
47 ~~3/4"~~ TX-5P FUEL OIL RETURN
48 12 X 12" COLUMN ABOVE (TYP. OF 4).
49 1-1/8" T.V-1P RECLAIMED WATER.
50 3/4" T.V-1P RECLAIMED WATER.
51 1-1/4" T.V-1P RECLAIMED WATER.
52 ½" TV-1P INSTRUMENT AIR
53 ½" TV-1P INSTRUMENT AIR TO BUBBLER PANEL 4
54 ½" TV-1P INSTRUMENT AIR TO BUBBLER PANELS 2 AND 7
55 ½" TV-1P INSTRUMENT AIR TO BUBBLER PANEL 3
56 1-1/2" TX-2P HOT WATER RETURN
57 1-1/2" TX-2P HOT WATER SUPPLY
58 3/4" TV-1P POTABLE WATER
59 3" TV-2P DRAIN FROM GEN. BLDG.
60 ACCESS MANHOLE, SEE S-16
61 4" TV-1P SLUDGE GAS SUPPLY & RETURN
62 2" TV-1P PRECHLOR LINE

Record Drawing
APR 22 '85

GRAPHIC SCALE
0 5 10
3/8" = 1'-0"

Revised	Description	Submit.	Appr'd.	Date
3	FIELD CHANGE			
2	CO NO. 23			
1	CO NO. 35			

Refer to Tracing for Latest Revision

Reference Information and Notes:
3 PIPING LAYOUT CHANGED THROUGHOUT BY CONTRACTOR TO CONSOLIDATE SUPPORTS AND AVOID CONFLICTS. THE MAJORITY OF THE CHANGES ARE NOTED ABOVE.

FOR TYPICAL EQUIPMENT ANCHORAGE SEE SHEET M-24
REFER TO THE NOTE WITH THIS NUMBER

Designed JHF
Drawn JHF
Checked JHF
Date 1-24-31

Wastewater Plant Improvements C-06-2464
Sausalito - Marin City Sanitary District
KennedyJenks Engineers **San Francisco**
Submitted: Walter E. Kennedy 6/5/13 Approved: Robert J. Cuney

THICKENER AND PRIMARY DIGESTER BOTTOM PLAN

Scale 3/8"=1'-0"
Job No. 0112
Sheet M-17 of

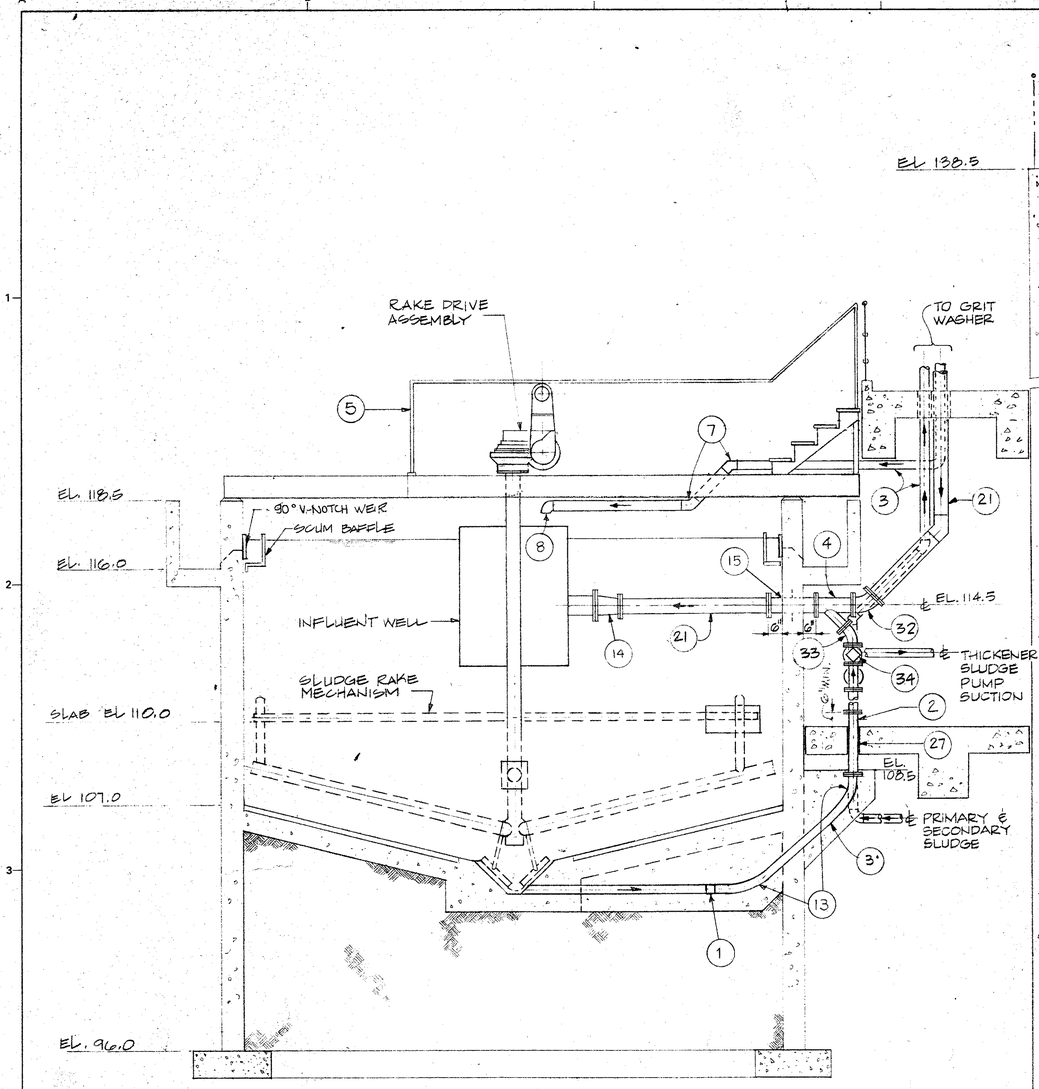

THICKENER

SECTION (A)
SCALE: 3/8"=1'-0" (6/18)
FOR ILLUSTRATION PURPOSES

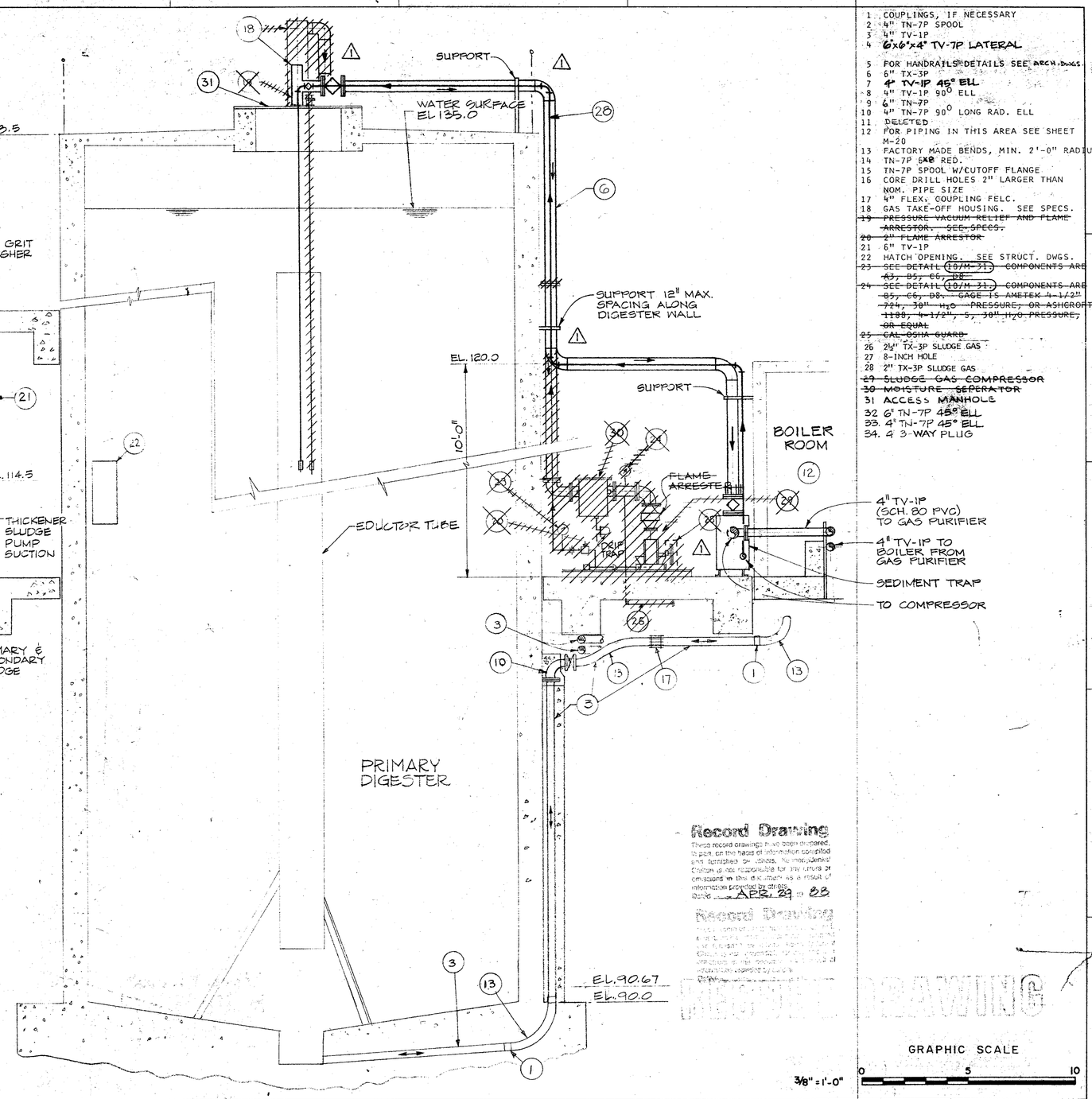

1 COUPLINGS, IF NECESSARY
2 4" TN-7P SPOOL
3 4" TV-1P
4 6"x6"x4" TV-7P LATERAL
5 FOR HANDRAILS DETAILS SEE ARCH. DWGS.
6 6" TX-3P
7 4" TV-1P 45° ELL
8 4" TV-1P 90° ELL
9 6" TN-7P
10 4" TN-7P 90° LONG RAD. ELL
11 DELETED
12 FOR PIPING IN THIS AREA SEE SHEET M-20
13 FACTORY MADE BENDS, MIN. 2'-0" RADIUS
14 TN-7P 5x8 RED.
15 TN-7P SPOOL W/CUTOFF FLANGE
16 CORE DRILL HOLES 2" LARGER THAN NOM. PIPE SIZE
17 4" FLEX. COUPLING FELC.
18 GAS TAKE-OFF HOUSING. SEE SPECS.
~~19 PRESSURE VACUUM RELIEF AND FLAME ARRESTOR. SEE SPECS.~~
~~20 2" FLAME ARRESTOR~~
21 6" TV-1P
22 HATCH OPENING. SEE STRUCT. DWGS.
~~23 SEE DETAIL (10/M-31) COMPONENTS ARE A5, B5, C6, D8.~~
~~24 SEE DETAIL (10/M-31) COMPONENTS ARE B5, C6, D8. GAGE IS AMETEK 4-1/2" 724, 30" H2O PRESSURE, OR ASHCROFT 1188, 4-1/2", S, 30" H2O PRESSURE, OR EQUAL~~
~~25 CAL OSHA GUARD~~
26 2½" TX-3P SLUDGE GAS
27 8-INCH HOLE
28 2" TX-3P SLUDGE GAS
~~29 SLUDGE GAS COMPRESSOR~~
~~30 MOISTURE SEPERATOR~~
31 ACCESS MANHOLE
32 6" TN-7P 45° ELL
33 4" TN-7P 45° ELL
34 4 3-WAY PLUG

Record Drawing
These record drawings have been prepared, in part, on the basis of information compiled and furnished by others. Kennedy/Jenks/Chilton is not responsible for any errors or omissions in this document as a result of information provided by others.
Dated APRIL 29 19 88
Record Drawing
RECORD DRAWING

GRAPHIC SCALE
3/8" = 1'-0"
0 5 10

Revised	Description	Submit.	Appr'd.	Date
⚠	CO NO. 35			

Refer to Tracing for Latest Revision

Reference Information and Notes:

FOR TYPICAL EQUIPMENT ANCHORAGE SEE SHEET M-24

REFER TO THE NOTE WITH THIS NUMBER

Designed	RDB/JAF
Drawn	CB/JHF
Checked	JHF
Date	1-29-81

Wastewater Plant Improvements C-06-2464
Sausalito - Marin City Sanitary District

Kennedy/Jenks Engineers San Francisco

Submitted: Walter F. Hamman 03/30 Approved: Robert J. Avery

THICKENER AND PRIMARY DIGESTER SECTIONS

Scale	3/8"=1'-0"
Job No.	0112
Sheet	M-18
of	

27

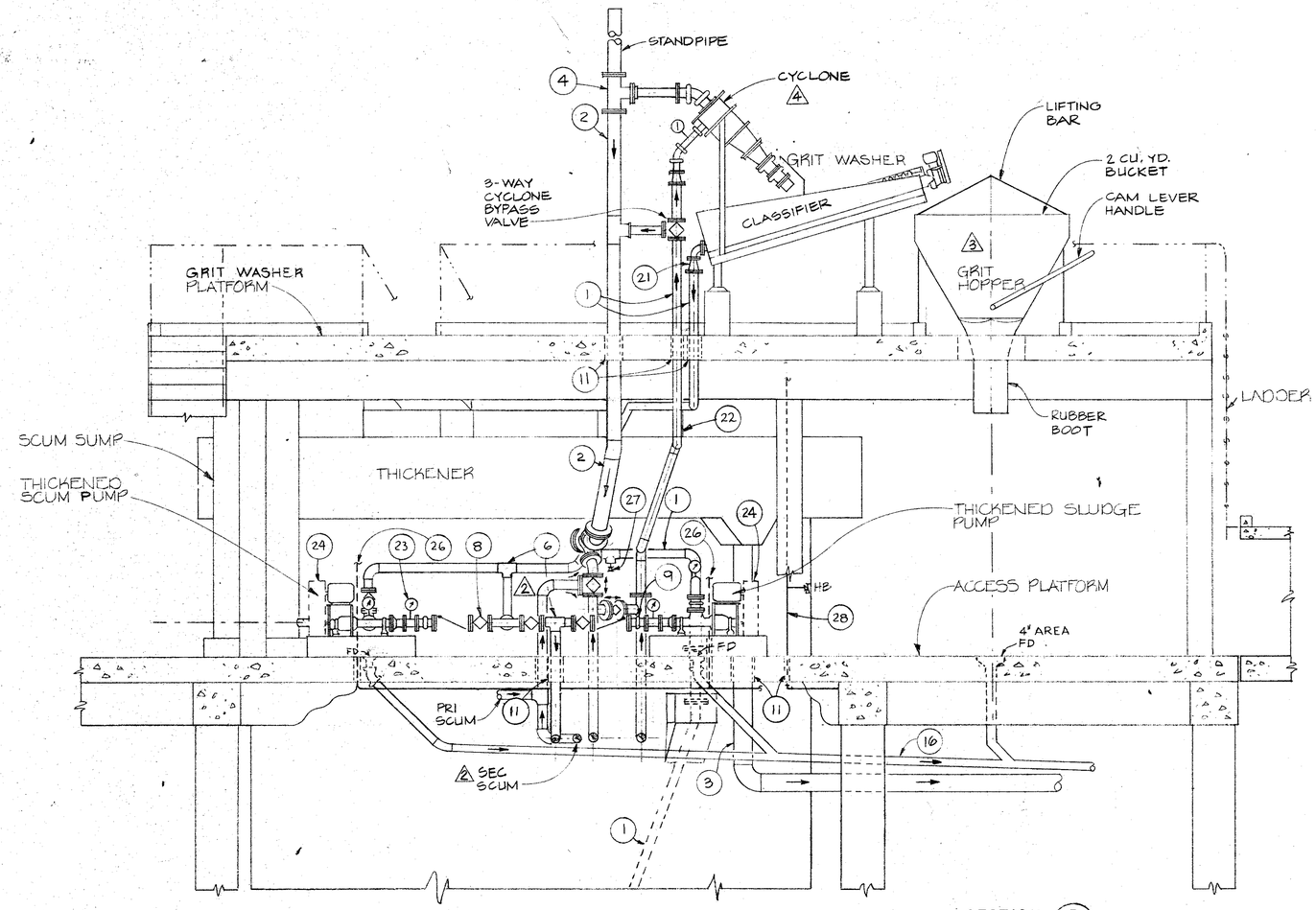

SECTION B
SCALE: 3/8"=1'-0" 16|19

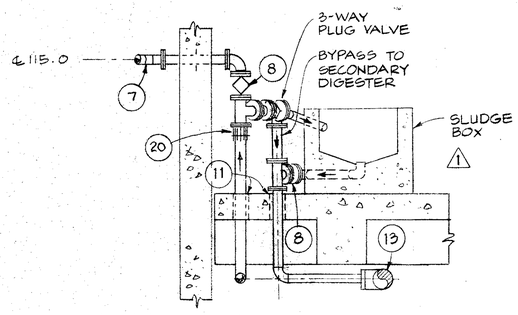

SECTION D
SCALE: 3/8"=1'-0" 17|19

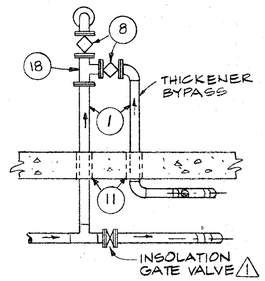

SECTION E
SCALE: 3/8"=1'-0" 17|19

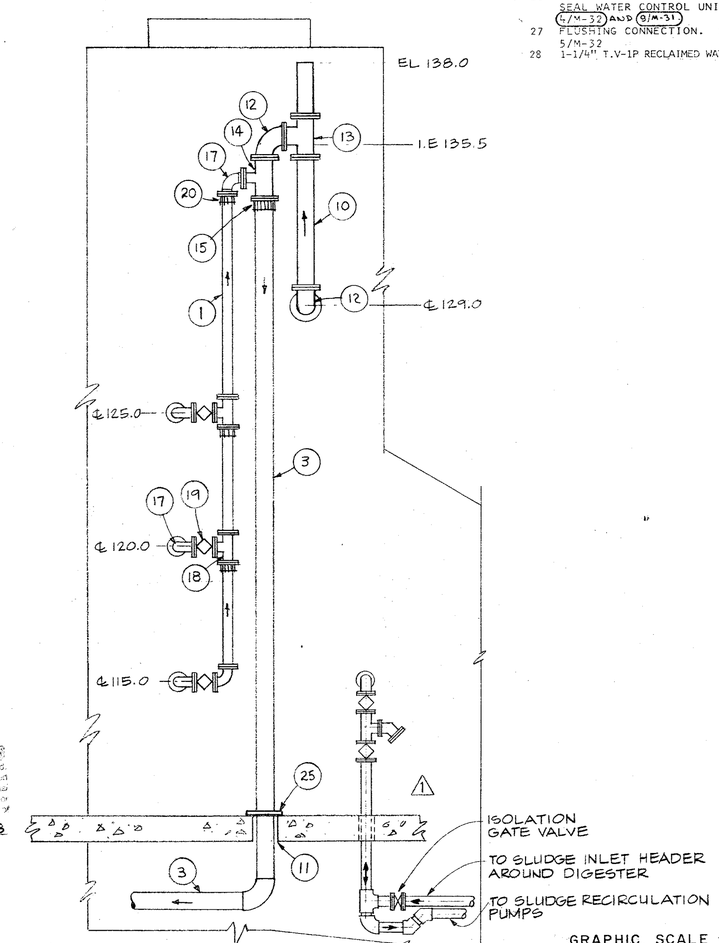

SECTION C
SCALE: 3/8"=1'-0" 17|19

GRAPHIC SCALE
3/8"=1'-0" 0 5 10

1 4" TV-1P
2 6" TV-1P
3 8" TV-1P
4 6" TN-7P TEE
5 3" TV-1P
6 4" TV-1P TEE
7 4" TN-7P
8 4" PLUG VALVE. SEE SPECS.
9 4" EXPANSION JOINT (TYP. OF 4)
10 8" TN-7P
11 HOLE THRU SLAB
12 8" TN-7P 90° ELL
13 8" TN-7P TEE
14 8" X 8" X 4" TN-7P TEE
15 8" F.C.A.
16 4" TV-2P DRAIN PIPE & FITTINGS
17 4" TN-7P 90° ELL
18 4" TN-7P TEE
19 4" PLUG VALVE (TYP. OF 3)
20 4" F.C.A.
21 TV-1P 3" X 4" REDUCING COUPLING
22 NOTE: WALKWAY AND MECHANISM SUPPORT AND RAKE MECHANISM NOT SHOWN
23 GAGE ASSEMBLY. SEE DETAIL 10/19 31
24 CAL-OSHA GUARD. TYP. FOR ALL DRIVES
25 DUCTILE IRON, CLASS D FLOOR SUPPORT FLANGE, NON-BOLTED
26 3/4" TV-1P NON-POTABLE WATER. INSTALL SEAL WATER CONTROL UNIT PER DETAILS 4/M-32 AND 9/M-31
27 FLUSHING CONNECTION. SEE DETAIL 5/M-32
28 1-1/4" T.V-1P RECLAIMED WATER BEHIND COLUMN.

Record Drawing
Dated APR 29 1988

Revised	Description	Submit.	Appr'd.	Date
4	AS-BUILT CONFIGURATION			
3	SUBSTITUTION			
2	C.O. 35			
1	FIELD CHANGE			

Refer to Tracing for Latest Revision

Reference Information and Notes:

FOR TYPICAL EQUIPMENT ANCHORAGE SEE SHEET M-24

REFER TO THE NOTE WITH THIS NUMBER

Designed JHF
Drawn JHF
Checked JHF
Date 1-29-81

Wastewater Plant Improvements C-06-2464
Sausalito - Marin City Sanitary District

Kennedy/Jenks Engineers San Francisco

Submitted: Walter Hansman CS370
Approved: Robert J. Ivey

THICKENER AND PRIMARY DIGESTER-SECTIONS

Scale 3/8"=1'0
Job No. 0112
Sheet M-19 of

28

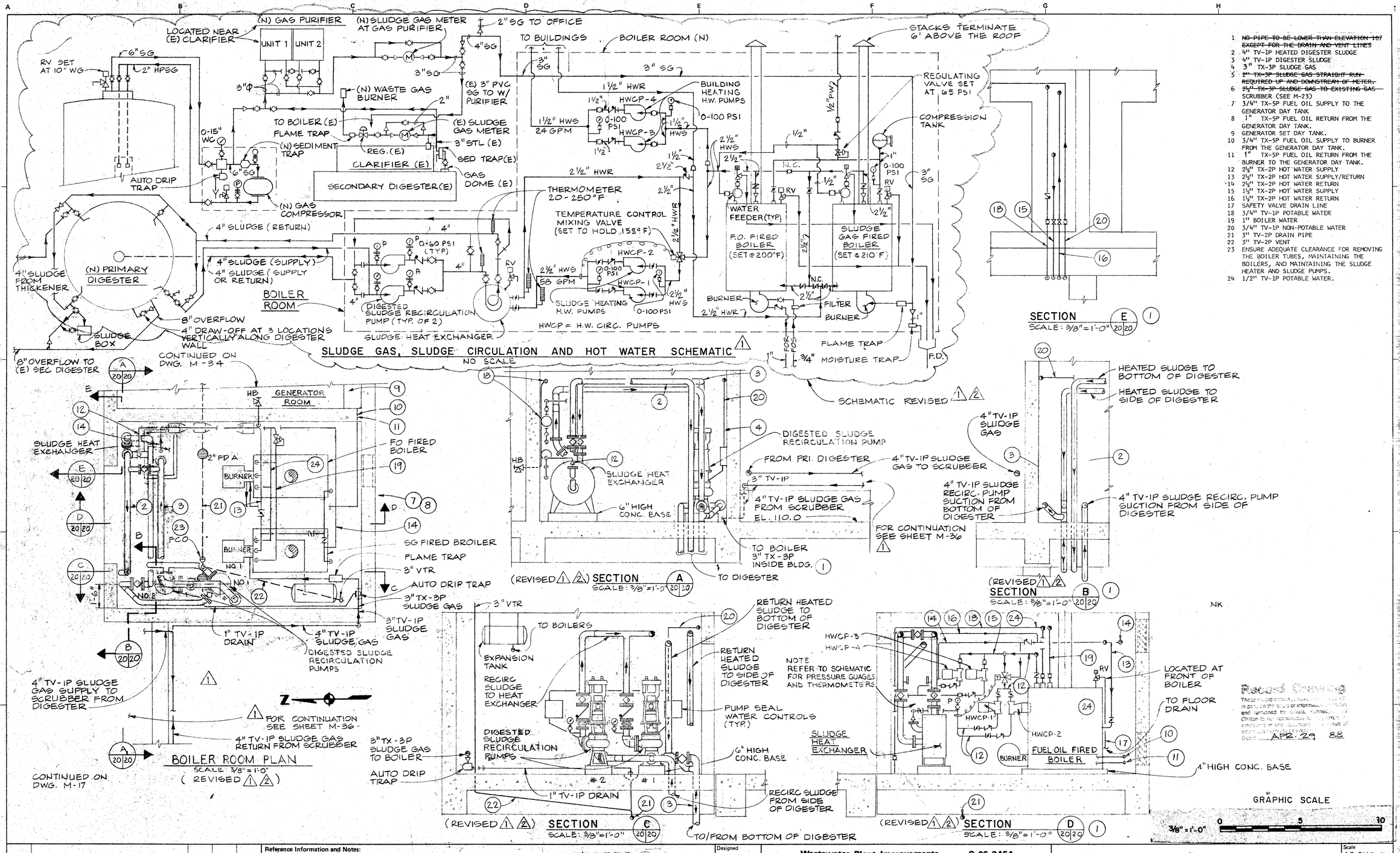

1. ~~NO PIPE TO BE LOWER THAN ELEVATION 107 EXCEPT FOR THE DRAIN AND VENT LINES~~
2. 4" TV-1P HEATED DIGESTER SLUDGE
3. 4" TV-1P DIGESTER SLUDGE
4. 3" TX-3P SLUDGE GAS
5. ~~2" TX-3P SLUDGE GAS STRAIGHT RUN REQUIRED UP AND DOWNSTREAM OF METER.~~
6. 2½" TX-3P SLUDGE GAS TO EXISTING GAS SCRUBBER (SEE M-23)
7. 3/4" TX-5P FUEL OIL SUPPLY TO THE GENERATOR DAY TANK
8. 1" TX-5P FUEL OIL RETURN FROM THE GENERATOR DAY TANK.
9. GENERATOR SET DAY TANK.
10. 3/4" TX-5P FUEL OIL SUPPLY TO BURNER FROM THE GENERATOR DAY TANK.
11. 1" TX-5P FUEL OIL RETURN FROM THE BURNER TO THE GENERATOR DAY TANK.
12. 2½" TX-2P HOT WATER SUPPLY
13. 2½" TX-2P HOT WATER SUPPLY/RETURN
14. 2½" TX-2P HOT WATER RETURN
15. 1½" TX-2P HOT WATER SUPPLY
16. 1½" TX-2P HOT WATER RETURN
17. SAFETY VALVE DRAIN LINE
18. 3/4" TV-1P POTABLE WATER
19. 1" BOILER WATER
20. 3/4" TV-1P NON-POTABLE WATER
21. 3" TV-2P DRAIN PIPE
22. 3" TV-2P VENT
23. ENSURE ADEQUATE CLEARANCE FOR REMOVING THE BOILER TUBES, MAINTAINING THE BOILERS, AND MAINTAINING THE SLUDGE HEATER AND SLUDGE PUMPS.
24. 1/2" TV-1P POTABLE WATER.

Record Drawing
These record drawings or information ... is based in part on the plans or information ... and furnished by others. Kennedy/Jenks/Chilton is not responsible for ... errors or omissions in the information ... result of ... information.
Date: APR '29 85

Revised	Description	Submit.	Appr'd.	Date
2	FIELD CHANGE			
1	CO NO. 35			

Refer to Tracing for Latest Revision

Reference Information and Notes:

Record Drawing
RECORD DRAWING

FOR TYPICAL EQUIPMENT ANCHORAGE SEE SHEET M-24

REFER TO THE NOTE WITH THIS NUMBER

Designed	MSA
Drawn	EJV
Checked	JHF
Date	1-29-81

Wastewater Plant Improvements **C-06-2464**
Sausalito - Marin City Sanitary District

Kennedy/Jenks Engineers **San Francisco**

Submitted: Approved:

C9370

BOILER ROOM PLAN AND SECTIONS

Scale	AS SHOWN
Job No.	0112
Sheet	M-20
of	

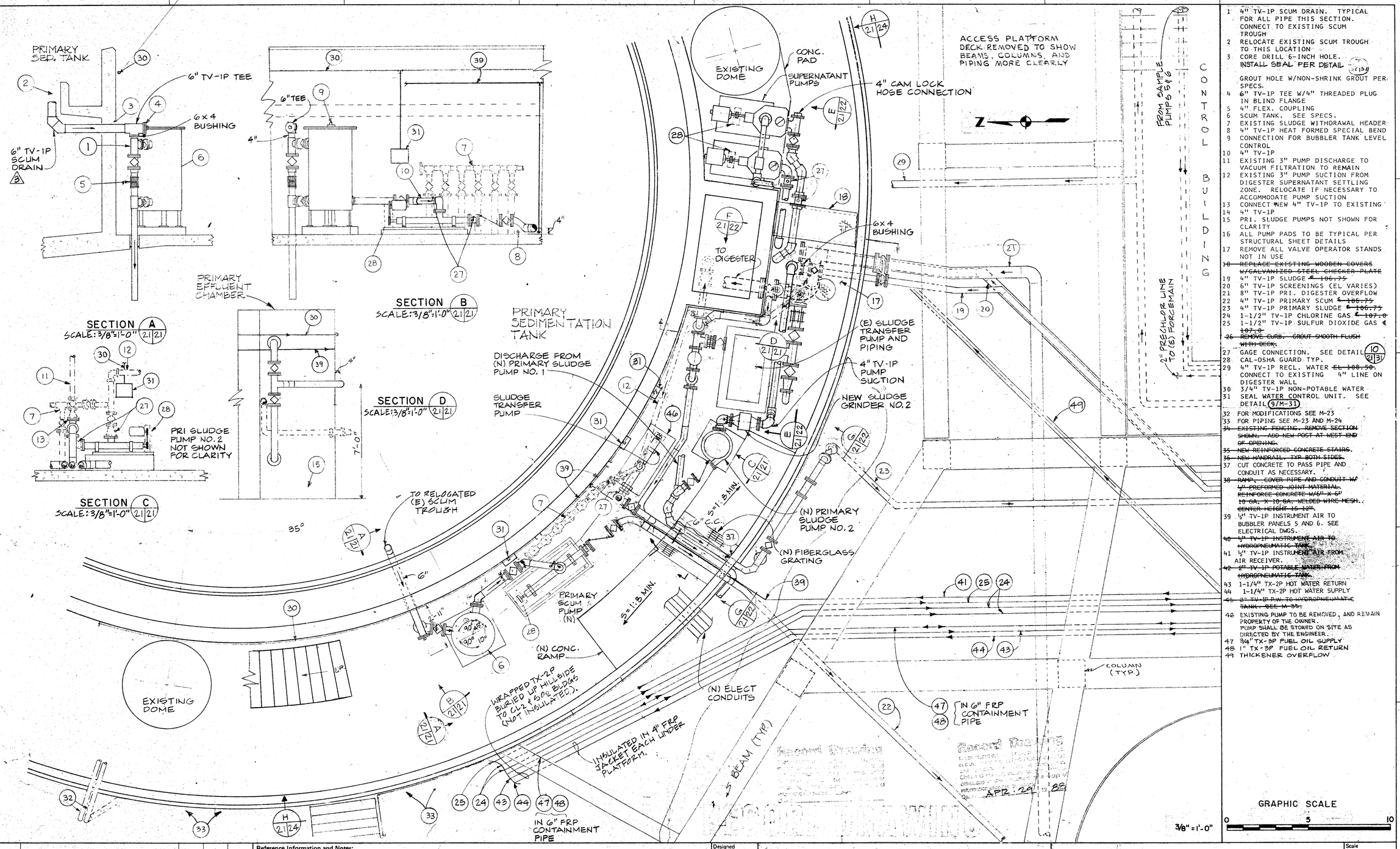

1. 4" TV-1P SCUM DRAIN. TYPICAL FOR ALL PIPE THIS SECTION. CONNECT TO EXISTING SCUM TROUGH
2. RELOCATE EXISTING SCUM TROUGH TO THIS LOCATION
3. CORE DRILL 6-INCH HOLE. INSTALL SEAL PER DETAIL 2/M-30 GROUT HOLE W/NON-SHRINK GROUT PER SPECS.
4. 6" TV-1P TEE W/4" THREADED PLUG IN BLIND FLANGE
5. 4" FLEX. COUPLING
6. SCUM TANK. SEE SPECS.
7. EXISTING SLUDGE WITHDRAWAL HEADER
8. 4" TV-1P HEAT FORMED SPECIAL BEND
9. CONNECTION FOR BUBBLER TANK LEVEL CONTROL
10. 4" TV-1P
11. EXISTING 3" PUMP DISCHARGE TO VACUUM FILTRATION TO REMAIN
12. EXISTING 3" PUMP SUCTION FROM DIGESTER SUPERNATANT SETTLING ZONE. RELOCATE IF NECESSARY TO ACCOMMODATE PUMP SUCTION
13. CONNECT NEW 4" TV-1P TO EXISTING 4" TV-1P
14. PRI. SLUDGE PUMPS NOT SHOWN FOR CLARITY
15. ALL PUMP PADS TO BE TYPICAL PER STRUCTURAL SHEET DETAILS
16. REMOVE ALL VALVE OPERATOR STANDS NOT IN USE
17. ~~REPLACE EXISTING WOODEN COVERS W/GALVANIZED STEEL CHECKER PLATE~~
18. 4" TV-1P SLUDGE ~~@ 106.75~~
19. 6" TV-1P SCREENINGS (EL VARIES)
20. 8" TV-1P PRI. DIGESTER OVERFLOW
21. 4" TV-1P PRIMARY SCUM ~~@ 106.75~~
22. 4" TV-1P PRIMARY SLUDGE ~~@ 106.75~~
23. 1-1/2" TV-1P CHLORINE GAS ~~@ 107.0~~
24. 1-1/2" TV-1P SULFUR DIOXIDE GAS ~~@ 107.0~~
25. ~~REMOVE CURB. GROUT SMOOTH FLUSH WITH DECK.~~
26. GAGE CONNECTION. SEE DETAIL 10/21/31
27. CAL-OSHA GUARD TYP.
28. 4" TV-1P RECL. WATER ~~EL 108.50.~~ CONNECT TO EXISTING 4" LINE ON DIGESTER WALL
29. 3/4" TV-1P NON-POTABLE WATER
30. SEAL WATER CONTROL UNIT. SEE DETAIL 9/M-31
31. FOR MODIFICATIONS SEE M-23
32. FOR PIPING SEE M-23 AND M-24
33. ~~EXISTING FENCING. REMOVE SECTION SHOWN. ADD NEW POST AT WEST END OF OPENING.~~
34. ~~NEW REINFORCED CONCRETE STAIRS.~~
35. ~~NEW HANDRAIL, TYP BOTH SIDES.~~
36. CUT CONCRETE TO PASS PIPE AND CONDUIT AS NECESSARY.
37. ~~RAMP. COVER PIPE AND CONDUIT W/ 4" PREFORMED JOINT MATERIAL. REINFORCE CONCRETE W/6" x 6" 10 GA. X 10 GA. WELDED WIRE MESH. CENTER HEIGHT IS 12".~~
38. 1" TV-1P INSTRUMENT AIR TO BUBBLER PANELS 5 AND 6. SEE ELECTRICAL DWGS.
39. ~~1" TV-1P INSTRUMENT AIR TO HYDROPNEUMATIC TANK.~~
40. 1" TV-1P INSTRUMENT AIR FROM AIR RECEIVER.
41. ~~2" TV-1P POTABLE WATER FROM HYDROPNEUMATIC TANK.~~
42. 1-1/4" TX-2P HOT WATER RETURN
43. 1-1/4" TX-2P HOT WATER SUPPLY
44. ~~2" TV-1P P.W. TO HYDROPNEUMATIC TANK. SEE M-35.~~
45. EXISTING PUMP TO BE REMOVED, AND REMAIN PROPERTY OF THE OWNER. PUMP SHALL BE STORED ON SITE AS DIRECTED BY THE ENGINEER.
46. 3/4" TX-3P FUEL OIL SUPPLY
47. 1" TX-3P FUEL OIL RETURN
48. THICKENER OVERFLOW

GRAPHIC SCALE 0 5 10

3/8" = 1'-0"

Revised	Description	Submit.	Appr'd.	Date
3	C.O. 44 FIELD CHANGE			
2				
1	C.O. 45			

Refer to Tracing for Latest Revision

Reference Information and Notes:

1. PIPING & PUMPS AROUND (E) PLANT CHANGED THROUGHOUT, THE MAJORITY OF THE CHANGES ARE NOTED ABOVE.
2. PIPING UNDER ACCESS PLATFORM CHANGED BY CONTRACTOR TO CONSOLIDATE SUPPORTS & AVOID CONFLICTS. THE MAJORITY OF THE CHANGES ARE NOTED ABOVE

FOR TYPICAL EQUIPMENT ANCHORAGE SEE SHEET M-24

(1) REFER TO THE NOTE WITH THIS NUMBER

Designed	JHF
Drawn	JHF
Checked	JHF
Date	1-29-81

Wastewater Plant Improvements C-06-2464
Sausalito - Marin City Sanitary District

Kennedy/Jenks Engineers — San Francisco

Submitted: Walter Skinner 09370 — Approved: Fred J. Owen

PRIMARY STRUCTURE MODIFICATIONS

Scale	3/8"=1'-0"
Job No.	0112
Sheet	M-21
of	

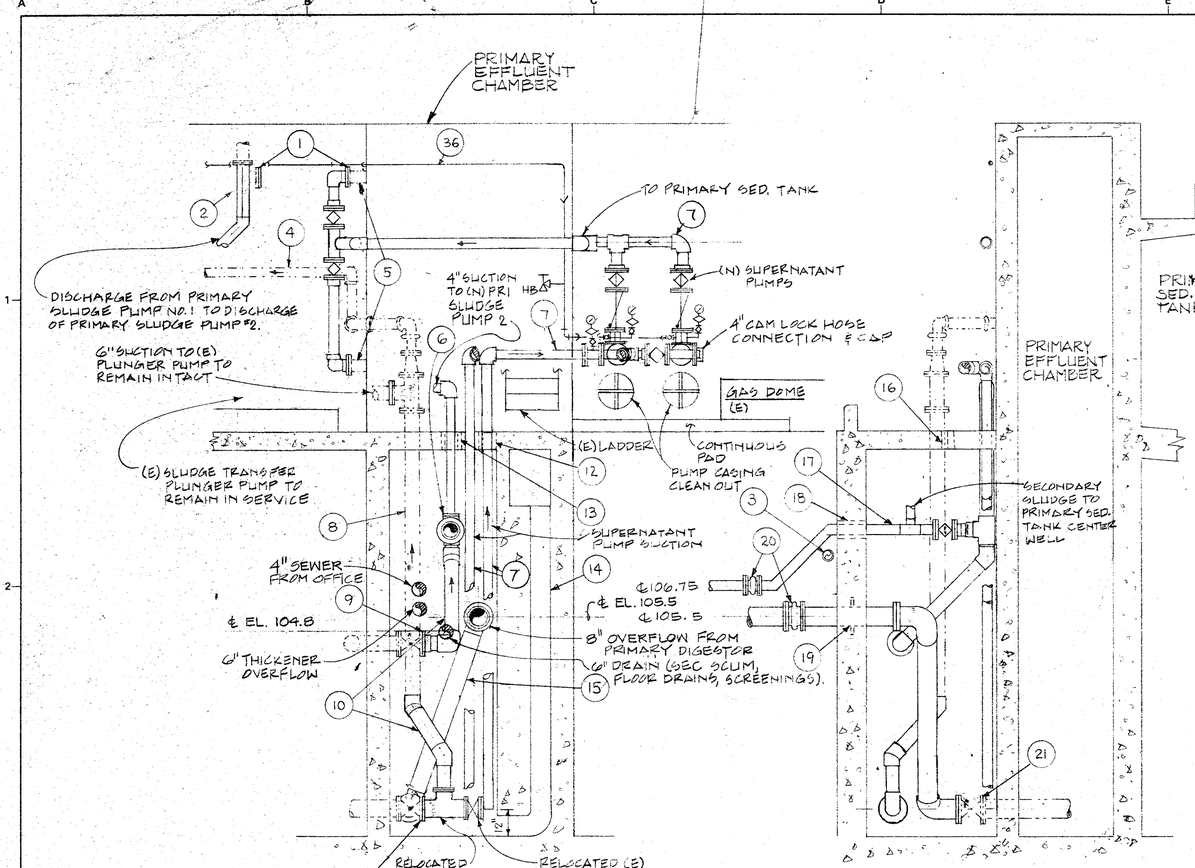

SECTION E
SCALE: 3/8"=1'-0" (21|22)
(REVISED 1)

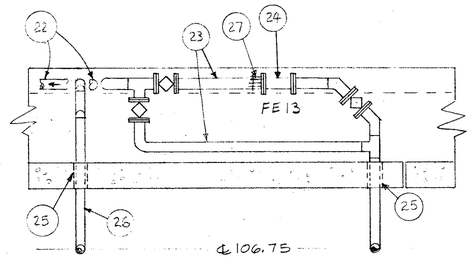

SECTION G
SCALE: 3/8"=1'-0" (21|22)

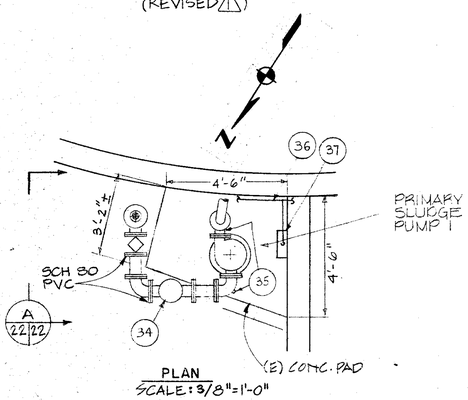

PLAN
SCALE: 3/8"=1'-0"

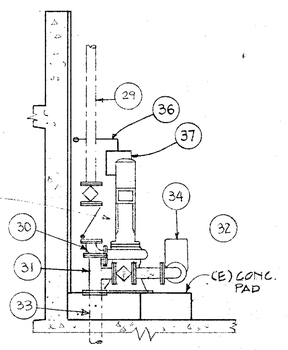

SECTION F
SCALE: 3/8"=1'-0" (21|22)
(REVISED 1)

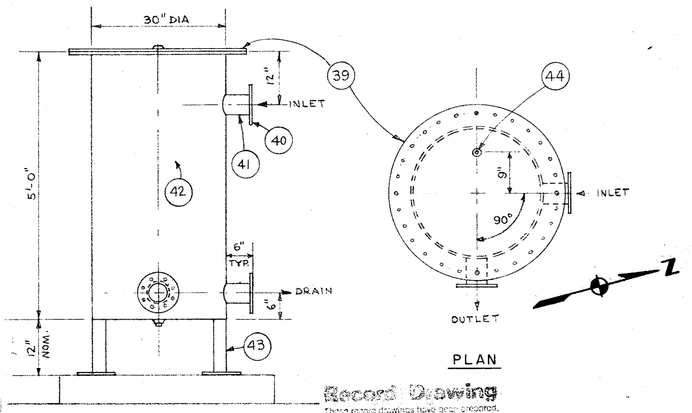

ELEVATION

PLAN

PRIMARY SCUM TANK DETAIL
SCALE: 3/8"=1'-0" (1 22|22)

3/8"=1'-0"

1 REMOVE PIPING BETWEEN THESE POINTS. AT SIDE TEE OUTLET INSTALL 4" D.I. BLIND FLANGE **AT EACH END.**
2 REMOVE EXISTING PIPING BELOW THIS POINT
3 4" TV-1P. RELOCATED RECLAIMED WATER LINE. EL 107.75
4 EXISTING 4" DIGESTED SLUDGE TRANSFER PUMP SUCTION
5 EXISTING 4" CONNECTIONS TO PRI. EFF. WELL (TOP) AND PST INLET (BOTTOM)
6 6"X 4" TV-1P BUSHING
7 4" TV-1P
8 EXISTING 6" PVC LINE
9 EXISTING 6" GATE VALVE TO P.S.T. SLUDGE HOPPER CONNECT NEW PIPING TO IT.
10 6" TV-1P
11 EXISTING 6" GATE VALVE TO DIGESTED SLUDGE DRAWOFF IN SUPERNATANT STORAGE PORTION OF SECONDARY DIGESTER. CONNECT NEW PIPING TO IT
12 CUT SLAB AND MAKE 8 X 18" OPENING
13 CORE DRILL 9" HOLE
14 EXISTING 8" CMP SUPERNATANT OVERFLOW
15 8" TV-1P PRI. DIGESTER OVERFLOW
16 CORE DRILL HOLE FOR VALVE T-HANDLE
17 4" TV-1P SECONDARY SLUDGE
18 CORE DRILL 6" HOLE
19 MAKE WALL OPENING FOR 8" TN-7P. GROUT IN PIPE W/APPROVED NON-SHRINK GROUT
20 RUBBER COUPLING
21 CONNECT NEW 8" TV-1P TO EXISTING 8" GATE VALVE FOR PRIMARY DIGESTER OVERFLOW FEED TO SECONDARY DIGESTER
22 ~~CONNECT TO EXISTING~~ DIGESTED SLUDGE TRANSFER PIPING 4" TV-1P
23 4" TV-1P PRIMARY SLUDGE
24 FLOW METER
25 MAKE 6" HOLE
26 4" TV-1P PRIMARY SCUM
27 4" F.C.A.: FUSION EPOXY LINED AND COATED
28 ~~REMOVE EXISTING PAD AND CONSTRUCT NEW PAD. HEIGHT TO SUIT PUMP~~
29 CONNECT TO EXISTING 4" PVC
30 4" TN-7P ELL
31 6 X 4" TN-7P TEE
32 ALL SUCTION PIPING IS TN-7P
33 EXISTING 6" SLUDGE WITHDRAWAL
34 EXISTING COMMUTOR TO BE SUPPLIED BY THE OWNER
35 GAGE CONNECTIONS. SEE DETAIL (10/M-31)
36 3/4" TV-1P NON-POTABLE WATER
37 SEAL WATER CONTROL UNIT. SEE DETAIL (9/M-31.)
38 ½" TV-1P INSTRUMENT AIR TO BUBBLER PANEL 6
39 COVER PLATE. 3/16" AISI TYPE 316 SS PLATE, 39-3/4" DIAMETER, DRILLED FOR ANSI B16.5 FLANGE, 30-INCH SIZE.
40 AISI TYPE 316 SS, 4-INCH, CLASS B FLANGE PER ANSI B16.5 (TYP OF 3).
41 AISI TYPE 316 SS, 4-INCH, SCHED 40 PIPE. USE WRAPPER PLATES TO WELD THESE PIPES TO THE TANK (ITEM 42)
42 AISI TYPE 316 SS TANK, 30-INCH DIAMETER, 3/16-INCH WALL THICKNESS. WELD BOSS TO THE BOTTOM CENTER OF THE TANK EXTERIOR. DRILL AND TAP FOR 1/2-INCH NPT PLUG. SCREW IN 1/2-INCH PVC PLUG.
43 PROVIDE SUPPORT LEGS AS NECESSARY TO RESIST ALL LOADS, INCLUDING ZONE 4 SEISMIC. TANK COULD BE FILLED TO THE TOP WITH SCUM (S.G.= 1.0) SUPPORT LEGS TO BE BOLTED TO THE PAD ONLY.
44 BUBBLER TUBE CONNECTION. WELD BOSS TO THE TOP AND BOTTOM SIDES OF ITEM 39 AT THE LOCATION SHOWN. DRILL THROUGH AND TAP FOR 1/4-INCH NPT STAINLESS STEEL BUBBLER TUBE.
45 ALL BOLTS, NUTS AND WASHERS TO BE AISI TYPE 316 SS.

GRAPHIC SCALE
0 5 10

Record Drawing
These record drawings have been prepared, in part, on the basis of information compiled and furnished by others. Kennedy/Jenks Engineers is not responsible for any errors or omissions in this document as a result of information provided by others.
Dated APR '84 by BB

Revised	Description	Submit.	Appr'd.	Date
1	C.O. NO. 45			

Refer to Tracing for Latest Revision

Reference Information and Notes:

FOR TYPICAL EQUIPMENT ANCHORAGE SEE SHEET M-24
REFER TO THE NOTE WITH THIS NUMBER ◯

Designed JHF
Drawn JHF
Checked JHF
Date 1-29-81

Wastewater Plant Improvements **C-06-2464**
Sausalito - Marin City Sanitary District
Kennedy/Jenks Engineers **San Francisco**
Submitted: Walter E. Lassman C9370 Approved: Robert J. Cerutti

PRIMARY STRUCTURE MODIFICATIONS

Scale 3/8"=1'-0"
Job No. 0112
Sheet M-22 of

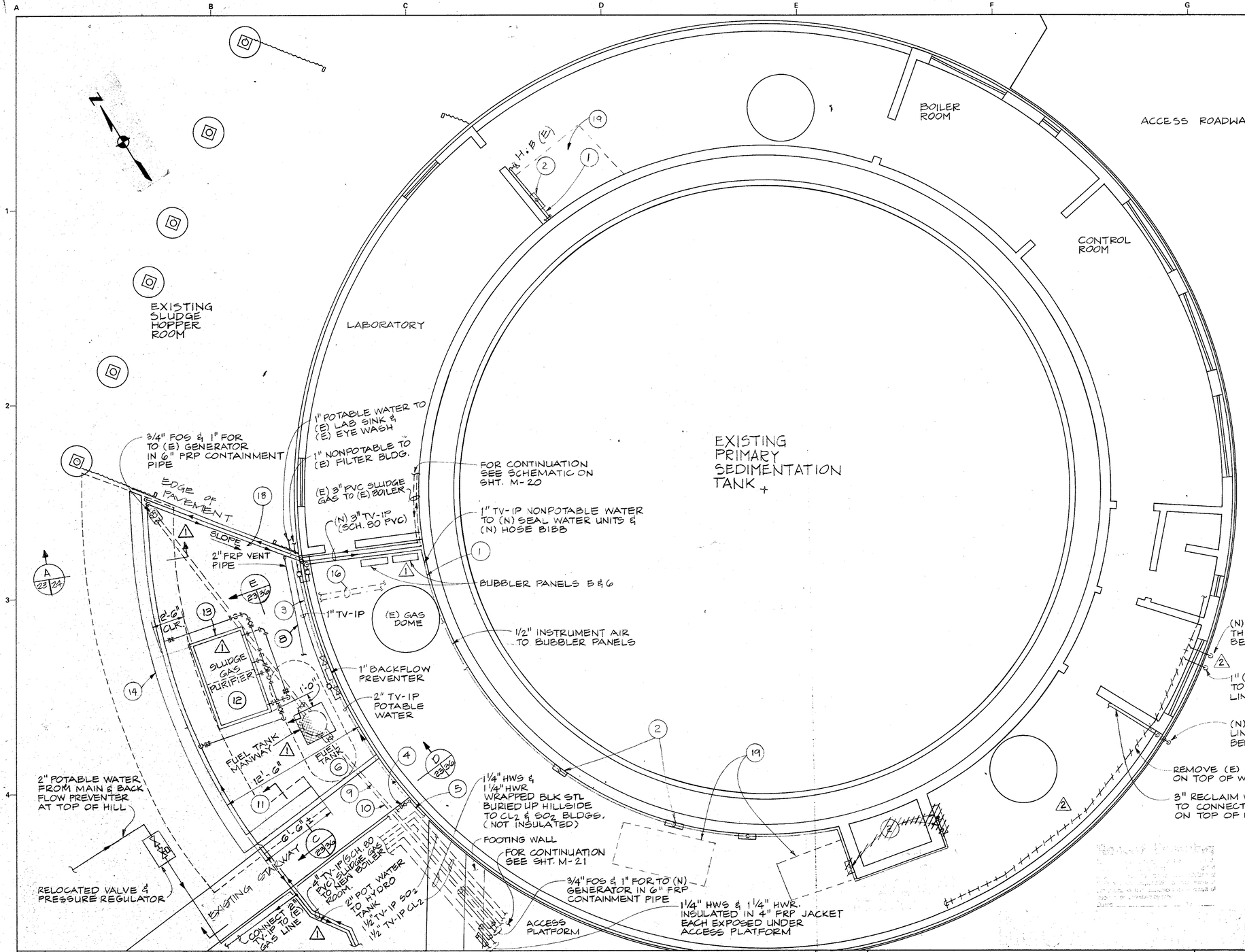

1 1" TV-1P NON-POTABLE WATER. FOR CONTINUATION SEE M-24.
2 SEAL WATER CONTROL UNIT TYPICAL. SEE DETAIL 9/M-31. LOCATIONS APPROXIMATE.
3 1" TV-1P POTABLE WATER. FOR CONTINUATION SEE M-24.
4 2" TV-1P POTABLE WATER FROM STAIRWAY SEE DETAIL 11/M-29.
5 2" TV-1P POTABLE WATER. SEE SECTION H/M-24.
6 FUEL TANK. SEE DETAILS ON M-~~35~~
7 ~~3" TX-4P FUEL FILL LINE. BURIED 1 FT. BELOW SURFACE.~~
8 2" ~~TX-4P~~ VENT LINE TO EL 120.0.
9 3/4" TX-5P FUEL SUPPLY.
10 1" TX-5P FUEL RETURN.
11 BACKFILL THE ENTIRE AREA TO THE PLATFORM WALL W/STRUCTURAL BACKFILL MATERIAL
12 ~~EXISTING GAS SCRUBBER. RELOCATED TO NEW POSITION. CHANGE PIPING TO FIT NEW ALIGNMENT.~~
13 NEW CONCRETE SUPPORT PAD. GROUT UP GAS SCRUBBER MIN. 1/4 IN. ABOVE PAD CONNECT WITH 3/4" A.B. H.D. GALVANIZED.
14 NEW REINFORCED CONCRETE RETAINING WALL. HEIGHT TO BE 1 FOOT MINIMUM ABOVE H.L. ON BACKSIDE OF WALL. CLEAR STAIRS AND BUILDING WALL BY 6 INCHES. REMOVE EXISTING TIMBER RETAINING WALL.
15 ~~2" TX-3P SLUDGE GAS CROSS CONNECTION. CONNECT TO GAS SCRUBBER DISCHARGE TO THE EXISTING BOILER.~~
16 EXISTING SLUDGE GAS LINES. TO BE REMOVED. ~~SEE NOTE 12.~~
17 ~~PAINT YELLOW WARNING STRIPES ON THE FLOOR UNDER THE EXISTING~~ SLUDGE HOPPER.
18 CONCRETE PAVEMENT. 6 INCHES OF CONCRETE REINFORCED W/#4 REBAR @ 12" E.W. ON TOP OF 6 INCHES OF AGGREGATE BASE. LEAVE HOLE FOR TANK ACCESS PER FUEL OIL TANK DETAILS., ON M-35.
19 EXISTING PUMPS TO BE REMOVED. REPLACE W/NEW PUMPS & ~~CONCRETE PADS~~.
~~20 SEE THIS ON M-29~~

FOR TYPICAL EQUIPMENT ANCHORAGE SEE SHEET M-24
REFER TO THE NOTE WITH THIS NUMBER

Revised	Description	Submit.	Appr'd.	Date
2	CO NO. 45			
1	CO NO. 35			

Refer to Tracing for Latest Revision

Reference Information and Notes:

Designed JHF
Drawn JHF
Checked JHF
Date 1-29-81

Wastewater Plant Improvements C-06-2464
Sausalito - Marin City Sanitary District

Kennedy/Jenks Engineers **San Francisco**

Submitted: Walter E. Eastman 6337C Approved: Robert J. Emery

PRIMARY STRUCTURE
MODIFICATIONS AND DELETIONS

Scale 1/4"=1'0"
Job No. 0112
Sheet M-23 of

Record Drawing
These record drawings have been prepared in part on the basis of information compiled and furnished by others. Kennedy/Jenks/Chilton is not responsible for any errors or omissions in this document as a result of information provided by others.
Dated APR 27 19 82

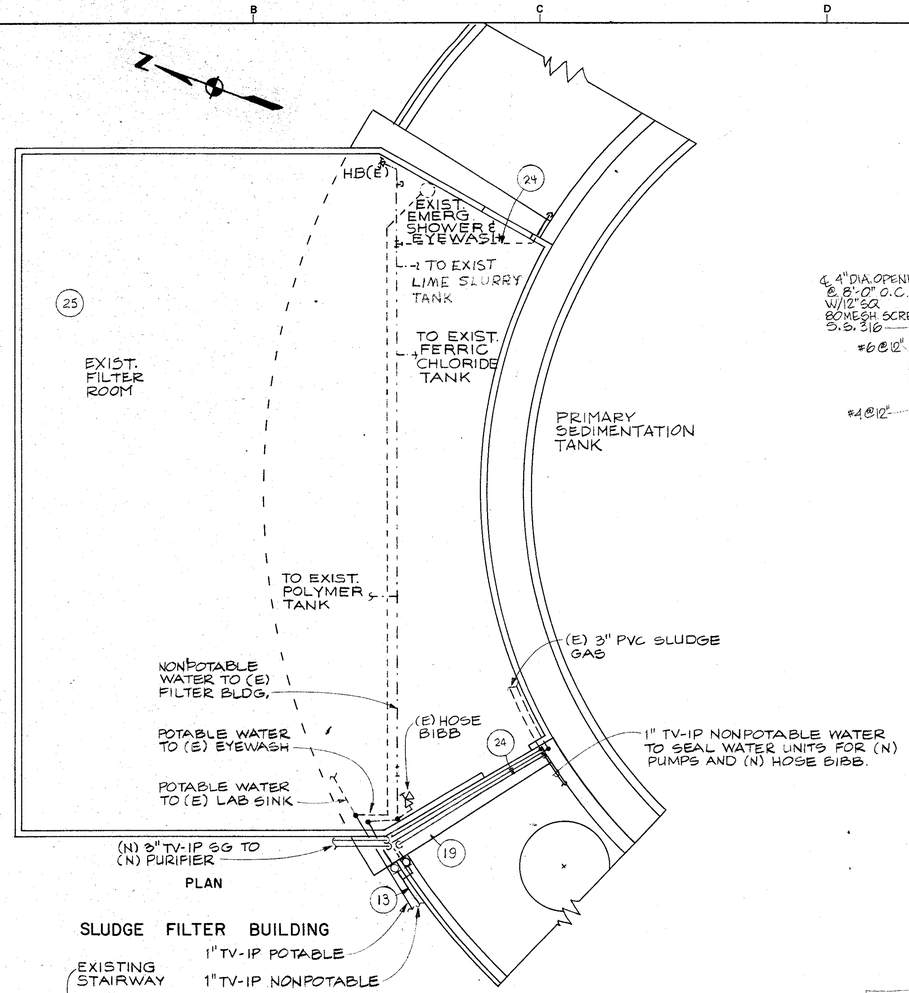

SLUDGE FILTER BUILDING

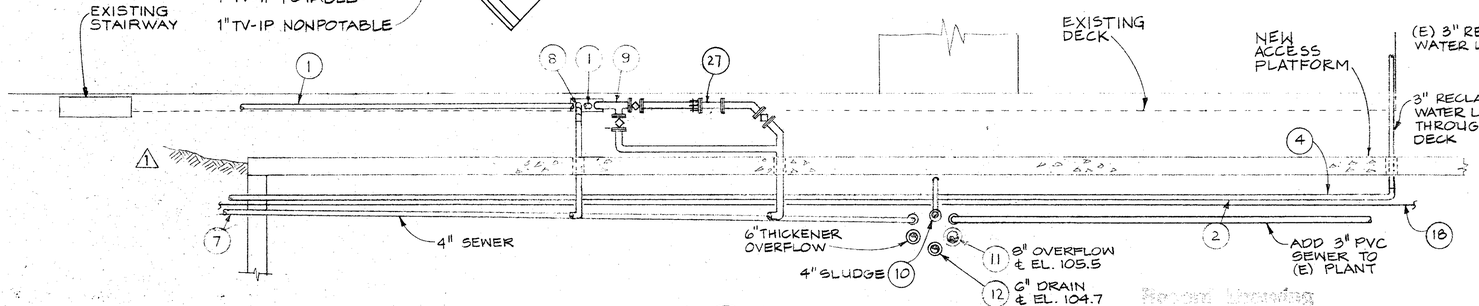

SECTION H
SCALE: 1/4"=1'-0" 21 24

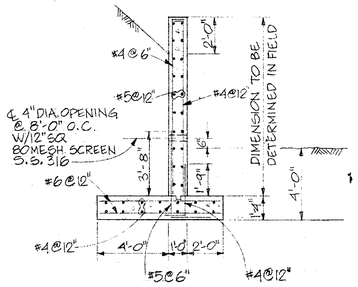

SCALE: 1/4"=1'-0" A 23 24

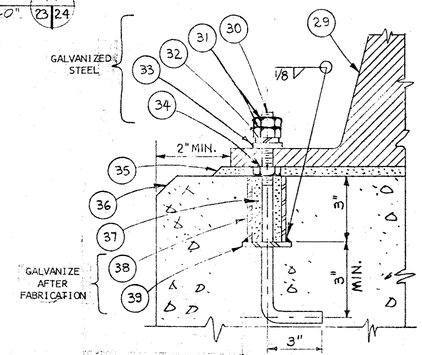

TYPICAL EQUIPMENT BASE ANCHOR BOLT DETAIL 1 24 24

NO SCALE

2,3,6,7,8,9,10,11,12,13,16 17,18,19,20,21,22,23,26,27,34

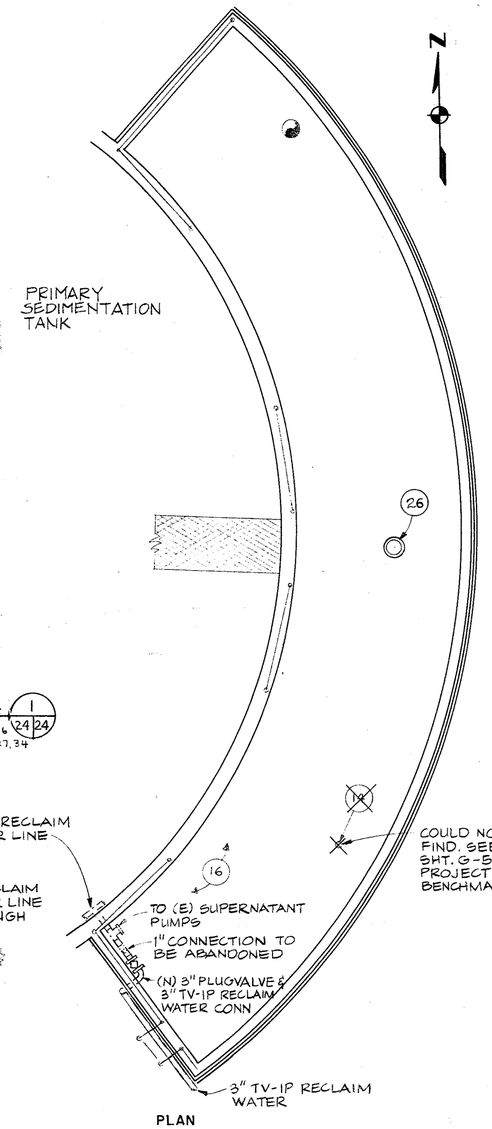

EXISTING CONTROL BUILDING ROOF

1 4" TV-1P DIGESTED SLUDGE
2 4" TV-1P RECLAIMED WATER
~~3 1 1/2" TX-2P HOT WATER SUPPLY~~
~~4 1 1/2" TX-2P HOT WATER RETURN~~
~~5 1 1/2" TV-1P SULFUR DIOXIDE GAS~~
~~6 1 1/2" TV-1P CHLORINE GAS~~
7 4" TV-1P SANITARY DRAIN
8 4" TV-1P PRIMARY SCUM
9 4" TV-1P PRIMARY SLUDGE
10 4" TV-1P SECONDARY SLUDGE
11 8" TV-1P SUPERNATANT
12 6" TV-1P SKIMMINGS
13 2" TV-1P POTABLE WATER
~~14 BENCHMARK 3. EL. 123.22 USGS 1929 MSL + 100. BY HOFFMAN & ALBRITTON, 1980~~
~~15 CUT EXISTING 4" PVC RECLAIMED WATER LINE OUTSIDE OF HANDRAIL. CONNECT IT WITH TV-1P TO EXISTING 3" PVC LINE ON THE INSIDE OF THE PRI. SED. TANK WALL AND TO THE 1" PVC LINE ON THE OUTSIDE OF THAT WALL.~~
16 DISCONNECT EXISTING RECLAIMED WATER PUMPS. ABANDON IN PLACE.
~~17 8" TV-1P FORT BAKER INFLUENT. HORIZONTAL RUN ELEVATION TO SUIT CONNECTION POINT. SLOPE TO CONNECTION AT TEE SPECIAL WITH 1/4"/FT. MINIMUM SLOPE.~~
18 2" TV-1P POTABLE WATER. CONNECT TO EXISTING LINE AT EXISTING CONTROL BUILDING.
19 NEW BACKFLOW PREVENTER. SEE M-28.
~~20 NEW 1" TV-1P NON-POTABLE WATER. CONNECT TO EXISTING 1" LINE UNDER THE FLOOR.~~
~~21 EXISTING WATER SUPPLY RISER. DISCONNECT AND CAP. REMOVE EXISTING PIPING BETWEEN THIS AND THE HILLSIDE STAIRS.~~
~~22 NEW 3/4" TV-1P POTABLE WATER UNDER FLOOR. CONNECT TO EXISTING SHOWER & EYEWASH.~~
~~23 DISCONNECT FROM EXISTING 1" PVC LINE AND CAP LINE. CONNECT TO NEW 3/4" TV-1P POTABLE WATER LINE.~~
24 NEW 3/4" TV-1P NON-POTABLE WATER. CONTINUATION SEE SHEETS M-21 THRU M-23
25 REMOVE ALL EXISTING CHLORINE AND SO2 PIPING AND APPURTENANCES. LEAVE EQUIPMENT DISCONNECTED BUT IN PLACE.
26 REPLACE THE EXISTING WASTE GAS BURNER. SEE SPECS.
27 NEW FLOW METER
~~28 REMOVE EXISTING FENCING BETWEEN THESE POINTS. INSTALL NEW FENCE POST AT WEST END OF OPENING. SEE SHEET M-21.~~
29 EQUIPMENT BASE
30 ANCHOR BOLT. SIZE AND LOCATION TO CONFORM TO THE EQUIPMENT MANUFACTURER'S REQUIREMENTS.
31 HEXAGONAL NUTS.
32 LOCK WASHER.
33 FLAT WASHER.
34 NUT FOR LEVELING.
35 3/4-INCH LEVELING GROUT.
36 CONCRETE EQUIPMENT BASE. HEIGHT AS SHOWN OR TO MATCH EQUIPMENT ELEVATION REQUIREMENTS. SEE STRUCTURAL DWGS FOR REINFORCEMENT. WHERE THE BASE IS LESS THAN 8-INCHES THICK, PROVIDE A RECESS IN THE FLOOR TO ACCOMODATE THE ANCHOR BOLT(S). CHAMFER THE EDGES .
37 FILL W/NON-METALLIC, NON-SHRINK GROUT AFTER THE EQUIPMENT HAS BEEN SET AND LEVELING HAS BEEN DONE.
38 SCHED. 40 STEEL PIPE, MIN. I.D. ONE INCH GREATER THAN THE ANCHOR BOLT DIAMETER.
39 3/16-INCH STEEL PLATE, 2-1/2" SQUARE.

GRAPHIC SCALE
1/4" = 1'-0" 0 5 10

Record Drawing
These record drawings have been prepared, in part, on the basis of information compiled and furnished by others. Consequently, Owner is not responsible for any errors or omissions in this document as a result of information provided by others.
Dated APR. 21, 19 88

Record Drawing
Dated

Revised	Description	Submit.	Appr'd.	Date
1	FIELD CHANGE			

Refer to Tracing for Latest Revision

Reference Information and Notes:

REFER TO THE NOTE WITH THIS NUMBER

Designed	JHF
Drawn	JHF
Checked	JHF
Date	1-29-81

Wastewater Plant Improvements C-06-2464
Sausalito - Marin City Sanitary District

Kennedy/Jenks Engineers San Francisco
Submitted: Walter Hamman 29370 Approved: Robert J. Ames

PRIMARY STRUCTURE MODIFICATIONS AND DELETIONS

Scale	1/4"=1'-0"
Job No.	0112
Sheet	M-24
of	

33

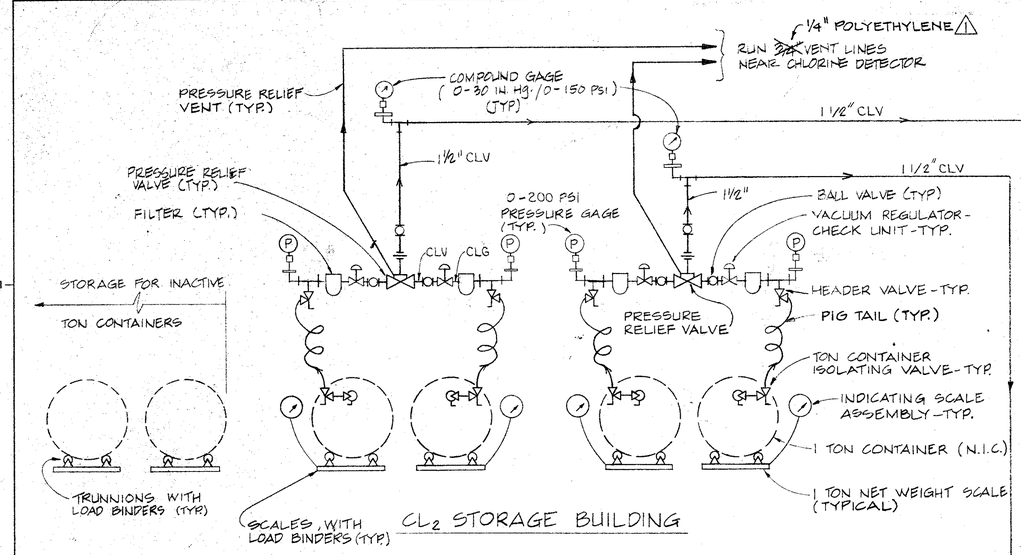

CL_2 STORAGE BUILDING

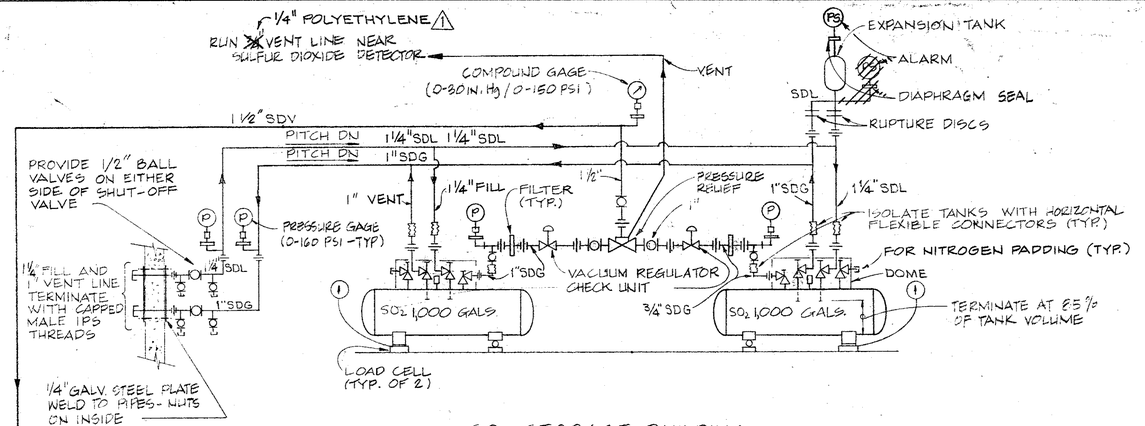

SO_2 STORAGE BUILDING

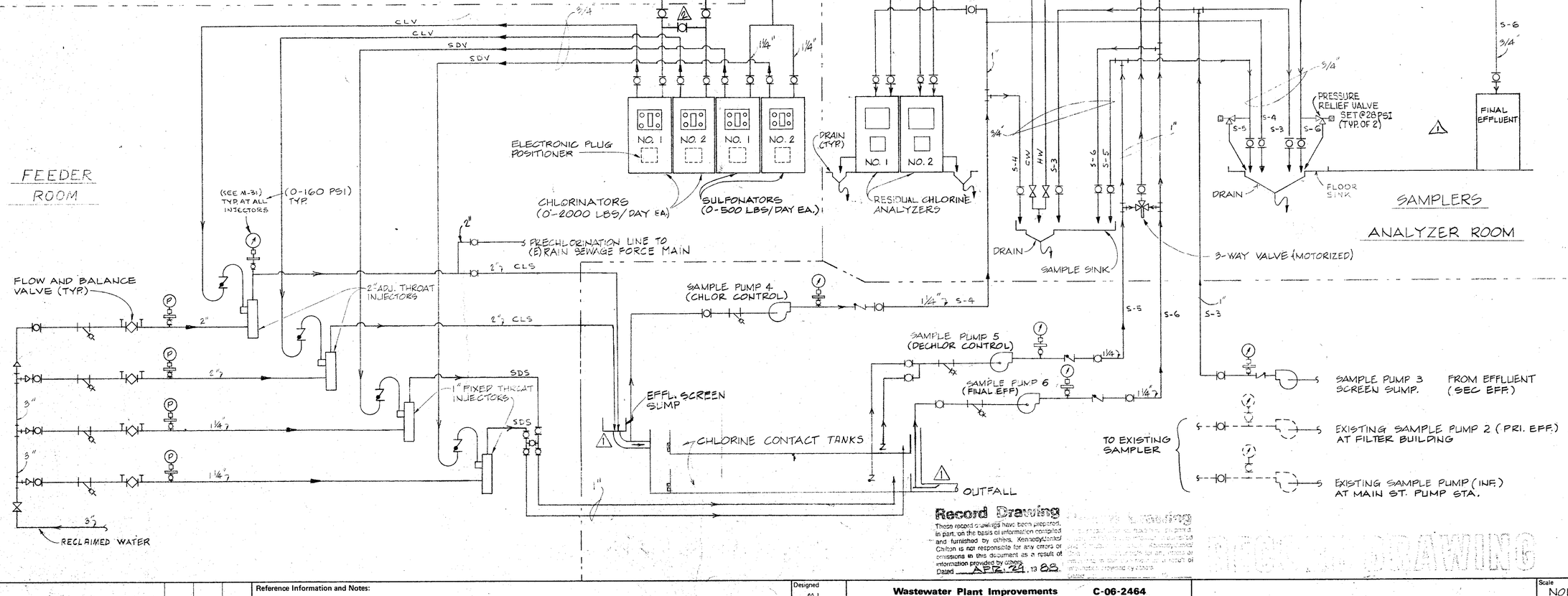

Record Drawing

These record drawings have been prepared, in part, on the basis of information compiled and furnished by others. Kennedy/Jenks/Chilton is not responsible for any errors or omissions in this document as a result of information provided by others.
Dated APR. 24, 19 88.

RECORD DRAWING

Revised	Description	Submit.	Appr'd.	Date
2	CHANGE ORDER NO. 36			
1	FIELD CHANGE			

Refer to Tracing for Latest Revision

Reference Information and Notes:

CLG — CHLORINE GAS
CLV — CHLORINE VACUUM
CLS — CHLORINE SOLUTION
SDG — SULFUR DIOXIDE GAS
SDV — SULFUR DIOXIDE VACUUM
SDS — SULFUR DIOXIDE SOLUTION
SDL — SULFUR DIOXIDE LIQUID

Designed ML
Drawn DSP
Checked JHF
Date 1-29-81

Wastewater Plant Improvements C-06-2464
Sausalito - Marin City Sanitary District

Kennedy/Jenks Engineers — San Francisco
Submitted: Walter E. Grunow C 9370
Approved: Robert J. Ames

CHLORINATION / DECHLORINATION SCHEMATIC DIAGRAM

Scale NONE
Job No. 0112
Sheet M-25 of

34

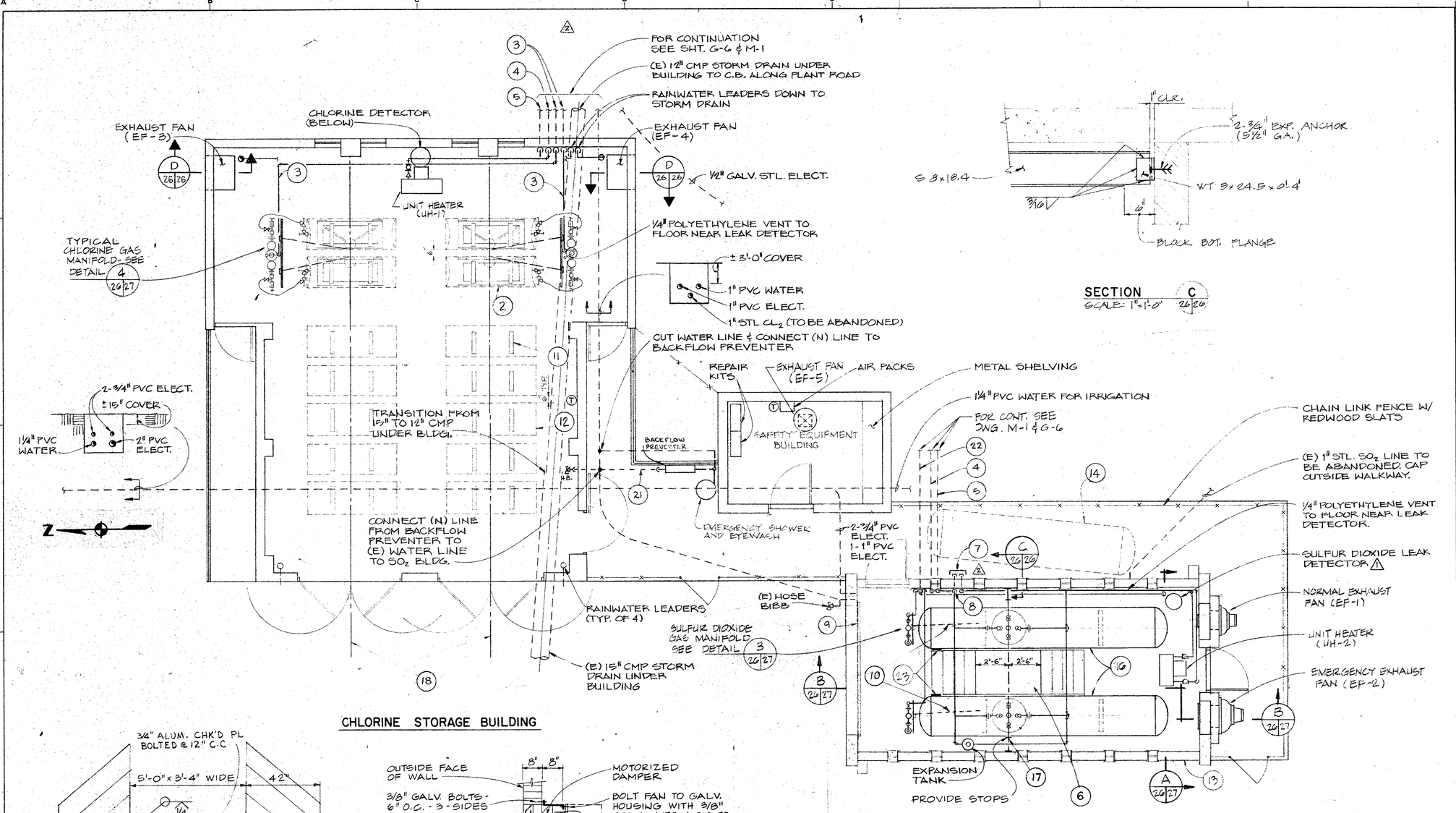

SECTION C
SCALE: 1"=1'-0" 26/26

1. 2 CHLORINE SCALE W/LOAD BINDERS, TYP OF 4.
3. 1½" TV-1P CHLORINE GAS
4. 3/4" TX-2P HOT WATER SUPPLY
5. 3/4" TX-2P HOT WATER RETURN
6. PLATFORM 3'-0" ABOVE FLOOR
7. FILL AND VAPOR LINES FOR TRUCK CONNECTIONS.
8. FOR VALVING SEE FLOW DIAGRAM ON M-25
9. EXISTING 10' X 10' ROLL UP DOOR
10. LOAD CELL HYDRAULIC LINES IN CONDUIT FASTENED TO THE FLOOR SLAB.
11. TRUNNIONS W/LOAD BINDERS (TYPICAL)
12. CHLORINE CYLINDERS BY OTHERS.
13. EXISTING CHLORINE STORAGE BUILDING. CONVERT TO SULFUR DIOXIDE STORAGE. REMOVE ALL CHLORINE AND EXISTING SULFUR DIOXIDE PIPING, VALVES, SUPPORTS, ETC. REMOVE THE TIE DOWN. PATCH THE FLOOR TO A SMOOTH SURFACE.
14. EXISTING SULFUR DIOXIDE STORAGE TANK TO BE REMOVED.
15. [illegible]
16. 3'-0" X 17'-0" CYLINDRICAL SULFUR DIOXIDE STORAGE TANKS (CAP: 1,000 GALS NOMINAL).
17. CRANE RAIL, TROLLEY AND HOIST.
18. ONE 2-TON HOIST AND TROLLEY FOR EACH RAIL.
19. EXISTING 1" PVC POTABLE WATER LINE.
20. 1" TV-1P POTABLE WATER
21. 1" TV-1P NON-POTABLE WATER.
22. 1½" TV-1P SULFUR DIOXIDE GAS.
23. PLACARD HOLDER (SEE SPECS)

CHLORINE STORAGE BUILDING

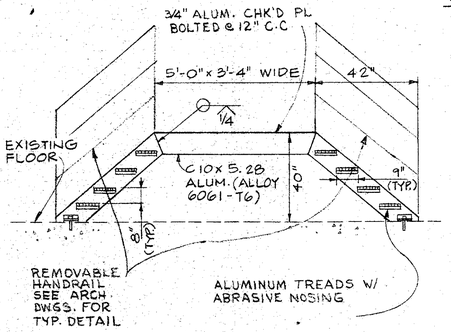

PLATFORM DETAIL
NO SCALE

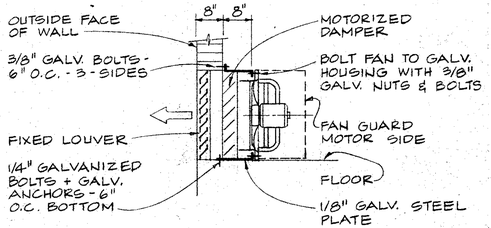

SECTION D
NO SCALE 26/26

SO2 STORAGE BUILDING

Record Drawing
These record drawings have been prepared, in part, on the basis of information compiled and furnished by others. Kennedy/Jenks/Chilton is not responsible for any errors or omissions in the document as a result of information provided by others.
Date: APR. 24 19 88

RECORD DRAWING

GRAPHIC SCALE
1" = 1'-0" 0 1 2 3
1/4" = 1'-0" 0 5 10

Revised	Description	Submit.	Appr'd.	Date
2	FIELD CHANGE			
1	C.O. NO: 7			

Refer to Tracing for Latest Revision

Reference Information and Notes:

FOR TYPICAL EQUIPMENT ANCHORAGE SEE SHEET M-24

REFER TO THE NOTE WITH THIS NUMBER

Designed ML
Drawn JHF
Checked JHF
Date 1-29-81

Wastewater Plant Improvements C-06-2464
Sausalito - Marin City Sanitary District

Kennedy/Jenks Engineers San Francisco
Submitted: Walter F. Kamma C9370 Approved: Robert J. Avery

CHLORINE AND SULFUR DIOXIDE STORAGE AREA PLAN

Scale 1/4"=1'-0"
Job No. 0112
Sheet M-26
of

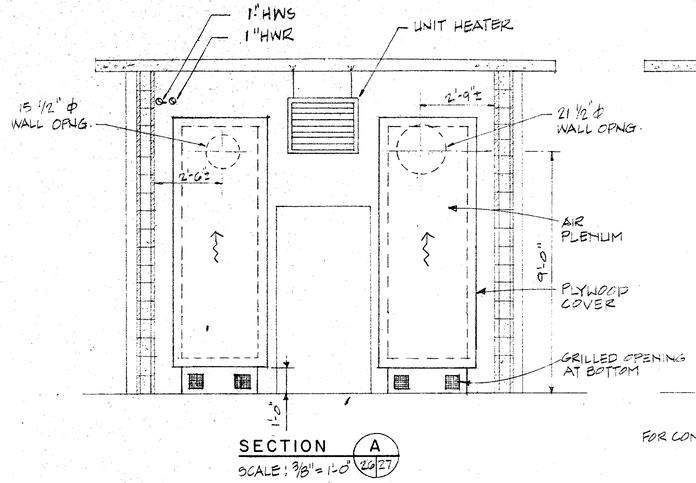

SECTION A (26/27)
SCALE: 3/8" = 1'-0"

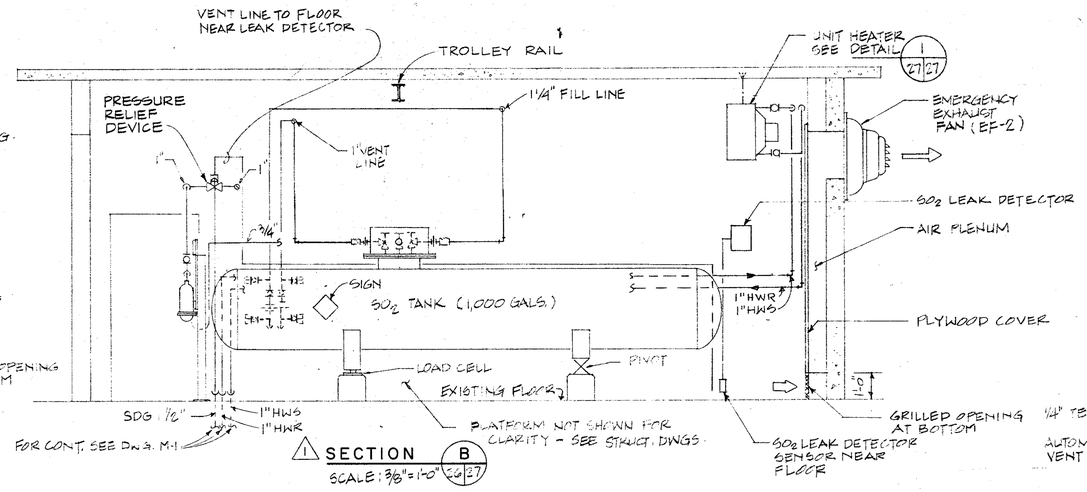

1 SECTION B (26/27)
SCALE: 3/8" = 1'-0"

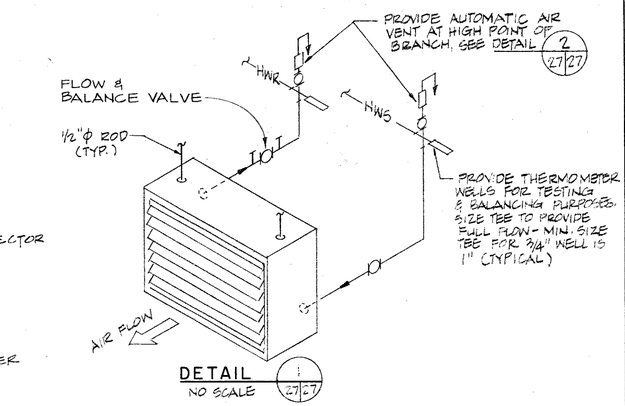

DETAIL 1 (27/27)
NO SCALE

UNIT HEATER

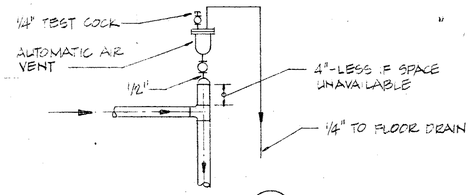

DETAIL 2 (27/27)
NO SCALE

TYPICAL AUTOMATIC AIR VENT (ELIMINATOR)

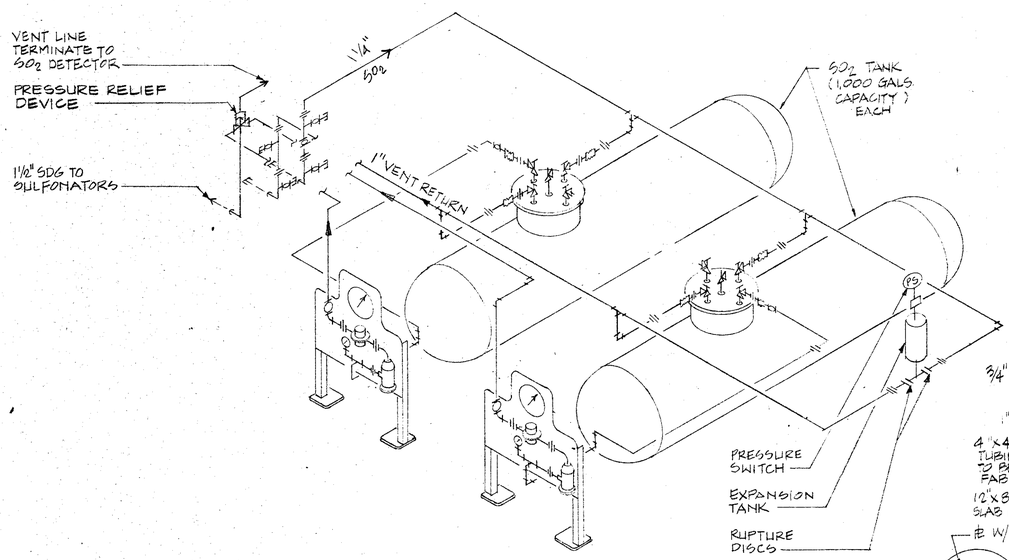

SULFUR DIOXIDE PIPING ISOMETRIC (1)
NO SCALE

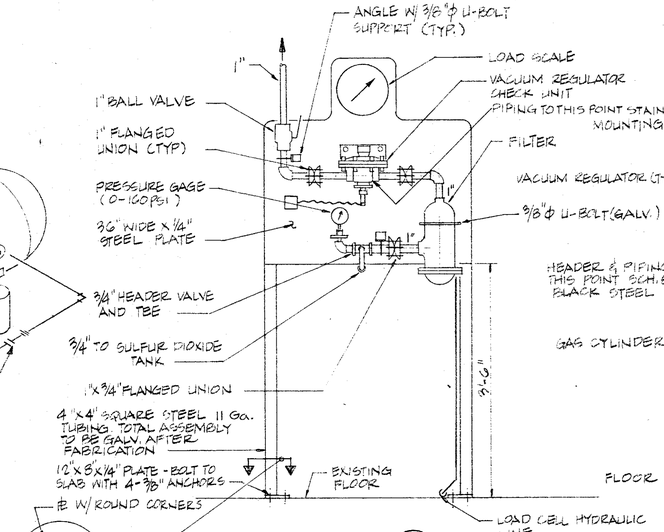

DETAIL 3 (26/27)
NO SCALE

TYPICAL SULFUR DIOXIDE GAS MANIFOLD

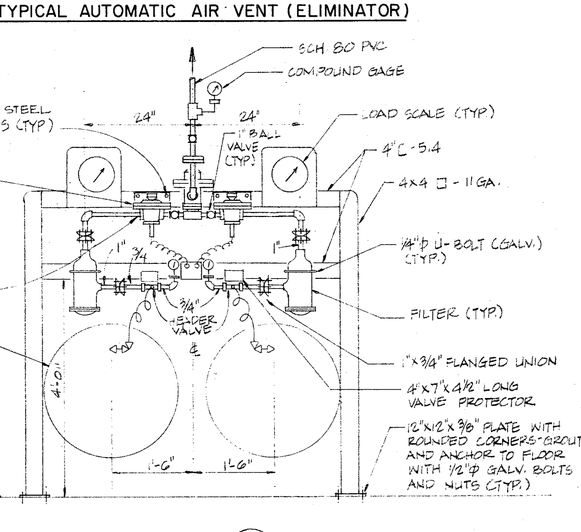

DETAIL 4 (26/27)
NO SCALE

TYPICAL CHLORINE GAS MANIFOLD

GRAPHIC SCALE
3/8" = 1'-0"
0 5 10

Record Drawing
These record drawings have been prepared on paper on the basis of information compiled and furnished by others. Kennedy/Jenks/Chilton is not responsible for any errors or omissions in this document as a result of information provided by others.
Dated APR. 29, 19 82

Revised	Description	Submit.	Appr'd.	Date
1	FIELD CHANGE			

Refer to Tracing for Latest Revision

Reference Information and Notes:

FOR TYPICAL EQUIPMENT ANCHORAGE SEE SHEET M-24

REFER TO THE NOTE WITH THIS NUMBER

Designed	ML/MSA
Drawn	ALI
Checked	JHF
Date	1-29-81

Wastewater Plant Improvements C-06-2464
Sausalito - Marin City Sanitary District

Kennedy/Jenks Engineers — San Francisco

Submitted: Walter J. Hansman C9370 — Approved:

CHLORINE AND SULFUR DIOXIDE STORAGE SECTIONS AND DETAILS

Scale 3/8" = 1'-0"
Job No. 0112
Sheet M-27 of

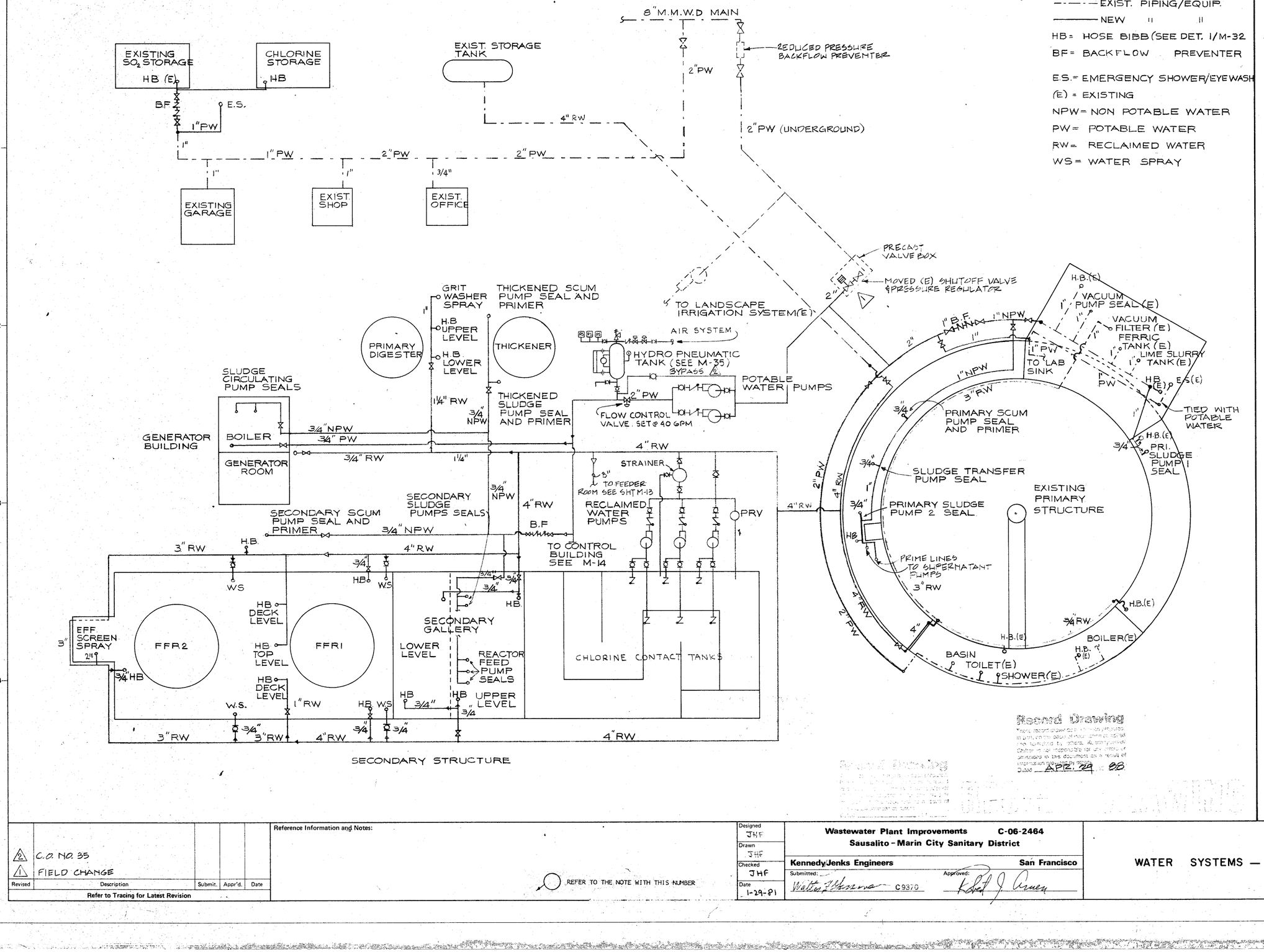

— · — · — EXIST. PIPING/EQUIP.
——— NEW " "

HB = HOSE BIBB (SEE DET. 1/M-32
BF = BACKFLOW PREVENTER
E.S. = EMERGENCY SHOWER/EYEWASH
(E) = EXISTING
NPW = NON POTABLE WATER
PW = POTABLE WATER
RW = RECLAIMED WATER
WS = WATER SPRAY

Record Drawing

This record drawing was prepared from data furnished by others. Kennedy/Jenks Engineers makes no warranty as to the accuracy or completeness of the information shown and assumes no responsibility for any errors or omissions in this document as a result of information furnished by others.

Dated APR. 29 88

Revised	Description	Submit.	Appr'd.	Date
2	C.O. NO. 35			
1	FIELD CHANGE			

Refer to Tracing for Latest Revision

Reference Information and Notes:

REFER TO THE NOTE WITH THIS NUMBER

Designed JHF
Drawn JHF
Checked JHF
Date 1-29-81

Wastewater Plant Improvements C-06-2464
Sausalito - Marin City Sanitary District

Kennedy/Jenks Engineers — San Francisco
Submitted: Walter F. Kennedy C9370 Approved: Robert J. Cruess

WATER SYSTEMS — SCHEMATIC

Scale NONE
Job No. 0112
Sheet M-28 of

37

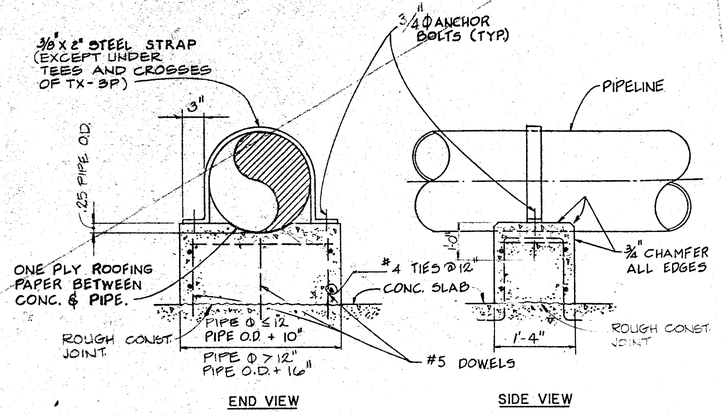

TYPE 1 PIPE SUPPORT (T1S)

SCALE: NONE

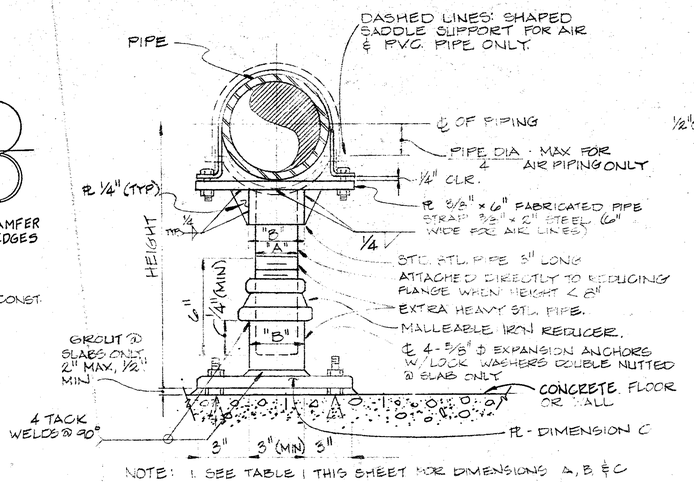

NOTE: 1. SEE TABLE 1 THIS SHEET FOR DIMENSIONS A, B & C

TYPE 3 PIPE SUPPORT (T3S)

NO SCALE

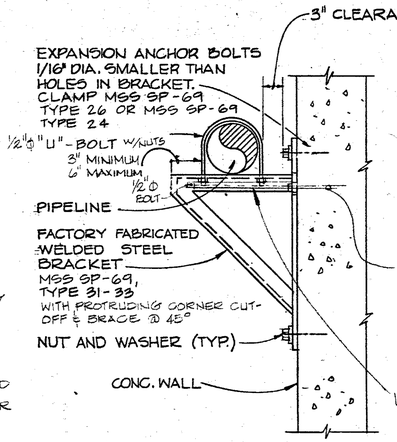

TYPE 4 PIPE SUPPORT 4 (T S)

NO SCALE

TABLE 1				
SUPPORT T3S, T2S			PIPE	
A	B	PL C	SIZE	HEIGHT
2"	3"	3/8" SQ PL.	≤ 6" Ø	≤ 2'-0"
3"	4"	½" SQ PL.	> 6" Ø	> 2'-0"

* ANY COMBINATION, HEIGHT DETERMINES SIZE OF SUPPORT

NOTE: FOR DIMENSIONS "A" "B" & "C" SEE TABLE 1

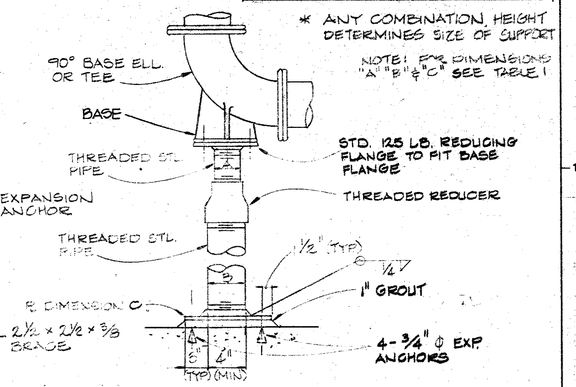

TYPE 2 PIPE SUPPORT (T2S)

NO SCALE

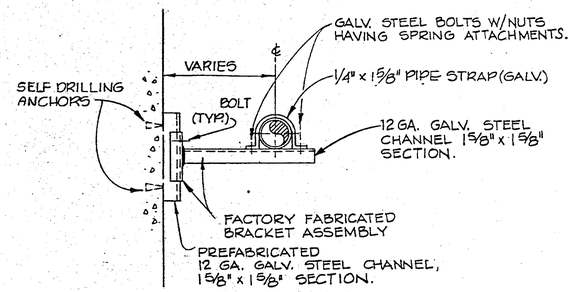

TYPE 8 PIPE SUPPORT (T8S)

NO SCALE

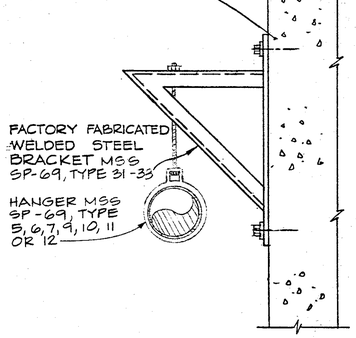

TYPE 5 PIPE SUPPORT (T5S)

NO SCALE

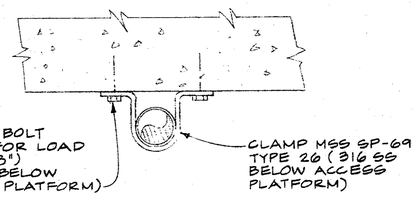

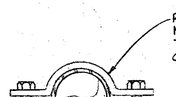

TYPE 10 PIPE SUPPORT (T10S)

NO SCALE

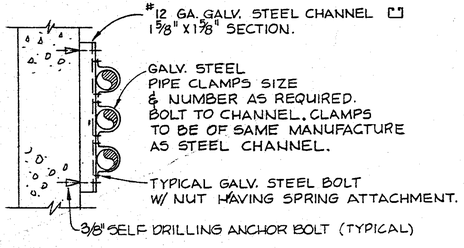

TYPE 7 PIPE SUPPORT (T7S)

SCALE: NONE

TYPE 6 PIPE SUPPORT (T6S)

NO SCALE

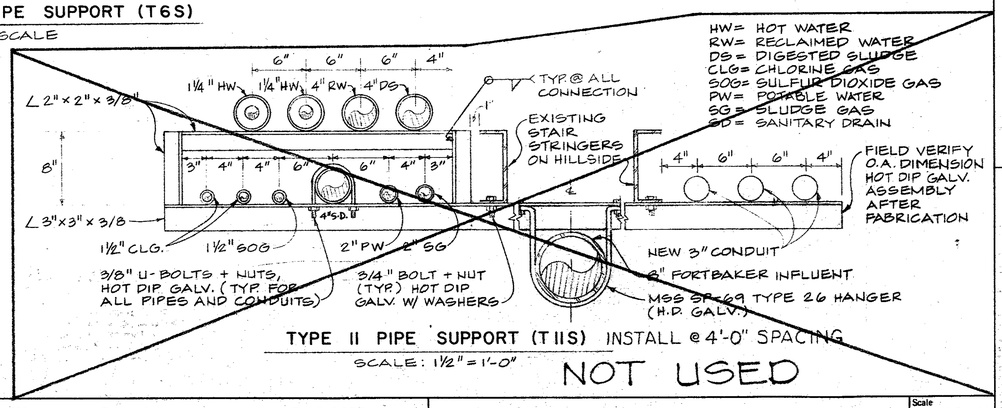

TYPE 11 PIPE SUPPORT (T11S) INSTALL @ 4'-0" SPACING

SCALE: 1½" = 1'-0"

NOT USED

Record Drawing
APR. 29 '88
Record Drawing
RECORD DRAWING

1½" = 1'-0" 0 1 2 GRAPHIC SCALE

Revised	Description	Submit.	Appr'd.	Date
Refer to Tracing for Latest Revision				

Reference Information and Notes:

1. FOR TYPE 9 PIPE SUPPORT SEE (2/24/D7)

Designed JHF/JAF
Drawn AM
Checked JHF
Date 1-29-81

Wastewater Plant Improvements C-06-2464
Sausalito-Marin City Sanitary District

Kennedy/Jenks Engineers — San Francisco

Submitted: Walter J. Hamman 09370 Approved: Robert J. Cruden

PIPE SUPPORTS AND MISCELLANEOUS DETAILS

Scale AS SHOWN
Job No. 0112
Sheet M-29 of

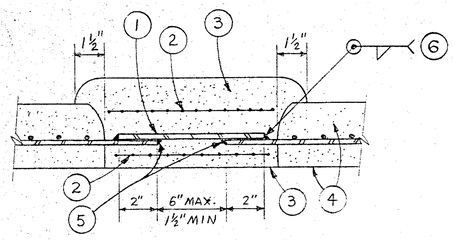

BUTT JOINT
NO SCALE

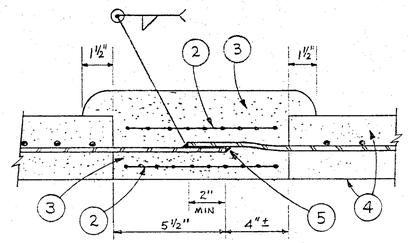

SWAGED JOINT
NO SCALE

TYPE M-2 PIPE JOINTS DETAILS

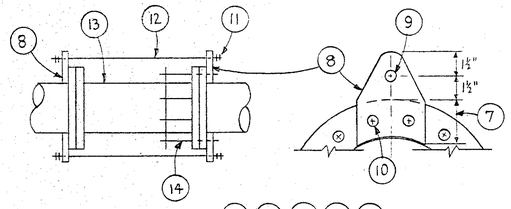

TIE ROD FOR FLEXIBLE JOINTS IN FLANGED PIPE
TYPICAL DETAIL NO SCALE

DIMENSIONS IN INCHES			
TIE ROD DIA.	T	E	A
≤ 1"	½	3½	6
> 1"	¾	4	9

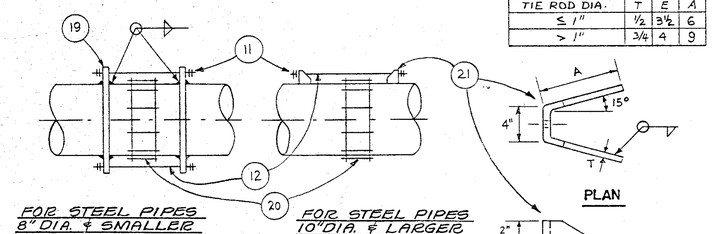

FOR STEEL PIPES 8" DIA. & SMALLER

FOR STEEL PIPES 10" DIA. & LARGER

TIE ROD FOR FLEXIBLE JOINTS
IN PLAIN END FERROUS PIPE
TYPICAL DETAIL (22) (18)
NO SCALE

TIE ROD TABLE

NOMINAL PIPE SIZE / TEST PRESSURE →	NUMBER/SIZE				
	12 PSI	25 PSI	50 PSI	100 PSI	150 PSI
4"	2-5/8"	2-5/8"	2-5/8"	2-5/8"	2-5/8"
6"	2-5/8"	2-5/8"	2-5/8"	2-5/8"	2-5/8"
8"	2-5/8"	2-5/8"	2-5/8"	2-3/4"	2-3/4"
10"	2-5/8"	2-5/8"	2-5/8"	2-3/4"	3-3/4"
12"	2-5/8"	2-5/8"	2-5/8"	3-3/8"	3-7/8"
14"	2-5/8"	2-5/8"	2-3/4"	3-7/8"	3-1"
16"	2-5/8"	2-5/8"	3-3/4"	3-7/8"	3-1⅛"
18"	2-5/8"	2-5/8"	3-3/4"	3-1"	3-1¼"
20"	2-5/8"	2-3/4"	3-7/8"	3-1⅛"	4-1¼"
24"	2-5/8"	3-3/4"	3-1"	4-1¼"	3-1¼"

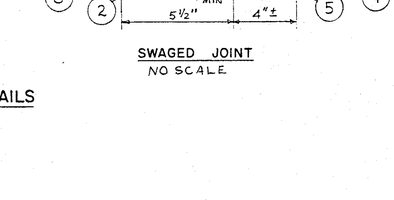

TYPICAL TRENCH DETAIL (1) (1/30)

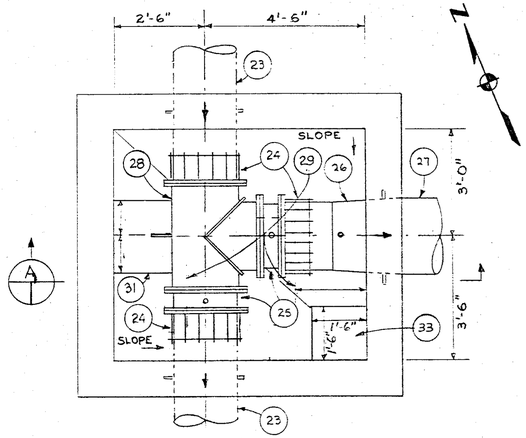

INFLUENT VALVE BOX PIPING
SCALE: 1/2" = 1'-0"

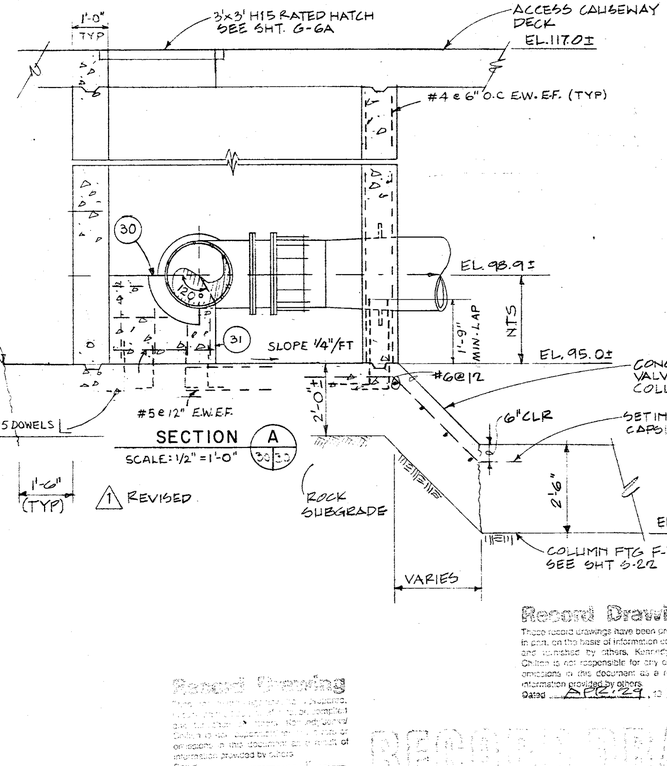

SECTION (A) (3/3)
SCALE: 1/2" = 1'-0"

1 REVISED

1. BUTT STRAP. THICKNESS SAME AS PIPE CYLINDER.
2. WIRE MESH.
3. FIELD APPLIED CEMENT MORTAR.
4. PIPE CEMENT MORTAR LINING AND COATING.
5. OPTIONAL WELD TO WELD SHOWN
6. ONE SIDE MAY BE SHOP WELDED.
7. DIMENSION VARIES WITH PIPE SIZE.
8. 5/8" STEEL PLATE.
9. SEE TIE ROD TABLE FOR ROD SIZE.
10. DRILL HOLES TO MATCH FLANGE.
11. DOUBLE NUT (TYPICAL).
12. TIE ROD. SEE TIE ROD TABLE.
13. SPOOL FXPE.
14. FLANGED COUPLING ADAPTER.
15. TIE RODS AND RUBBER COUPLINGS ARE SIMILAR.
16. SPACE RODS EQUALLY AROUND PERIMETER.
17. FCA'S SMALLER THAN 12" MAY HAVE ANCHOR STUDS IN LIEU OF TIE RODS.
18. FCA'S 14" AND LARGER AND ALL FLEX COUPLINGS TO HAVE TIE RODS WHERE SHOWN OR WHERE REQUIRED FOR PIPE RESTRAINT.
19. FLANGE FOR PIPE ONE SIZE LARGER.
20. FLEXIBLE COUPLING.
21. STEEL LUG.
22. FOR DUCTILE IRON PIPE. USE FRICTION CLAMPS AND SPOT WELDS IN LIEU OF FLANGE OR LUGS WELDED TO PIPE, OR USE DETAIL SHOWN FOR FLANGED PIPE.
23. EXISTING 20" LINE. CUT, LEAVING 1" MIN. GAP AT THE FLANGED COUPLING ADAPTERS. WELD CUT-OFF FLANGES AT WALLS, 1" THICK, MIN. DIAMETER 26". COAT CUT ENDS WITH SOMASTIC COATING.
24. 20" FLANGED COUPLING ADAPTERS, FUSION EPOXY LINED AND COATED, 316 SS HARDWARE.
25. 20" KNIFE GATE VALVE (SEE SPECS.).
26. 20" X 24" TM-2P INCREASER W/CUTOFF FLANGE. PROVIDE TESTING TAP ON PIPE CROWN. CAP AND COAT WITH MORTAR AFTER SUCCESSFUL HYDROSTATIC TEST.
27. NEW 24" TM-2P BYPASS LINE.
28. 20" TM-2P TEE. SUPPORT WITH TYPE 1 SUPPORT.
29. BILCO J-4AL HATCH, EQUIVILANT BY BABCOCK, OR EQUAL. LOCATED IN PLATFORM ABOVE. 3'-0" X 3'-0" OPENING FOR VALVE INSTALLATION AND REMOVAL.
30. 3/8" X 6" QUARTER RING FOR THRUST. WELD ALL AROUND.
31. THRUST BLOCK
32. ~~FIBERGLASS GRATING. SEE SPECS.~~
33. 6 INCH DEEP SUMP
34. PAVING (IN ROADWAY ONLY) SEE SPECS. MATCH THE THICKNESS OF THE EXISTING PAVEMENT. SAW CUT THE EXISTING PAVEMENT BEFORE TRENCHING.
35. CALTRANS SPEC AGGREGATE BASE, CLASS 2, 3/4" MAXIMUM. COMPACT TO 95% RELATIVE DENSITY.
36. CALTRANS SPEC AGGREGATE SUBBASE, CLASS 1. OR STRUCTURAL FILL.
37. SAND COVER FOR PIPE. HAND TAMP IN PLACE TO AVOID DAMAGING PIPE.
38. SAND BEDDING FOR PIPE. SPREAD EVENLY AND SMOOTH OUT BEFORE LAYING PIPE IN THE TRENCH. MAKE FITTING OR BELL HOLES AS NECESSARY TO ENSURE EVEN BEARING OF THE PIPE ON THE SAND.
39. WHERE PIPE IS NOT IN A ROADWAY, THE PAVING AND AGGREGATE BASE MATERIAL, ITEMS 34 AND 35 ARE OMITTED, AND ARE TO BE REPLACED BY ITEM 35 COMPACTED TO A MINIMUM DENSITY OF 90%.

Record Drawing
These record drawings have been prepared, in part, on the basis of information compiled and furnished by others. Kennedy/Jenks/Chilton is not responsible for any errors or omissions in this document as a result of information provided by others.
Dated APR. 27, 1988

Record Drawing
These record drawings have been prepared, in part, on the basis of information compiled and furnished by others. Kennedy/Jenks/Chilton is not responsible for any errors or omissions in this document as a result of information provided by others.
Dated _____

RECORD DRAWING

GRAPHIC SCALE
1/2" = 1'-0"
0 1 2 3 4 5

Revised	Description	Submit.	Appr'd.	Date
1	C.O. NO. 3			

Refer to Tracing for Latest Revision

Reference Information and Notes:

REFER TO THE NOTE WITH THIS NUMBER

Designed	JHF
Drawn	JHF
Checked	JHF
Date	1-29-81

Wastewater Plant Improvements C-06-2464
Sausalito - Marin City Sanitary District

Kennedy/Jenks Engineers San Francisco

Submitted: Walter J. Kennedy 09370 Approved: Robert J. Ames

PIPING
AND
MISCELLANEOUS DETAILS

Scale: AS SHOWN
Job No.: 0112
Sheet: M-30 of

39

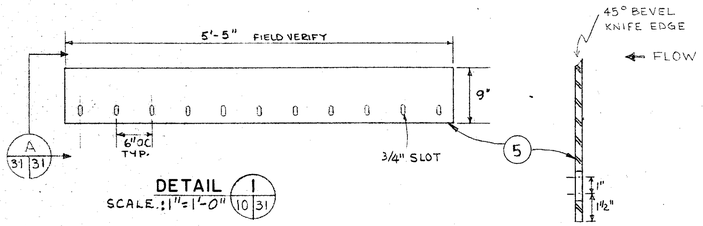

DETAIL 1
SCALE: 1"=1'-0" 10 31

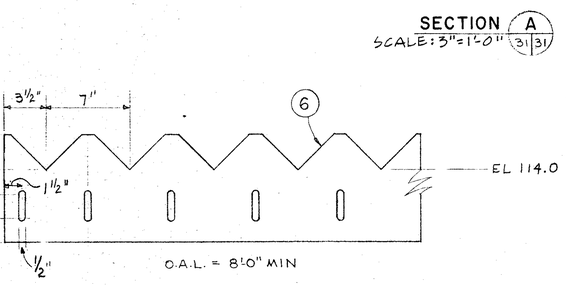

DETAIL 6
SCALE: 2"=1'-0" 8 31

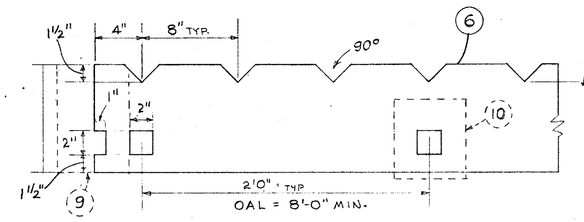

DETAIL 2
SCALE: 2"=1'-0" 16 31

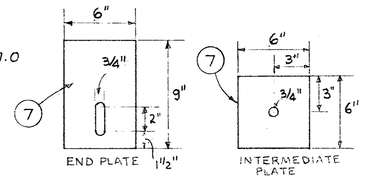

DETAIL 3
SCALE: 2"=1'-0" 31 31

DETAIL 4
SCALE: 2"=1'-0" 31 31

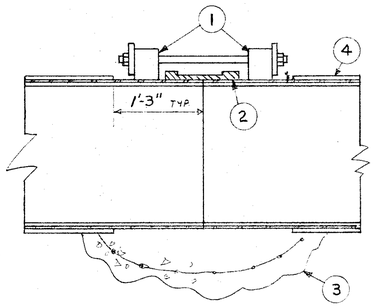

DETAIL 7
SCALE: 1"=1'-0" 6 31

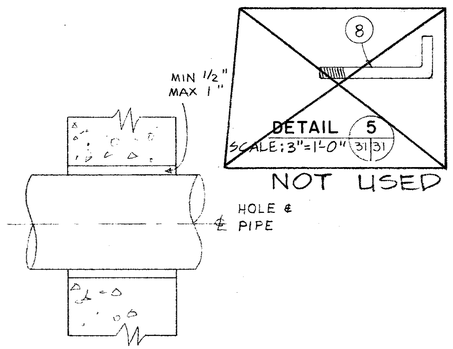

DETAIL 5
SCALE: 3"=1'-0" 31 31

NOT USED

DETAIL 8
NO SCALE 3 31
8

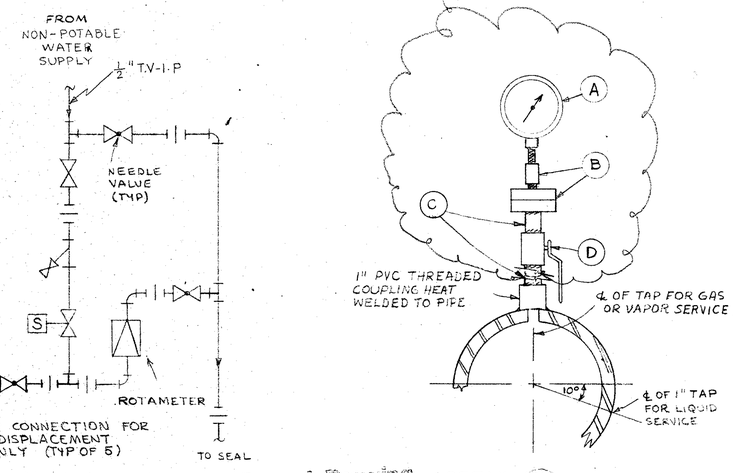

DETAIL 9
NO SCALE 3 31
8,19,21,22,23,28

DETAIL 10
NO SCALE 3 31
6,7,8,12,18,19,21,22

Record Drawing
Taken from data furnished by others. Inspection by this office of the data of information and verification by others. Recommendation and condition to not responsible for any errors or omissions in this document as a result of information provided by others.
Dated APR 29 1988

PRESSURE GAGE/SWITCH ASSEMBLY SELECTION

ITEM	CHOICE	DESCRIPTION	MANUFACTURER/MODEL NUMBER
A*	1	INDICATING PRESSURE SWITCH	ROBERTSHAW SP212A AMETEK 3050, OR EQUAL
	2	PRESSURE GAUGE 4½ INCH	ROBERTSHAW 371 AMETEK 1980, OR EQUAL
	3	PRESSURE GAUGE	ROBERTSHAW 771 AMETEK 1981, OR EQUAL
B	4	DIAPHRAGM SEAL W/SNUBBER	CHEMEQUIP 200; ROBERTSHAW D-26W CHEMEQUIP 1409, OR EQUAL
	5	PVC SCHED.80 REDUCING BUSHINGS	-------
C	6	AISI TYPE 316 SS 1-INCH NPT SCH.40	LENGTH TO SUIT VALVE D
	7	PVC SCHED.80 1-INCH NPT	
D	8	BALL VALVE AISI TYPE 316 SS 1-INCH THREADED	JAMESBURY 2000 WALWORTH 3030-B, OR EQUAL
	9	BALL VALVE PVC 1-INCH THREADED	CHEMTROL +GF+, OR EQUAL

* ALL GAUGES SHALL HAVE THE UNITS OF MEASUREMENT (I.E. PSI, IN-H_2O, ETC.) ON THE GAUGE FACE.

PRESSURE GAGE/SWITCH ASSEMBLY CHART

PUMP NAME	INLET(I) DISCH(D)	ITEMS A	B	C	D	GAUGE/SWITCH RANGE
REACTOR SUPPLY PUMPS 1-3	I	2	4	6	8	30-0-15
	D	2	4	6	8	0-60
PRIMARY SLUDGE PUMPS 1-2	I	3	4	6	8	30-0-15
	D	3	4	6	8	0-30
SECONDARY SLUDGE PUMPS 1-2	I	2	4	7	9	30-0-15
	D	2	4	7	9	0-30
PRIMARY/SECONDARY SCUM PUMPS 1	I	NONE				30-0-15
	D	3	4	6	8	0-100
THICKENED SLUDGE/SCUM PUMPS 1	I	NONE				30-0-15
	D	1	4	6	8	0-100
SLUDGE CIRCULATING PUMPS 1-2	I	2	4	7	9	30-0-15
	D	2	4	7	9	0-30
SUPERNATANT PUMPS 1-2	I	3	4	7	9	30-0-15
	D	3	4	7	9	0-30
RECLAIMED WATER PUMPS 1-3	I	3	4	7	9	30-0-15
	D	3	4	7	9	0-100
POTABLE WATER PUMPS	I	3	5	7	9	0-30
	D	3	5	7	9	0-160

GRAPHIC SCALE
1" = 1'-0" 0 1 2 3
2" = 1'-0" 0 6" 12" 15"
3" = 1'-0" 0" 3" 6" 9" 12"

1 U-TYPE HARNESS AWWA M-11 TABLES 19.10 AND 19.11, FIGURE 19.18 FOR 50 PSI 7-INCH MIDDLE RING
2 ½" WALL THICKNESS FLEX COUPLING. BAKER SERIES 200; ROCKWELL 411, OR EQUAL
3 CONCRETE COATING ALL AROUND, MINIMUM THREE INCHES. LAP AT ENDS AND COVERAGE OVERALL STEEL SURFACES. WRAP FIRST WITH WIRE MESH EQUAL TO MESH FOR MORTAR COATING OF PIPE
4 24" T.M-2P. HOLD BACK MORTAR COATING 15 INCHES. COAT EXPOSED SURFACES WITH 15 MILS COAL TAR EPOXY
5 316 SS PLATE, 3/16" THICK. INSTALL WITH BEVEL DOWNSTREAM.
6 PVC PLATE, 3/16" THICK.
7 316 SS PLATE, 3/16" THICK.
~~8 3/8 X 6 X 2" A.B. 316 SS FOR DETAILS 3 AND 4.~~
9 SEE DETAIL 3/M-31.
10 SEE DETAIL 4/M-31.

Revised	Description	Submit.	Appr'd.	Date
1	C.O. NO. 46			

Refer to Tracing for Latest Revision

Reference Information and Notes:

Record Drawing
Taken from data furnished by others. Inspection by this office of the data of information and verification by others. Recommendation and condition to not responsible for any errors or omissions in this document as a result of information provided by others.
Dated APR 29 1988

REFER TO THE NOTE WITH THIS NUMBER

Designed JHF
Drawn JHF
Checked JHF
Date 1-29-81

Wastewater Plant Improvements C-06-2464
Sausalito - Marin City Sanitary District

Kennedy/Jenks Engineers — San Francisco
Submitted: — Approved:

PIPING AND MISCELLANEOUS DETAILS

Scale AS SHOWN
Job No. 0112
Sheet M-31 of

40

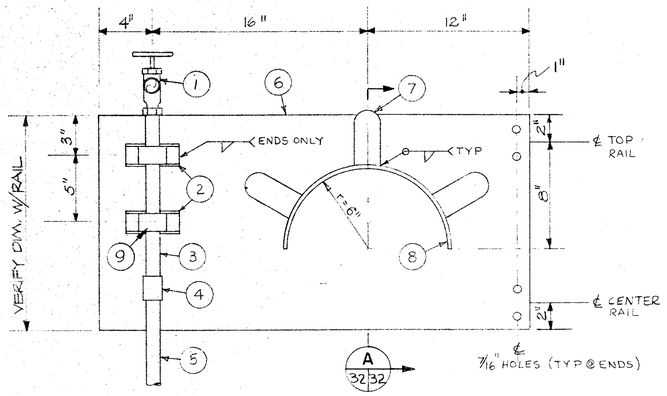

HOSE RACK DETAIL 1
NO SCALE 32 32
VARIOUS

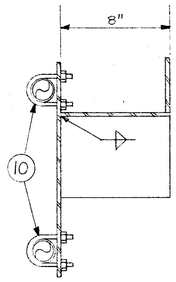

SECTION A
NO SCALE 32 32

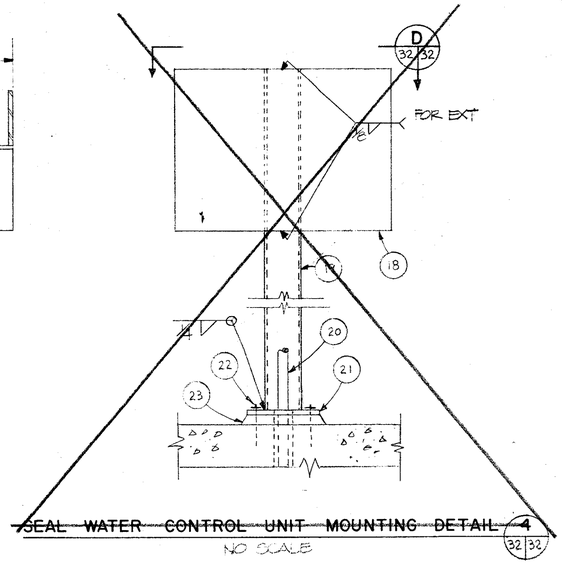

~~SEAL WATER CONTROL UNIT MOUNTING DETAIL 4~~
NO SCALE 32 32

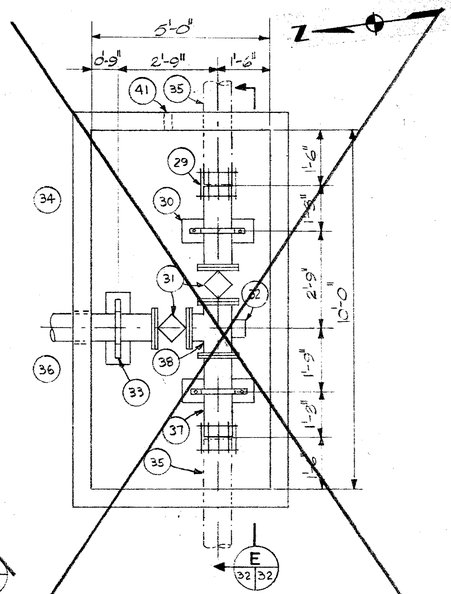

~~FORT BAKER INFLUENT VALVE BOX DETAIL 6~~
SCALE: 1/2"=1'-0" G 6 32

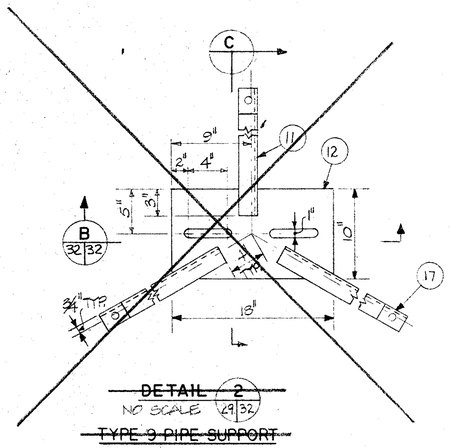

~~DETAIL 2~~
NO SCALE 19 32
~~TYPE 9 PIPE SUPPORT~~

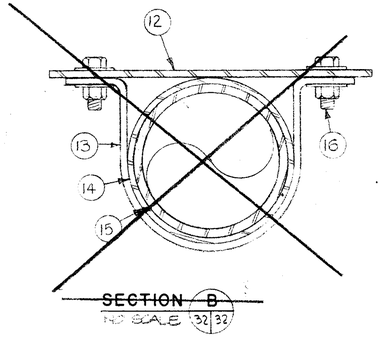

~~SECTION B~~
NO SCALE 32 32

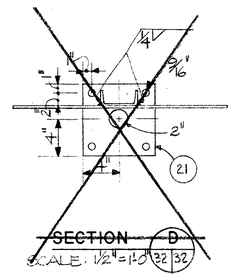

~~SECTION D~~
SCALE: 1/2"=1'-0" 32 32

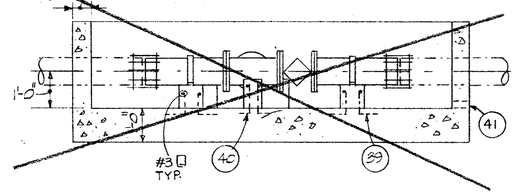

~~SECTION E~~
SCALE: 1/2"=1'-0" 32 32

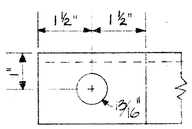

DETAIL 3
NO SCALE 32 32

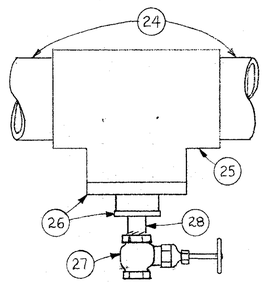

FLUSHING CONNECTION DETAIL 5
NO SCALE 18 32

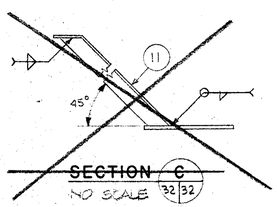

~~SECTION C~~
NO SCALE 32 32

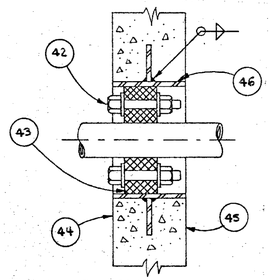

WALL PENETRATION DETAIL 7
NO SCALE 9 32
11,16,21

1 3/4" BRONZE ANGLE HOSE VALVE (GARDEN HOSE)
2 1-5/8" X 4" CHANNEL STRUT, 6063-T6 ALUMINUM.
3 3/4" BRASS PIPE, THREADED, 12" MIN. LENGTH.
4 3/4" ADAPTER COUPLER PVC.
5 3/4" TV-1P.
6 1/4" 6061-T6 PLATE.
7 1/4" X 2" X 4" 6061-T6 PLATE.
8 1/4" X 8" 6061-T6 PLATE
9 6063-T52 PIPE CLAMP, DOUBLE WRAP PIPE W/POLYTHYLENE 10-MIL TAPE TO ELECTRICALLY ISOLATE IT FROM THE CLAMP.
10 3/8" U-BOLT 6061-T6 ALUM. SIZE TO MATCH NEW HANDRAIL.
11 ∠1/4" X 2" X 2" .316 SS. LENGTH TO FIT. FASTEN TO OVERHEAD W/316 SS 3/4" DRILLED IN ANCHORS.
12 3/8" PLATE, 316 SS.
13 3/8" PLATE. WIDTH = 1/2 NOM. PIPE DIA. BEND TO SUIT PIPE.
14 ATTACH TV-1P PIPE COUPLING, CENTERED AT STRAP. TV-1P.
15
16 316 SS BOLT, NUTS, AND WASHERS, 3/4-INCH.
17 SEE DETAIL 3 32 32
18 3/16" STEEL PLATE. SIZE TO SUIT SEAL WATER ENCLOSURE.
19 4 X 5.4 CHANNEL LENGTH 48" MIN.
20 NON-POTABLE WATER PIPE.
21 1/2 X 8 X 8 BASE PLATE. HOT DIP GALVANIZE, 18, 19, AND 21 AFTER FABRICATION.
22 1/2" GALVANIZED DRILLED ANCHORS, MIN. 4" LONG.
23 DRY PACK GROUT MIN. 1/2" UNDER BASE PLATE. KEEP 2" HOLE CLEAR.
24 TV-1P (4" SHOWN).
25 TV-1P TEE.
26 TV-1P REDUCER BUSHINGS SXS.
27 3/4" BRONZE 125 LB. GATE VALVE, UNION BONNET, RISING STEM, THREADED, SOLID DISC.
28 TV-1P 3/4" SXT NIPPLE.
29 8" FLEX. COUPLING (TYP.) FUSION EPOXY LINED AND COATED.
30 8 X 8 X 24" SUPPORT BLOCK (TYP. OF 3).
31 8" PLUG VALVE. ALL HARDWARE TO BE 316 SS.
32 6 X 8 X 12 SUPPORT BLOCK.
33 MSS SP-69 TYPE 26 SUPPORT H.D. GALV. W/GALV. ANCHOR BOLTS EMBEDDED IN SLAB MIN. 3 INCHES DEEP. (TYP. OF 3).
34 FORT BAKER INFLUENT VALVE BOX TOP OF WALL TO BE SLOPED AND 6 INCHES ABOVE HILL GRADE. REINFORCING #4 E.W. WALLS AND FLOOR. CONSTRUCT BOX PRIOR TO MAKING PIPING MODIFICATIONS. MODIFICATIONS TO BE MADE WHEN AUTHORIZED BY THE ENGINEER.
35 EXISTING FORT BAKER 8" C.I. INFLUENT LINE. CUT 7'-1" ± SECTION OUT TO FIT NEW PIPING.
36 NEW 8" T.V-1P FORT BAKER PRIMARY BYPASS LINE. WRAP LINE W/MIN. 1" POLYURETHANE FOR EXPANSION THROUGH WALL.
37 8" T.N-7P SPOOL F X PE TYP. OF 2.
38 8" T.N-7P TEE. CAST SUPPORT BLDG. AFTER INSTALLATION.
39 #3 REBAR 6" X 8" TYP. OF 8 PER SUPPORT BLOCK FOR THREE BLOCKS.
40 #3 REBAR 6" X 8" TYP. OF 6 PER SUPPORT BLOCK FOR ONE BLOCK.
41 3" Ø DRAIN HOLE. PROVIDE PEA GRAVEL DRAINAGE CHANNEL DOWN HILL.
42 BOLTS, NUTS AND WASHERS TO BE AISI TYPE 316 SS OR NAVAL BRONZE. TIGHTEN FROM THE DRY SIDE.
43 LINK TYPE SEAL.
44 DRY SIDE OF THE WALL.
45 WET SIDE OF THE WALL
46 PIPE SLEEVE MIN ¾" WALL W/⅛" X 3" (MIN) WIDE FLANGE AT CENTER OF WALL. HOT DIP GALVANIZE AFTER FABRICATION. IF HOLE IS CORE DRILLED, SLEEVE IS OMITTED.

GRAPHIC SCALE
1/2" = 1'-0"
0 1 2 3 4 5

Record Drawing
These record drawings have been prepared as part of the basic construction contract and furnished by Jenks, Manes/Jenks Shilson is not responsible for any errors or omissions in this document as a result of information provided by others.
Dated APR. 29, 19 82

Record Drawing
These record drawings have been prepared as part of the basic construction contract and furnished by Jenks, Manes/Jenks Shilson is not responsible for any errors or omissions in this document as a result of information provided by others.
Dated

Revised	Description	Submit.	Appr'd.	Date
	Refer to Tracing for Latest Revision			

Reference Information and Notes:

REFER TO THE NOTE WITH THIS NUMBER

Designed JHF
Drawn JHF
Checked JHF
Date 1-29-81

Wastewater Plant Improvements C-06-2464
Sausalito - Marin City Sanitary District

Kennedy/Jenks Engineers San Francisco
Submitted: Walter P. Yamna — 09370
Approved: Robert J. Cruse

MISCELLANEOUS DETAILS

Scale AS SHOWN
Job No. 0112
Sheet M-32 of

41

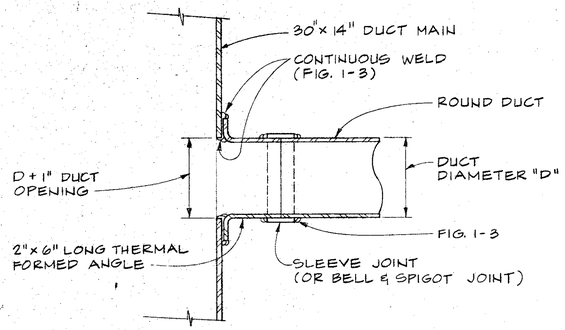

BANCH-DUCT CONNECTION DETAIL (1 / 33 2 33)
NO SCALE

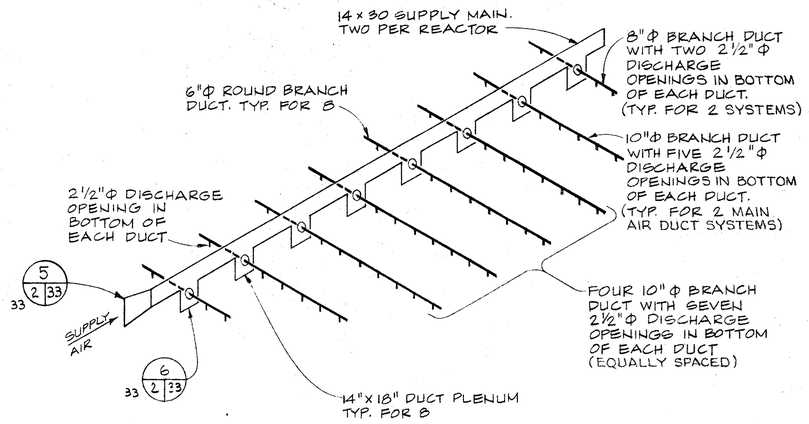

AIR FLOW DIAGRAM
NO SCALE

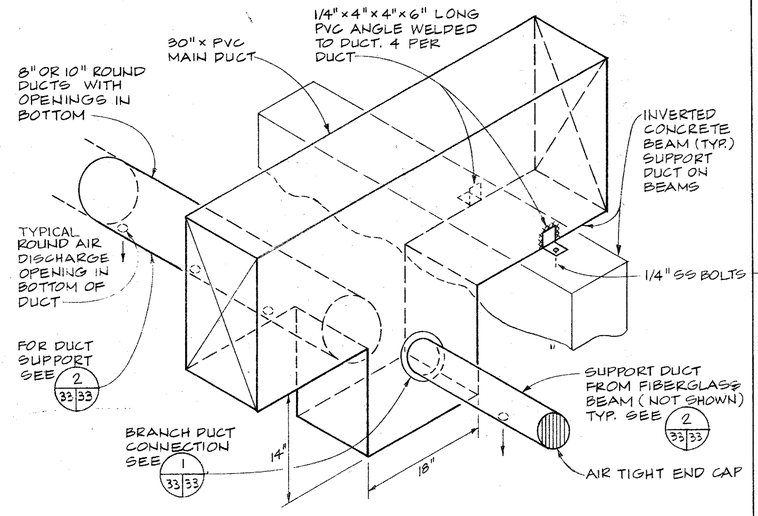

ISOMETRIC DIAGRAM DETAIL (6 / 2 33 33)
NO SCALE

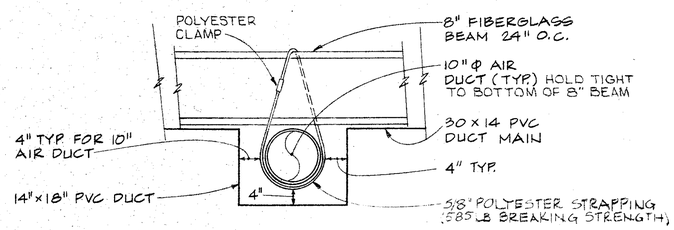

DUCT HANGER DETAIL (2 / 33 33)
NO SCALE

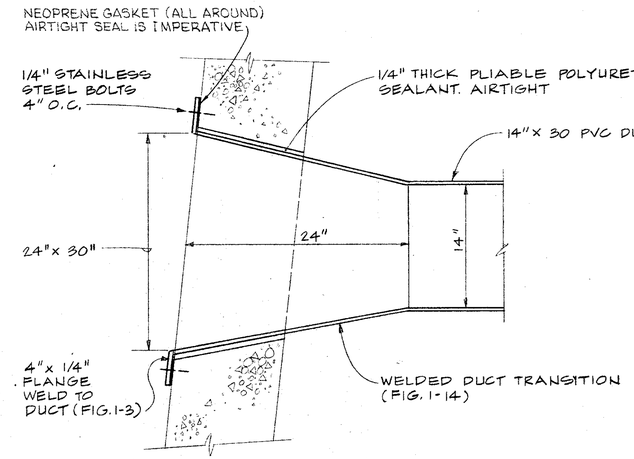

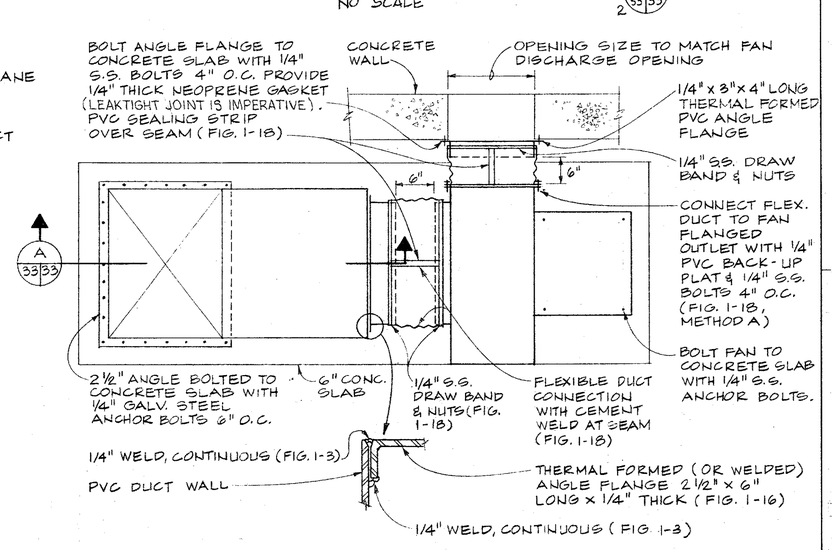

PLAN- FAN INSTALLATION DETAIL (7 / 2 33)
(TYP OF 2) NO SCALE

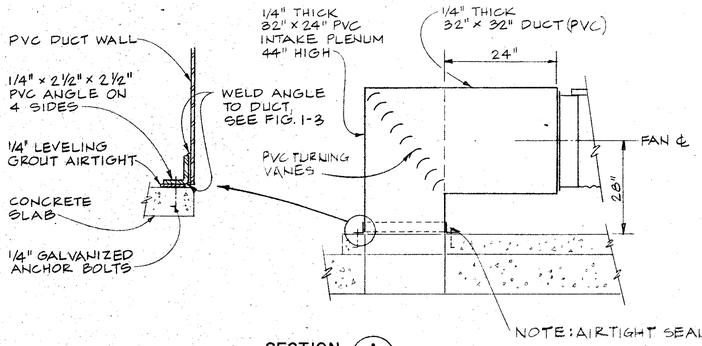

SECTION (A / 33 33)
NO SCALE

PVC DUCT THRU CONCRETE WALL DETAIL (5 / 2 33)
NO SCALE

NOTE

1. SEE SMACNA, THERMOPLASTIC DUCT (PVC) CONSTRUCTION MANUAL FOR ALL FIG. SHOWN ON THIS SHEET. EXAMPLE: (FIG. 1-14)

Record Drawing
These record drawings have been prepared on paper, on the basis of information compiled and furnished by others. Kennedy/Jenks Engineers is not responsible for any errors or omissions in the documents as a result of incomplete drawings by others.
Dated APR. 29, 1988

Record Drawing
These record drawings have been prepared on paper, on the basis of information compiled and furnished by others. Kennedy/Jenks Engineers is not responsible for any errors or omissions in the documents as a result of incomplete drawings by others.
PAPER RECORD DRAWING

Revised	Description	Submit.	Appr'd.	Date
Refer to Tracing for Latest Revision				

Reference Information and Notes:

FOR TYPICAL EQUIPMENT ANCHORAGE SEE SHEET M-24

Designed ML
Drawn EJV
Checked JHF
Date 1-29-81

Wastewater Plant Improvements C-06-2464
Sausalito - Marin City Sanitary District
Kennedy/Jenks Engineers San Francisco
Submitted: Walter F. Bassman C9370 Approved: Robert J. Kenny

FIXED FILMED REACTORS
AIR SYSTEM DETAILS

Scale NONE
Job No. 0112
Sheet M-33 of

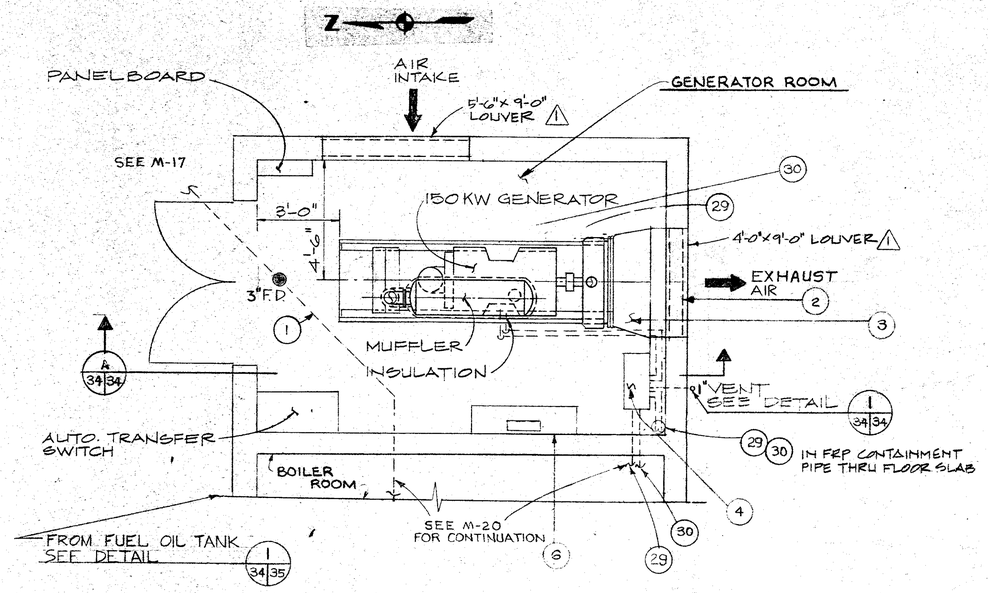

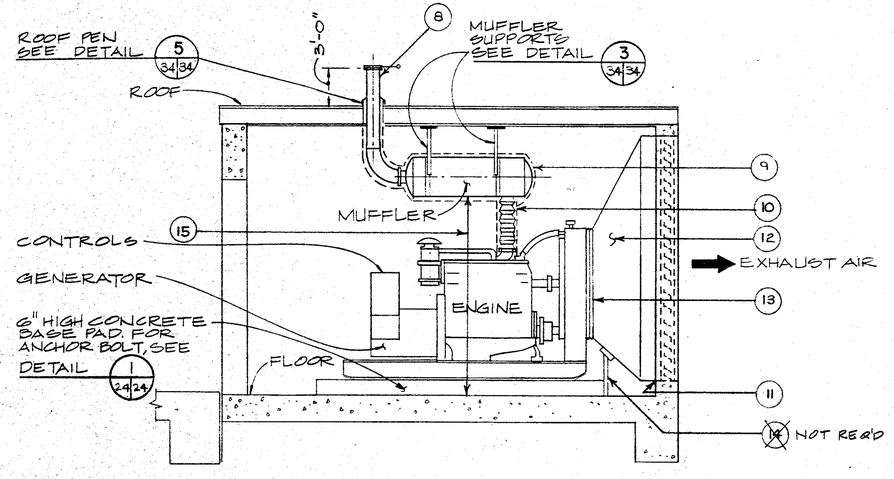

SECTION A
SCALE: 3/8"=1'-0" 34|34

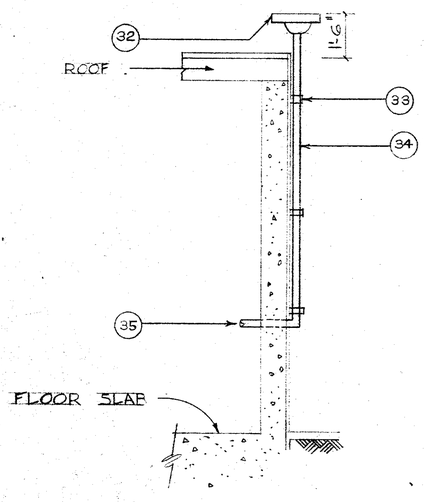

DAY TANK VENT DETAIL 1 34|34
NOT TO SCALE

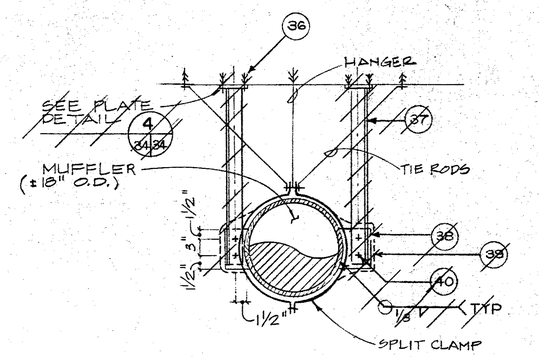

⚠2 TYPICAL MUFFLER SUPPORT DETAIL 3 34|34
NOT TO SCALE

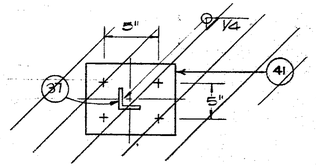

PLATE DETAIL 4 34|34
NOT TO SCALE

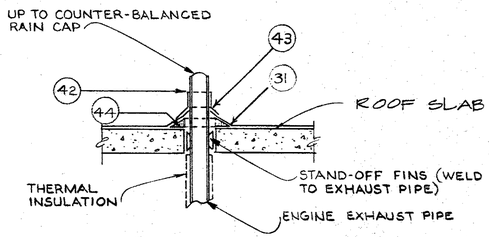

EXHAUST PIPE PENETRATION DETAIL 5 34|34
NOT TO SCALE

1 3" TV-2P DRAIN
2 ~~8" X 12" LOUVER OF 18 GA. GALV. STEEL.~~
3 RADIATOR AIR DISCHARGE DUCT (MAKE AIR TIGHT)
4 10 GALLON DAY TANK AND TRANSFER PUMP ASSEMBLY STANDING ON 4" HIGH BASE PAD. SECURE WITH ½" EXPANSION ANCHORS.
5 ~~WALL MOUNTED DAY TANK LEVEL GAUGE (4'-6" ABOVE FLOOR).~~
6 BATTERIES AND CHARGER STANDING ON 4" HIGH CONCRETE BASE PAD. SECURE W/½" EXPANSION ANCHORS. ~~PROVIDE WOOD BASE UNDER BATTERIES~~
7 EXHAUST PIPE
8 EXHAUST PIPE W/COUNTER BALANCED RAIN CAP.
9 INSULATION.
10 FLEXIBLE EXHAUST.
11 MAKE AIR TIGHT JOINT ALL AROUND.
12 RADIATOR AIR DISCHARGE DUCT
13 FLEXIBLE NEOPRENE CONNECTION.
14 ~~1½" X 1½" X ¼" GALV. STEEL ANGLE DUCT SUPPORT LEG. SECURE TO FLOOR SLAB W/ EXPANSION BOLTS.~~
15 PROVIDE MAXIMUM HEIGHT.
16 DELETED
17 "
18 "
19 "
20 "
21 "
22 "
23 "
24 "
25 "
26 "
27 "
28 "
29 1" TX-5P FUEL OIL RETURN
30 3/4" TX-5P FUEL OIL SUPPLY
31 ROOFING
32 DAY TANK VENT
33 PIPE CLAMP (TYPICAL)
34 1" SCHED. 40 GALVANIZED STEEL VENT PIPE
35 VENT FROM DAY TANK
36 ~~FOUR 3/4" EXPANSION ANCHORS (TYPICAL).~~
37 ~~3½" X 3½" X 3/8" GALV. STEEL ANGLE~~
38 ~~3/8" STEEL PLATE.~~
39 ~~THREE STANDOFFS AT 120°. FABRICATE FROM ½" STEEL PLATE.~~
40 ~~3/4" H.S. BOLT IN 13/16" DIA. HOLES IN PLATE AND 13/16" X 1-5/8" VERTIAL SLOTTED HOLES IN ANGLE.~~
41 ~~8" X 8" X 3/8" PLATE~~
42 WELD WATER TIGHT.
43 UMBRELLA
44 CANT

Record Drawing
These record drawings have been prepared, in part, on the basis of information compiled and furnished by others. Kennedy/Jenks/Chilton is not responsible for any errors or omissions in this document as a result of information provided by others.
APP: 4-29 88

GRAPHIC SCALE
3/8"=1'-0" 0 5 10

RECORD DRAWING

Revised	Description	Submit.	Appr'd.	Date
⚠2	SUBSTITUTION			
⚠1	C.O. NO. 50			

Refer to Tracing for Latest Revision

Reference Information and Notes:

FOR TYPICAL EQUIPMENT ANCHORAGE SEE SHEET M-24
REFER TO THE NOTE WITH THIS NUMBER

Designed	EB
Drawn	CB/NL
Checked	JHF
Date	1-29-81

Wastewater Plant Improvements C-06-2464
Sausalito - Marin City Sanitary District

Kennedy/Jenks Engineers — San Francisco

Submitted: Walter Hamman C9370 Approved: Fred J. Disney

ENGINEER GENERATOR ROOM

Scale 3/8"= 1'-0"
Job No. 0112
Sheet M-34 of

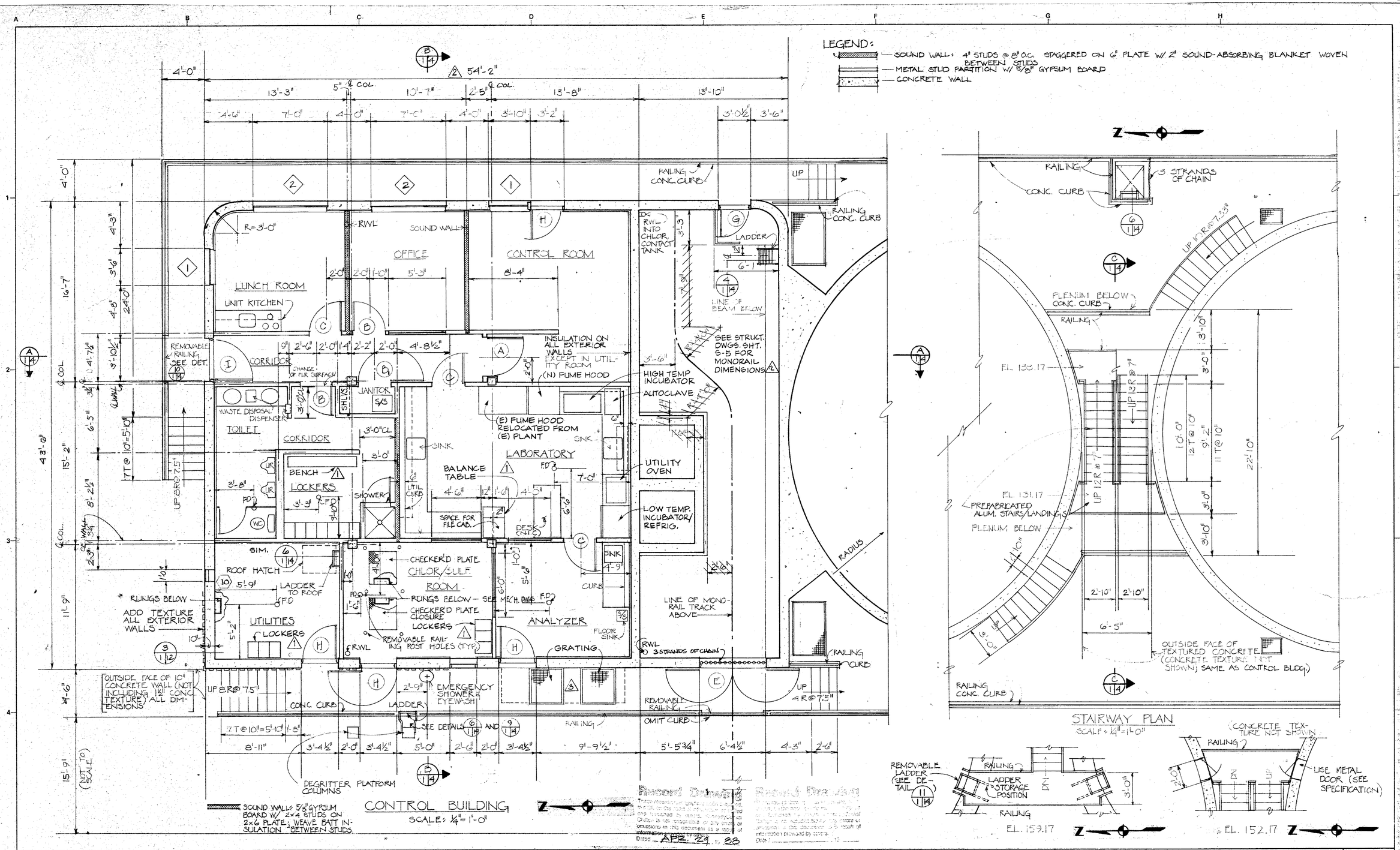

Revised	Description	Submit.	Appr'd.	Date
3	C.O. NO. 16			
2	CLARIFICATION			
1	FIELD CHANGE			

Refer to Tracing for Latest Revision

Reference Information and Notes:
* NOTE: EMERGENCY EXIT FROM CHLORINE CONTACT TANK IF HATCHES IN CHLOR/SULF. ROOM ARE SHUT; PUSH OUT SCREEN AT TOP OF LADDER RUNGS

GRAPHIC SCALE 1/4" = 1'-0" 0 5 10

RECORD DRAWING

Designed JWC
Drawn JAC
Checked JWC
Date 1-29-81

Wastewater Plant Improvements C-06-2464
Sausalito - Marin City Sanitary District
Kennedy/Jenks Engineers San Francisco
Submitted: Walter F. Hansman
Approved: Robert J. Amen

CONTROL BUILDING PLAN

Scale 1/4" = 1'-0"
Job No. 0112
Sheet A-1 of

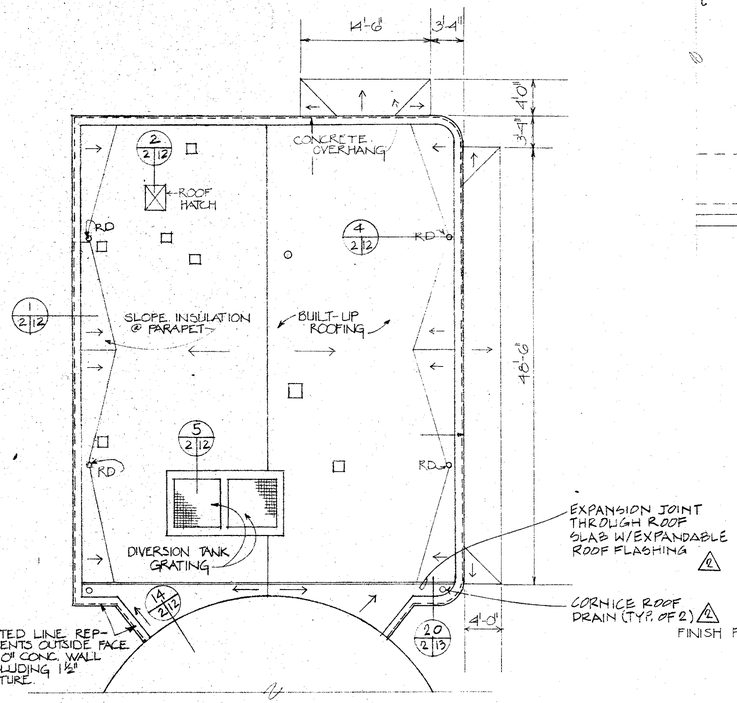

NOTE: ALL DIMENSIONS ARE TO OUTSIDE EDGE OF PARAPET

NOTE: PLUMBING VENTS NOT SHOWN. SEE M-14

NOTE: VERIFY OPENINGS SHOWN (VENTILATION) W/ M-15. COORDINATE W/ HVAC INSTALLATION.

ROOF PLAN CONTROL BLDG

SCALE: 1/8" = 1'-0"

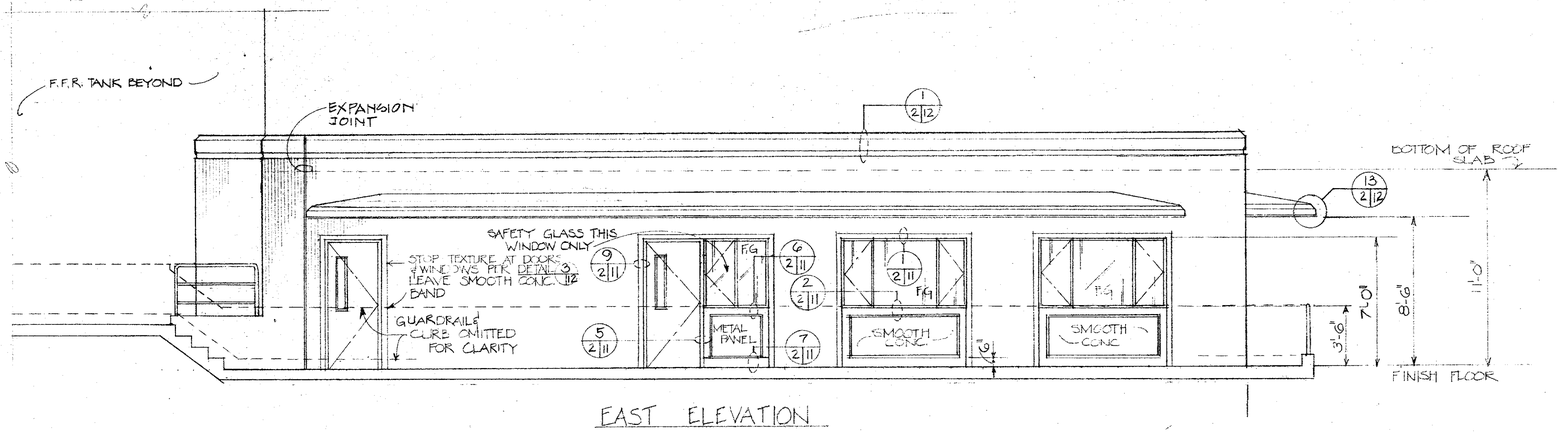

EAST ELEVATION

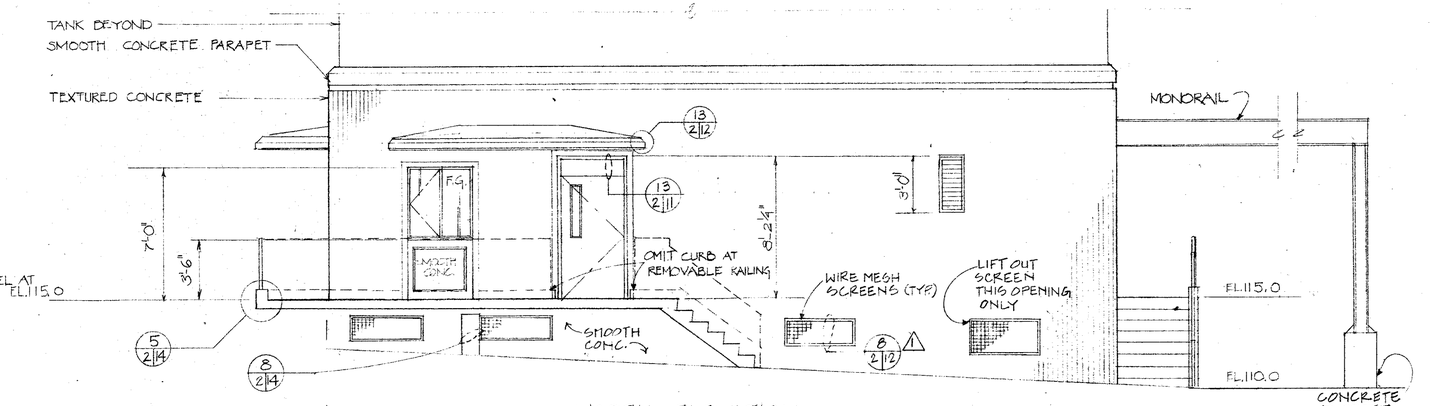

NORTH ELEVATION

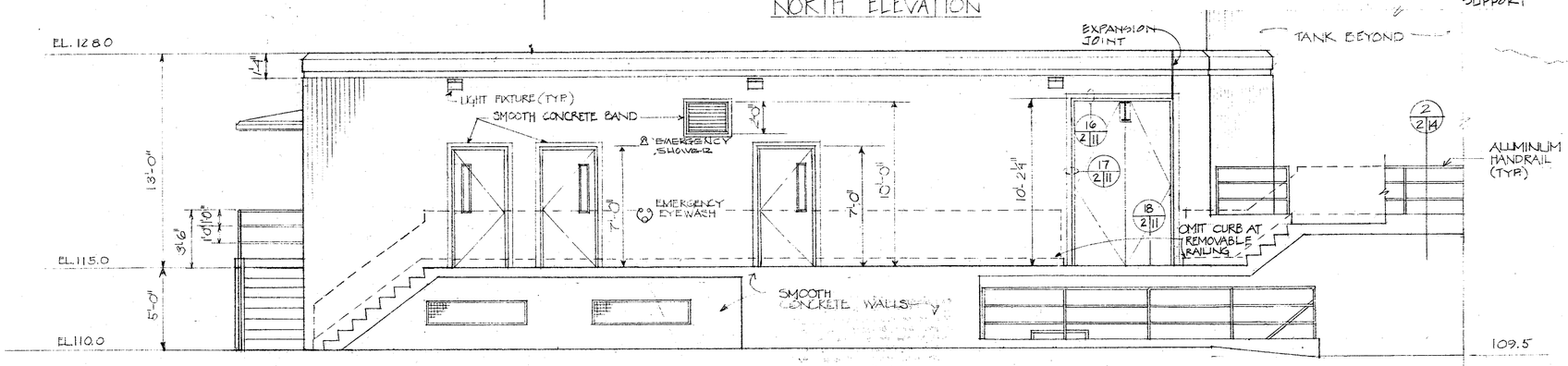

WEST ELEVATION

GRAPHIC SCALE

1/8" = 1'-0" 0 5 10 15 20 25 1/4" = 1'-0" 0 5 10

Revised	Description	Submit.	Appr'd.	Date
2	C.O. NO.28			
1	C.O. NO.3			

Refer to Tracing for Latest Revision

Reference Information and Notes:

Record Drawing

These record drawings have been prepared, in part, on the basis of information or material furnished by others. Kennedy/Jenks/Chilton is not responsible for any errors or omissions in the documents as a result of information provided by others.

Dated APR. 29 19 88

Record Drawing

Designed	JWC
Drawn	JAC
Checked	JWC
Date	1-29-81

Wastewater Plant Improvements C-06-2464
Sausalito - Marin City Sanitary District

Kennedy/Jenks Engineers — San Francisco

Submitted: Walter E. Hamman 05370

Approved: Robert J. Avery

CONTROL BUILDING ELEVATIONS

Scale: 1/4" = 1'-0"
Job No.: 0112
Sheet: A-2 of

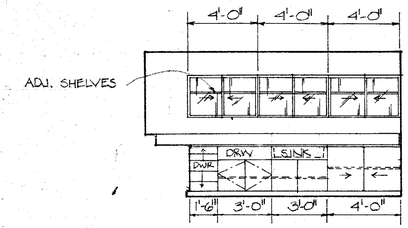

NORTH

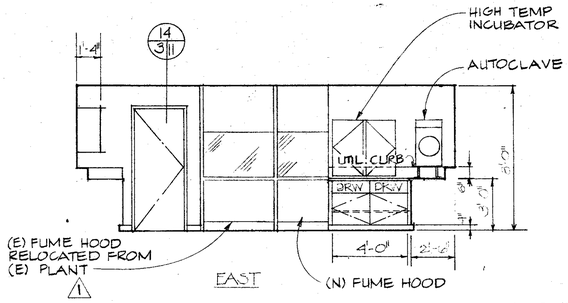

EAST

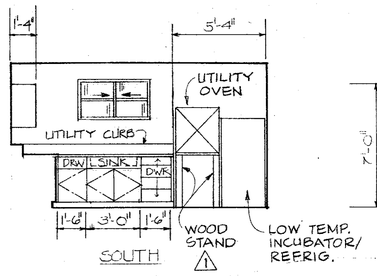

SOUTH

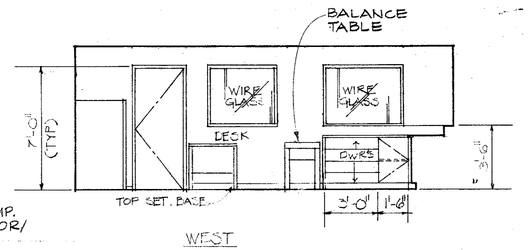

WEST

LABORATORY

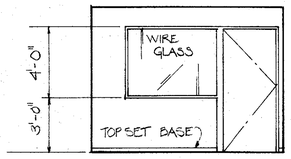

WEST

OFFICE

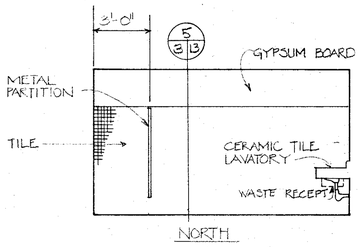

NORTH

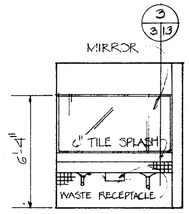

EAST

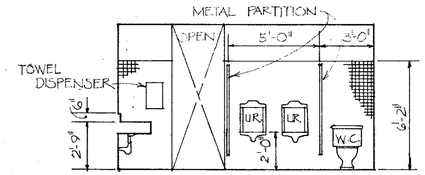

SOUTH

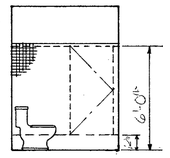

WEST

TOILET ROOM

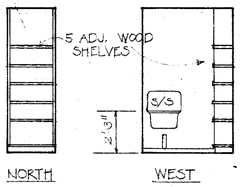

NORTH WEST

JANITOR

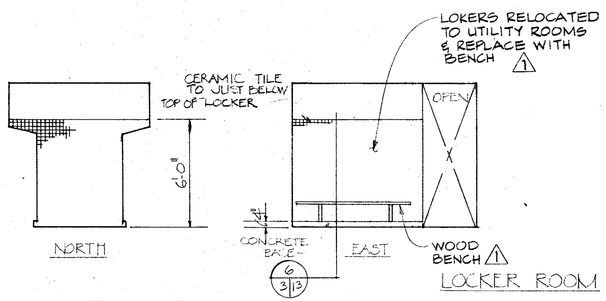

NORTH EAST

LOCKER ROOM

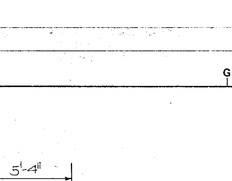

SOUTH

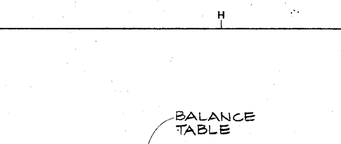

WEST

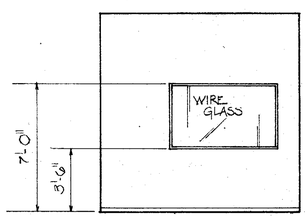

NORTH

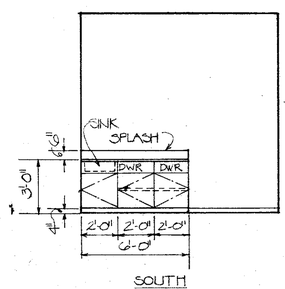

SOUTH

ANALYZER

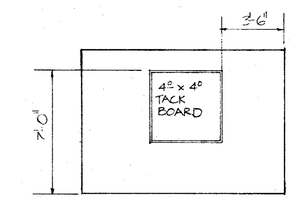

SOUTH

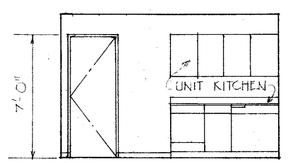

WEST

LUNCH ROOM

Record Drawing
These record drawings have been prepared, in part, on the basis of information compiled and furnished by others. Kennedy/Jenks/Chilton is not responsible for any errors or omissions in the documents as a result of information provided by others.
Dated APR 24 '88

GRAPHIC SCALE
1/4" = 1'-0"
0 5 10

Revised	Description	Submit.	Appr'd.	Date
1	FIELD CHANGE			

Refer to Tracing for Latest Revision

Reference Information and Notes:
1 SEE LAB EQUIPMENT SHOP DRAWING FOR ACTUAL DIMENSIONS OF FURNISHED LAB CABINETRY

Designed JWC
Drawn JAC
Checked JWC
Date 1/29/81

Wastewater Plant Improvements C-06-2464
Sausalito - Marin City Sanitary District

Kennedy/Jenks Engineers — San Francisco
Submitted: Walter Hamma — 6/9/87
Approved: Robert J. Chilton

CONTROL BUILDING INTERIOR ELEVATIONS

Scale 1/4" = 1'-0"
Job No. 0112
Sheet A-3 of

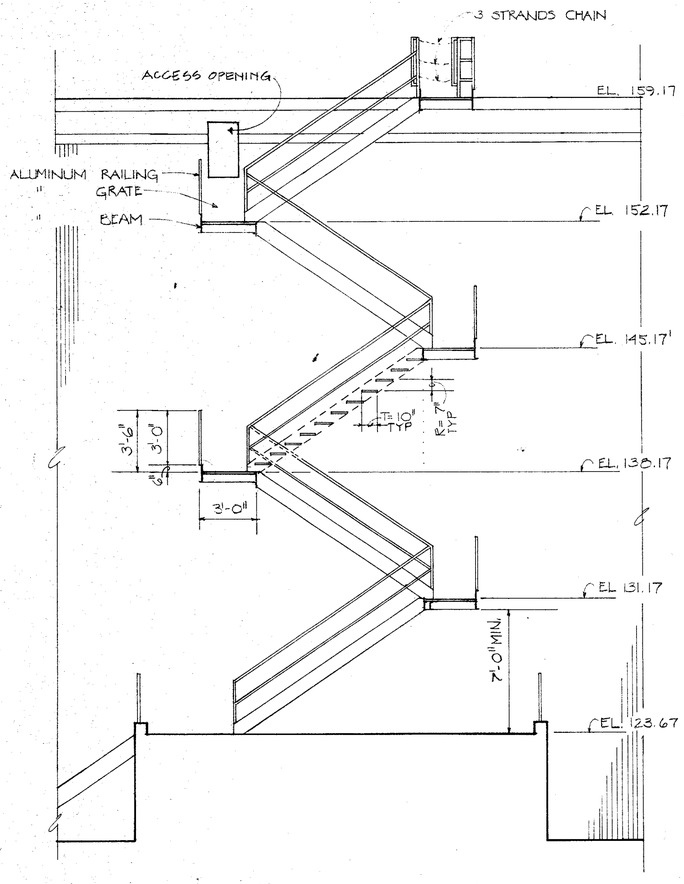

SECTION C-C
STAIRWAY AT FIXED FILM REACTOR
SCALE = 1/4" = 1'-0"
SEE DETAIL 1/4|11 FOR ADDITIONAL INFORMATION.

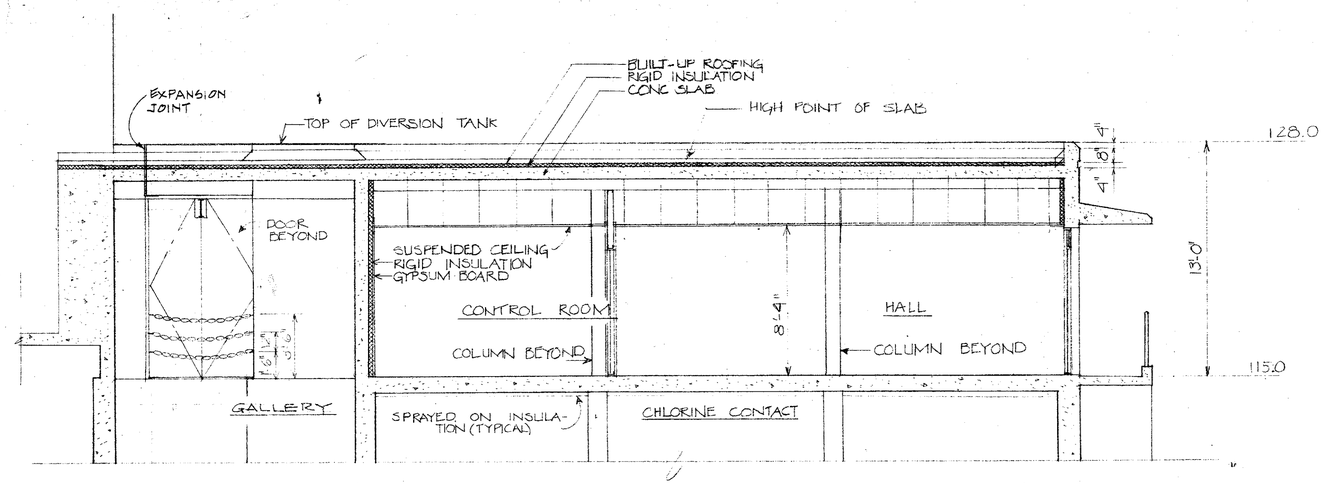

SECTION A-A

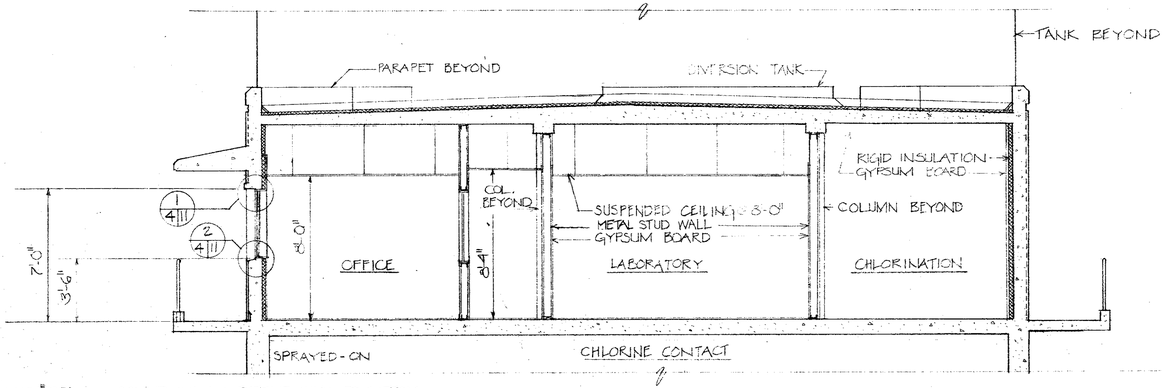

SOUND WALL: EXTEND WALL TO BOTTOM OF ROOF SLAB

SECTION B-B

GRAPHIC SCALE
1/4" = 1'-0" 0 5 10

Record Drawing
These record drawings have been prepared in part, on the basis of information compiled and furnished by others. Kennedy/Jenks/Chilton is not responsible for any errors or omissions in this document as a result of information provided by others.
Dated APR. 29 '82.

Revised	Description	Submit.	Appr'd.	Date
Refer to Tracing for Latest Revision				

Reference Information and Notes:

Designed	JWC
Drawn	JAC
Checked	JWC
Date	1/29/81

Wastewater Plant Improvements C-06-2464
Sausalito - Marin City Sanitary District

Kennedy/Jenks Engineers San Francisco

Submitted: Walter E. Kennedy C 9370 Approved: Robert J. Owen

CONTROL BUILDING
SECTIONS

Scale	1/4" = 1'-0"
Job No.	0112
Sheet	A-4
of	

49

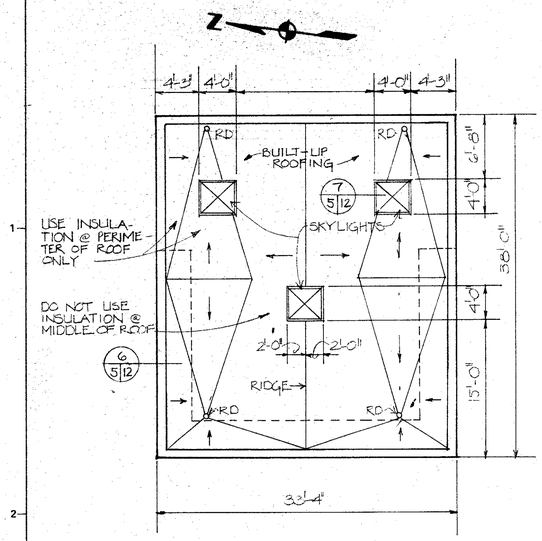

ROOF PLAN/CHLORINE STORAGE
SCALE: 1/8" = 1'-0"

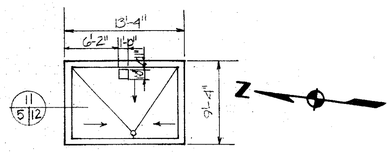

ROOF PLAN/
SAF. EQUIP. STOR.
SCALE: 1/8" = 1'-0"

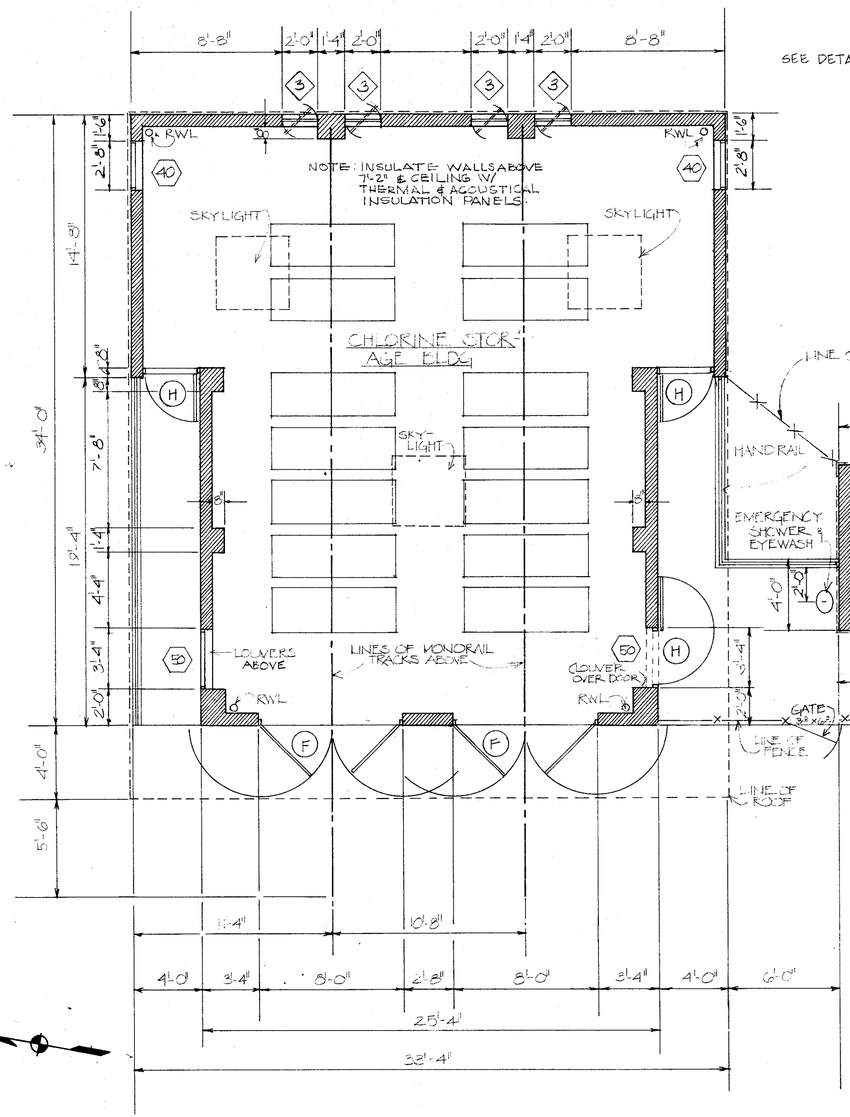

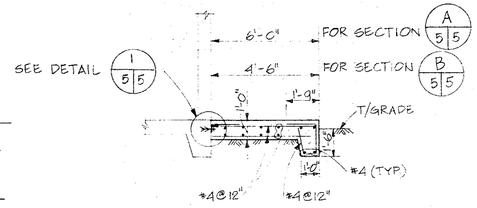

SECTION A/5/5 AS SHOWN
SCALE: 1/4" = 1'-0"

SECTION B/5/5 SIMILAR
NO SCALE

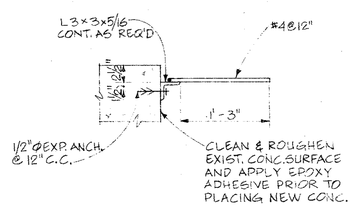

DETAIL 1/5/5
SCALE: 1" = 1'-0"

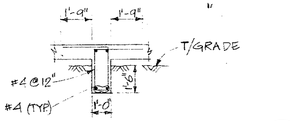

NOTE: FOR SLAB REINF. SEE SECTION A/5/5

SECTION C/5/5
SCALE: 1/4" = 1'-0"

CHLORINE STORAGE BLDG. | SAFETY EQUIPMENT STORAGE BUILDING | SULPHUR DIOXIDE STORAGE

ALL SCALE: 1/4" = 1'-0"

GRAPHIC SCALE
1/8" = 1'-0" 0 5 10 15 20 25 1/4" = 1'-0"
0 5 10

Revised	Description	Submit.	Appr'd.	Date
1	FIELD CHANGE			

Refer to Tracing for Latest Revision

Reference Information and Notes:

Record Drawing
These record drawings have been prepared, in part, on the basis of information compiled and furnished by others. Kennedy/Jenks/Chilton is not responsible for any errors or omissions in this document as a result of information supplied by others.
Dated APR. 24 19 82

Record Drawing
These record drawings have been prepared, in part, on the basis of information compiled and furnished by others. Kennedy/Jenks/Chilton is not responsible for any errors or omissions in this document as a result of information supplied by others.
Dated ____ 19 ____

Designed	JWC
Drawn	JAC
Checked	JWC
Date	1/29/81

Wastewater Plant Improvements C-06-2464
Sausalito - Marin City Sanitary District

Kennedy/Jenks Engineers — San Francisco

Submitted: Walter E. Kennedy C.E. 9370

Approved: Robert J. Avery

CHLORINE STORAGE AREA PLAN

Scale: 1/4" = 1'-0"
Job No. 0112
Sheet A-5 of

50

A-5

NOTES:
1. TYPICAL VERT. REINF. SHALL BE #4 @ 16" LAPPED 1'-9" WITH #4 DOWELS PROJECTING FROM FTG. BELOW. TYPICAL VERT. REINF. SHALL END IN A STANDARD HOOK IN TOP OF ROOF SLAB.
2. TYPICAL HORIZ. REINF. SHALL BE 1-#5 CONTINUOUS IN BOND BM UNITS @ TOP & BOTTOM OF WALL (EXCEPT AT DOORWAY) AND 1-#5 IN BOND BM UNITS SPACED NOT MORE THAN 4'-0" ALONG HEIGHT OF WALL. LAP SPLICES 2'-2"
3. ALL ADDITIONAL REINF. IS SHOWN ON ELEVATIONS
4. ALL ADDIT. REINF. SHALL EXTEND AT LEAST 2'-0" PAST OPNG. IF SUCH EXTENSION IS NOT POSSIBLE, BARS SHALL TERMINATE IN STD. HOOKS IN TOP OF ROOF SLAB.
5. ALL ADDITIONAL REINF. SHALL BE SPLICED WITH DOWELS OF SAME SIZE PROJECTING FROM FTG. BELOW, LAP #5 BARS 3'-10", LAP #6 BARS 4'-6", LAP #7 BARS 5'-3"

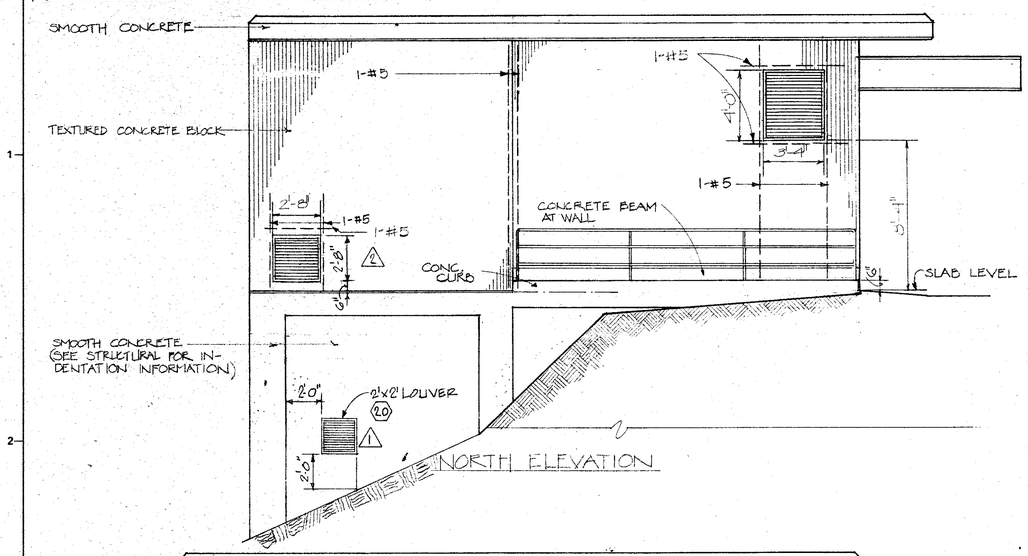

NORTH ELEVATION

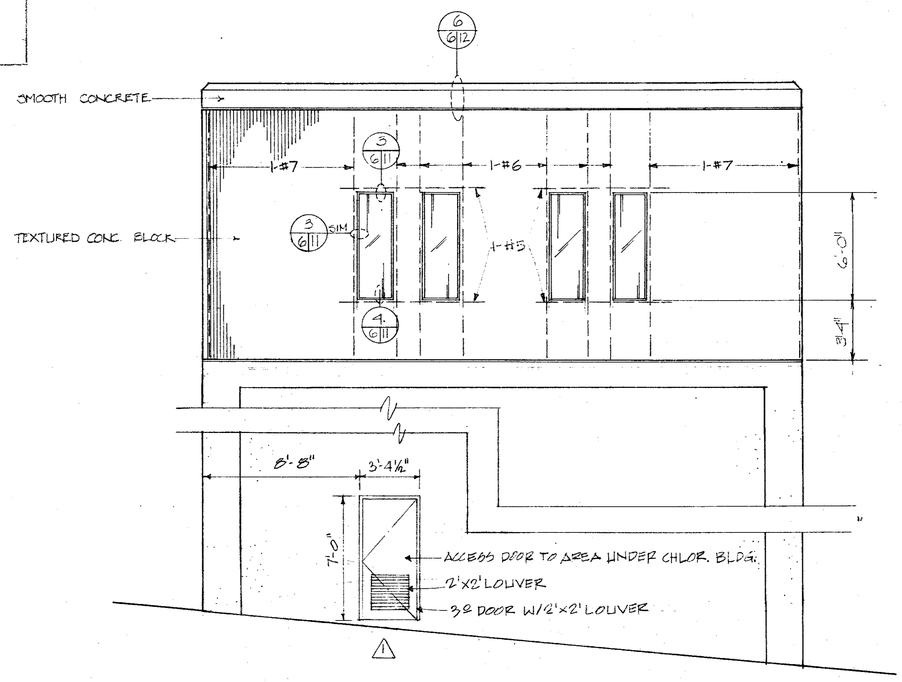

EAST ELEVATION

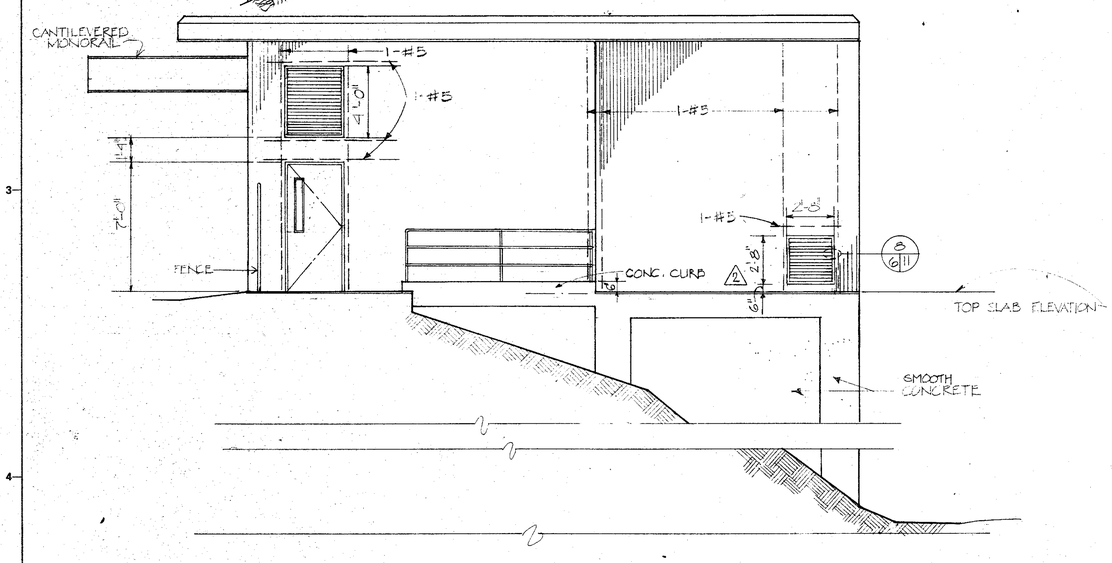

SOUTH ELEVATION

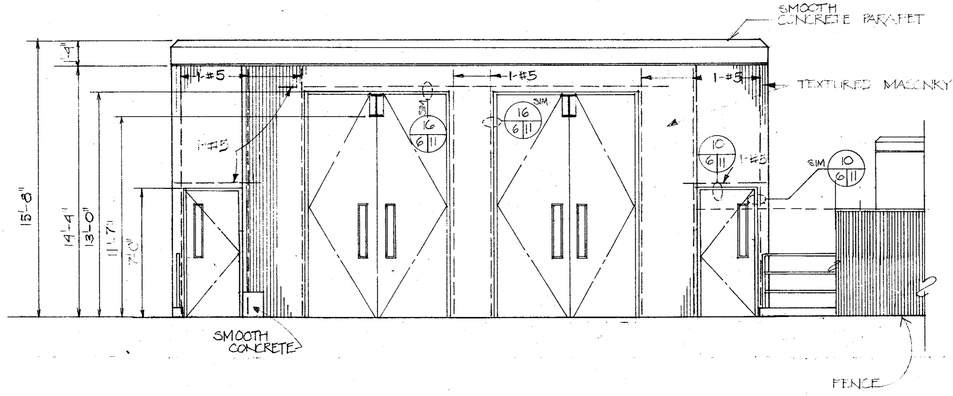

WEST ELEVATION

Record Drawing
These record drawings have been prepared, in part, on the basis of information compiled and furnished by others. Kennedy/Jenks/Chilton is not responsible for any errors or omissions in this document as a result of information provided by others.
Dated APR. 29, 1988

Record Drawing
These record drawings have been prepared, in part, on the basis of information compiled and furnished by others. Kennedy/Jenks/Chilton is not responsible for any errors or omissions in this document as a result of information provided by others.
Dated

GRAPHIC SCALE
1/4" = 1'-0" 0 5 10

Revised	Description	Submit.	Appr'd.	Date
2	FIELD CHANGE			
1	C.O. NO. 9			

Refer to Tracing for Latest Revision

Reference Information and Notes:

Designed JWC
Drawn JAC
Checked JWC
Date 1/29/81

[redacted]
Kennedy/Jenks Engineers San Francisco
Submitted: Walter F. Hammann
Approved: Robert J. Owen

CHLORINE STORAGE BUILDING
ELEVATIONS

Scale 1/4" = 1'-0"
Job No. 0112
Sheet A-6 of

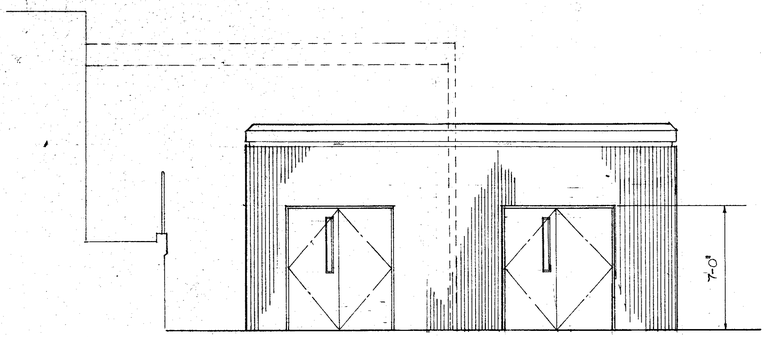

NORTH

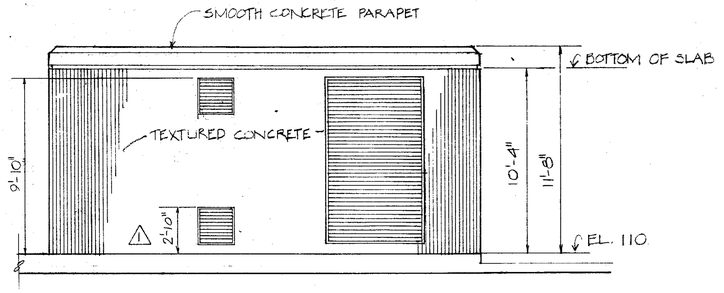

SOUTH

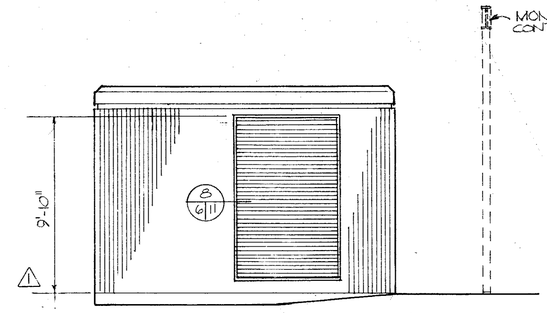

EAST

ENGINE GENERATOR BUILDING ELEVATIONS

EAST ELEVATION

WEST ELEVATION

SAFETY EQUIPMENT STORAGE BUILDING

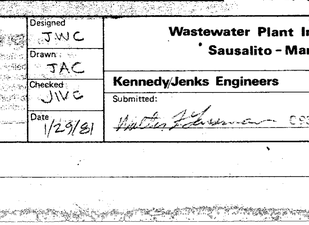

ENGINE GENERATOR ROOF PLAN

SCALE: 1/8" = 1'-0"

ENGINE GENERATOR BUILDING FLOOR PLAN

SCALE: 1/4" = 1'-0"

EXTERIOR SOUTH ELEVATION

SULPHUR DIOXIDE BLDG

INTERIOR SOUTH ELEVATION

DETAIL 1/7

SCALE: 1/2" = 1'-0"

GRAPHIC SCALE

1/8" = 1'-0" 0 5 10 15 20 25

1/4" = 1'-0" 0 5 10

1/2" = 1'-0" 0 1 2 3 4 5

Revised	Description	Submit.	Appr'd.	Date
1	C.O. NO. 50			

Refer to Tracing for Latest Revision

Reference Information and Notes:

Record Drawing

These record drawings have been prepared, in part, on the basis of information compiled and furnished by others. Kennedy/Jenks/Chilton is not responsible for any errors or omissions in this document as a result of information supplied by others.

Dated APR. 29 19 82

Designed: JWC
Drawn: JAC
Checked: JWC
Date: 1/29/81

Wastewater Plant Improvements C-06-2464
Sausalito - Marin City Sanitary District

Kennedy/Jenks Engineers San Francisco

Submitted: Kathleen Lehman C 9379 Approved: Robert J. Avery

SECONDARY STRUCTURE
NORTH ELEVATION

Scale: 1/4" = 1'-0"
Job No. 0112
Sheet A-7 of

52

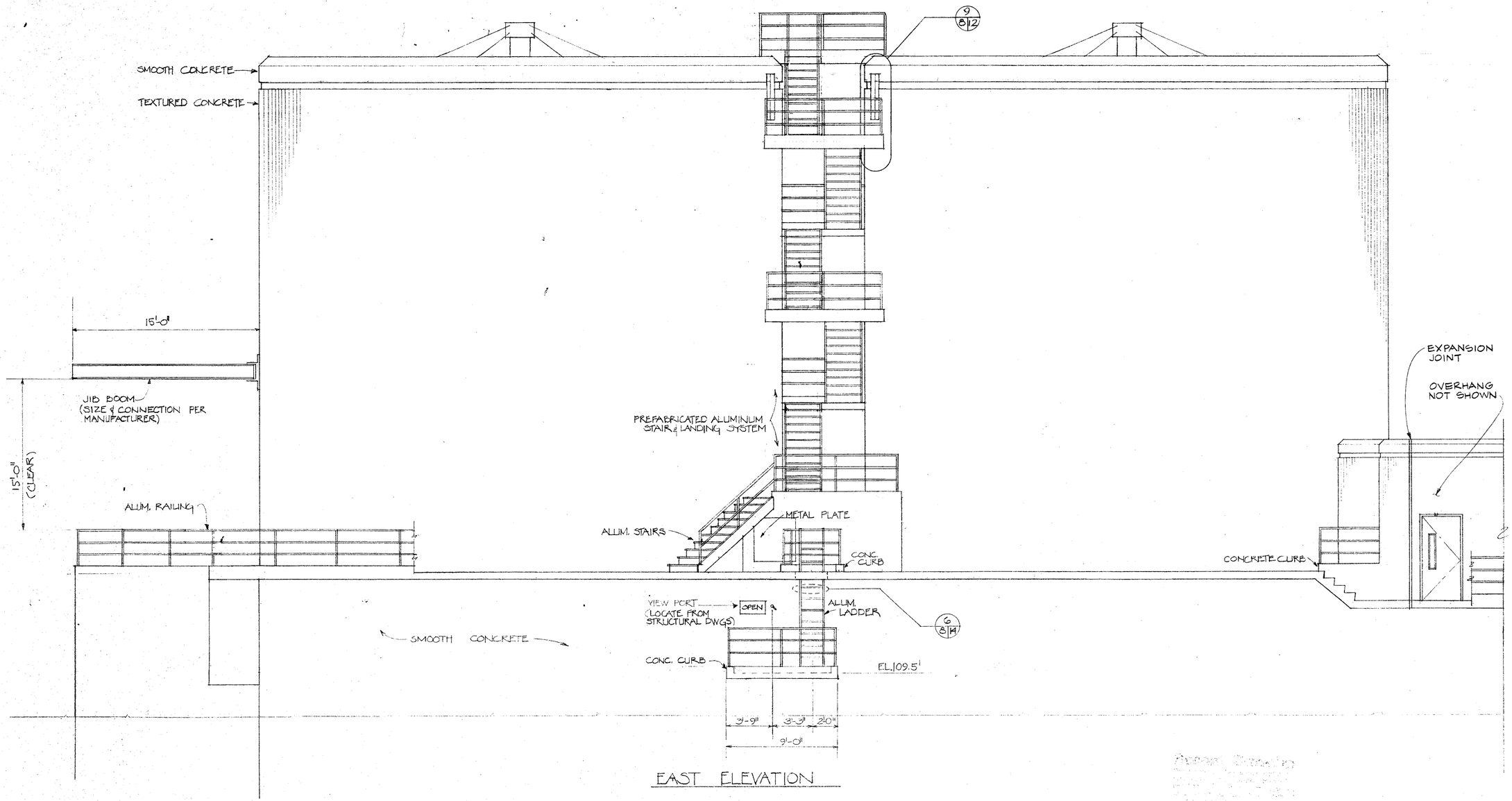

EAST ELEVATION

GRAPHIC SCALE

1/4" = 1'-0" 0 5 10

Revised	Description	Submit.	Appr'd.	Date
Refer to Tracing for Latest Revision				

Reference Information and Notes:

Record Drawing

These record drawings have been prepared, in part, on the basis of information compiled and furnished by others. Kennedy/Jenks/Chilton is not responsible for any errors or omissions in this document as a result of information provided by others.

Dated APR 29, 19 82

Designed	JWC
Drawn	JAC
Checked	JWC
Date	1/29/81

Wastewater Plant Improvements **C-06-2464**
Sausalito - Marin City Sanitary District

Kennedy/Jenks Engineers **San Francisco**

Submitted: C 5370 Approved:

SECONDARY STRUCTURE
EAST ELEVATION

Scale 1/4" = 1'-0"
Job No. 0112
Sheet A-8 of

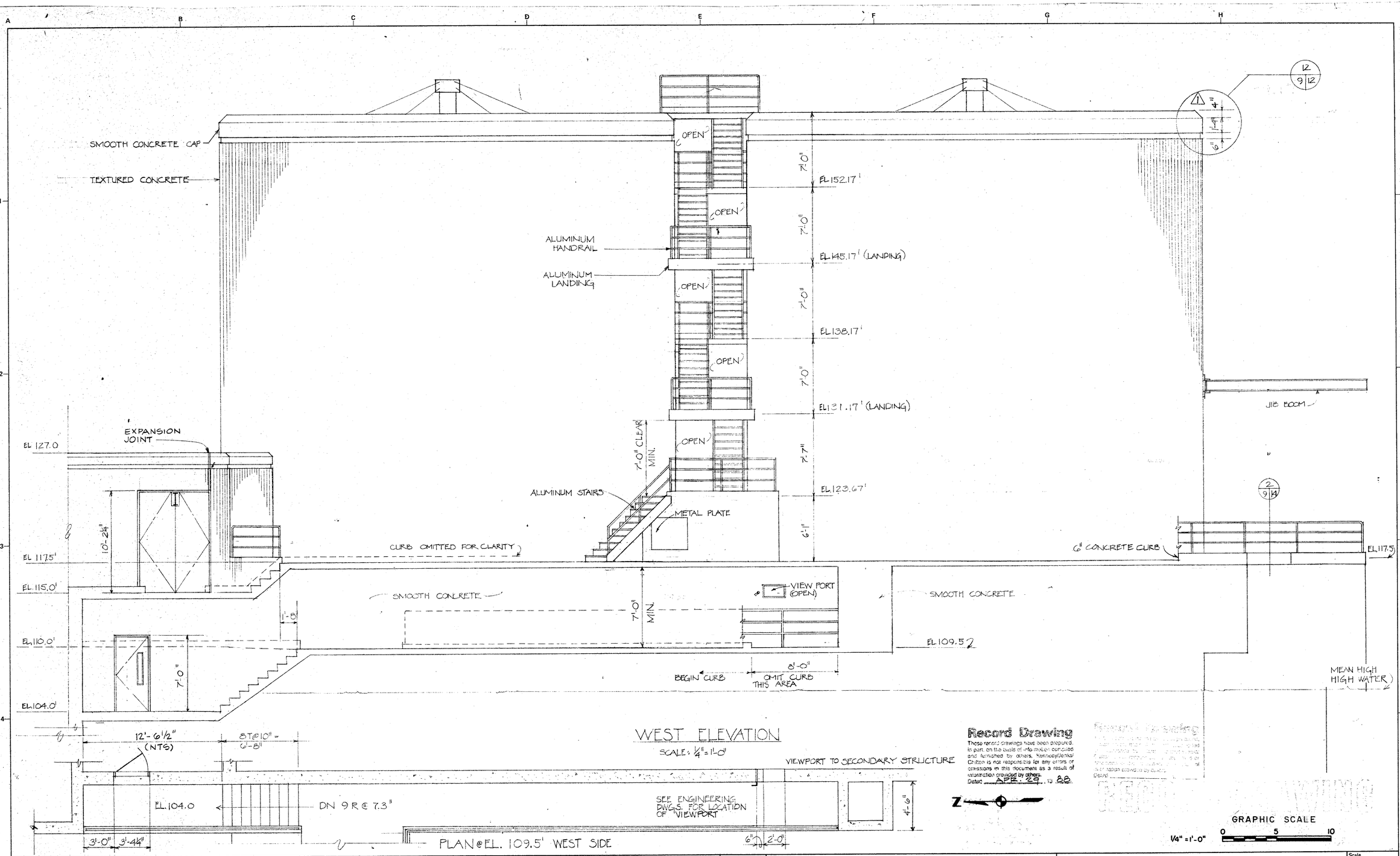

Record Drawing

These record drawings have been prepared, in part, on the basis of information compiled and furnished by others. Kennedy/Jenks/Chilton is not responsible for any errors or omissions in this document as a result of information provided by others.

Dated APR. 29, 19 88

Revised	Description	Submit.	Appr'd.	Date
1	FIELD CHANGE			

Refer to Tracing for Latest Revision

Reference Information and Notes:

Designed JWC
Drawn JAC
Checked JWC
Date 1/29/81

Wastewater Plant Improvements C-06-2464
Sausalito - Marin City Sanitary District

Kennedy/Jenks Engineers **San Francisco**

Submitted: Walter F. Gamma C9370
Approved: Robert J. Amen

SECONDARY STRUCTURE
WEST ELEVATION

Scale ¼" = 1'-0"
Job No. 0112
Sheet A-9 of

54

FINISH SCHEDULE — ALL BUILDINGS

ROOM NAME	FLOORS: CONCRETE	RESILIENT FLOOR	CERAMIC TILE	EPOXY PAINTED SURFACE ⚠1	WALLS: GYPSUM BOARD	WATER RESISTANT GYPSUM BD.	CERAMIC TILE WAINSCOTT	MASONRY	CONCRETE	THERMAL & ACOUSTICAL INSULATING PANELS	CEILING: SUSPENDED ACOUSTICAL TILE	CONCRETE	WATER RESISTANT GYPSUM BOARD	GYPSUM BOARD	BASE: TOP SET	REMARKS
INTERIOR FINISHES (1A) LAYTEX (1B) ENAMEL (2) VINYL WALLCOVERING (3) (OMIT) (4) FACTORY FINISH (5) COLOR HARDENER SEE SPECIFICATION FOR ADDITIONAL INFORMATION																
CONTROL BLDG.																
OFFICE		(4)			(2)						(4)				(4)	
LUNCH ROOM		(4)			(2)						(4)				(4)	
CONTROL ROOM		(4)			(1A)						(4)				(4)	
CORRIDOR		(4)			(2)						(4)				(4)	
TOILET			(4)		(1B)	(1B)	(4)						(1B)			
LOCKERS			(4)		(1B)	(1B)	(4)						(1B)			
LABORATORY		(4)			(1B)						(4)				(4)	
UTILITIES	(X)	(4)			(1A)				(1A)			(1A)			(4)	
CHLOR/SULF. ROOM ⚠1	(X)	(4)			(1A)							(1A)			(4)	
ANALYZER	(X)	(4)			(1A)				(1A)			(1A)			(4)	
JANITOR'S CLOSET		(4)			(1A)									(1A)	(4)	
EQUIPMENT STORAGE BLDG.	(5)							(1A)				(1A)				
GENERATOR BLDG.	(5)								(1A)			(1A)				
CHLORINE & SO_2 STORAGE BLDGS.	(X)			(4)				(1A)		(4)		(1A)				

⚠1

DOOR SCHEDULE

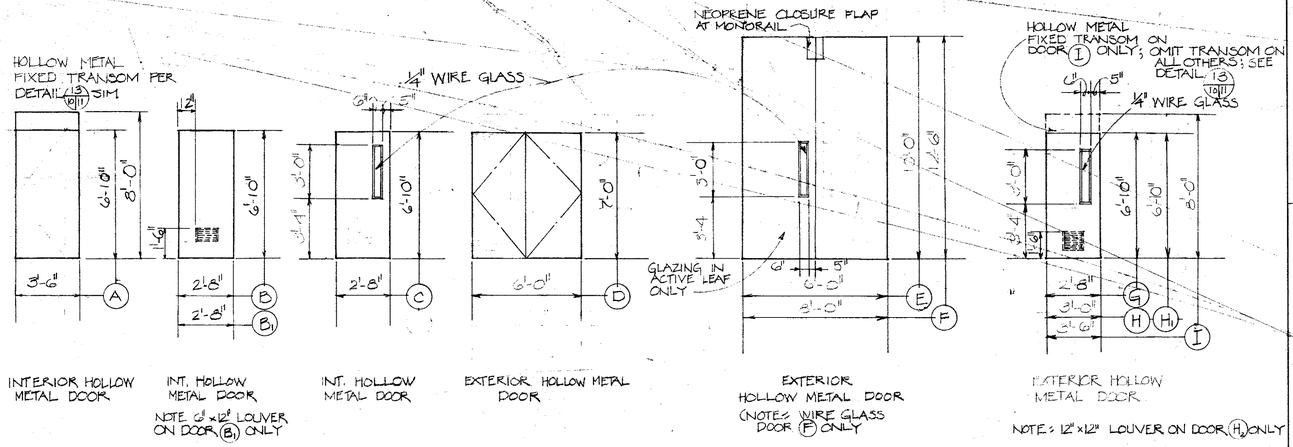

INTERIOR HOLLOW METAL DOOR

INT. HOLLOW METAL DOOR
NOTE: 6" x 12" LOUVER ON DOOR (B1) ONLY

INT. HOLLOW METAL DOOR

EXTERIOR HOLLOW METAL DOOR

EXTERIOR HOLLOW METAL DOOR
(NOTE: WIRE GLASS DOOR (F) ONLY

EXTERIOR HOLLOW METAL DOOR

NOTE: 12" x 12" LOUVER ON DOOR (H) ONLY

LOUVER SCHEDULE

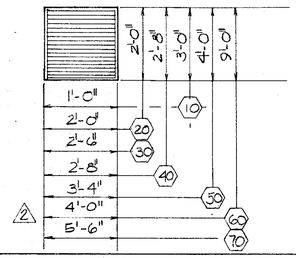

WINDOW SCHEDULE

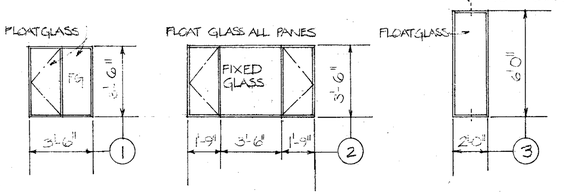

PROVIDE SAFETY GLASS WHERE INDICATED ON DWGS.

REFLECTED CEILING PLAN LEGEND

⊘	FUME HOOD DUCT
	1×4 SURFACE MOUNTED FLUORECENT FIXTURE
⊠	CEILING GRILLE - SUPPLY AIR
⊠	CEILING GRILLE - RETURN AIR
⊡	CEILING GRILL
⊠	DUCT TO EXAUST
⊠	CEILING TRANSFER VENT

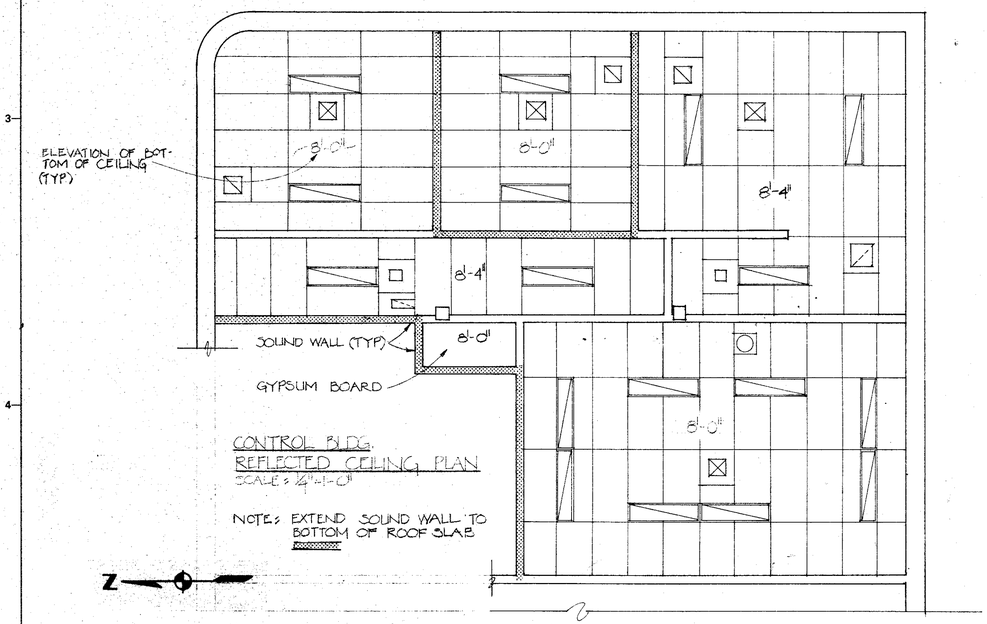

CONTROL BLDG.
REFLECTED CEILING PLAN
SCALE: 1/4"=1'-0"

NOTE: EXTEND SOUND WALL TO BOTTOM OF ROOF SLAB.

EXTERIOR FINISH SCHEDULE

SURFACE MATERIAL	SUBSTATE FINISH/PREPARATION SEE SPEC. SECTION REFERENCED	PAINTED FINISH SEE SPEC. SECTION REFERENCED
SMOOTH CONCRETE	CLASS 2 SEE 03300 - 3.10E	ACRYLIC LATEX SEE 09900 - 2.01B 2a
TEXTURED CONCRETE	CLASS 1 SEE 03300 - 3.10E	DO
EXISTING CONCRETE	REMOVE ALL EXISTING PAINT & SANDBLAST W/ FINE SAND	DO
TEXTURED MASONRY	CLEAN SURFACE & REMOVE LOOSE MAT'L BY HIGH-PRESSURE WATER BLASTING OR SAND-BLASTING W/ FINE SAND.	WATER-PROOF COATING FOR CONCRETE BLOCK SEE 09900 - 2.01 B 2a
EXTERIOR METAL	PRE-TREATED GALVANIZED METAL WITH PHOSPHORIC METAL ETCH GALVA-PRIME, GALVA-PREP OR EQUAL	HEAVY DUTY ENAMEL SEE SPEC SECTION 09900-2.01, B1.
INSULATED METAL PANEL	PORCELAIN ENAMELED PANELS	PRE-FINISHED: SEE SPEC SECTION 08100 - 2.01E

Record Drawing
These record drawings have been prepared, in part, on the basis of information compiled and furnished by others. Kennedy/Jenks/Chilton is not responsible for any errors or omissions in this document as a result of information provided by others.
Dated ____ 19__

RECORD DRAWING

Revised	Description	Submit.	Appr'd.	Date
⚠2	C.O. NO. 50			
⚠1	FIELD REPAIRS			

Refer to Tracing for Latest Revision

Reference Information and Notes:

Record Drawing
These record drawings have been prepared, in part, on the basis of information compiled and furnished by others. Kennedy/Jenks/Chilton is not responsible for any errors or omissions in this document as a result of information provided by others.
Rated ____ APR. 23 19 82

GRAPHIC SCALE
1/4" = 1'-0"
0 5 10'

Designed JWC
Drawn JAC
Checked JWC
Date 1/29/81

Kennedy/Jenks Engineers — San Francisco
Submitted: Walter F. Hansman 6-9-82
Approved: Robert J. Owen

SCHEDULES

Scale AS NOTED
Job No. 0112
Sheet A-10 of

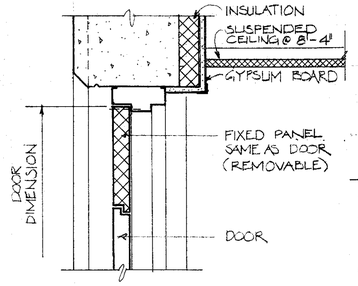

FIXED TRANSOM (13 2|11)
SCALE: 1½"=1'-0"

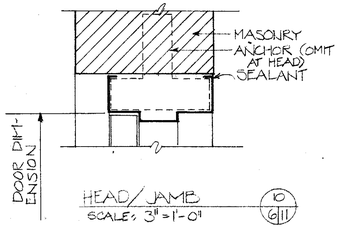

HEAD/JAMB (10 6|11)
SCALE: 3"=1'-0"

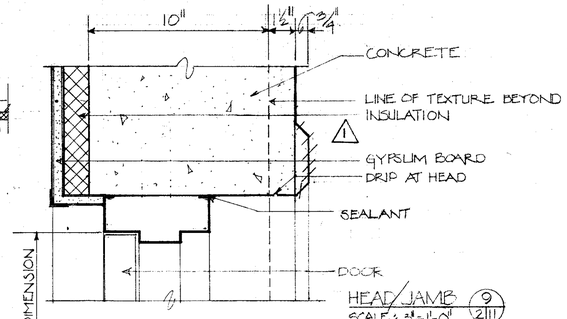

HEAD/JAMB (9 2|11)
SCALE: 3"=1'-0"

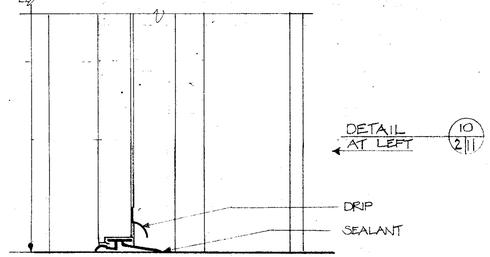

DETAIL AT LEFT (10 2|11)

SILL (11 2|11)
SCALE: 3"=1'-0"

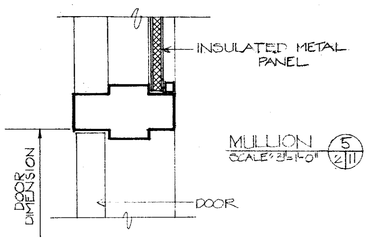

MULLION (5 2|11)
SCALE: 3"=1'-0"

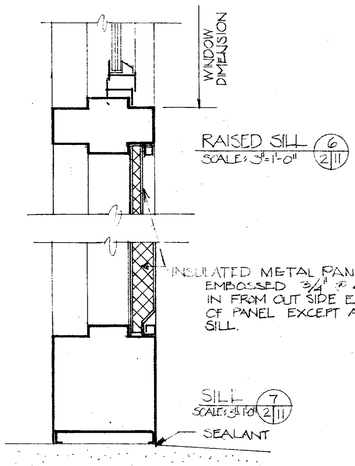

RAISED SILL (6 2|11)
SCALE: 3"=1'-0"

SILL (7 2|11)
SCALE: 3"=1'-0"

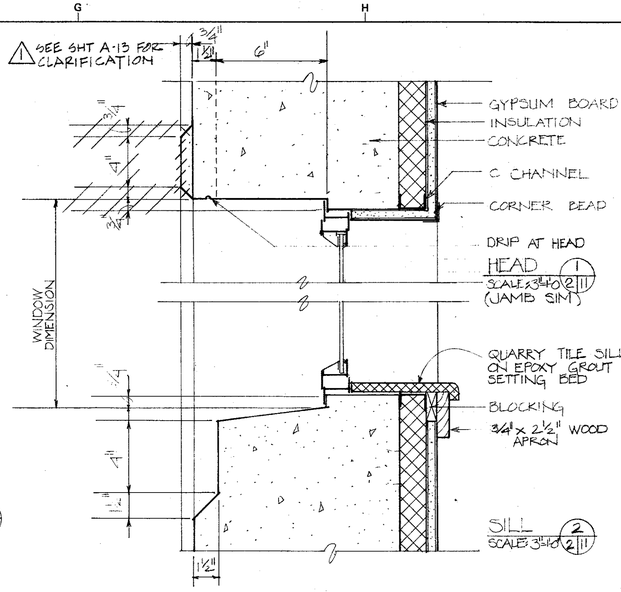

CASEMENT WINDOW DETAIL

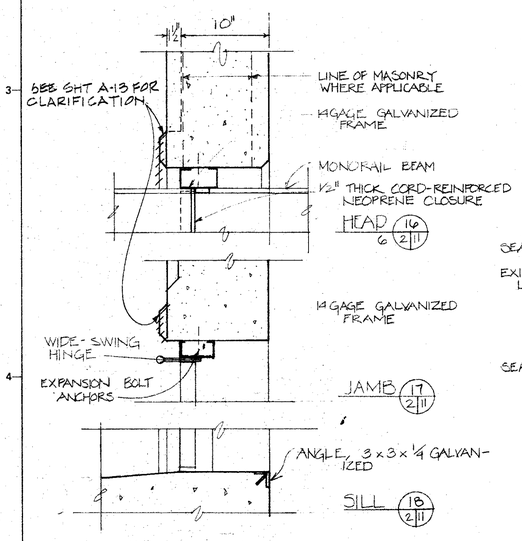

MONORAIL OPENING
SCALE: 1½" = 1'-0"

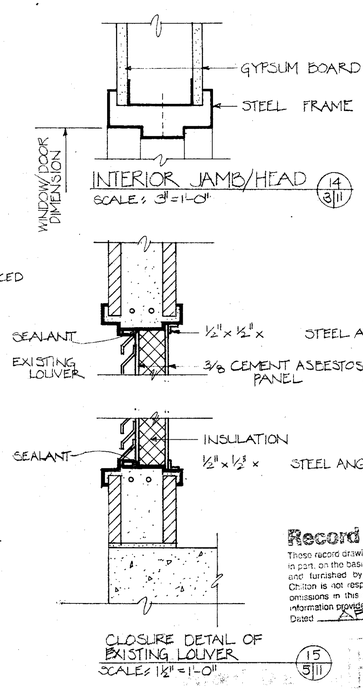

INTERIOR JAMB/HEAD (14 3|11)
SCALE: 3"=1'-0"

CLOSURE DETAIL OF EXISTING LOUVER (15 5|11)
SCALE: 1½"=1'-0"

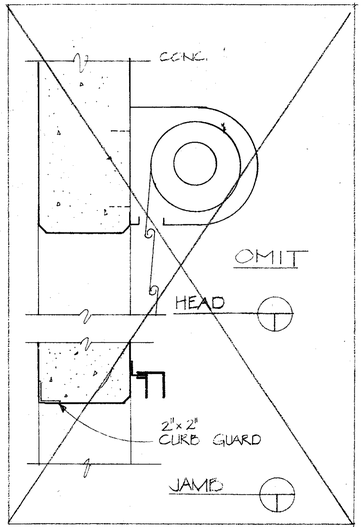

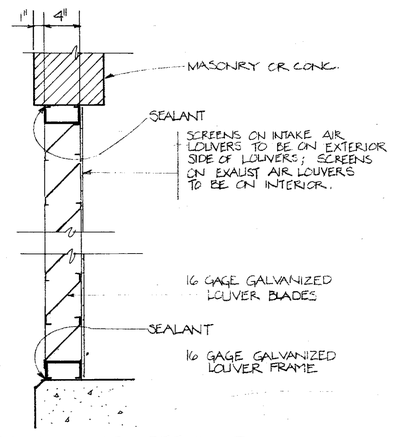

WALL LOUVER DETAIL (8 7|11)
SCALE: 1½"=1'-0"

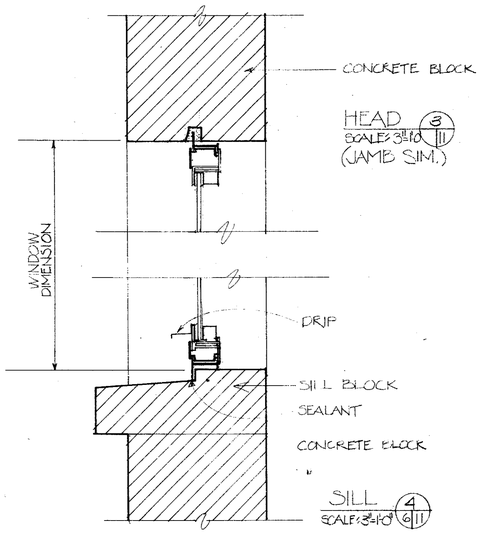

PIVOT WINDOW DETAIL
SCALE: 3"=1'-0"

Record Drawing
These record drawings have been prepared, in part, on the basis of information compiled and furnished by others. Kennedy/Jenks/Chilton is not responsible for any errors or omissions in this document as a result of information provided by others.
Dated APR. 29, 19 88

Revised	Description	Submit.	Appr'd.	Date
1	CLARIFICATION			

Refer to Tracing for Latest Revision

Reference Information and Notes:

GRAPHIC SCALE
1½" = 1'-0" (0, 1, 2)
3" = 1'-0" (0", 3", 6", 9", 12")

Designed: J W C
Drawn: J A C
Checked: J W C
Date: 1-29-81

Wastewater Plant Improvements C-06-2464
Sausalito - Marin City Sanitary District
Kennedy/Jenks Engineers — San Francisco
Submitted: Walter J. Kennedy 6/30/81
Approved: Robert J. Owen

DETAILS

Scale: AS SHOWN
Job No.: 0112
Sheet: A-11 of

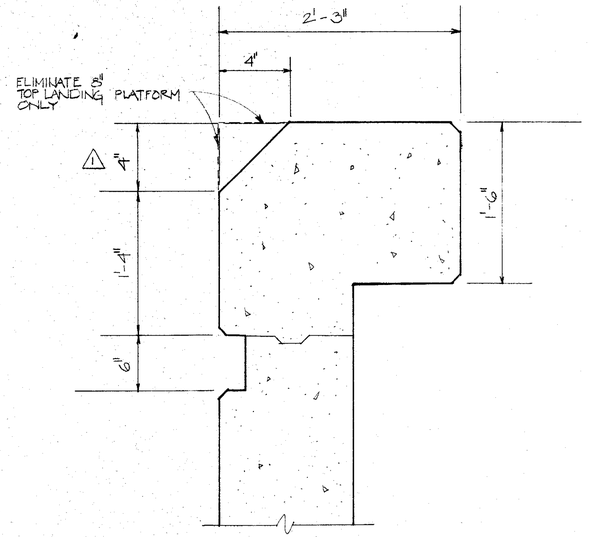

F.F.R. CAP (12 / 9|12)

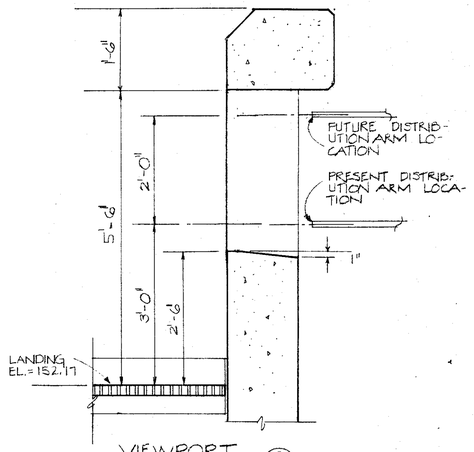

VIEWPORT
SCALE: 3/4"=1'-0" (9 / 8|12)

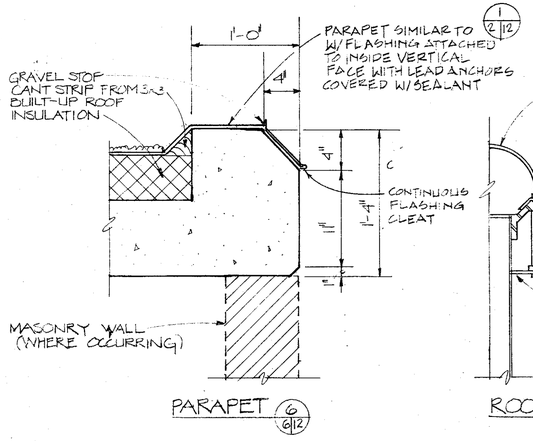

PARAPET (6 / 6|12)

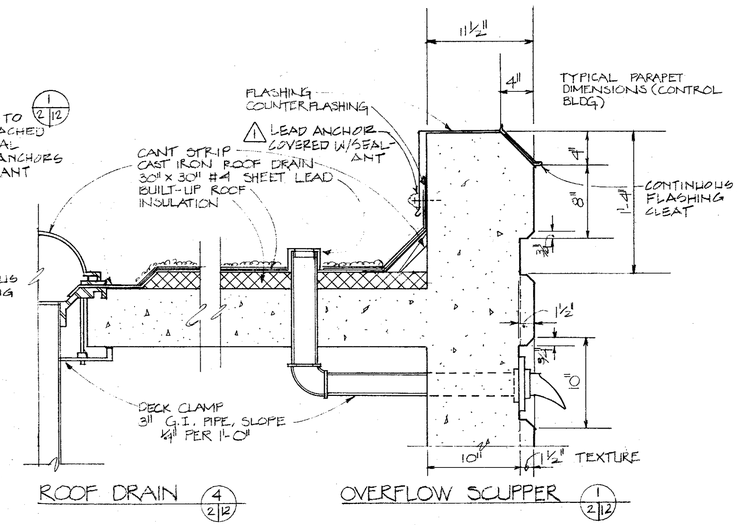

ROOF DRAIN (4 / 2|12)

OVERFLOW SCUPPER (1 / 2|12)

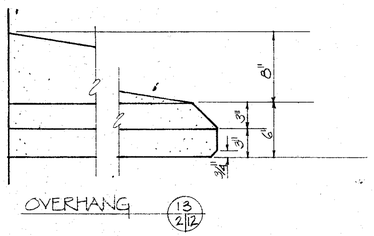

OVERHANG (13 / 2|12)

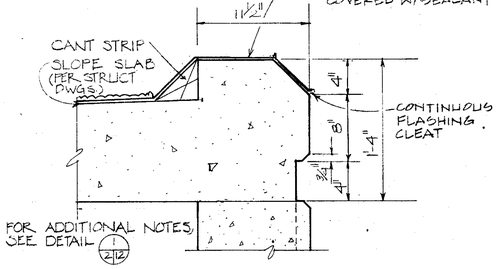

PARAPET (10 / 7|12)

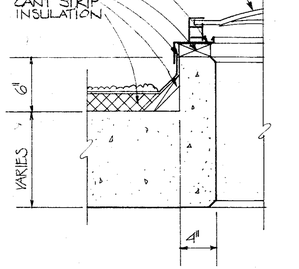

SKYLIGHT (7 / 5|12)

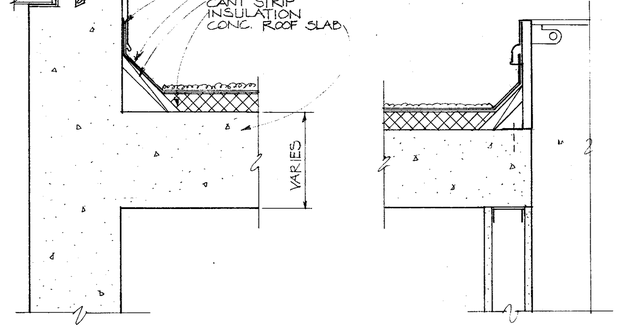

DIVERSION TANK (5 / 2|12)

ROOF HATCH (2 / 2|12)

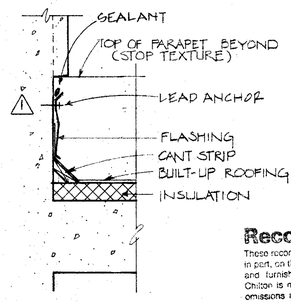

FLASHING (14 / 2|12)

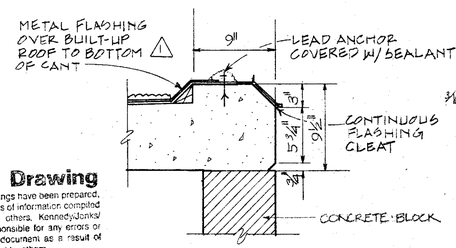

PARAPET (11 / 5|12)

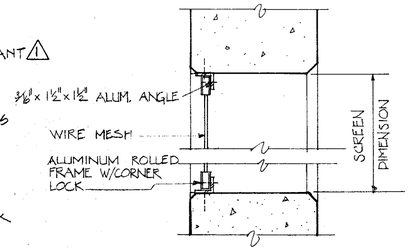

WIRE SCREEN (8 / 2|12)

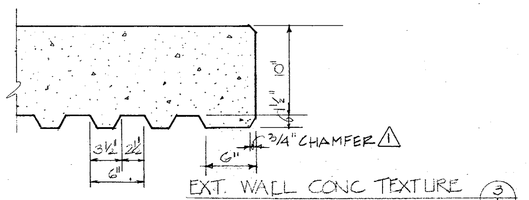

NOTE: SEE SHT. A-13 FOR ADDITIONAL DETAILS

Record Drawing

These record drawings have been prepared, in part, on the basis of information compiled and furnished by others. Kennedy/Jenks/Chilton is not responsible for any errors or omissions in this document as a result of information provided by others.

Dated APR. 29, 19 88.

Record Drawing

1 FIELD CHANGE

Revised	Description	Submit.	Appr'd.	Date

Refer to Tracing for Latest Revision

Reference Information and Notes:

GRAPHIC SCALE

3/4" = 1'-0"

1/2" = 1'-0"

0 1 2 3 4

0 1 2

Designed	JWC
Drawn	JAC
Checked	JWC
Date	1-29-81

Wastewater Plant Improvements C-06-2464
Sausalito - Marin City Sanitary District

Kennedy/Jenks Engineers San Francisco

Submitted: Walter J. Kassina

Approved: Edward J. Ahern

DETAILS

Scale	AS SHOWN
Job No.	0112
Sheet	A-12
of	

57

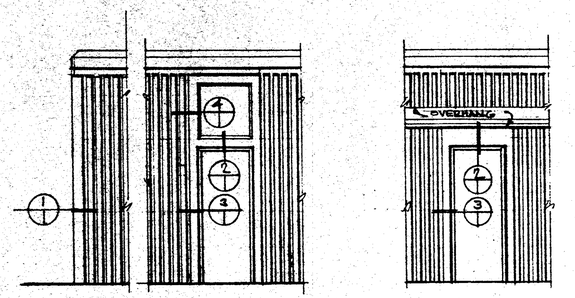

TYP. CORNER DOORS WEST WALL — DOORS IN NORTH & EAST WALLS

EXTERIOR ELEVATIONS 1/4"=1-0"

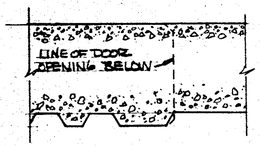

3 TRANSOM DETAIL 4

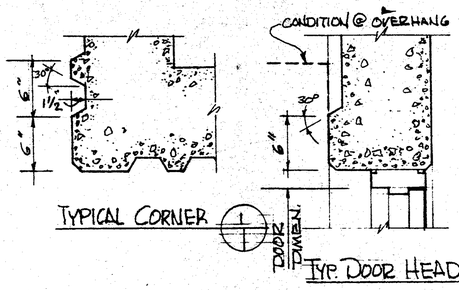

TYPICAL CORNER 1 — TYP. DOOR HEAD 2

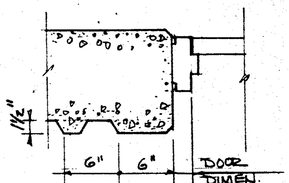

TYPICAL DOOR JAMB 3

TYPICAL CONCRETE TEXTURE DETAILS 1½"=1'-0"

3

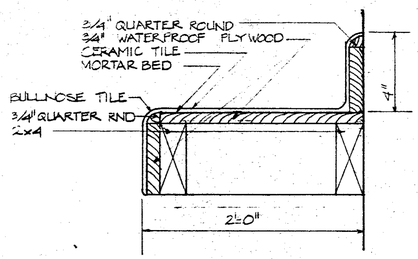

LAVATORY COUNTER 3 (3/13)
SCALE: 1½" = 3'-0"

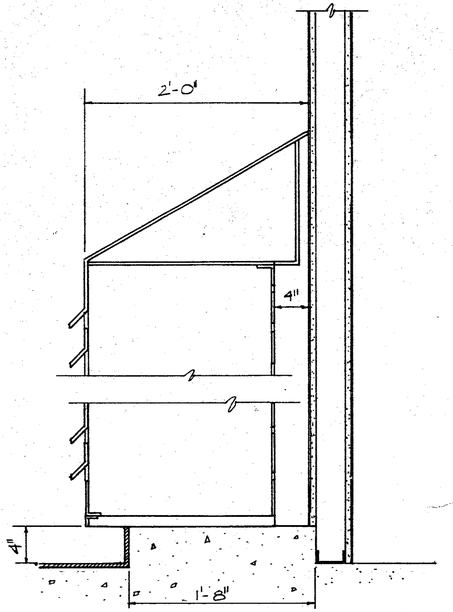

LOCKER DETAIL 1 (3/13)
SCALE: 1½" = 1'-0"

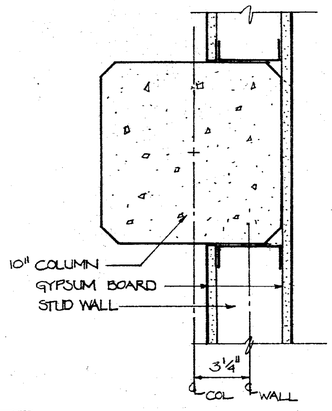

COLUMN @ WALL 4 (4/13)
SCALE: 3"=1'-0"

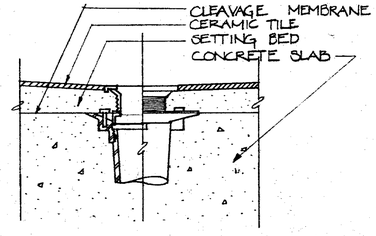

FLOOR DRAIN 2 (1/13)
SCALE: 3"=1'-0"

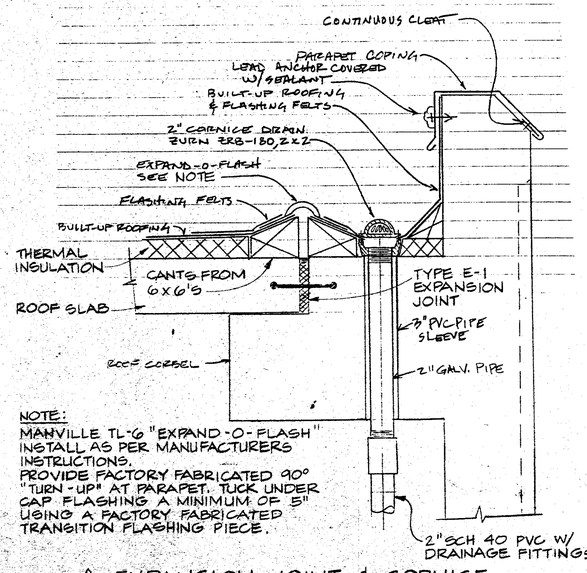

2 EXPANSION JOINT & CORNICE ROOF DRAIN DETAIL 20 (2/13)

1 'NOTE: Ceramic Tile Floor and Base shall be installed in the Toilet and Locker Rooms and the connecting corridor.

Ceramic Tile Wainscot shall be installed in Toilet and Locker Rooms as shown on Interior Elevations and in Finish Schedule. Walls in connecting corridor shall be of water resistant gypsum board.

All ceramic tile wainscots shall be installed as specified, in accordance with TCA-W231. The assembly shall be backed with water resistant gypsum board in all cases.

All ceramic tile floors shall be installed as specified in accordance with TCA-F111.

Ceramic tile in the shower stall shall be installed in accordance with TCA-B514.

Ceramic tile lavatory counter and splash shall be installed on a mortar bed backed by 3/4-inch waterproof plywood in accordance with TCA-C611."

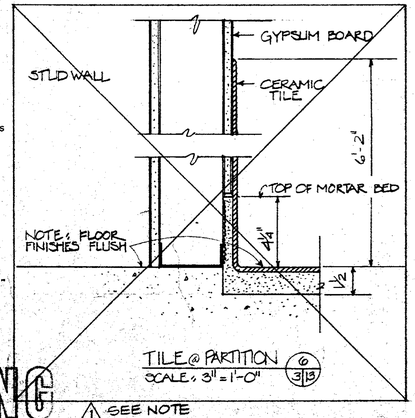

TILE @ PARTITION 6 (3/13)
SCALE: 3"=1'-0"
1 SEE NOTE

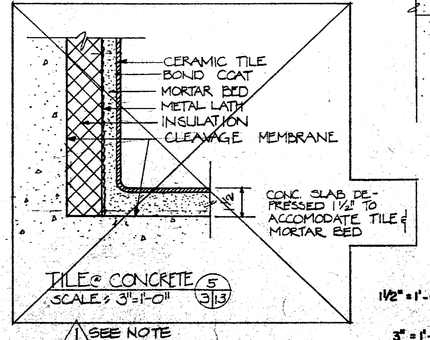

TILE @ CONCRETE 5 (3/13)
SCALE: 3"=1'-0"
1 SEE NOTE

GRAPHIC SCALE
1½" = 1'-0" 0 1 2
3" = 1'-0" 0" 3" 6" 9" 12"

RECORD DRAWING

Revised	Description	Submit.	Appr'd.	Date
3	CLARIFICATION			
2	C.O. NO. 28			
1	ADDENDUM NO.2			

Refer to Tracing for Latest Revision

Reference Information and Notes:

Record Drawing These record drawings have been prepared, in part, on the basis of information compiled and furnished by others. Kennedy/Jenks/Chilton is not responsible for any errors or omissions in this document as a result of information provided by others.
Dated APR 29, 19 82

Record Drawing These record drawings have been prepared, in part, on the basis of information compiled and furnished by others. Kennedy/Jenks/Chilton is not responsible for any errors or omissions in this document as a result of information provided by others.
Dated ____, 19__

Designed	JWC
Drawn	JAC
Checked	JWC
Date	1-29-81

Wastewater Plant Improvements C-06-2464
Sausalito-Marin City Sanitary District

Kennedy/Jenks Engineers — San Francisco

Submitted: Walter J. Kaufman

Approved: Robert J. Brown

DETAILS

Scale	AS SHOWN
Job No.	0112
Sheet	A-13
of	

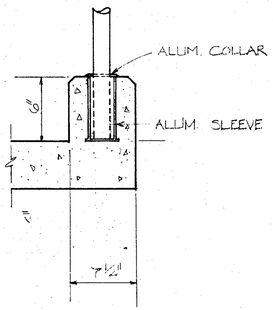

REMOVABLE RAILING (10 | 14)
SCALE: 1½" = 1'-0"

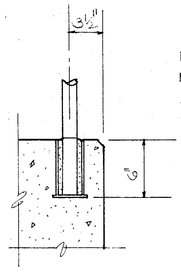

RAILING (7 | 14)
SCALE: 1½" = 1'-0"

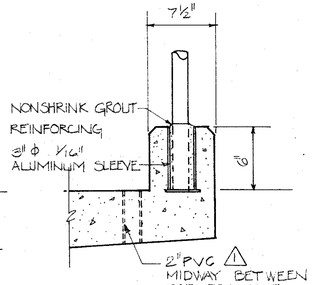

RAILING@CURB (5 | 14)
SCALE: 1½" = 1'-0"

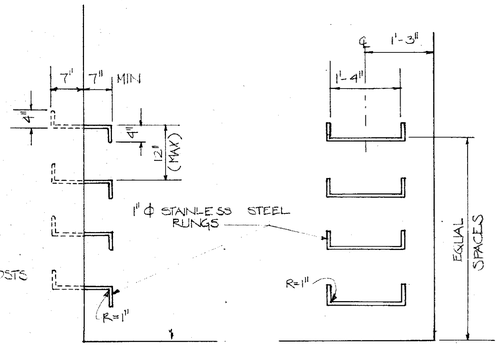

LADDER RUNG (3 | 14)
SCALE: 3/4" = 1'-0"

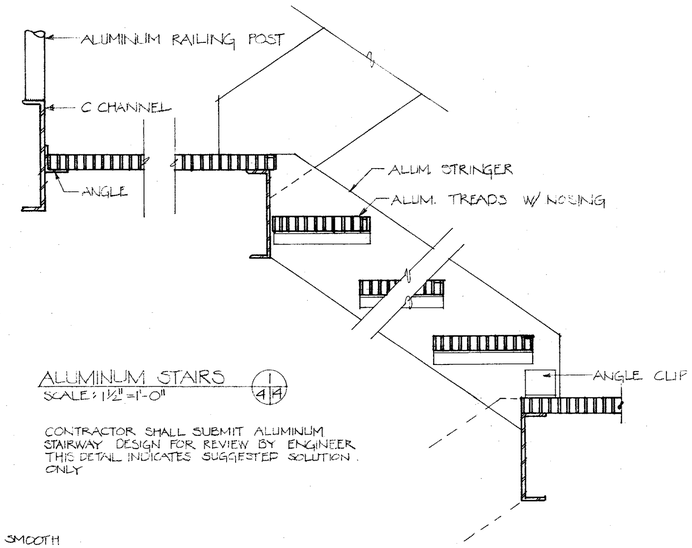

ALUMINUM STAIRS (1 | 4 | 14)
SCALE: 1½" = 1'-0"

CONTRACTOR SHALL SUBMIT ALUMINUM STAIRWAY DESIGN FOR REVIEW BY ENGINEER. THIS DETAIL INDICATES SUGGESTED SOLUTION ONLY.

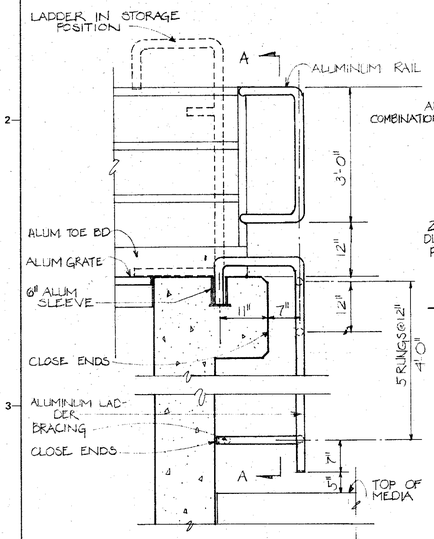

REMOVABLE LADDER (11 | 14)
SCALE: 3/4" = 1'-0"

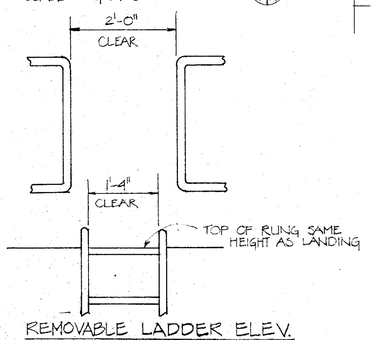

REMOVABLE LADDER ELEV.

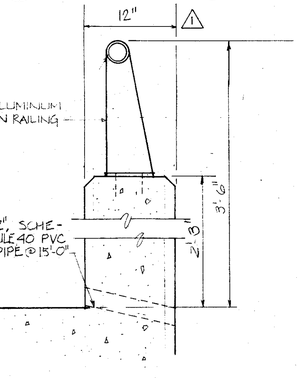

TRAFFIC RAILING (8 | 14)
SCALE: 1½" = 1'-0"

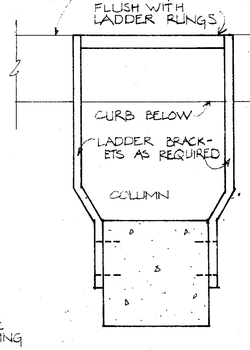

LADDER (9 | 14)

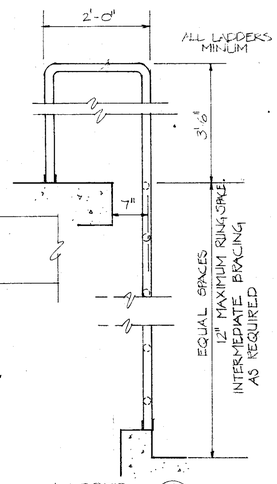

LADDER (6 | 14)
SCALE: 3/4" = 1'-0"

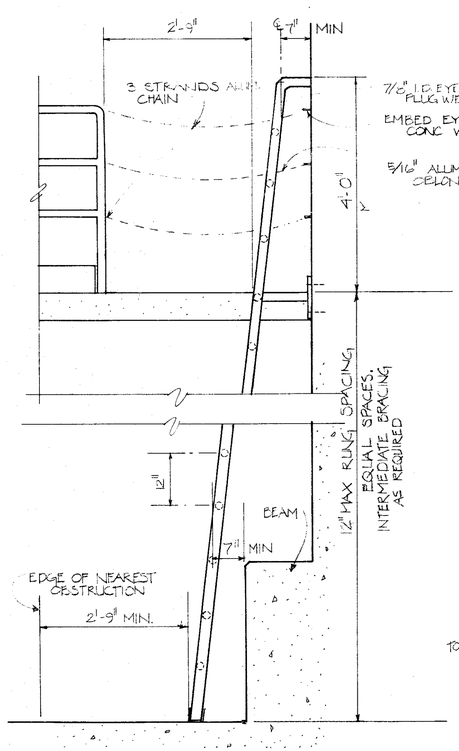

LADDER (4 | 8 | 14)
SCALE: 3/4" = 1'-0"

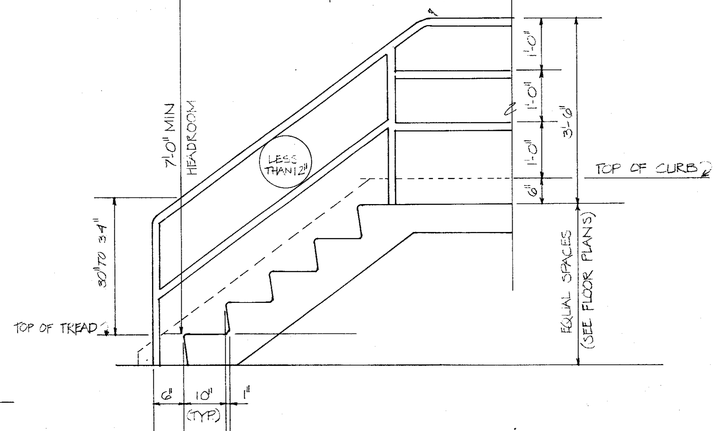

TYPICAL GUARD & STAIR RAILING DETAIL (2 | 2 | 14)
SCALE: 3/4" = 1'-0"

GRAPHIC SCALE
3/4" = 1'-0" 0 1 2 3 4
1½" = 1'-0" 0 1 2

Revised	Description	Submit.	Appr'd.	Date
1	FIELD CHANGE			

Refer to Tracing for Latest Revision

Reference Information and Notes:

Record Drawing
These record drawings have been prepared, in part, on the basis of information compiled and furnished by others. Kennedy/Jenks/Chilton is not responsible for any errors or omissions in this document as a result of information provided by others.
Dated APR. 21, 19 82

Designed JWC
Drawn JAC
Checked JWC
Date 1-29-81

Wastewater Plant Improvements C-06-2464
Sausalito-Marin City Sanitary District

Kennedy/Jenks Engineers — San Francisco

Submitted: Walter Warman — Approved: Robert J. Chan

LADDERS, STAIRS & RAILING

Scale: AS NOTED
Job No. 0112
Sheet A-14 of

Record Drawings

59

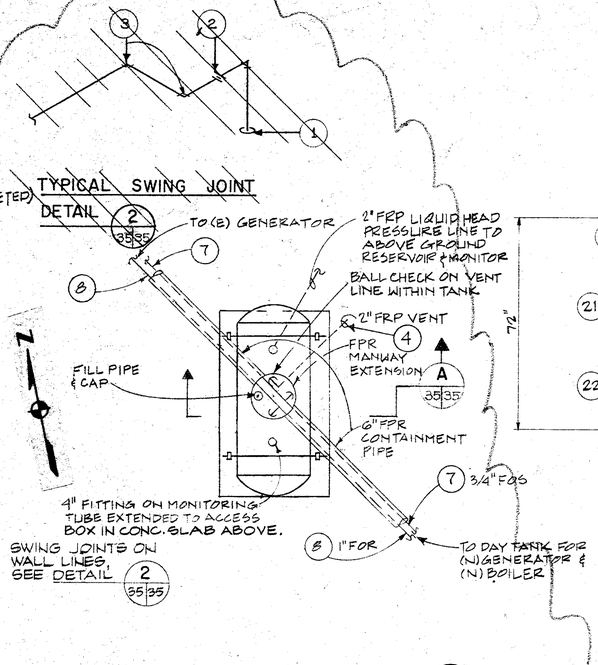

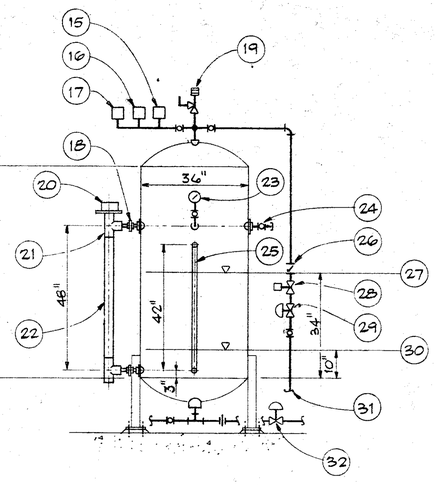

HYDROPNUEMATIC TANK DETAIL 3 35|35
SCALE: 1/2" = 1'-0"

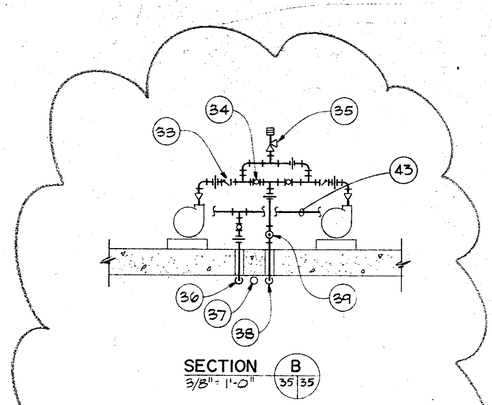

SECTION B 35|35
3/8" = 1'-0"

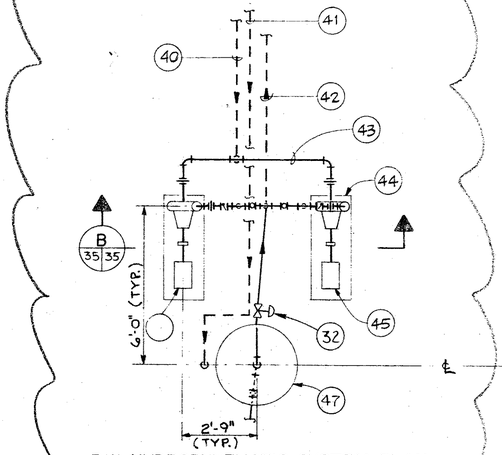

P.W. HYDROPNUEMATIC SYSTEM PLAN
SCALE: 3/8" = 1'-0"

THICKENER

MODIFIED PER 2 CO NO. 35. SEE SHEET M-36 FOR CHANGES.

1 TANK CONNECTION
2 THREADED UNION
3 THREADED 90° ELBOWS (TYP)
4 2" FRP VENT LINE (SEE M-23 FOR RISER LOCATION. RISER IS SIMILAR TO DETAIL 1/P-34)
5 DIP STICK BOX. POUR CONCRETE PERIPHERAL SLAB FOR MANHOLE VAULT W/ DIPSTICK BOX IN THE SLAB.
6 4" TX-4P TANK FILL LINE TO FILL LOCATION
7 3/4" TX-5P FUEL SUPPLY
8 1" TX-5P FUEL RETURN
9 CONCRETE PERIPHERAL SLAB.
10 FIBERGLASS STRAPS AS REQUIRED BY THE TANK MANUFACTURER.
11 INVERT ELEVATION 104.0
12 3/4" ϕ ROOKED BAR W/STAINLESS STEEL TURNBUCKLE (TYP)
13 #5 AT 12" O.C.
14 CONCRETE BASE

15 ADD AIR PS
16 LAG PUMP "ON" P.S. (42 P.S.I.)
17 LEAD PUMP "ON" P.S. (45 P.S.I.)
18 ELECTRODE PROBES
19 PRESSURE RELIEF VALVE (SET @ 75 P.S.I. 20 CFM AIR)
20 1" TY-1P W/UNION AND 3" X 1" BUSHING (TYP.)
21 3" X 3" TY-1P TEE
22 3" TY-1P PROBE HOLDER
23 PRESSURE GAGE (0-100 P.S.I.)
24 3/4" CAPPED STUB W/BALL VALVE (AIR INLET-MANUAL VENT)
25 SITE GLASS LEVEL GAGE
26 CHECK VALVE
27 PUMP OFF LEVEL
28 SOLENOID VALVE
29 PRESSURE REGULATING VALVE (SET @ 67 P.S.I., 5CFM AIR)
30 LOW LEVEL ALARM
31 1/2" AIR SUPPLY
32 FLOW REGULATING VALVE (SET @ 40 GPM MAX.)
33 2" SILENT CHECK VALVE (TYP. OF 2)
34 2" BALL VALVE (TYP. OF 2)
35 PRESSURE RELIEF VALVE (SET @ 80 P.S.I.)
36 PUMP SUCTION
37 INSTRUMENT AIR TO HYDROPNUEMATIC TANK
38 TO P.W. SYSTEM
39 TO HYDROPNUEMATIC TANK
40 2" TV-1P P.W. SUCTION
41 1/2" TV-1P INSTRUMENT AIR
42 2" TV-1P P.W. DISCHARGE
43 2" TV-1P P.W. PUMP SUCTION
44 4' L. X 1'-6"W. X 4" THICK CONC. PAD (TYP. OF 2)
45 PUMP NO. 2
46 PUMP NO. 1
47 HYDROPNEUMATIC TANK, SEE DETAIL, THIS SHEET

NOTES

1. SEE SHEET M-23 FOR TANK LOCATION
2. ~~ALL PIPE CONNECTIONS TO TANK SHALL HAVE SWING JOINTS. SEE DETAILS.~~ (DELETED)
3. SEE FIBERGLASS TANK SPEC. FOR PIPE CONNECTIONS TO TANK.
4. EXCAVATION FOR TANK MUST BE A MIN. OF 3'-2" FROM ENDS & SIDE OF TANK TO EXCAVATION
5. BACKFILL ENTIRE TANK EXCAVATION WITH NATURALLY ROUNDED AGGREGATE CLEAN AND FREE FLOWING, WITH PARTICLE SIZE NOT LESS THAN 1/8" OR MORE 3/4" IN DIAMETER.
6. PROVIDE 3/4" ϕ FUEL OIL SUPPLY AND 1" ϕ FUEL OIL RETURN PIPING FROM TANK ASSEMBLY TO ENGINE.

Record Drawing
This drawing is a record of construction as prepared by the Contractor and is not to be used for construction purposes. Changes, corrections, omissions, deletions or additions may have been made as a result of information received during construction.
Date Apr. 29 88

Record Drawing
Kennedy/Jenks Engineers
REVISED PER CHANGE ORDER NO. 5

Revised	Description	Submit.	Appr'd.	Date
2	CO NO. 35			
1	CO NO. 4			

Refer to Tracing for Latest Revision

Reference Information and Notes:

REFER TO THE NOTE WITH THIS NUMBER

Designed EB
Drawn JD CB/NL
Checked JHF
Date 1-29-81

Wastewater Plant Improvements C-06-2464
Sausalito-Marin City Sanitary District
Kennedy/Jenks Engineers San Francisco
Submitted: C 9370 Approved:

FUEL OIL TANK AND P.W. HYDROPNUEMATIC SYSTEM

Scale NONE
Job No. 0112
Sheet M-35 of

44

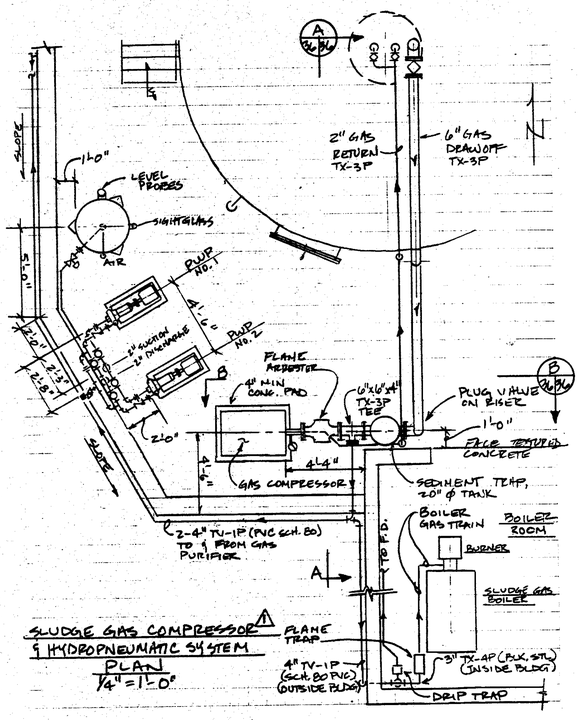

SLUDGE GAS COMPRESSOR & HYDROPNEUMATIC SYSTEM
PLAN
1/4" = 1'-0"

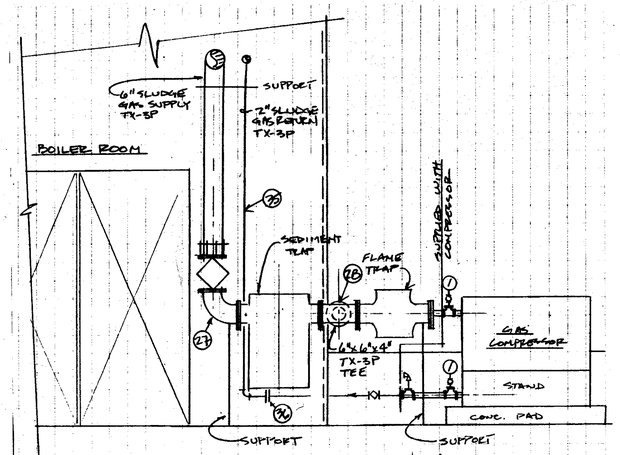

SLUDGE GAS COMPRESSOR
SECTION
1/2" = 1'-0"

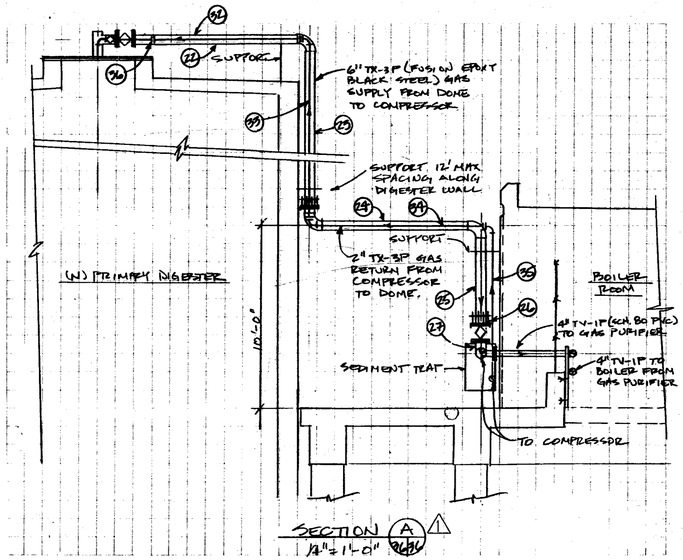

SECTION
1/4" = 1'-0"

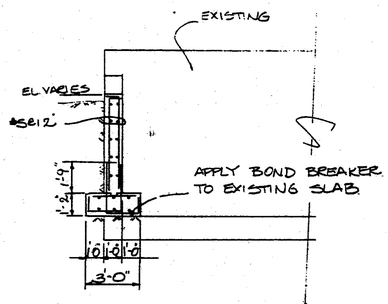

SECTION
1/4" = 1'-0"

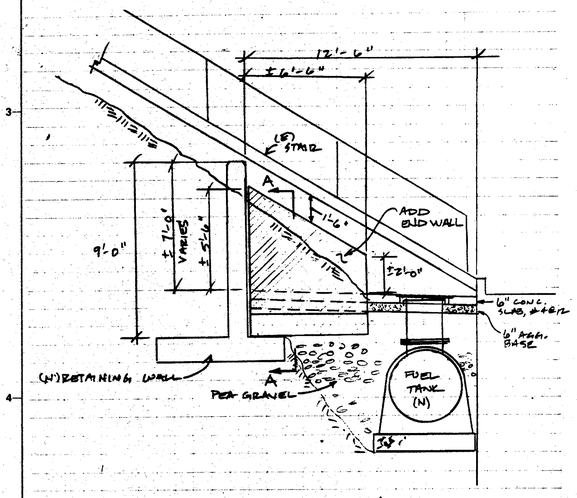

SECTION
(APPROX) 1/4" = 1'-0"

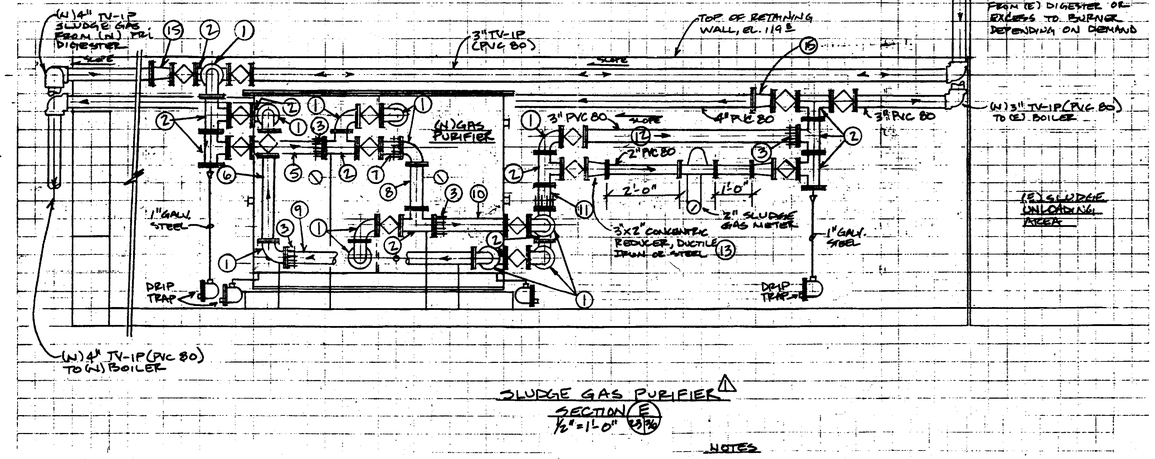

SLUDGE GAS PURIFIER
SECTION
1/2" = 1'-0"

NOTES

1. INTERCONNECTING PIPING ON PURIFIER AND TRANSPORT GAS LINES SHALL BE TV-1P (SCH. 80 PVC).
2. FLANGE X FLANGE FITTINGS ON PURIFIER SHALL BE TX-7P (DUCTILE IRON) EXCEPT FITTINGS SHALL BE UNLINED.
3. PROVIDE SUPPORTS WERE SHOWN & AS REQUIRED TO SUPPORT PIPING & VALVES.

G-10 (5/80)

RFQ #22-WATERWORKS TAKE-OFF FOR SLUDGE GAS SYSTEM MODIFICATIONS

ITEM	QUAN	SIZE	DESCRIPTION	MATERIAL
1	16	3"	90 DEGREE ELBOW-FL X FL	CAST IRON
2	10	3"	TEE-FL X FL X FL	CAST IRON
3	5	3"	FCA-SUIT D.I.PIPE O.D.	MANF STND COATING
4	2	3"	FCA-SUIT STEEL PIPE O.D.	MANF STND COATING
5	1	3"	1'-11" FL X PE SPOOL	DUCTILE IRON
6	1	3"	2'-4 5/8" FL X FL SPOOL	DUCTILE IRON
7	1	3"	0'-6 7/8" FL X FL SPOOL	DUCTILE IRON
8	1	3"	1'-2 1/2" FL X FL SPOOL	DUCTILE IRON
9	1	3"	5'-2 1/4" FL X PE SPOOL	DUCTILE IRON
10	1	3"	1'-11" FL X PE SPOOL	DUCTILE IRON
11	1	3"	0'-6" FL X PE SPOOL	DUCTILE IRON
12	1	3"	5'-7 5/8" FL X PE SPOOL	DUCTILE IRON
13	2		3" X 2" FL X FL CONC RED	CAST IRON
14	4	2"	COMPANION FLANGE	CAST IRON
15	2		4" X 3" FL X FL CONC RED	CAST IRON
16	57	3"	1/8" FULL FACED GASKETS	BLACK NEOPRENE
17	244		5/8" X 2 1/2" BOLTS	ELECTROPLATED
18	244		5/8" NUTS	ELECTROPLATED
19	2	4"	1/8" FULL FACED GASKETS	BLACK NEOPRENE
20	6	3"	COMPANION FLANGE	CAST IRON
21	6	3"	1/8" FULL FACED GASKETS	BLACK NEOPRENE
22	1	6"	FL X FL STEEL PIPE SPOOL	F.E.C. &L.
23	1	6"	FL X FL STEEL PIPE SPOOL	F.E.C. &L.
24	1	6"	FL X FL STEEL PIPE SPOOL	F.E.C. &L.
25	1	6"	FL X PE STEEL PIPE SPOOL	F.E.C. &L.
26	1	6"	FCA TO SUIT STEEL PIPE O.D.	MANF STND COATING
27	1	6"	FL X FL STEEL 90 DEGREE ELBOW	F.E.C. &L.
28	1		6" X 6" X 4" FL X FL TEE	F.E.C. &L.
29	11	6"	1/8" FULL FACED GASKETS	BLACK NEOPRENE
30	88		3/4" X 3 1/4" BOLTS	ELECTROPLATED
31	88		3/4" NUTS	ELECTROPLATED
32	1	2"	FL X FL STEEL PIPE SPOOL	F.E.C. & L
33	1	2"	FL X FL STEEL PIPE SPOOL	F.E.C. & L.
34	1	2"	FL X FL STEEL PIPE SPOOL	F.E.C. & L.
35	1	2"	FL X FL STEEL PIPE SPOOL	F.E.C. & L.
36	2	2"	COMPANION FLANGE	CAST IRON
37	5	2"	1/8" FULL FACED GASKET	BLACK NEOPRENE
38	20		5/8" X 2 1/4" BOLTS	ELECTROPLATED
39	20		5/8" NUTS	ELECTROPLATED

Record Drawing
These record drawings have been prepared, in part, on the basis of information compiled and furnished by others. Kennedy/Jenks/Chilton is not responsible for any errors or omissions in this document as a result of information provided by others.
Dated APR. 89, 19 88

RECORD DRAWING

Revised	Description	Submit.	Appr'd.	Date
1	CO NO. 35			

Refer to Tracing for Latest Revision

Reference Information and Notes:

Record Drawing
These record drawings have been prepared, in part, on the basis of information compiled and furnished by others. Kennedy/Jenks/Chilton is not responsible for any errors or omissions in this document as a result of information provided by others.
Dated _____, 19 ____

Designed	JAF
Drawn	JAF
Checked	JAF
Date	2/11/88

Wastewater Plant Improvements C-06-2464
Sausalito - Marin City Sanitary District

Kennedy/Jenks Engineers San Francisco

Submitted: Approved:

SLUDGE GAS PLANS, SECTIONS & SCHEMATICS

Scale: AS SHOWN
Job No.: 0112
Sheet: M-36 of

GENERAL STRUCTURAL NOTES

ALL NOTES AND TYPICAL STRUCTURAL DETAILS SHOWN ON THIS SHEET APPLY EXCEPT WHERE OTHERWISE SHOWN OR NOTED ON CONTRACT DOCUMENTS.

DESIGN AND CONSTRUCTION SHALL CONFORM TO THE LATEST "UNIFORM BUILDING CODE."

ALL DRAWINGS FOR THIS CONTRACT SHALL BE COORDINATED WITH FAVORABLY REVIEWED EQUIPMENT MANUFACTURER'S DRAWINGS.

*DIMENSIONS NOTED THUS TO BE DETERMINED BY EQUIPMENT MANUFACTURER.

ALL DIMENSIONS OF EXISTING STRUCTURE SHALL BE VERIFIED IN FIELD.

CONCRETE

ALL CONCRETE SHALL DEVELOP A MINIMUM COMPRESSIVE STRENGTH OF 3000 P.S.I. AT THE AGE OF 28 DAYS.

ALL REINFORCING BARS SHALL BE ASTM A615-GRADE 60.

ARRANGEMENT AND DETAILS OF REINFORCING STEEL, INCLUDING BAR SUPPORTS AND SPACERS, SHALL BE IN ACCORDANCE WITH THE LATEST ACI 315 DETAILING MANUAL.

ALL SLAB AND BEAM REINFORCING SHALL HAVE A MINIMUM EXTENSION INTO THE SUPPORT IN ACCORDANCE WITH THE LATEST BUILDING CODE. IF SUCH EXTENSION IS NOT POSSIBLE, BARS SHALL TERMINATE IN STANDARD HOOKS.

ALL REINFORCING SHALL LAP A MINIMUM OF 1.7 ℓ_d AT SPLICES UNLESS OTHERWISE SHOWN.

WHEREVER IT IS NECESSARY TO SPLICE REINFORCEMENT OTHERWISE THAN AS SHOWN ON THE CONTRACT DRAWINGS, THE CHARACTER OF THE SPLICE SHALL BE AS SPECIFIED BY THE ENGINEER. SPLICING SHALL NOT BE MADE AT POINTS OF MAXIMUM STRESS. BAR SPLICES SHALL BE STAGGERED.

HOOK BARS AT OPENINGS.

HORIZONTAL AND VERTICAL CONSTRUCTION JOINTS SHOWN ON THE CONTRACT DRAWINGS ARE RECOMMENDED. LOCATION OF ALL CONSTRUCTION JOINTS SHALL BE SUBMITTED TO THE ENGINEER FOR FAVORABLE REVIEW PRIOR TO START OF WORK ON FORMS, REINFORCING STEEL OR CONCRETE PLACEMENT. ANY ADDITIONAL JOINTS OR DEVIATION FROM THOSE SHOWN SHALL HAVE A STANDARD KEYWAY AND SHALL BE FAVORABLY REVIEWED BY THE ENGINEER. REFER TO SPECIFICATIONS AND TYPICAL DETAIL FOR ADDITIONAL INFORMATION. REINFORCING SHALL EXTEND THROUGH THESE JOINTS IF REQUIRED FOR CONTINUITY.

ALL EXPOSED EDGES AND CORNERS OF CONCRETE SHALL BE CHAMFERED 3/4-INCHES UNLESS OTHERWISE NOTED.

REFER TO PERTINENT CONTRACT DRAWINGS, EQUIPMENT MANUFACTURER'S DRAWINGS AND SPECIFICATIONS FOR ALL SLEEVES, PIPES, CONDUITS AND MISCELLANEOUS ANCHORING DEVICES TO BE INCORPORATED IN THE CONSTRUCTION.

UNLESS OTHERWISE SHOWN, THE MINIMUM COVER FOR REINFORCING STEEL SHALL BE AS FOLLOWS:

SLABS:
- BOTTOM AND SIDE CAST AGAINST FILL OR SOIL.....3"
- FORMED SIDE AND TOP EXPOSED TO FILL OR SOIL.....2-1/2"
- TOP AND BOTTOM EXPOSED TO INTERIOR TANK ATMOSPHERE.....2"
- TOP AND BOTTOM ALL OTHER EXPOSURES
  - 12 INCHES OR OVER IN THICKNESS.....2"
  - LESS THAN 12 INCHES THICK.....1"

WALLS:
- 12 INCHES OR OVER IN THICKNESS.....2-1/2"
- LESS THAN 12 INCHES THICK.....1-1/2"

BEAMS:
- TOP, BOTTOM OR SIDE OF LONGITUDINAL REINFORCEMENT.....2-1/2"
- TOP, BOTTOM OR SIDE OF STIRRUPS OR TIES.....2"

COLUMNS:
- SPIRAL.....2"
- TIES.....1-1/2"

STRUCTURAL STEEL

FIELD CONNECTIONS SHALL BE FASTENED WITH 3/4-INCH DIAMETER ASTM A325 FRICTION TYPE BOLTS UNLESS NOTED OTHERWISE. ALL WELDED CONNECTIONS SHALL BE MADE WITH AWS A5.1 OR A5.5 E 70 XX ELECTRODES.

ALL WELDING SHALL CONFORM TO THE LASTEST "CODE FOR WELDING IN BUILDING CONSTRUCTION" OF THE AMERICAN WELDING SOCIETY.

BEAM CONNECTIONS NOT DETAILED ON THE CONTRACT DRAWINGS SHALL BE SELECTED TO SUPPORT ONE-HALF THE TOTAL UNIFORM LOAD CAPACITY OF THE BEAM AS TABULATED IN "ALLOWABLE LOADS ON BEAMS" IN THE "MANUAL OF STEEL CONSTRUCTION" OF THE AISC.

EXPECTED SAN FRANCISCO BAY MAXIMUM TIDE EL. 106.0

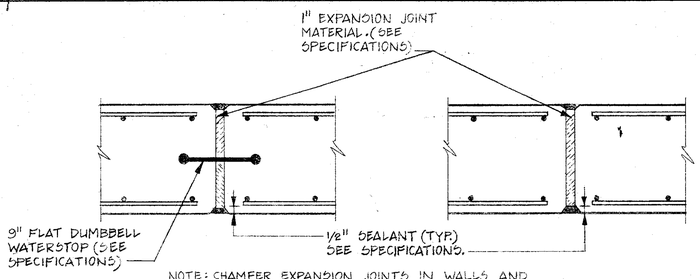

NOTE: CHAMFER EXPANSION JOINTS IN WALLS AND CEILINGS. FOR FLOOR JOINTS USE EDGER INSTEAD OF CHAMFERING. STOP REINFORCING STEEL 2" FROM EACH SIDE OF JOINT.

TYPE E1

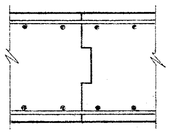

NOTE: REINFORCING STEEL IS CONTINUOUS THROUGH CONSTRUCTION JOINTS.

TYPE E2

EXPANSION JOINTS

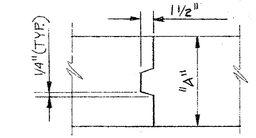

"A"	NOMINAL KEY SIZE
UP TO 8"	1 — 2" x 3" KEY
9" TO 12"	1 — 2" x 4" KEY
13" TO 18"	1 — 2" x 6" KEY

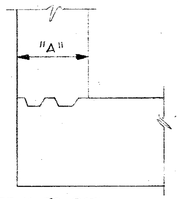

NOTE: NUMBER AND SIZE OF KEYS SHOWN APPLY TO BOTH VERTICAL AND HORIZONTAL JOINTS IN WALLS, EXCEPT AS OTHERWISE NOTED ON DRAWINGS.

LONGITUDINAL KEYS

CONSTRUCTION JOINTS

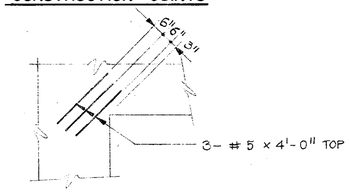

SLAB DETAIL AT RE-ENTRANT CORNER

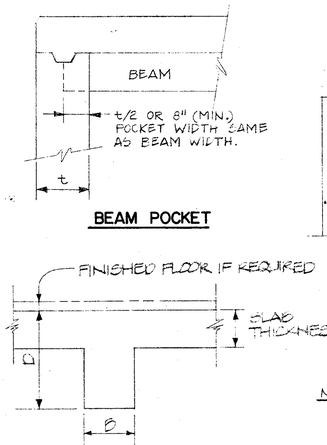

NOTE: SEE SCHEDULES FOR DIMENSIONS B, D AND SLAB THICKNESS

BEAM SECTION

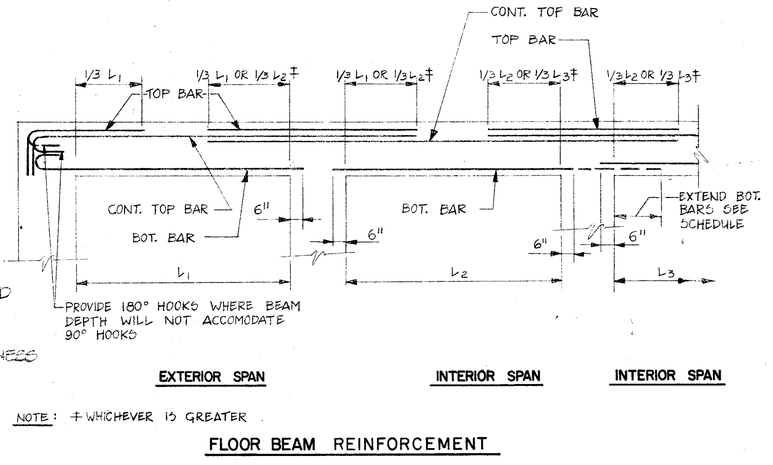

BEAM POCKET

EXTERIOR SPAN — INTERIOR SPAN — INTERIOR SPAN

NOTE: ‡ WHICHEVER IS GREATER

FLOOR BEAM REINFORCEMENT

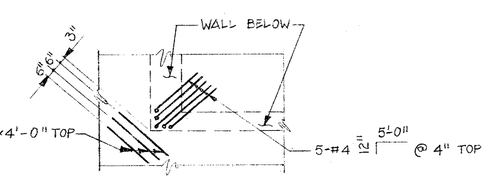

ADDITIONAL REINFORCING AT SLAB CORNERS

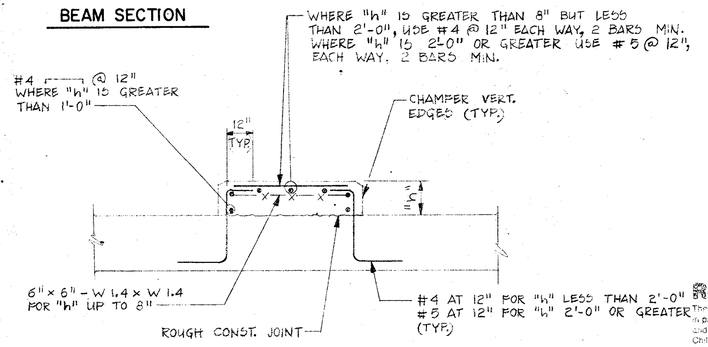

NOTE: FOR SIZE AND LOCATION OF EQUIPMENT PADS SEE MECH., VENT., AND ELECT. DWGS.

EQUIPMENT PAD

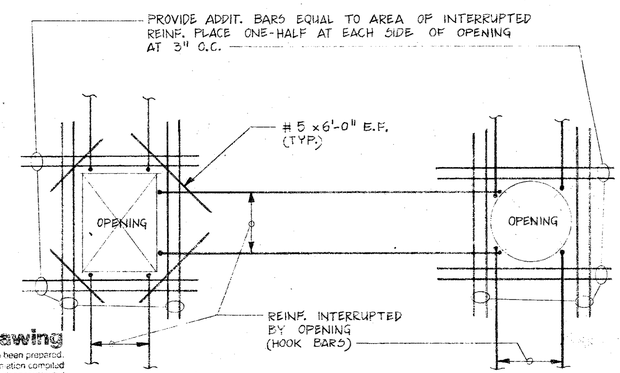

NOTE: VERTICAL ADDITIONAL REINFORCING SHALL EXTEND FULL POUR HEIGHT. HORIZONTAL ADDITIONAL REINFORCING SHALL EXTEND 5'-0" MIN. BEYOND SIDE OF OPNG. (HOOK IF 5'-0" NOT AVAILABLE)

ADDITIONAL REINFORCING STEEL AT OPENINGS & RECESSES IN PRESSURE WALLS AND SLABS

Record Drawing
These record drawings have been prepared, in part, on the basis of information compiled and furnished by others. Kennedy/Jenks/Chilton is not responsible for any errors or omissions in this document as a result of information provided by others.
Dated APR. 29 19 83

Revised	Description	Submit.	Appr'd.	Date
Refer to Tracing for Latest Revision				

Reference Information and Notes:

Record Drawing
These record drawings have been prepared, in part, on the basis of information compiled and furnished by others. Kennedy/Jenks/Chilton is not responsible for any errors or omissions in this document as a result of information provided by others.
Dated APR. 29 19 83

Designed: SH.D.
Drawn: I.H.
Checked: SH.D
Date: 1-29-81

Wastewater Plant Improvements C-06-2464
Sausalito - Marin City Sanitary District

Kennedy/Jenks Engineers — San Francisco

Submitted: Walter E. Sharman C9370 Approved: Robert J. Owen

GENERAL STRUCTURAL NOTES AND TYPICAL STRUCTURAL DETAILS

Scale: NONE
Job No.: 0112
Sheet: S-1 of

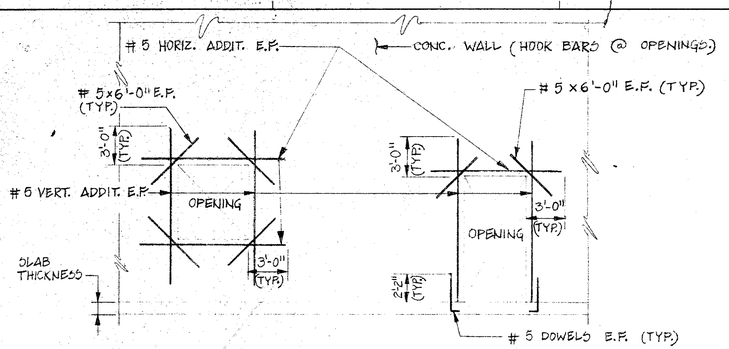

ADDITIONAL REINFORCING STEEL AT OPENINGS IN CONTROL BUILDING

BAR SIZE	TENSION DEVELOPMENT LENGTH "l_d"
#3	12"
#4	12"
#5	15"
#6	19"
#7	26"
#8	35"
#9	44"
#10	56"
#11	68"

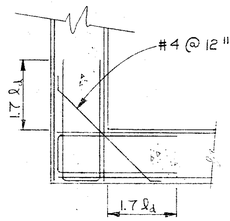

BENT BARS U SHALL BE AT LEAST AS MUCH AS HORIZ. REINF. WITH WHICH THEY ARE SPLICED

CORNER

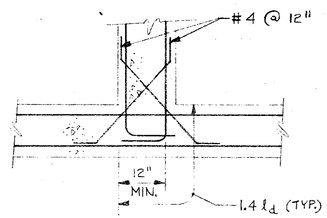

INTERSECTION

WALL REINFORCEMENT

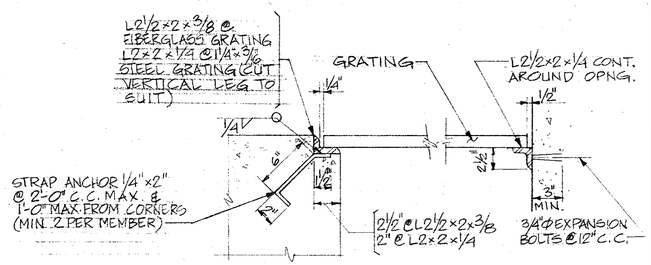

NOTES:
1. STEEL GRATING & ALL ANGLES SHALL BE HOT-DIPPED GALVANIZED AFTER FABRICATION.
2. ANGLES SHALL BE CONT. AROUND OPNG., WELDED TO FORM A COMPLETE FRAME.

GRATING SUPPORT

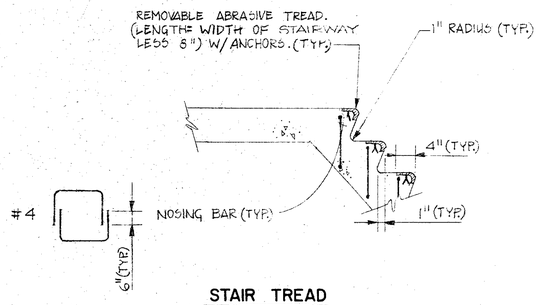

STAIR TREAD

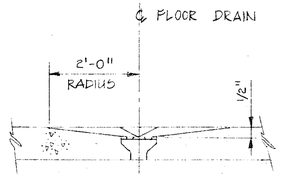

DETAIL APPLIES ONLY WHERE LEVEL FLOOR OCCURS.

PITCHED SLAB AT FLOOR DRAIN

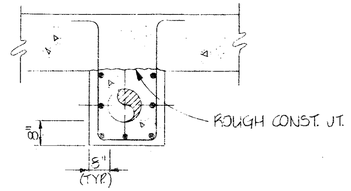

NOTE: ALL REINFORCING SHOWN SHALL BE #4 @ 12"

PIPE ENCASEMENT

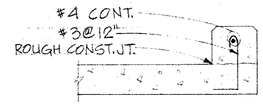

TYPICAL CURB DETAIL

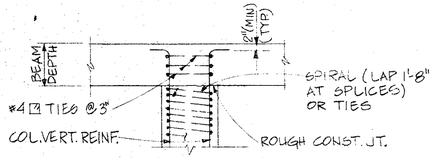

NOTE: COLUMNS SHALL HAVE DOWELS FROM FOUNDATIONS OR CONSTRUCTION BELOW OF SAME SIZE & SPACING AS COL. VERT. REINF.

COLUMN DETAIL

Record Drawing
These record drawings have been prepared in part, on the basis of information compiled and furnished by others. Kennedy/Jenks/Chilton is not responsible for any errors or omissions in this document as a result of information provided by others.
Dated APR. 29, 19 82

Revised	Description	Submit.	Appr'd.	Date
Refer to Tracing for Latest Revision				

Reference Information and Notes:

Designed S.H.D.
Drawn I.H.
Checked S.H.D.
Date 1-29-81

Wastewater Plant Improvements C-06-2464
Sausalito - Marin City Sanitary District
Kennedy/Jenks Engineers San Francisco
Submitted: Walter F. Bassman C9370 Approved: Robert J. Avery

TYPICAL STRUCTURAL DETAILS

Scale NONE
Job No. 0112
Sheet S-2 of

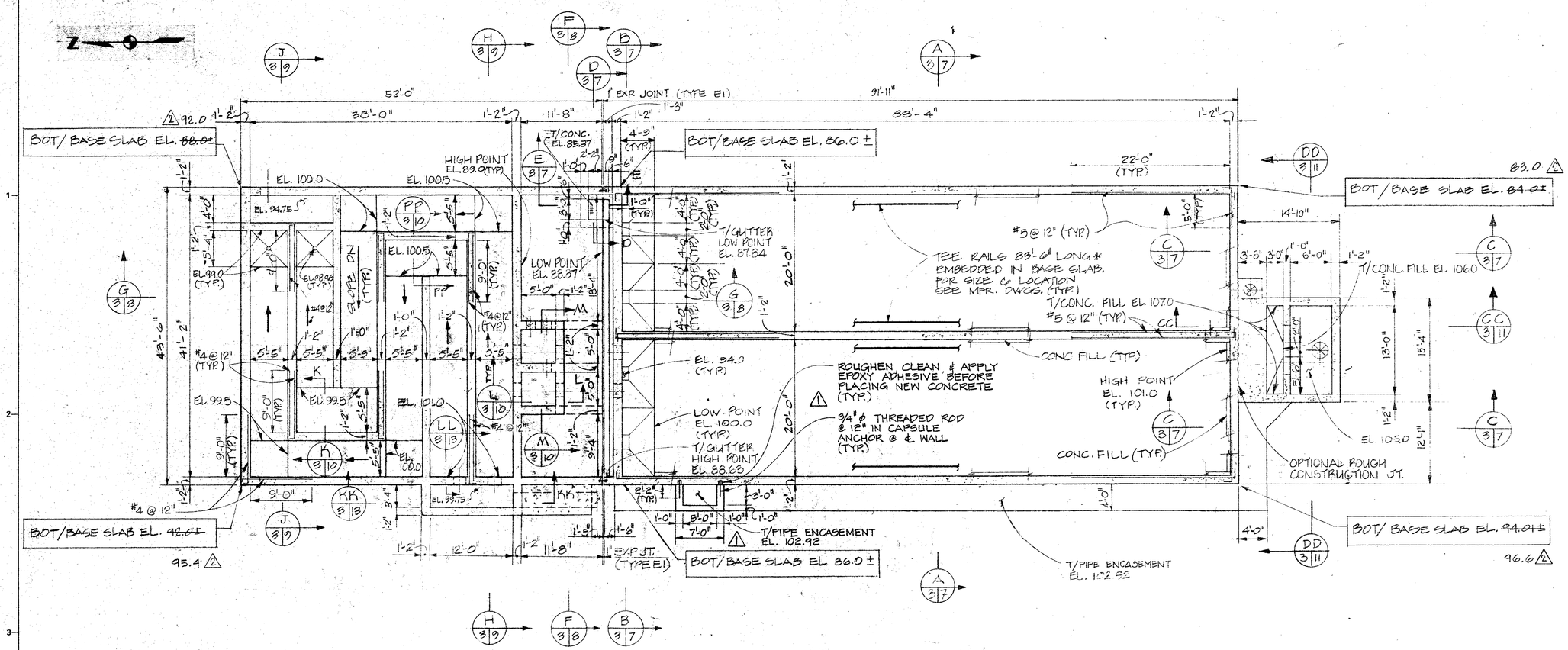

NOTES:

1. REINF SHOWN ON THIS SHEET SHALL BE IN ADDITION TO REINF SHOWN IN SECTIONS AND ON SHEET S-2.
2. PIPES ENCASED IN BASE SLAB NOT SHOWN FOR CLARITY - SEE MECH. DWGS. FOR SIZE AND LOCATION OF PIPES.
3. FOR SIZE & LOCATION OF OPENINGS SEE MECH. DWGS.
4. FOR DETAILS OF CONC. FILL SEE MFR., MECH., AND PERTINENT STRUCTURAL DWGS.
5. WALLS SHALL BE SHORED DURING TESTING UNLESS FLOORS AT EL. 115.0 & EL. 118.0 ARE IN PLACE.
6. ALL GRATING SHOWN SHALL BE GALVANIZED STEEL GRATING 1¼" × 3/16".
7. GRATING AT EL. 94.5 NOT SHOWN FOR CLARITY - SEE MECH. DWGS.
8. ACCESS PLATFORM NOT SHOWN FOR CLARITY - SEE SHEETS S-22, S-23 & S-24

BASE PLAN
SCALE: 1/8" = 1'-0"

Record Drawing

These record drawings have been prepared, in part, on the basis of information compiled and furnished by others. Kennedy/Jenks is not responsible for any errors or omissions in this document as a result of information provided by others.
Dated APR. 29, 88

GRAPHIC SCALE
1/8"=1'-0" 0 5 10 15 20 25

RECORD DRAWING

Revised	Description	Submit.	Appr'd.	Date
2	ACTUAL ELEVATIONS			
1	CO NO. 24			

Refer to Tracing for Latest Revision

Reference Information and Notes:

Designed: S.W.D., BMF, SMY
Drawn: BMF, AYS
Checked: S.W.D.
Date: 1-29-81

Kennedy/Jenks Engineers — San Francisco
Submitted: Walter J. Sherman 09370
Approved: Robert J. Owen

SECONDARY STRUCTURE
BASE PLAN

Scale: 1/8"=1'-0"
Job No. 0112
Sheet S-3 of

62

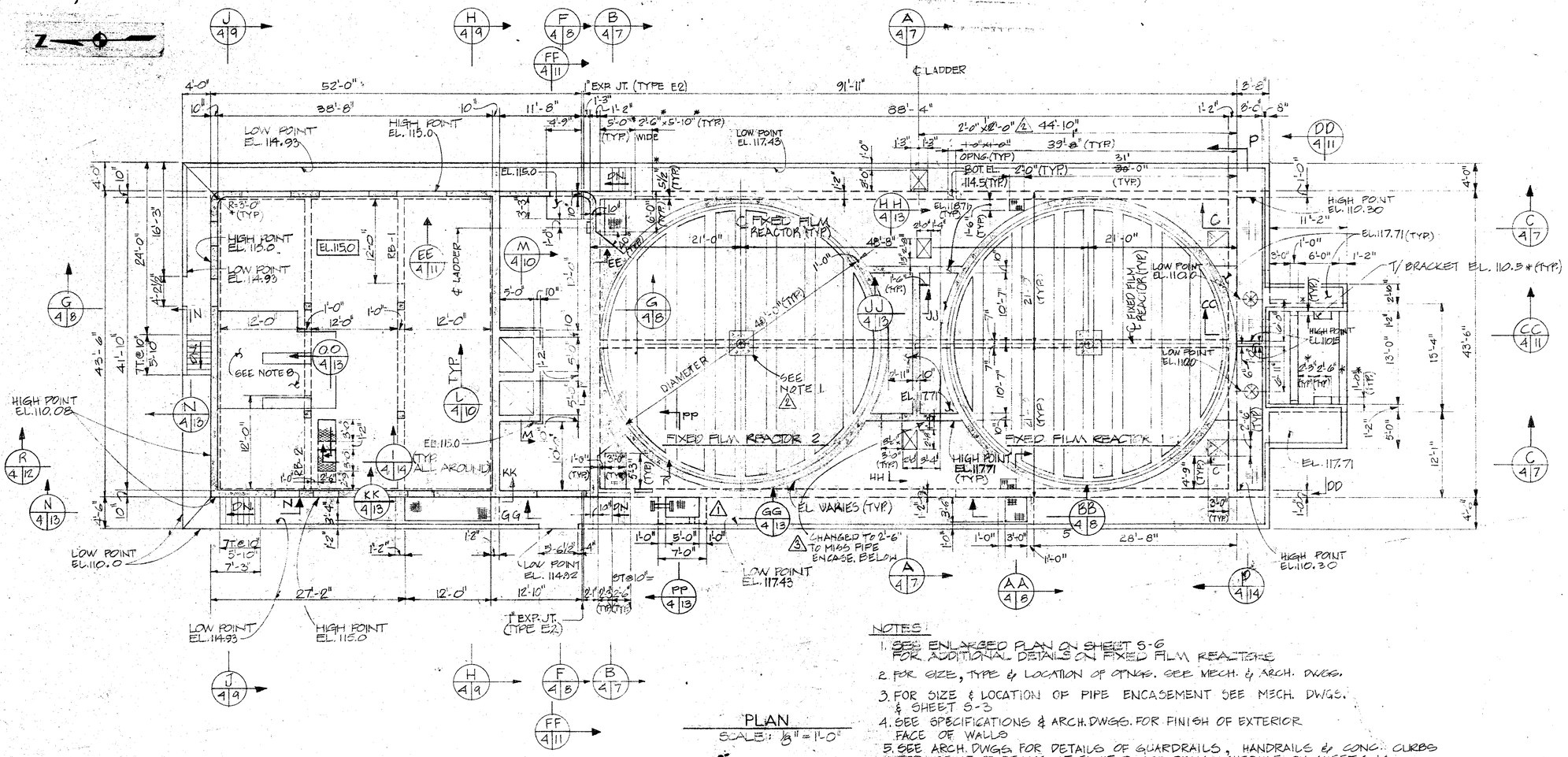

PLAN
SCALE: 1/8" = 1'-0"

NOTES:

1. SEE ENLARGED PLAN ON SHEET S-6 FOR ADDITIONAL DETAILS ON FIXED FILM REACTORS
2. FOR SIZE, TYPE & LOCATION OF OPNGS. SEE MECH. & ARCH. DWGS.
3. FOR SIZE & LOCATION OF PIPE ENCASEMENT SEE MECH. DWGS. & SHEET S-3
4. SEE SPECIFICATIONS & ARCH. DWGS. FOR FINISH OF EXTERIOR FACE OF WALLS
5. SEE ARCH. DWGS. FOR DETAILS OF GUARDRAILS, HANDRAILS & CONC. CURBS
6. FOR REINF. OF BEAMS AT EL. 115.0 SEE BEAM SCHEDULE ON SHEET S-14
7. ALL GRATING SHOWN SHALL BE FIBERGLASS GRATING 1 1/2 DEEP
8. FOR SIZE AND LOCATION OF PADS AND SLAB DEPRESSION AT CONTROL BUILDING SEE ARCH. DWGS.
9. METAL STAIRS NOT SHOWN FOR CLARITY - FOR DETAILS SEE ARCH. DWGS. & SPECIFICATIONS.
10. ACCESS PLATFORM NOT SHOWN FOR CLARITY - SEE SHEETS S-22, S-23, & S-24.

Record Drawing
These record drawings have been prepared, in part, on the basis of information compiled and furnished by others. Kennedy/Jenks/Chilton is not responsible for any errors or omissions in this document as a result of information provided by others.
Dated APR 29, 19 88

Record Drawing
RECORD DRAWING

GRAPHIC SCALE
1/8" = 1'-0" 0 5 10 15 20 25

Revised	Description	Submit.	Appr'd.	Date
3	FIELD CHANGE			
2	CLARIFICATION			
1	CO. NO. 24			

Refer to Tracing for Latest Revision

Reference Information and Notes:
1. REINFORCING FOR CENTER FFR COLUMNS SIMILAR TO PIPE ENCASEMENT DETAIL ON SHT. S-2. 2

Designed SH.D, BMF, SWY
Drawn AYS, BMF, RBC
Checked SH.D
Date 1-29-81

Wastewater Plant Improvements C-06-2464
Sausalito - Marin City Sanitary District
Kennedy/Jenks Engineers San Francisco
Submitted: Walter E. Kenna 6937C Approved: Paul J. Ames

SECONDARY STRUCTURE
PLAN AT EL. 120.17

Scale 1/8"=1'-0"
Job No.
Sheet S-4 of

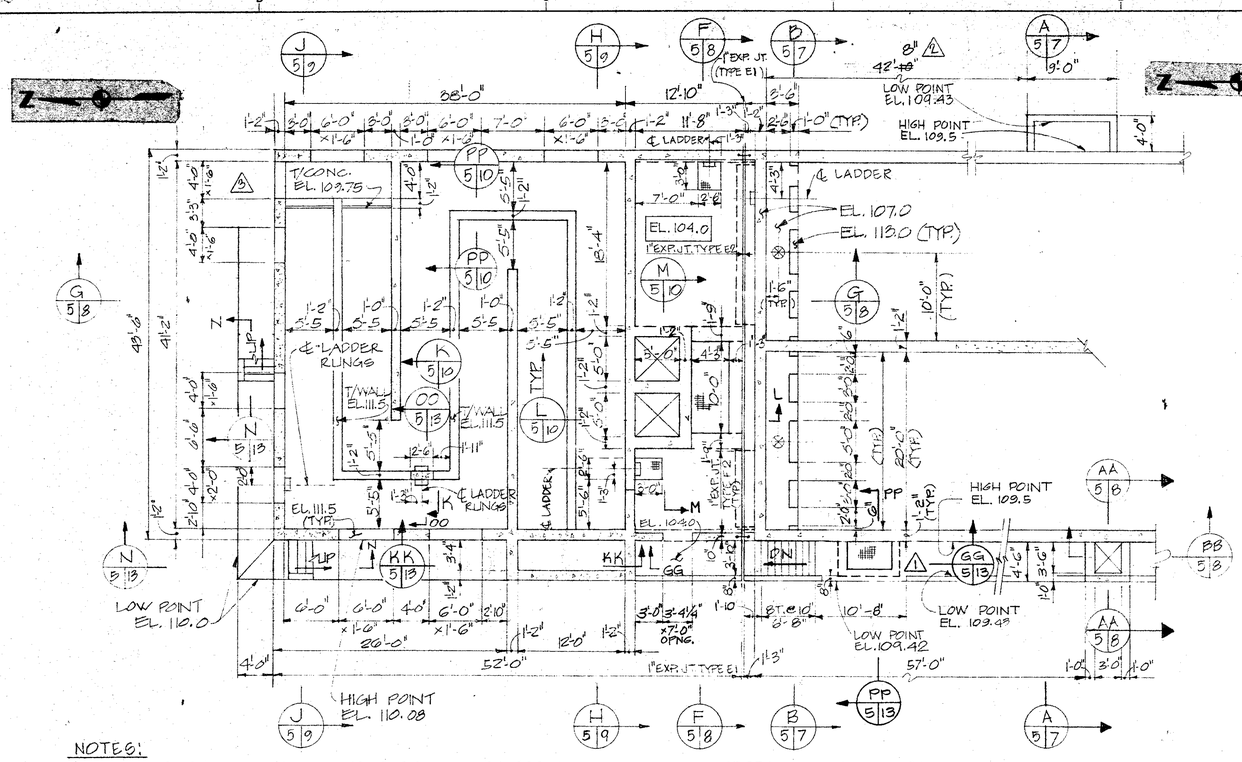

NOTES:

1. SEE ARCH. DWGS. FOR DETAILS OF GUARDRAILS, HANDRAILS, LADDERS & CONC. CURBS
2. ALL GRATING SHOWN SHALL BE GALVANIZED STEEL GRATING 1¼" x 3/16"
3. FOR SIZE & LOCATION OF OPENINGS SEE MECH. DWGS

PARTIAL PLAN AT EL. 113.0
SCALE: 1/8" = 1'-0"

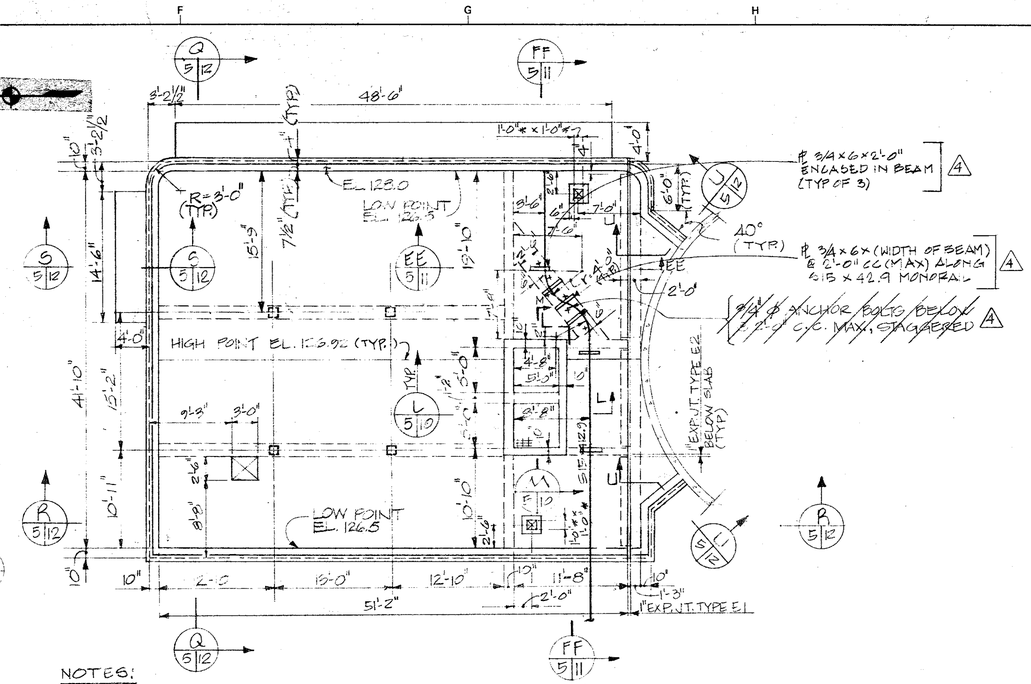

NOTES:

1. FOR SIZE & LOCATION OF ADDITIONAL OPNGS. & CONC. CURBS AROUND OPNG. SEE MECH. & ARCH. DWGS.
2. ALL GRATING SHOWN SHALL FIBERGLASS GRATING 1½" DEEP.

PARTIAL PLAN AT EL. 128.0
SCALE: 1/8" = 1'-0"

Record Drawing
These record drawings have been prepared, in part, on the basis of information compiled and furnished by others. Kennedy/Jenks is not responsible for any errors or omissions in this document as a result of information provided by others.
Dated APR 29, 19 88

GRAPHIC SCALE
1/8" = 1'-0" 0 5 10 15 20 25

Revised	Description	Submit.	Appr'd.	Date
4	SUBSTITUTION			
3	C.O. NO. 3			
2	CLARIFICATION			
1	CO. NO. 24			

Refer to Tracing for Latest Revision

Reference Information and Notes:

Designed: S.J.B. RMF SHY
Drawn: AYS, RBC
Checked: SHB
Date: 1-29-81

Wastewater Plant Improvements C-06-2464
Sausalito - Marin City Sanitary District
Kennedy/Jenks Engineers San Francisco
Submitted: Walter T. Herman
Approved: Robert J. Aiuvalasit

SECONDARY STRUCTURE
PARTIAL PLANS AT EL. 113.0 AND 128.0

Scale: 1/8" = 1'-0"
Job No. 0112
Sheet S-5 of

BEAM SCHEDULE

MARK	SIZE B	SIZE D	REINFORCING BOTTOM	REINFORCING TOP	STIRRUPS SIZE	STIRRUPS TYPE	STIRRUPS SPACINGS	REMARKS
B-1	18	36	5#9	3#7 CONT.	#3	▭	@ 12" THRUOUT	
B-2	18	36	5#9	3#9 CONT.	#3	▭	@ 6" THRUOUT	
B-3	18	36	5#9	3#9 CONT.	#3	▭	@ 6" THRUOUT	
B-4	18	36	5#7	2#7 CONT.	#3	▭	@ 12" THRUOUT	

NOTE: 3 INDIE TOP CONT. BARS AS SHOWN ON TYPICAL BEAM DETAIL ON THIS SHEET.

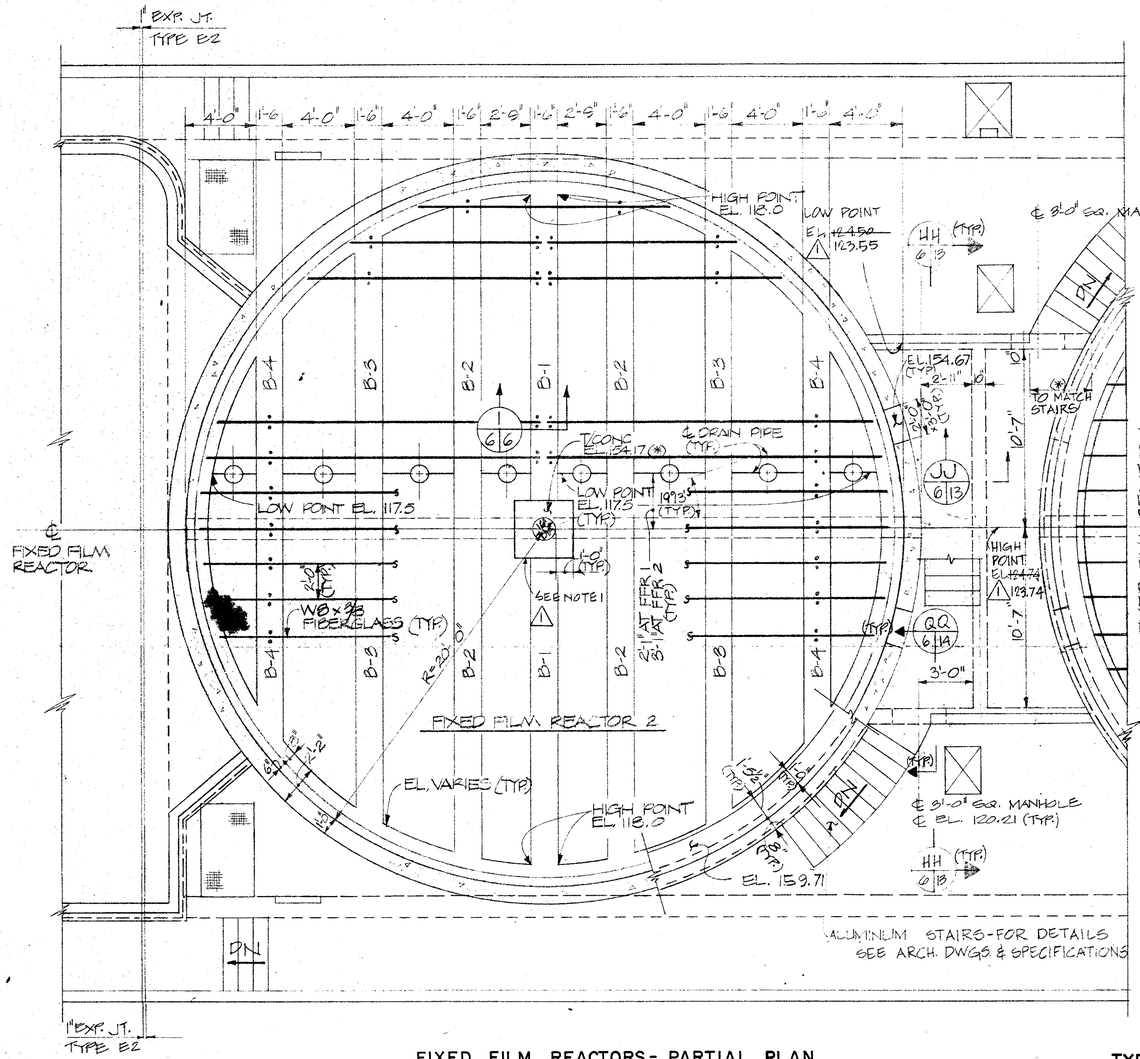

FIXED FILM REACTORS - PARTIAL PLAN

SCALE: 1/4" = 1'-0"

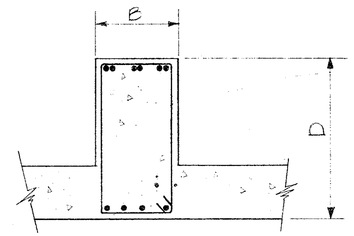

TYPICAL BEAM DETAIL

NO SCALE

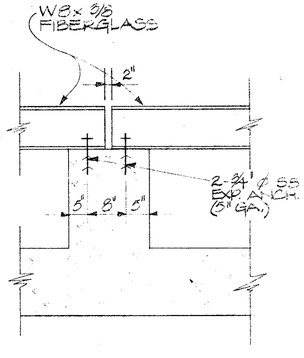

TYPICAL FIBERGLASS BEAM CONNECTION

DETAIL 1/6/6

NO SCALE

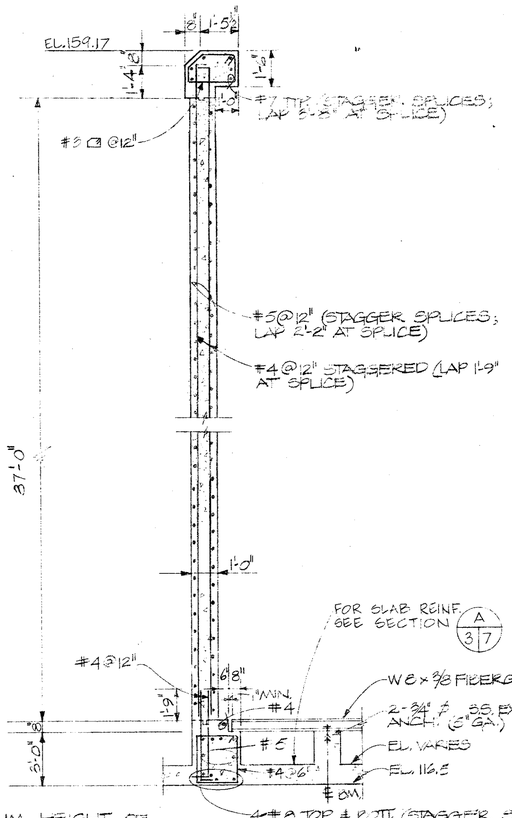

NOTE: FOR MAXIMUM HEIGHT OF POUR SEE SPECS.

TYPICAL WALL SECTION

SCALE: 1/4" = 1'-0"

GRAPHIC SCALE 1/4" = 1'-0" (0, 5, 10)

NOTES:

1. BOLT W8 FIBERGLASS BEAMS AT EACH EXTERIOR CONC. BEAM. SUPPORT W/ 2-¾" ∅ SS EXP. ANCH. (5" GA.)
2. FOR SIZE AND LOCATION OF DRAIN PIPES, OPNGS. SEE MECH. DWGS.
3. SEE SPECIFICATIONS & ARCH. DWGS. FOR FINISH OF EXTERIOR FACE OF WALLS
4. FOR ADDIT. DETAILS SEE SHEET S-4.

Record Drawing
These record drawings have been prepared in part on the basis of information compiled and furnished by others, but the Engineer does not warrant or guarantee the accuracy or completeness of such information or assume any responsibility for any errors or omissions in the information so furnished.
Dated APR. 29 19 88

Revised	Description	Submit.	Appr'd.	Date
1	CLARIFICATION			

Refer to Tracing for Latest Revision

Reference Information and Notes:
1. REINFORCING FOR FFR CENTER COLUMNS SIMILAR TO DETAIL ON SHT. S-2 1

Record Drawing

Designed S.H.D., S.W.Y.
Drawn A.Y.S.
Checked S.H.D.
Date 1-29-81

Wastewater Plant Improvements C-06-2464
Sausalito - Marin City Sanitary District
Kennedy-Jenks Engineers San Francisco
Submitted: Walter E. Hausman 19370 Approved: Robert J. Ames

SECONDARY STRUCTURE
FIXED FILM REACTORS
PARTIAL PLAN, SECTION, DETAILS AND BEAM SCHEDULE

Scale AS SHOWN
Job No. 0112
Sheet S-6 of

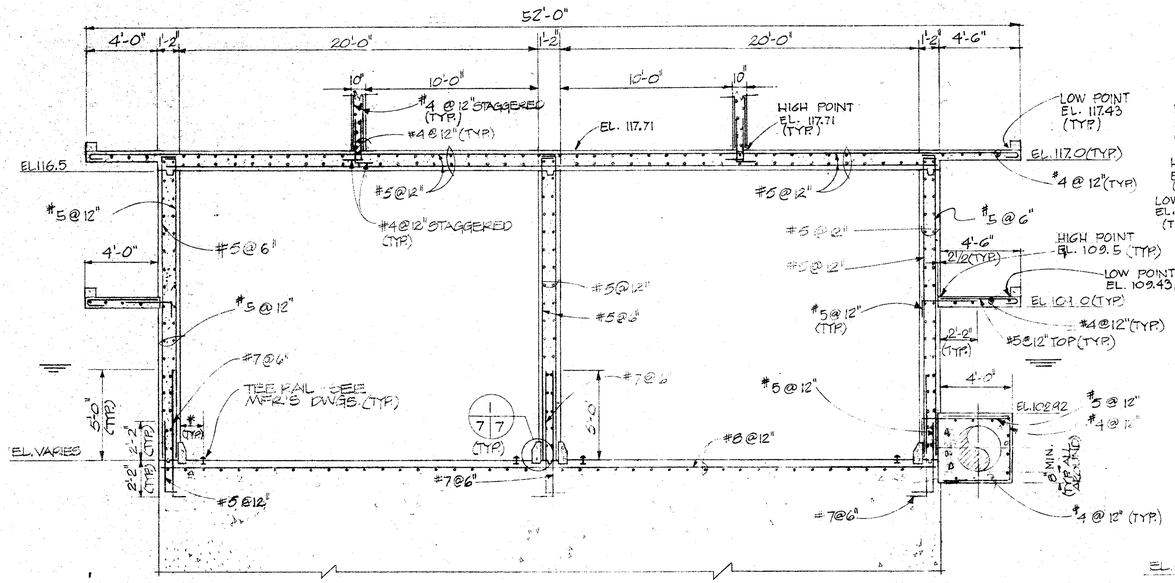

SECTION A
SCALE: 1/4"=1'-0" 3|7 4,5

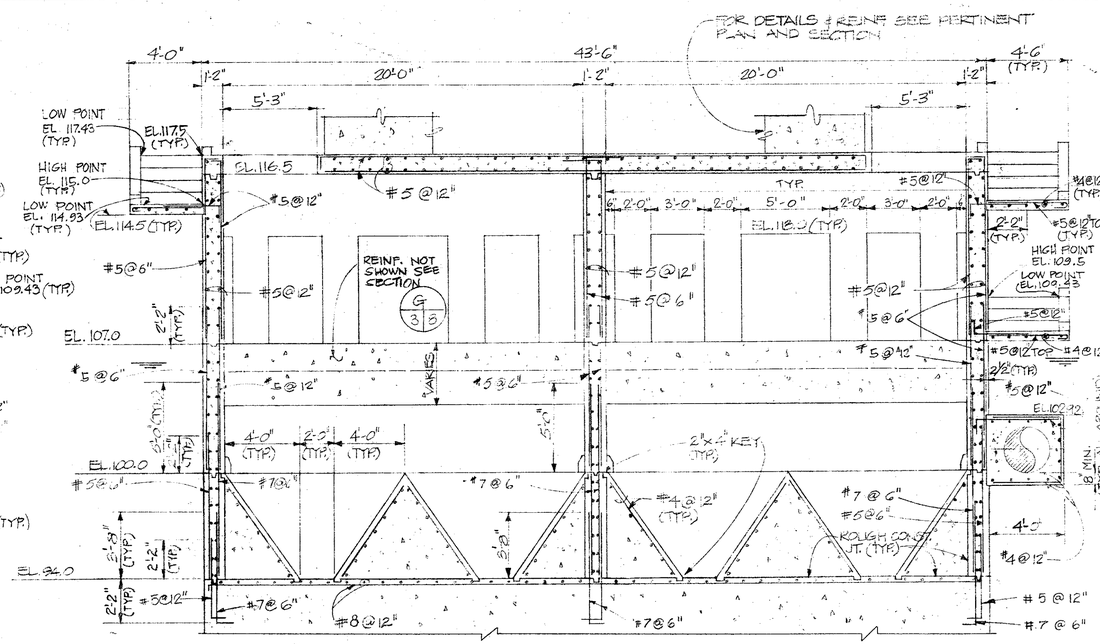

SECTION B
SCALE: 1/4"=1'-0" 3|7 4,5

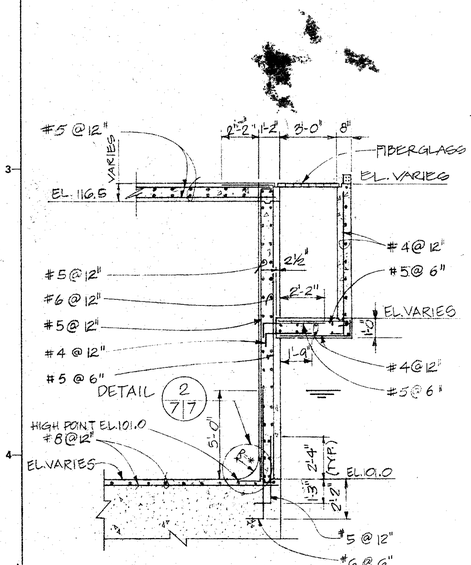

SECTION C
SCALE: 1/4"=1'-0" 3|7 4

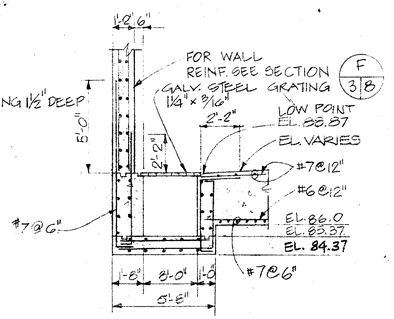

NOTE:
ALL REINFORCING SHOWN SHALL BE #5@12" UNLESS OTHERWISE NOTED

SECTION D
SCALE: 1/4"=1'-0" 3|7

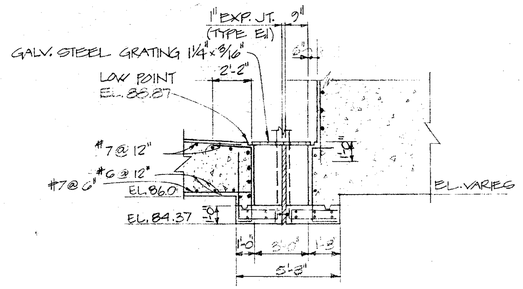

NOTE:
ALL REINFORCING SHOWN SHALL BE #5@12 UNLESS OTHERWISE NOTED

SECTION E
SCALE: 1/4"=1'-0" 3|7

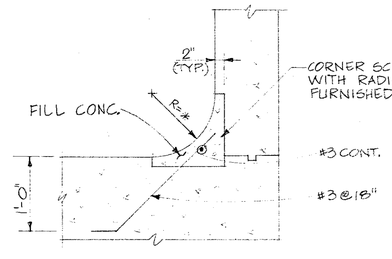

NOTE:
FOR REINF. NOT SHOWN SEE SECTION C 3|7

DETAIL 2
SCALE: 3/4"=1'-0" 7|7

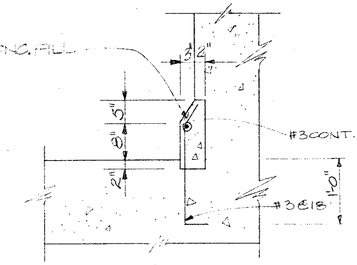

NOTE:
FOR REINF. NOT SHOWN SEE SECTION A 3|7

DETAIL 1
SCALE: 3/4"=1'-0" 7|7

NOTES:
1.) FOR SIZE & LOCATION OF PIPE OPNG. SEE MECH. DWGS.
2.) GUARDRAILS AND HANDRAILS NOT SHOWN FOR CLARITY - SEE ARCH. DWGS.
3.) ACCESS PLATFORM NOT SHOWN FOR CLARITY - SEE SHEETS S-22, S-23 & S-24.

GRAPHIC SCALE
1/4" = 1'-0" 0 5 10
3/4" = 1'-0" 0 1 2 3 4

Record Drawing
These record drawings have been prepared, in part, on the basis of information compiled and furnished by others. Kennedy/Jenks/Chilton is not responsible for any errors or omissions in this document as a result of information provided by others.
Dated APR. 27, 19 88

Revised	Description	Submit.	Appr'd.	Date
Refer to Tracing for Latest Revision				

Reference Information and Notes:

Designed S.H.D., B.M.F.
Drawn A.Y.S., R.S.C.
Checked S.H.D.
Date 1-29-81

Wastewater Plant Improvements C-06-2464
Sausalito - Marin City Sanitary District

Kennedy/Jenks Engineers — San Francisco
Submitted: Walter E. Hansman C5870 Approved: [signature]

SECONDARY STRUCTURE
SECTIONS

Scale: AS SHOWN
Job No. 0112
Sheet S-7 of

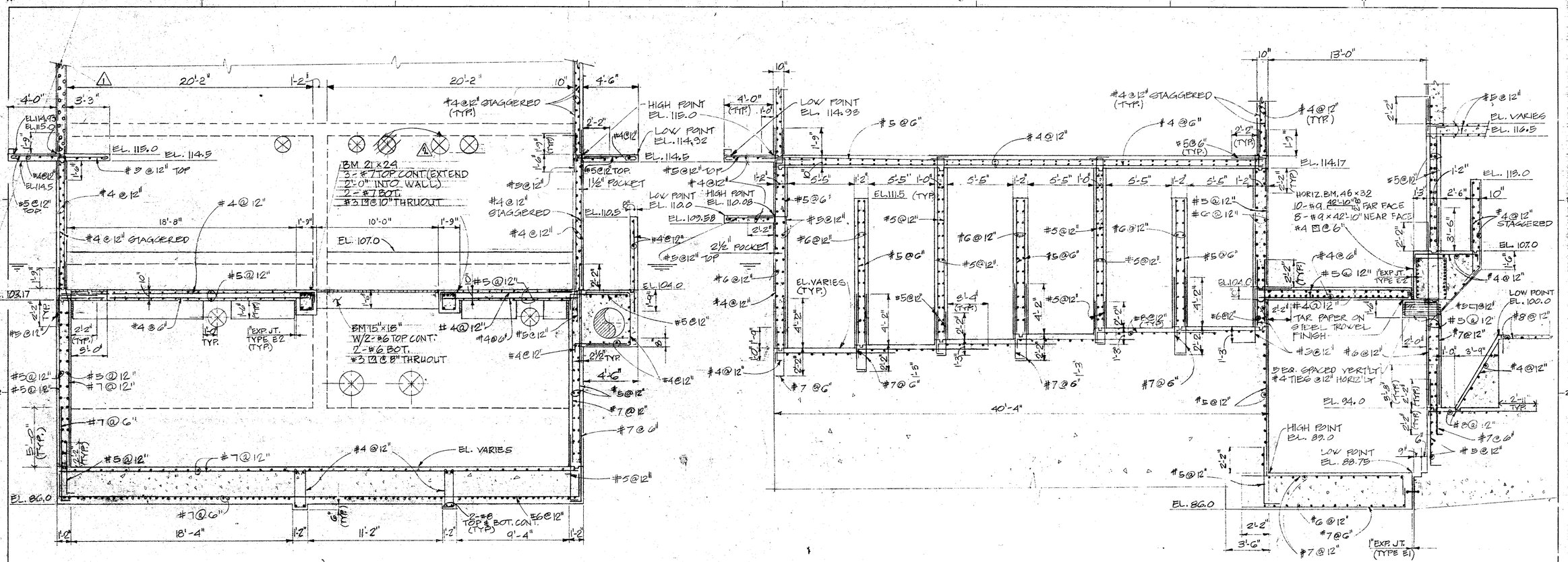

SECTION F — SCALE: 1/4" = 1'-0" (4,5 | 3 | B)

SECTION G — SCALE: 1/4" = 1'-0" (4,5 | 3 | B)

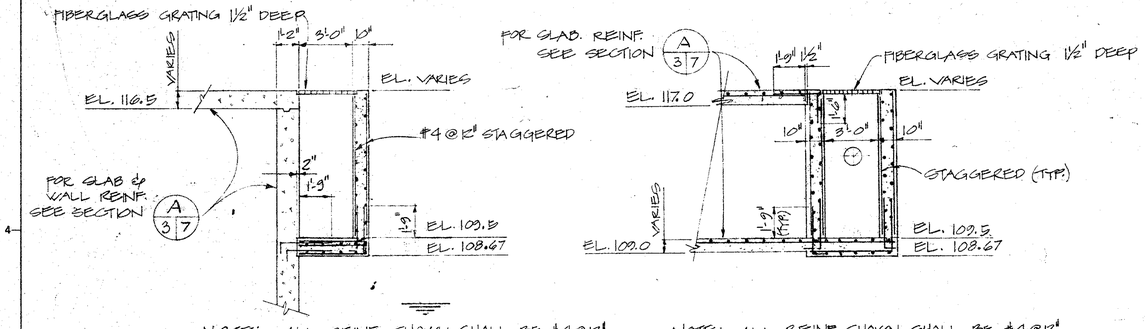

NOTE: ALL REINF. SHOWN SHALL BE #4@12" UNLESS OTHERWISE NOTED.

SECTION AA — SCALE: 1/4" = 1'-0" (4 | B)

NOTE: ALL REINF. SHOWN SHALL BE #4@12" UNLESS OTHERWISE NOTED.

SECTION BB — SCALE: 1/4" = 1'-0" (5 | 4 | B)

NOTES:
1.) FOR SIZE AND LOCATION OF PIPE OPNG. SEE MECH. DWGS.
2.) GUARDRAILS AND LADDERS NOT SHOWN FOR CLARITY - SEE MECH. & ARCH. DWGS.
3.) FOR DETAILS OF GRATING AT EL. 94.5 SEE MECH. DWGS.
4.) ACCESS PLATFORM NOT SHOWN FOR CLARITY SEE SHEETS S-22, S-23 & S-24

Record Drawing
These record drawings have been prepared, in part, on the basis of information compiled and furnished by others. Kennedy/Jenks/Chilton is not responsible for any errors or omissions in this document as a result of information provided by others.
Dated APRIL 29, 19 88

GRAPHIC SCALE
1/4" = 1'-0" — 0 — 5 — 10

Revised	Description	Submit.	Appr'd.	Date
2	FIELD CHANGE			
1	CLARIFICATION			

Refer to Tracing for Latest Revision

Reference Information and Notes:

Designed: S.W.D, B.M.F, S.L.Y
Drawn: A.Y.S, R.B.C
Checked: S.H.B.
Date: 1-29-81

Wastewater Plant Improvements C-06-2464
Sausalito - Marin City Sanitary District
Kennedy/Jenks Engineers — San Francisco
Submitted: C9370 — Approved:

SECONDARY STRUCTURE
SECTIONS

Scale: 1/4" = 1'-0"
Job No. 0112
Sheet S-8 of

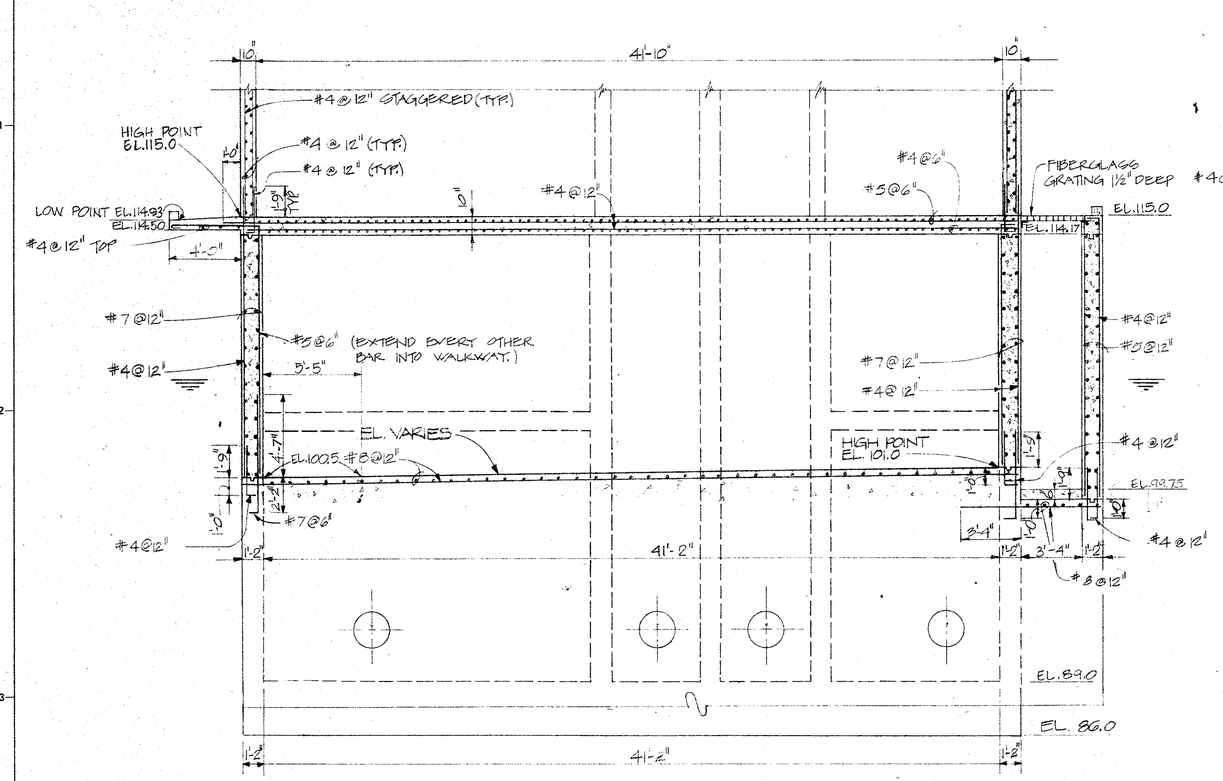

SECTION H
SCALE: 1/4" = 1'-0"
4,5 3|9

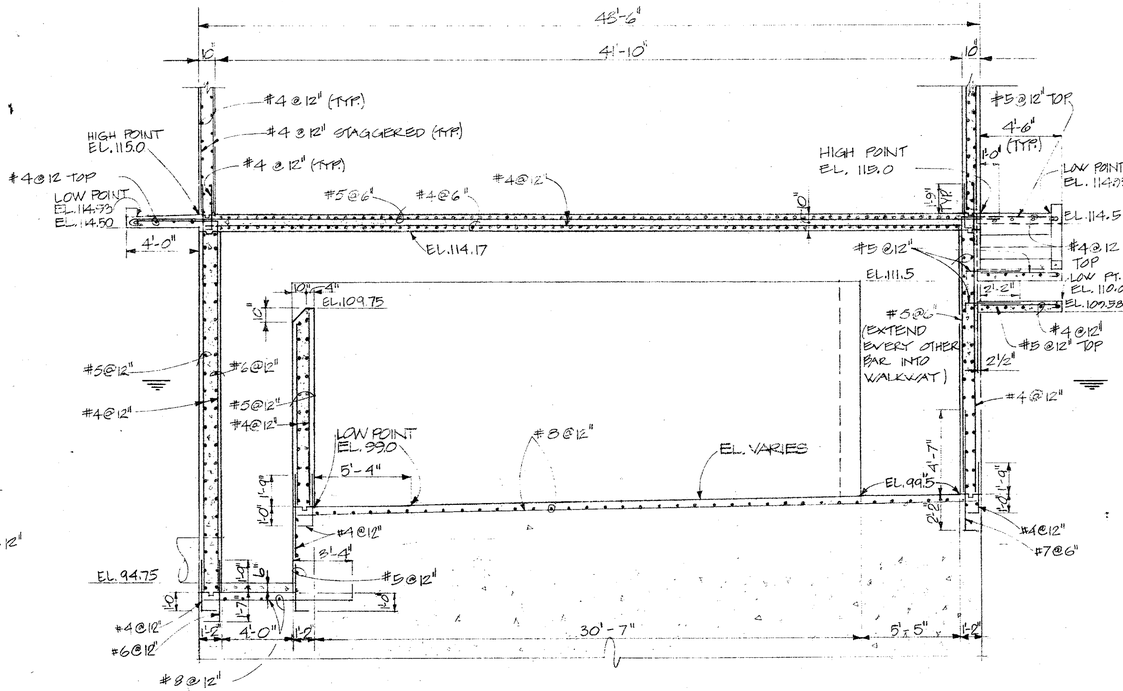

SECTION J
SCALE: 1/4" = 1'-0"
4,5 3|9

NOTES:
1.) FOR SIZE & LOCATION OF PIPE OPNGS - SEE MECH. DWGS.
2.) GUARDRAILS NOT SHOWN FOR CLARITY - SEE MECH. DWGS.
3.) ACCESS PLATFORM NOT SHOWN FOR CLARITY - SEE SHEETS S-22, S-23 & S-24

Record Drawing
These record drawings have been prepared, in part, on the basis of information compiled and furnished by others. Kennedy/Jenks/Chilton is not responsible for any errors or omissions in this document as a result of information provided by others.
Dated APR. 29, 19 88

GRAPHIC SCALE
1/4" = 1'-0" 0 5 10

Revised	Description	Submit.	Appr'd.	Date

Refer to Tracing for Latest Revision

Reference Information and Notes:

Designed: SHD, BMF, SWY
Drawn: AYS
Checked: SHD
Date: 1-29-81

Wastewater Plant Improvements C-06-2464
Sausalito - Marin City Sanitary District

Kennedy/Jenks Engineers **San Francisco**

Submitted: Walter F. Hansman C9370
Approved: Robert J. Owen

SECONDARY STRUCTURE
SECTIONS

Scale: 1/4" = 1'-0"
Job No. 0112
Sheet S-9 of

68

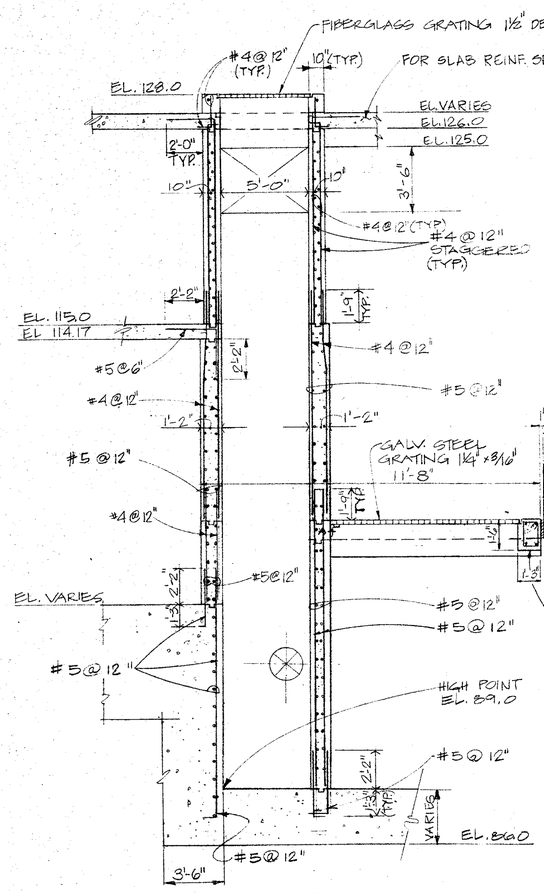

NOTES:
1. FOR SLAB REINF. SEE SECTION G 3|8 UNLESS OTHERWISE NOTED
2. FOR SIZE AND LOCATION OF PIPE OPENINGS SEE MECH. DWGS.
3. GRATING PLATFORM AT EL. 94.50 NOT SHOWN FOR CLARITY - SEE MECH. DWGS.

SECTION L 3|10
SCALE: 1/4" = 1'-0"

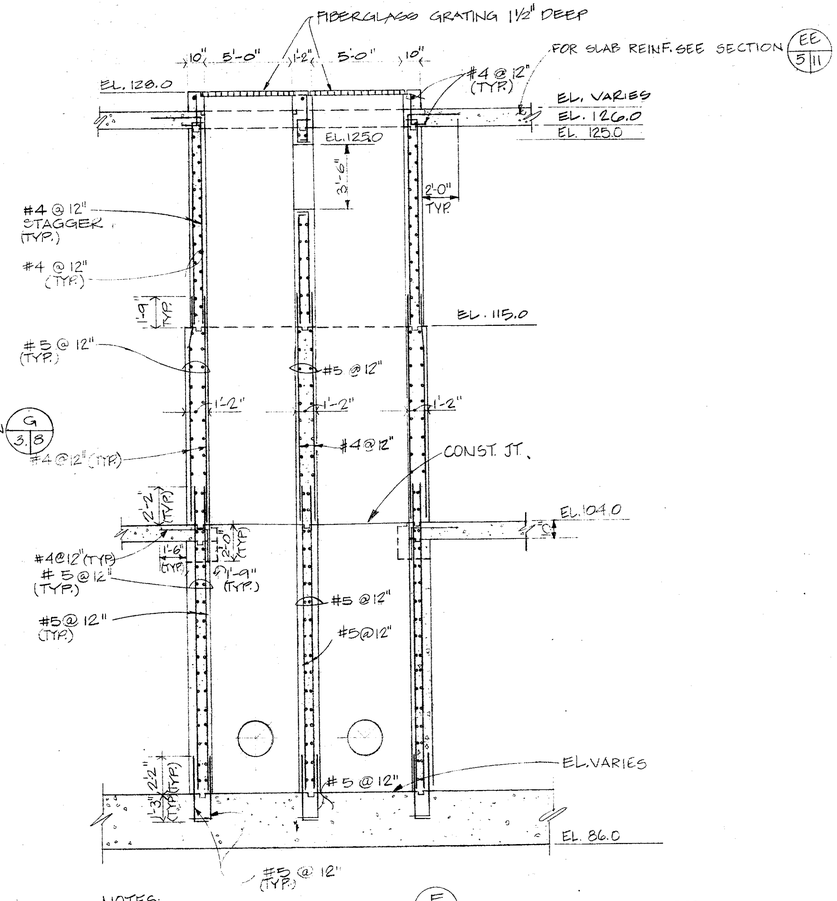

NOTES:
1. FOR SLAB REINF. SEE SECTION F 3|8 UNLESS OTHERWISE NOTED
2. FOR SIZE AND LOCATION OF PIPE OPENINGS SEE MECH. DWGS.
3. GRATING PLATFORM AT EL. 94.50 NOT SHOWN FOR CLARITY - SEE MECH. DWGS.

SECTION M 3|10
SCALE: 1/4" = 1'-0"

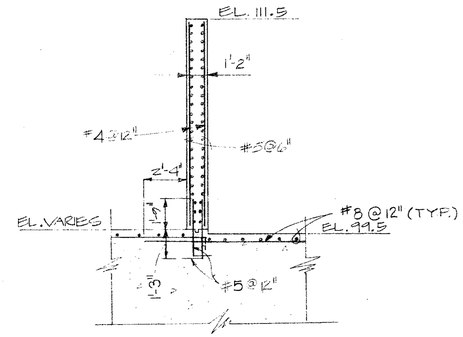

SECTION K 3|10
SCALE: 1/4" = 1'-0"

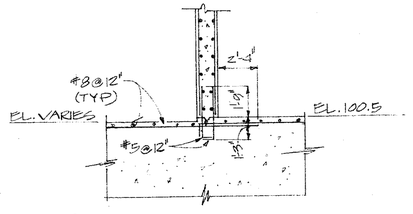

NOTE:
FOR WALL REINF. SEE SECTION K 3|10

SECTION PP 3|10
SCALE: 1/4" = 1'-0"

Record Drawing
These record drawings have been prepared, in part, on the basis of information compiled and furnished by others. Kennedy/Jenks/Chilton is not responsible for any errors or omissions in this document as a result of information provided by others.
Dated APR. 29 19 88

RECORD DRAWING

GRAPHIC SCALE
1/4" = 1'-0" 0 5 10

Revised	Description	Submit.	Appr'd.	Date

Refer to Tracing for Latest Revision

Reference Information and Notes:

Record Drawing

Designed: Sh.D., BMF
Drawn: CB, RBC
Checked: Sh.D.
Date: 1-29-81

Wastewater Plant Improvements C-06-2464
Sausalito - Marin City Sanitary District
Kennedy/Jenks Engineers San Francisco
Submitted: Walter F. Bassman C9370
Approved: Robert J. Avery

SECONDARY STRUCTURE
SECTIONS

Scale: 1/4" = 1'-0"
Job No. 0112
Sheet S-10 of

69

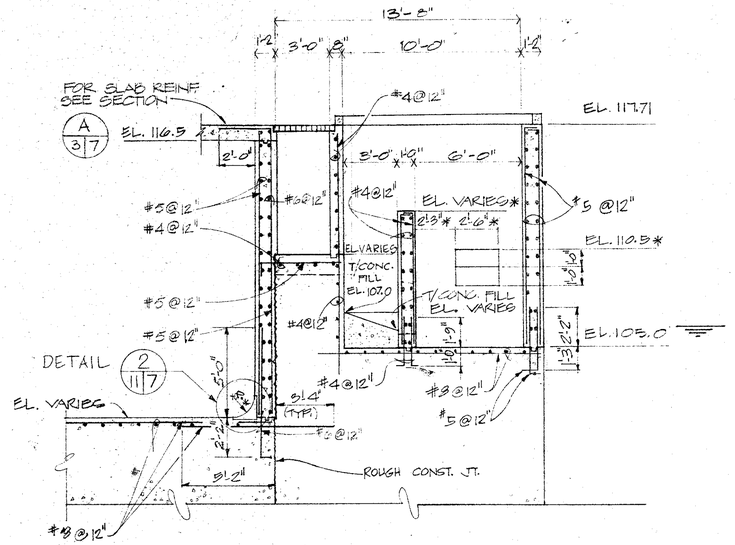

SECTION CC
SCALE: 1/4"=1'-0" 4 3|11

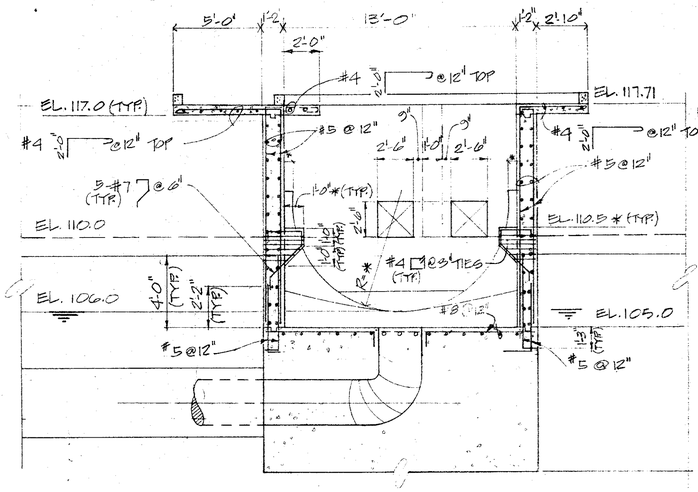

NOTE: FOR SIZE & LOCATION OF PIPE OPENINGS SEE MECHANICAL SHEETS.

SECTION DD
SCALE: 1/4"=1'-0" 4 3|11

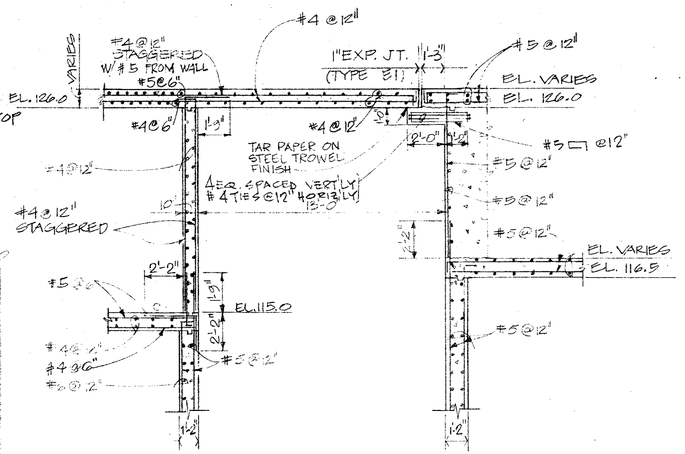

SECTION EE
SCALE: 1/4"=1'-0" 5 4|11

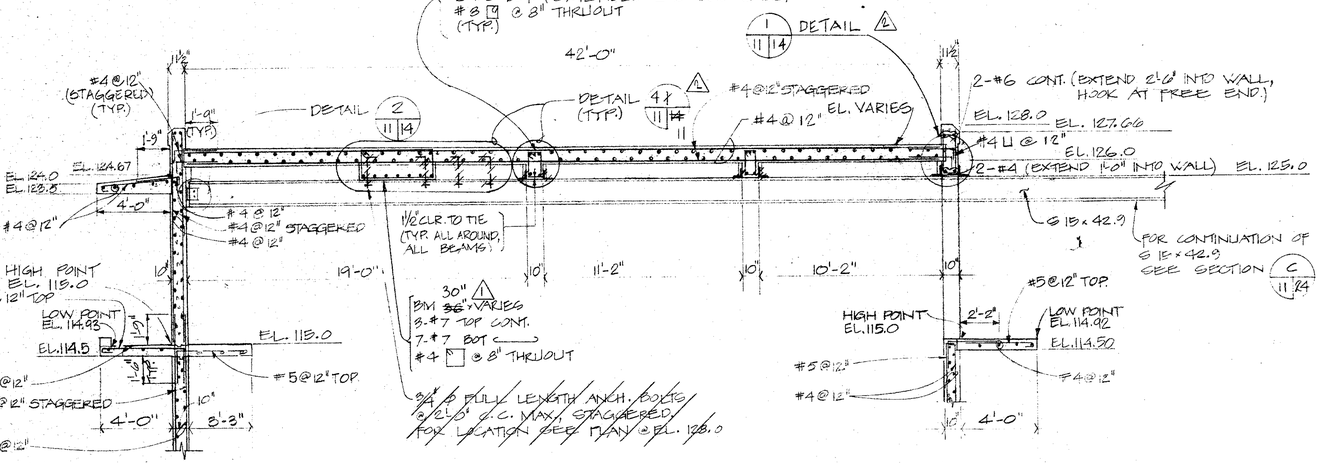

SECTION FF
SCALE: 1/4"=1'-0" 5 4|11

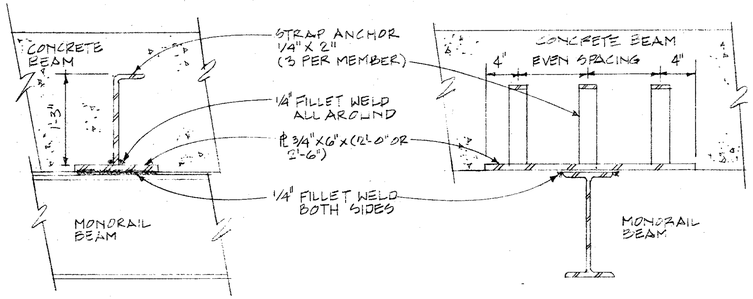

DETAIL 4 2 11|11
NO SCALE

NOTE: GUARDRAILS NOT SHOWN FOR CLARITY- SEE ARCH. & MECH. DWGS.

GRAPHIC SCALE
1/4" = 1'-0"
0 5 10

Record Drawing
These record drawings have been prepared, in part, on the basis of information compiled and furnished by others. KennedyJenks/Chilton is not responsible for any errors or omissions in this document as a result of information provided by others.
Dated APR. 29 19 86

Revised	Description	Submit.	Appr'd.	Date
2	SUBSTITUTION			
1	CLARIFICATION			

Refer to Tracing for Latest Revision

Reference Information and Notes:

Designed: S.H.D., BMF
Drawn: AYS, RBC
Checked: S.H.D.
Date: 1-29-81

Wastewater Plant Improvements C-06-2464
Sausalito - Marin City Sanitary District

KennedyJenks Engineers San Francisco

Submitted: C9370 Approved:

SECONDARY STRUCTURE
SECTIONS

Scale: 1/4"=1'-0"
Job No. 0112
Sheet S-11 of

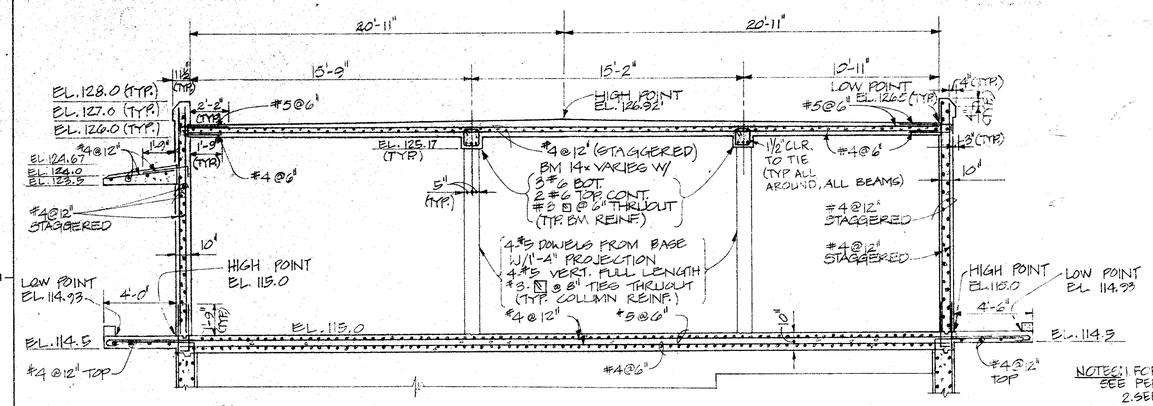

NOTES: 1. SEE ARCH. DWGS. FOR DETAIL OF OVERHANG
2. FOR WALL REINF. NOT CALLED SEE PERTINENT SECTIONS (TYP.)

SECTION Q
SCALE: 1/4" = 1'-0" (5/12)

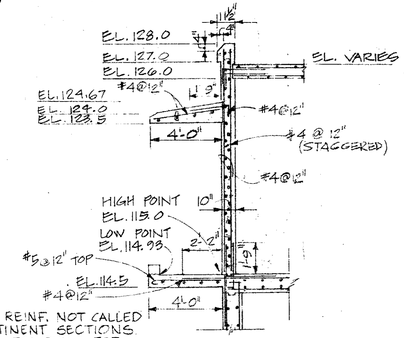

NOTES: 1. FOR REINF. NOT CALLED SEE PERTINENT SECTIONS
2. SEE ARCH. DWGS. FOR DETAIL OF OVERHANG

SECTION S
SCALE: 1/4" = 1'-0" (5/12)

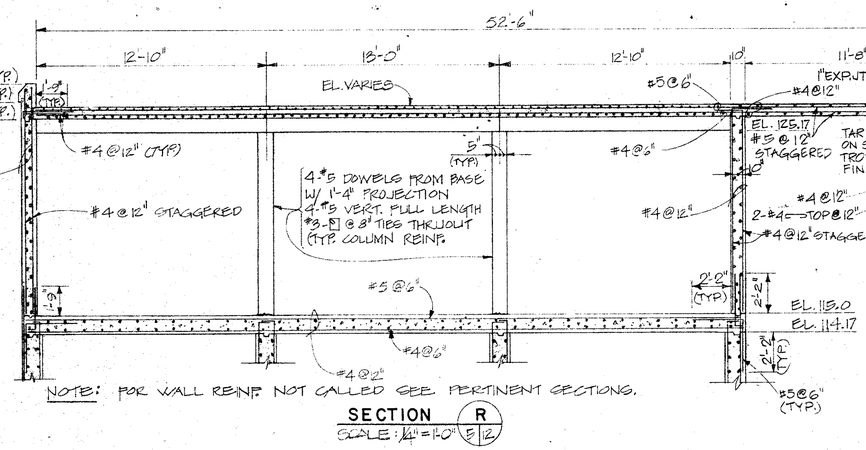

NOTE: FOR WALL REINF. NOT CALLED SEE PERTINENT SECTIONS.

SECTION R
SCALE: 1/4" = 1'-0" (5/12)

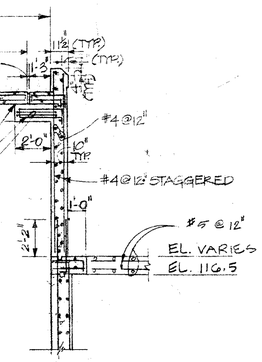

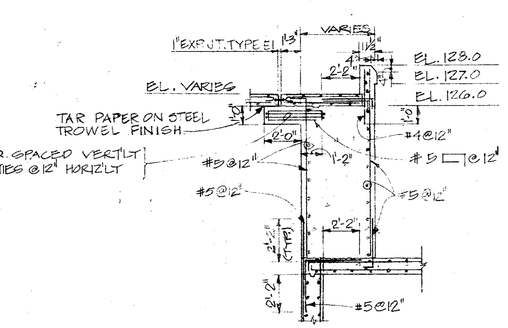

NOTE:
FOR REINF. NOT CALLED SEE PERTINENT SECTIONS.

SECTION U
SCALE: 1/4" = 1'-0" (5/12)

Record Drawing
These record drawings have been prepared, in part, on the basis of information compiled and furnished by others. Kennedy/Jenks/Chilton is not responsible for any errors or omissions in this document as a result of information provided by others.
Dated APR. 29 19 82

GRAPHIC SCALE
1/4" = 1'-0"
0 5 10

Revised	Description	Submit.	Appr'd.	Date
Refer to Tracing for Latest Revision				

Reference Information and Notes:

1

Designed: S.H.D. SHY, BMF
Drawn: AYS, RBC
Checked: S.H.D.
Date: 1-29-81

Wastewater Plant Improvements C-06-2464
Sausalito - Marin City Sanitary District
Kennedy/Jenks Engineers San Francisco
Submitted: Walter E. Gamma 09370
Approved: Robert J. Cooney

SECONDARY STRUCTURE
SECTIONS

Scale: 1/4" = 1'-0"
Job No. 0112
Sheet S-12 of

71

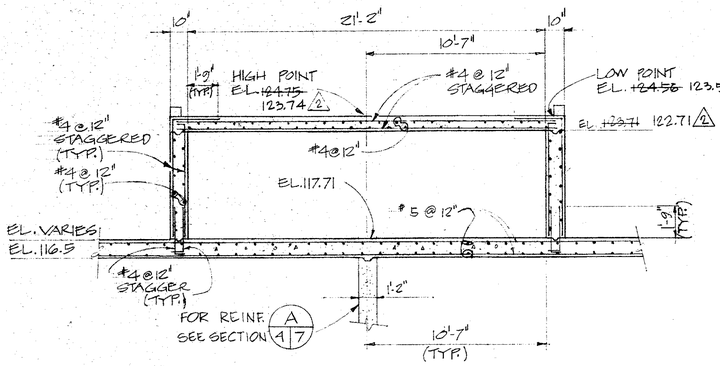

SECTION HH
SCALE: 1/4" = 1'-0" 4|13 6

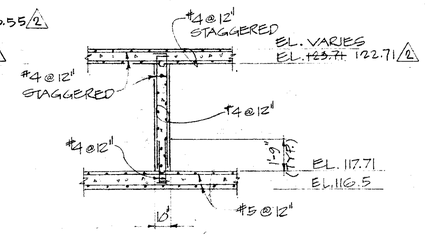

SECTION JJ
SCALE: 1/4" = 1'-0" 4|13 6

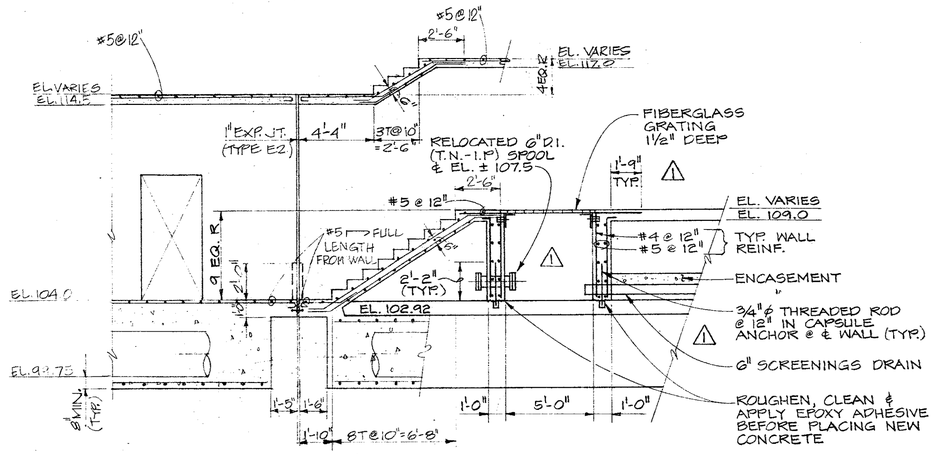

NOTES:
1.) ALL REINF. SHOWN SHALL BE #4 @ 12" UNLESS OTHERWISE NOTED.
2.) FOR SIZE AND LOCATION OF PIPE SLEEVES SEE MECH. & ARCH. DWGS

SECTION GG
SCALE: 1/4" = 1'-0" 4|13 5

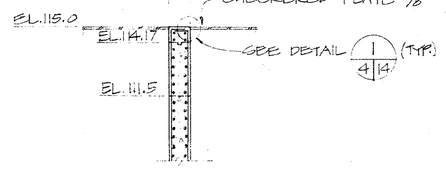

NOTE:
FOR WALL REINF. SEE SECTION K 3|13

SECTION OO
SCALE: 1/4" = 1'-0" 4|13 5

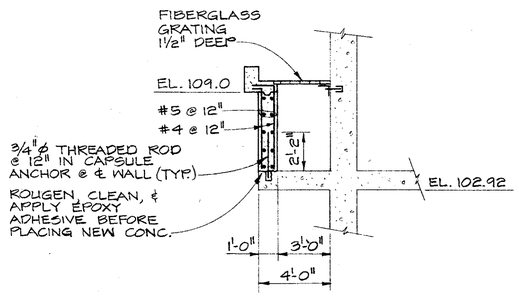

SECTION PP
SCALE: 1/4" = 1'-0" 4.5|13

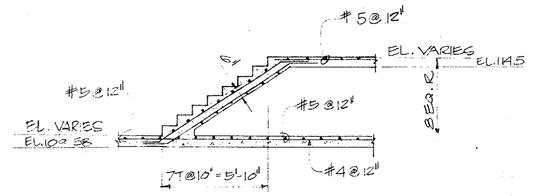

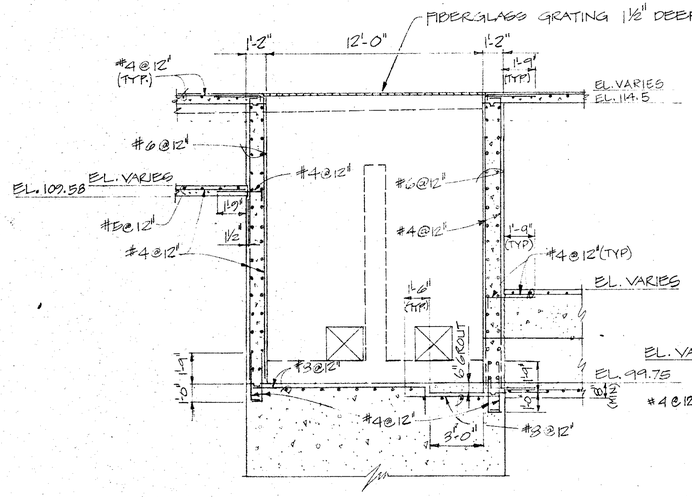

SECTION KK
SCALE: 1/4" = 1'-0" 3|13 5

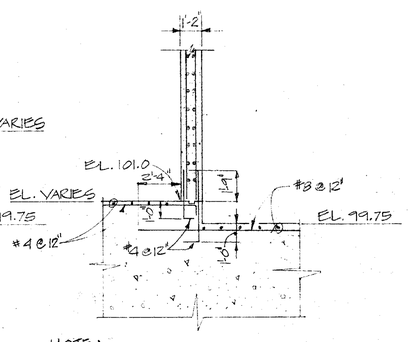

NOTE:
FOR WALL REINF. SEE SECTION H 3|9

SECTION LL
SCALE: 1/4" = 1'-0" 3|13

NOTE:
GUARDRAILS & HANDRAILS NOT SHOWN FOR CLARITY - SEE ARCH. DWGS.

Record Drawing
Those record drawings have been prepared, in part, on the basis of information compiled and furnished by others. Kennedy/Jenks/Chilton is not responsible for any errors or omissions in this document as a result of information prepared by others.
Dated APR 29, 19 82

NOTE:
ALL REINF. SHOWN SHALL BE #4@12" UNLESS OTHERWISE NOTED.

SECTION N
SCALE: 1/4" = 1'-0" 4|13 5

GRAPHIC SCALE
1/4" = 1'-0"
0 5 10

Record Drawing
RECORD DRAWING

Revised	Description	Submit.	Appr'd.	Date
2 1	CLARIFICATION CO. NO. 24			

Refer to Tracing for Latest Revision

Reference Information and Notes:

Designed S.M.D., B.M.F.S.Y.
Drawn A.Y.S., R.B.C.
Checked S.M.D.
Date 1-29-81

Wastewater Plant Improvements C-06-2464
Sausalito - Marin City Sanitary District
Kennedy/Jenks Engineers San Francisco
Submitted: Walter E. Hamman C 9370 Approved:

SECONDARY STRUCTURE
SECTIONS

Scale 1/4" = 1'-0"
Job No. 0112
Sheet S-13 of

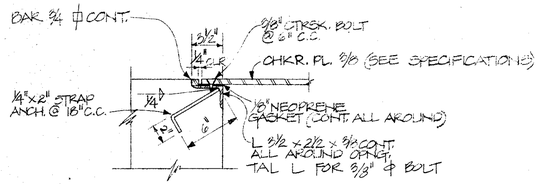

DETAIL 1 (A | 14)
SCALE: 1 1/2" = 1'-0"

BEAM SCHEDULE

MARK	SIZE		REINFORCING		STIRRUPS			REMARKS
	B	D	BOTTOM	TOP	SIZE	TYPE	SPACING	
RB-1	12	24	3-#7	3-#5 EAST SUPPORT 3-#5 WEST SUPPORT	#3	▭	8" THRUOUT	EXTEND #8 TOP BARS STRAIGHT INTO WALL @ EAST SUPPORT EXTEND #5 TOP BARS TO LAP 3'-0" W/ #8 TOP BARS
RB-2	12	28	3-#8	3-#5 EAST SUPPORT 3-#8 WEST SUPPORT	#3	▭	8" THRUOUT	EXTEND #8 TOP BARS STRAIGHT INTO WALL @ WEST SUPPORT EXTEND #5 TOP BARS TO LAP 3'-0" W/ #8 TOP BARS

⚠1 NOTE: BEAMS IN CONTROL BUILDING FLOOR OVER CHLORINE CONTACT TANKS

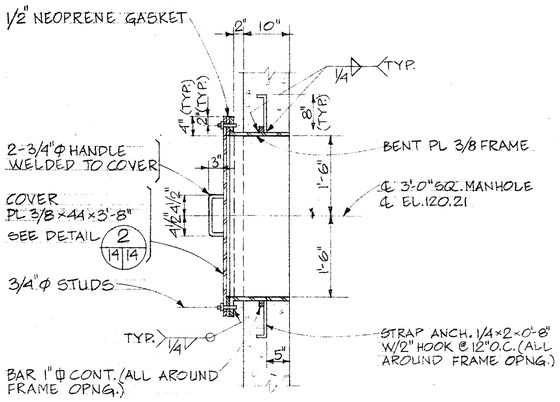

SECTION QQ (6 | 14)
SCALE: 3/4" = 1'-0"

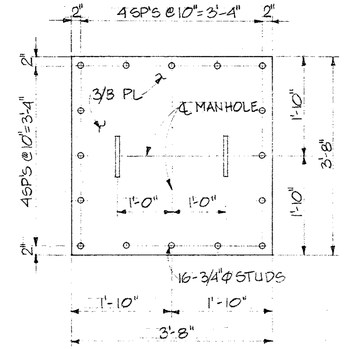

TYPICAL MANHOLE COVER DETAIL 2 (14 | 14)
SCALE: 3/4" = 1'-0"

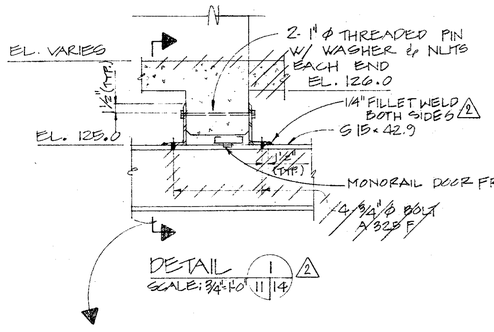

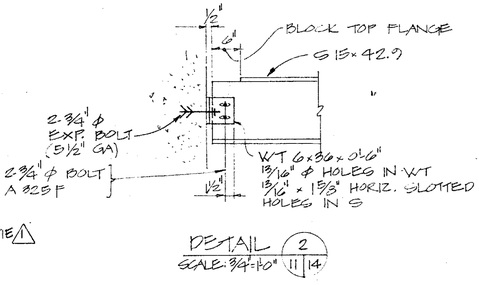

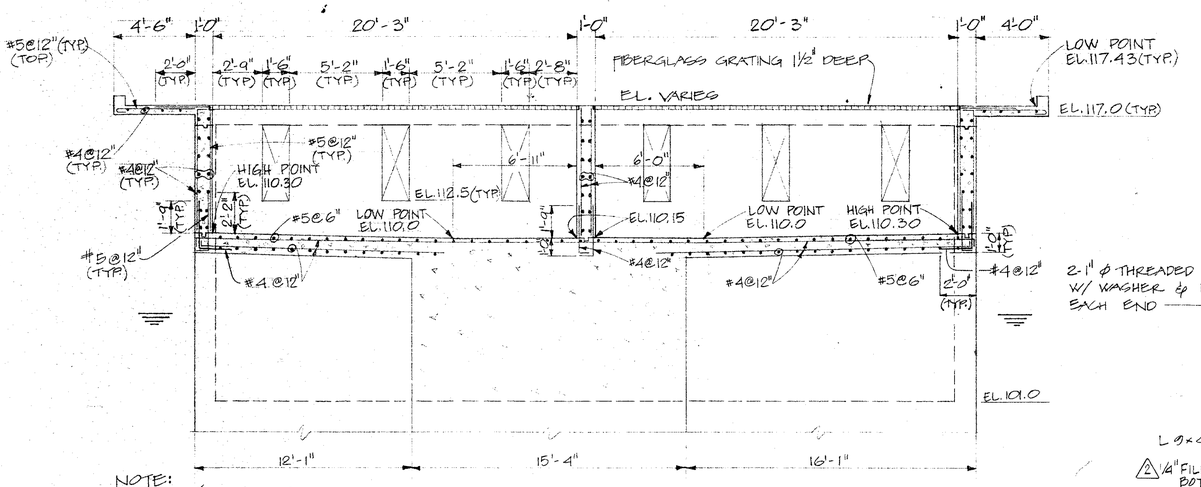

NOTE:
GUARDRAILS NOT SHOWN FOR CLARITY - SEE ARCH. & MECH. DWGS.

SECTION P (4 | 14)
SCALE: 1/4" = 1'-0"

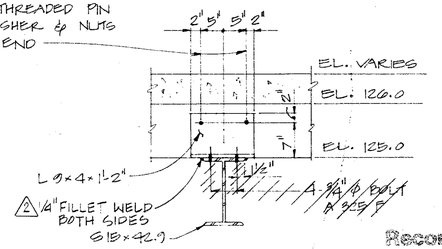

Record Drawing
These record drawings have been prepared based on the best information compiled and furnished by others. Kennedy/Jenks/Chilton is not responsible for any errors or omissions in this document as a result of information provided by others.
Dated APR. 29, 1988

GRAPHIC SCALE
1/4" = 1'-0" (0, 5, 10)
3/4" = 1'-0" (0, 1, 2, 3, 4)
1 1/2" = 1'-0" (0, 1, 2)

Revised	Description	Submit.	Appr'd.	Date
2	SUBSTITUTION			
1	CLARIFICATION			

Refer to Tracing for Latest Revision

Reference Information and Notes:

Designed: Sub, S.N.Y. PMP
Drawn: R.K., RSC
Checked: S.H.D.
Date: 1-29-81

Wastewater Plant Improvements C-06-2464
Sausalito - Marin City Sanitary District
Kennedy/Jenks Engineers — San Francisco
Submitted: [signature] Approved: [signature]

SECONDARY STRUCTURE
SECTIONS, DETAILS AND BEAM SCHEDULE

Scale: AS SHOWN
Job No.: 0112
Sheet: S-14 of

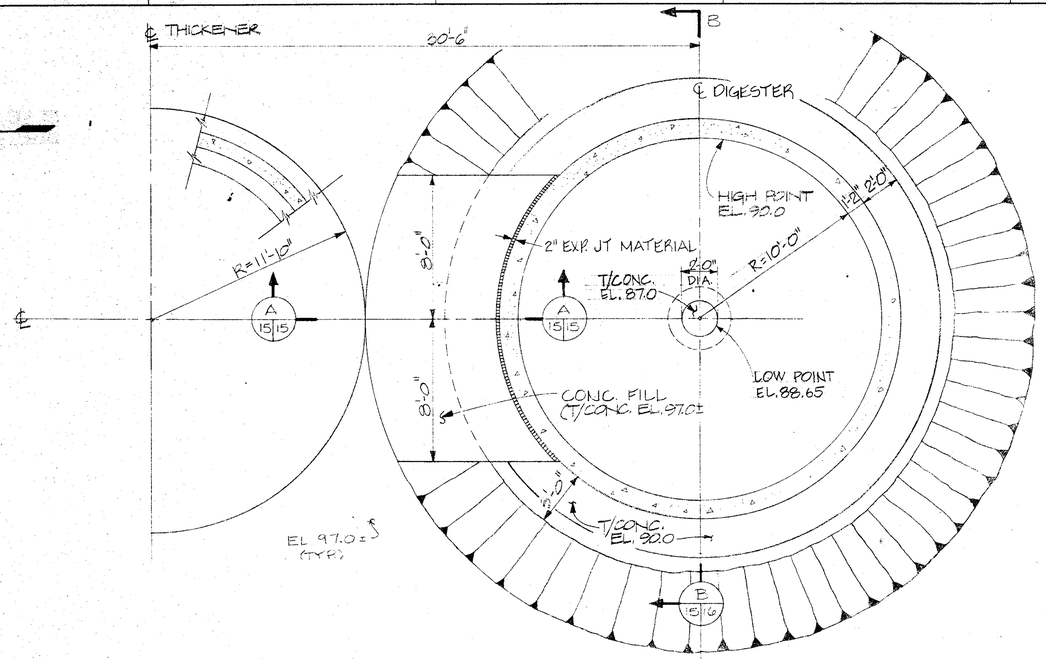

BASE PLAN
SCALE: 1/4"=1'-0"

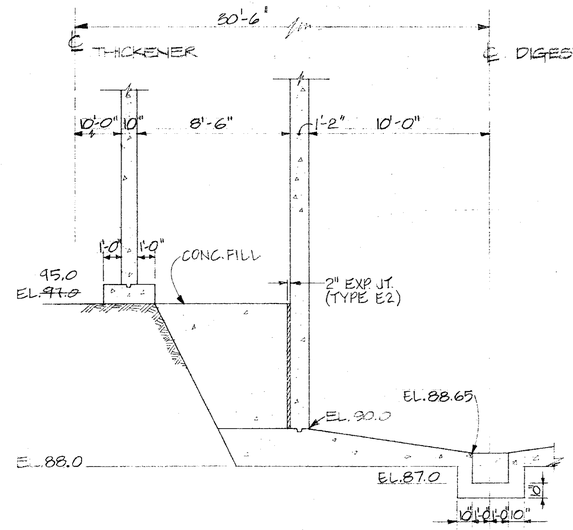

SECTION A
SCALE 1/4"=1'-0" (15|15)

NOTES:
1. CONSTRUCTION SEQUENCE
   a. BUILD DIGESTER
   b. FILL EXCAVATED AREA BETWEEN DIGESTER AND THICKENER WITH CONCRETE TO EL. 97.0 (SEE BASE PLAN)
   c. BUILD THICKENER

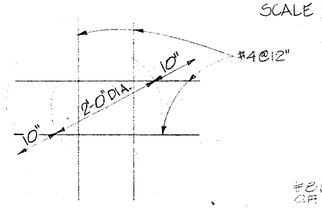

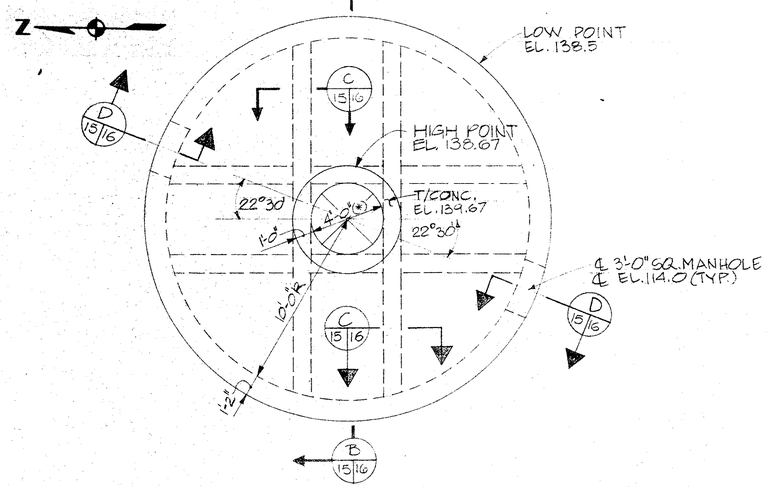

TOP PLAN
SCALE 1/4"=1'-0"

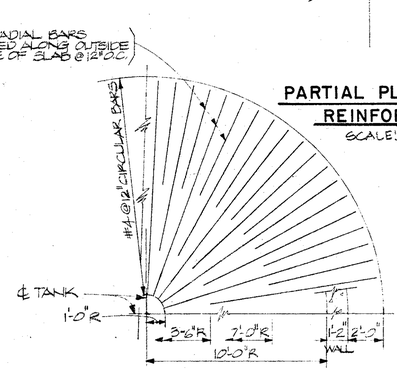

PARTIAL PLAN OF CENTER REINFORCING
SCALE: 3/4"=1'-0"

NOTES:
1. HOPPER NOT SHOWN FOR CLARITY
2. FOR HOPPER REINFORCING SEE PARTIAL PLAN OF CENTER REINFORCING & SECTION (B 15|16)

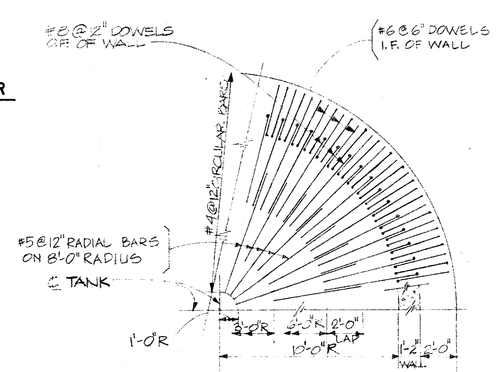

NOTES:
1. HOPPER NOT SHOWN FOR CLARITY
2. FOR HOPPER REINFORCING SEE PARTIAL PLAN OF CENTER REINFORCING & SECTION (B 15|16)

PARTIAL PLAN OF TOP REINFORCING
SCALE: 1/4"=1'-0"

PARTIAL PLAN OF BOTTOM REINFORCING
SCALE: 1/4"=1'-0"

GRAPHIC SCALE
1/4"=1'-0" 0 5 10
3/4"=1'-0" 0 1 2 3 4

Record Drawing
These record drawings have been prepared, in part, on the basis of information compiled and furnished by others. Kennedy/Jenks/Chilton is not responsible for any errors or omissions in the document as a result of information provided by others.
Dated APR. 29, 19 88

Record Drawing

Revised	Description	Submit.	Appr'd.	Date
Refer to Tracing for Latest Revision				

Reference Information and Notes:

Designed: S.H.D. SWY
Drawn: AYC
Checked: S.H.D.
Date: 1-29-81

Wastewater Plant Improvements C-06-2464
Sausalito-Marin City Sanitary District
Kennedy/Jenks Engineers San Francisco
Submitted: C3270 Approved:

PRIMARY DIGESTER PLANS AND SECTION

Scale: AS SHOWN
Job No.: 0112
Sheet: S-15 of

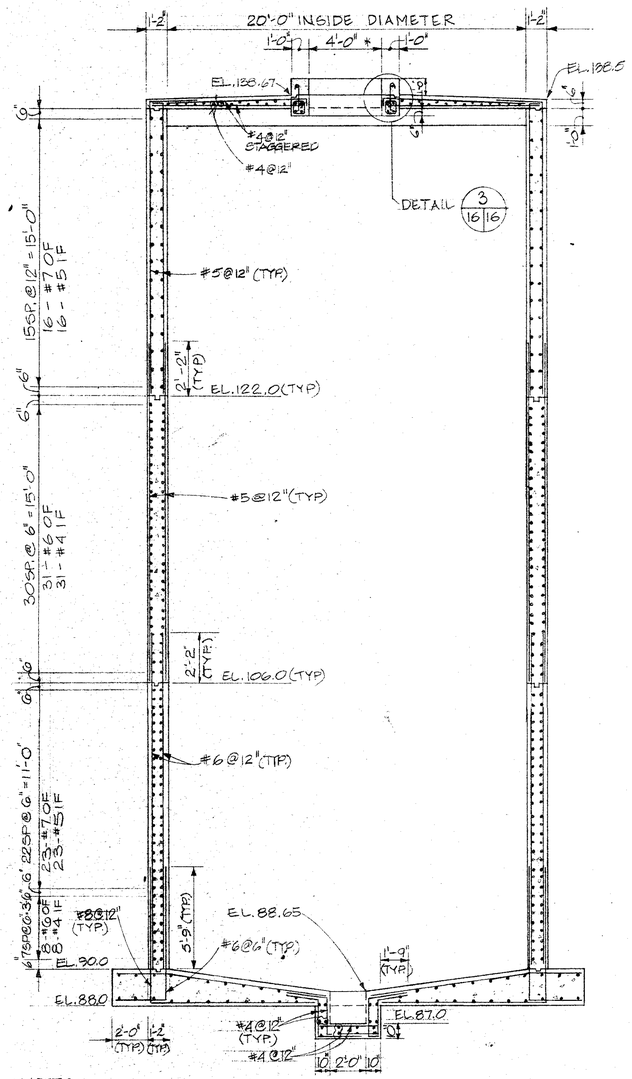

NOTES:
1. FOR BASE SLAB REINF. SEE PARTIAL PLANS ON S-15
2. STAGGER SPLICES OF WALL HORIZ. BARS. LAP 1.7 ℓd AT SPLICES. SEE SHEET S-2
3. ACCESS PLATFORM NOT SHOWN FOR CLARITY
4. HORIZ. REINF. SHOWN IS TYPICAL FOR TANK WALL

SECTION B/15|16
SCALE: 1/4" = 1'-0"

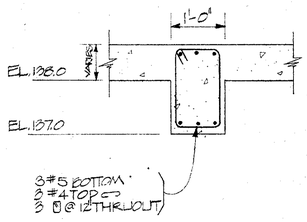

SECTION C/15|16
SCALE: 3/4" = 1'-0"

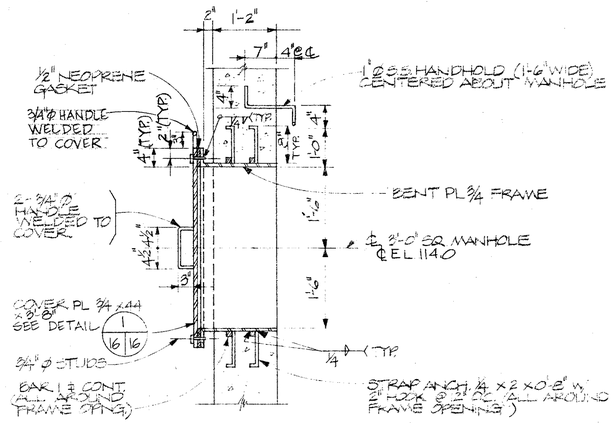

SECTION D/15|16
SCALE: 3/4" = 1'-0"

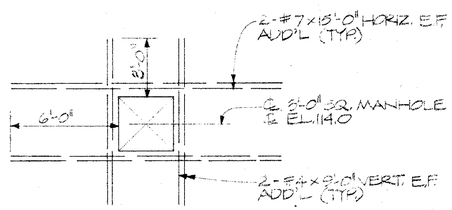

ADDITIONAL REINFORCING AT MANHOLE

DETAIL 2/16|16
SCALE: 1/4" = 1'-0"

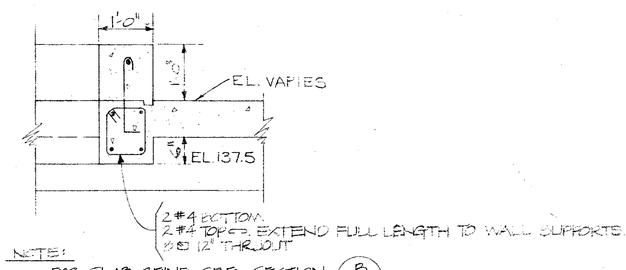

NOTE:
FOR SLAB REINF. SEE SECTION B/15|16

DETAIL 3/16|16
SCALE: 3/4" = 1'-0"

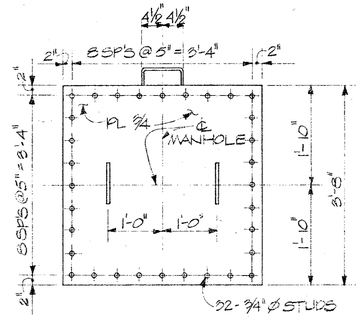

TYPICAL MANHOLE COVER DETAIL 1/16|16
(TWO MANHOLES REQ'D)
SCALE: 3/4" = 1'-0"

Record Drawing
These record drawings have been prepared, in part, on the basis of information compiled and furnished by others. Kennedy/Jenks/Chilton is not responsible for any errors or omissions in this document as a result of information provided by others.
Dated APR. 29, 19 88

GRAPHIC SCALE
1/4" = 1'-0" 0 5 10
3/4" = 1'-0" 0 1 2 3 4

Revised	Description	Submit.	Appr'd.	Date

Refer to Tracing for Latest Revision

Reference Information and Notes:

Designed SH, DSWY
Drawn AYS
Checked SHD
Date 1-29-81

Wastewater Plant Improvements C-06-2464
Sausalito - Marin City Sanitary District
Kennedy/Jenks Engineers San Francisco
Submitted: Walter E. Hamman C9370
Approved: Robert J. Ames

PRIMARY DIGESTER
SECTIONS AND DETAILS

Scale AS SHOWN
Job No. 0112
Sheet S-16 of

75

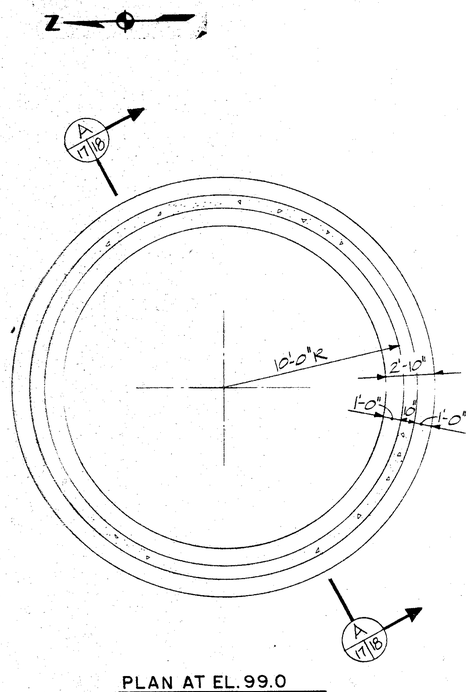

PLAN AT EL. 99.0
SCALE: 1/4"=1'-0"

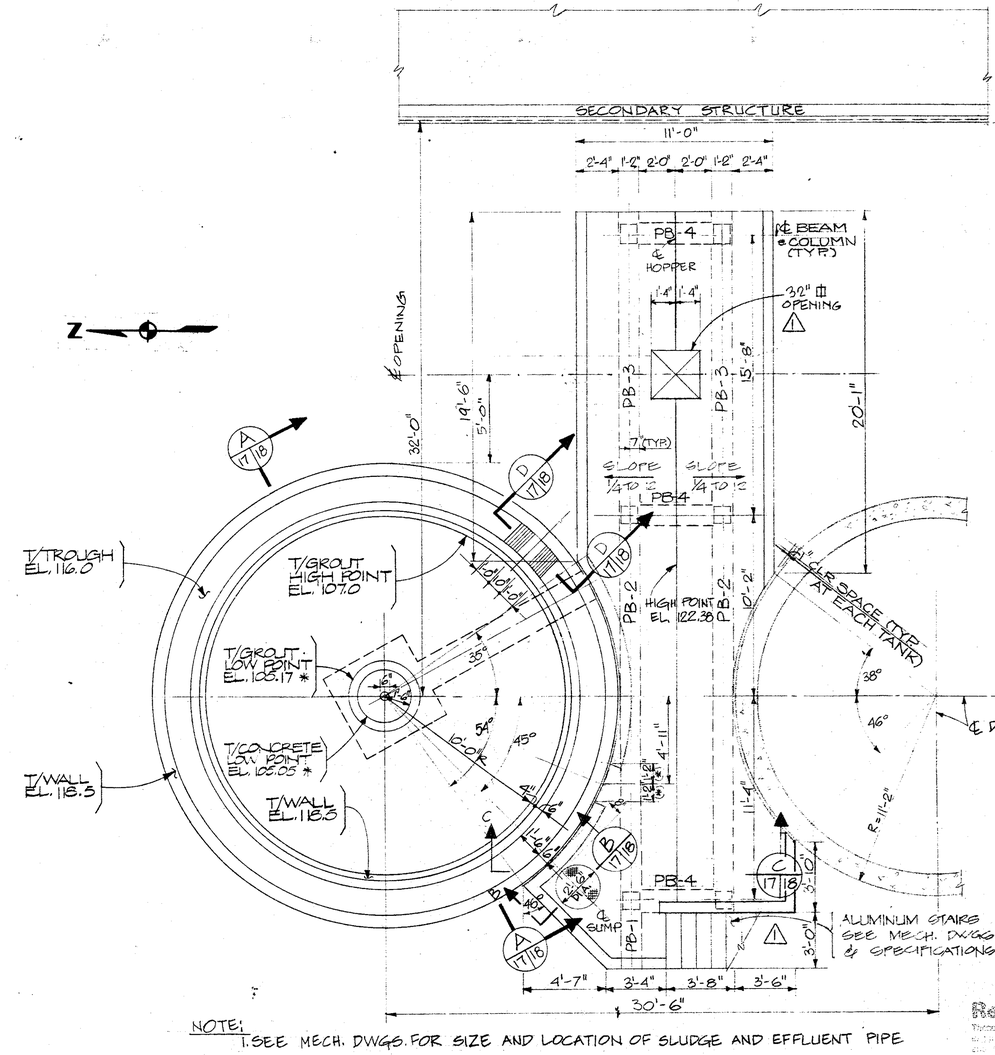

NOTE:
1. SEE MECH. DWGS. FOR SIZE AND LOCATION OF SLUDGE AND EFFLUENT PIPE

TOP PLAN
SCALE: 1/4"=1'-0"

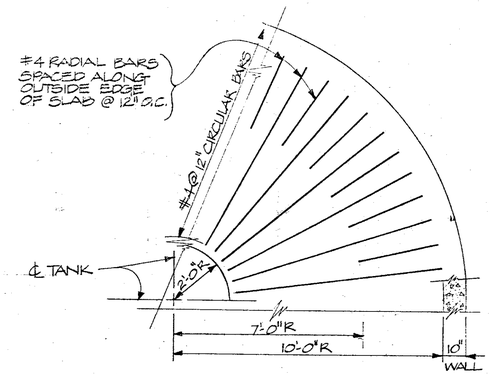

NOTES:
1. HOPPER NOT SHOWN FOR CLARITY
2. FOR HOPPER REINF. SEE SECTION A 17/18

PARTIAL PLAN OF TOP REINFORCING
SCALE: 3/8"=1'-0"

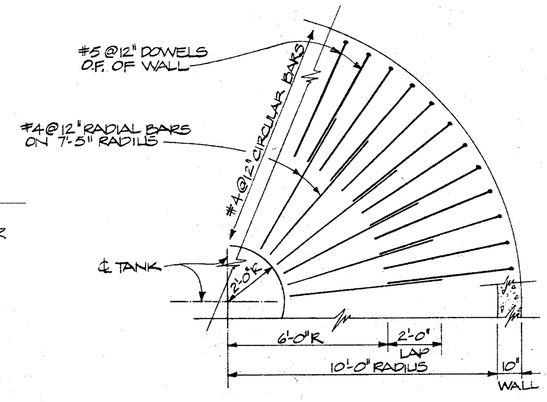

NOTES:
1. HOPPER NOT SHOWN FOR CLARITY
2. FOR HOPPER REINF. SEE SECTION A 17/18

PARTIAL PLAN OF BOTTOM REINFORCING
SCALE: 3/8"=1'-0"

GRAPHIC SCALE
1/4"=1'-0" 0 5 10
3/8"=1'-0" 0 5 10

Record Drawing
These plans have been prepared, but not controlled by, Kennedy/Jenks. Changes or additions to this document as a result of information received by others Dated APR. 29, 19 88

RECORD DRAWING

Revised	Description	Submit.	Appr'd.	Date
1	FIELD CHANGE			

Refer to Tracing for Latest Revision

Reference Information and Notes:

Record Drawing
These plans have been prepared, but not controlled by, Kennedy/Jenks. Changes or additions to this document as a result of information received by others Dated ____, 19__

Designed: S.D., S.N.Y.
Drawn: B.K.
Checked: S.D.
Date: 1-29-81

Wastewater Plant Improvements C-06-2464
Sausalito - Marin City Sanitary District
Kennedy/Jenks Engineers San Francisco
Submitted: Walter E. Hamman C9370 Approved: Fred J. Conley

THICKENER PLANS

Scale: AS SHOWN
Job No. 0112
Sheet S-17 of

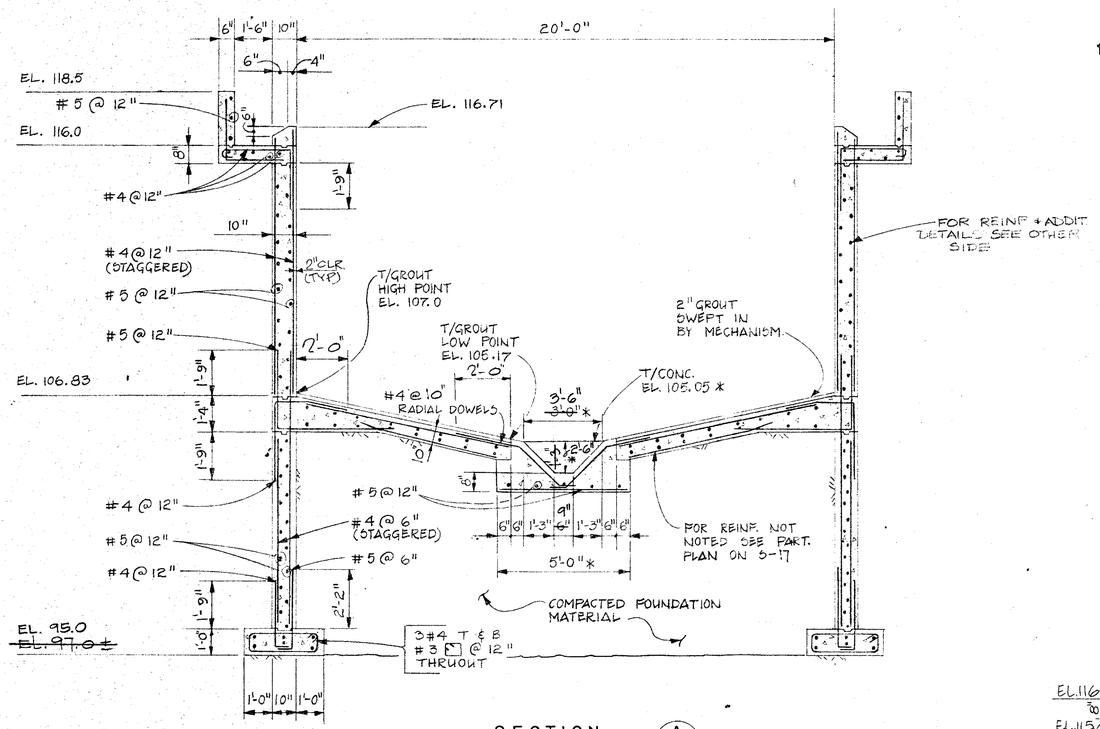

SECTION A 17|18
SCALE: 3/8" = 1'-0"

NOTE: STAGGER SPLICES. LAP 1'-9" FOR #4 BARS; 2'-2" FOR # 5 BARS AT SPLICE.

BEAM SCHEDULE

MARK	SIZE		REINFORCING		STIRRUPS			REMARKS
	B	D	BOTTOM	TOP	SIZE	TYPE	SPACING	
PB-1	14	28	SEE PB-2	SEE PB-2	#3	⊠	6" THRUOUT	
PB-2	14	28	4 - #5	2-#6 CONT.	#3	⊠	6" THRUOUT	EXTEND #6 BARS FULL LENGTH INTO PB-1 & END IN HOOK. EXTEND #5 BARS FULL LENGTH INTO PB-1
PB-3	14	28	4 - #5	2-#6 CONT.	#3	⊠	6" THRUOUT	EXTEND BARS FULL LENGTH INTO EAST ADJACENT SPAN; HOOK TOP BARS AT EAST END
PB-4	14	28	4 - #5	2-#6 CONT.	#3	⊠	6" THRUOUT	

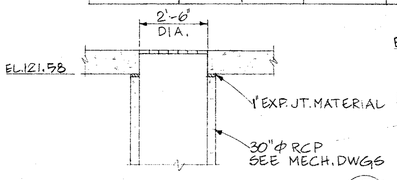

NOTE: FOR SLAB REINF. SEE SECTION C 17|18

SECTION B 17|18
SCALE: 3/8" = 1'-0"

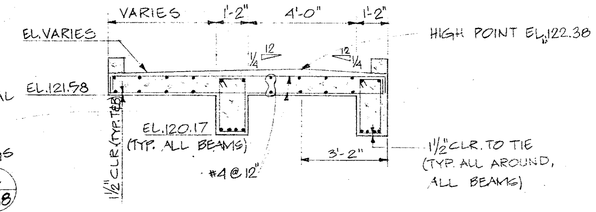

SECTION C 17|18
SCALE: 3/8" = 1'-0"

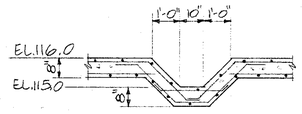

NOTE: ALL REINF. SHOWN TO BE #4 @ 12"

SECTION D 17|18
SCALE: 3/8" = 1'-0"

Record Drawing
These record drawings have been prepared in part on the basis of information compiled and furnished by others. Kennedy/Jenks/Chilton is not responsible for any errors or omissions in this document as a result of information provided by others.
Date: APR. 29 '88

GRAPHIC SCALE
3/8" = 1'-0" 0 5 10

Revised	Description	Submit.	Appr'd.	Date

Refer to Tracing for Latest Revision

Reference Information and Notes:

Designed: Sh. D, S.W.Y.
Drawn: I.H. AYS
Checked: Sh. D.
Date: 1-29-81

Wastewater Plant Improvements C-06-2464
Sausalito - Marin City Sanitary District
Kennedy/Jenks Engineers San Francisco
Submitted: Walter Hansma C9370
Approved: Robert J. Owen

THICKENER
SECTIONS AND BEAM SCHEDULE

Scale: 3/8" = 1'-0"
Job No. 0112
Sheet S-18 of

77

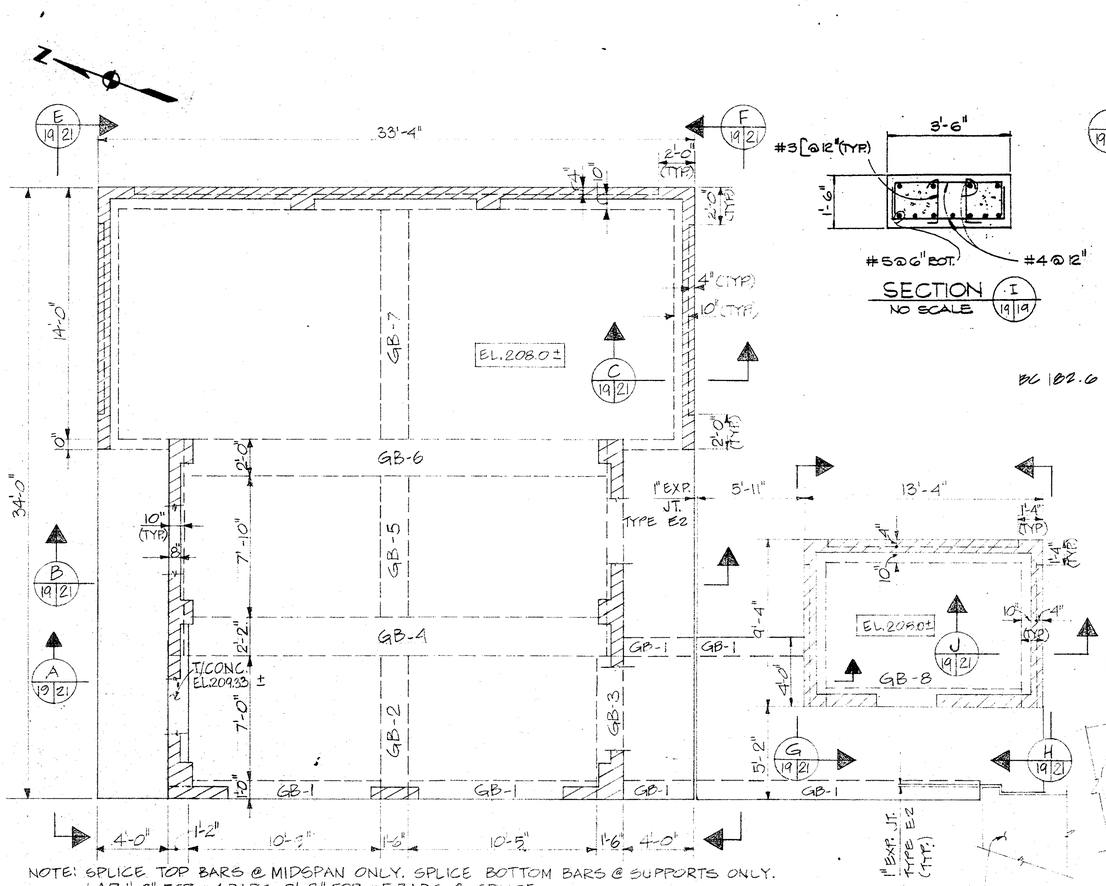

NOTE: SPLICE TOP BARS @ MIDSPAN ONLY. SPLICE BOTTOM BARS @ SUPPORTS ONLY. LAP 1'-9" FOR #4 BARS, 2'-2" FOR #5 BARS & SPLICE.

GRADE FLOOR PLAN

SCALE: 1/4" = 1'-0"

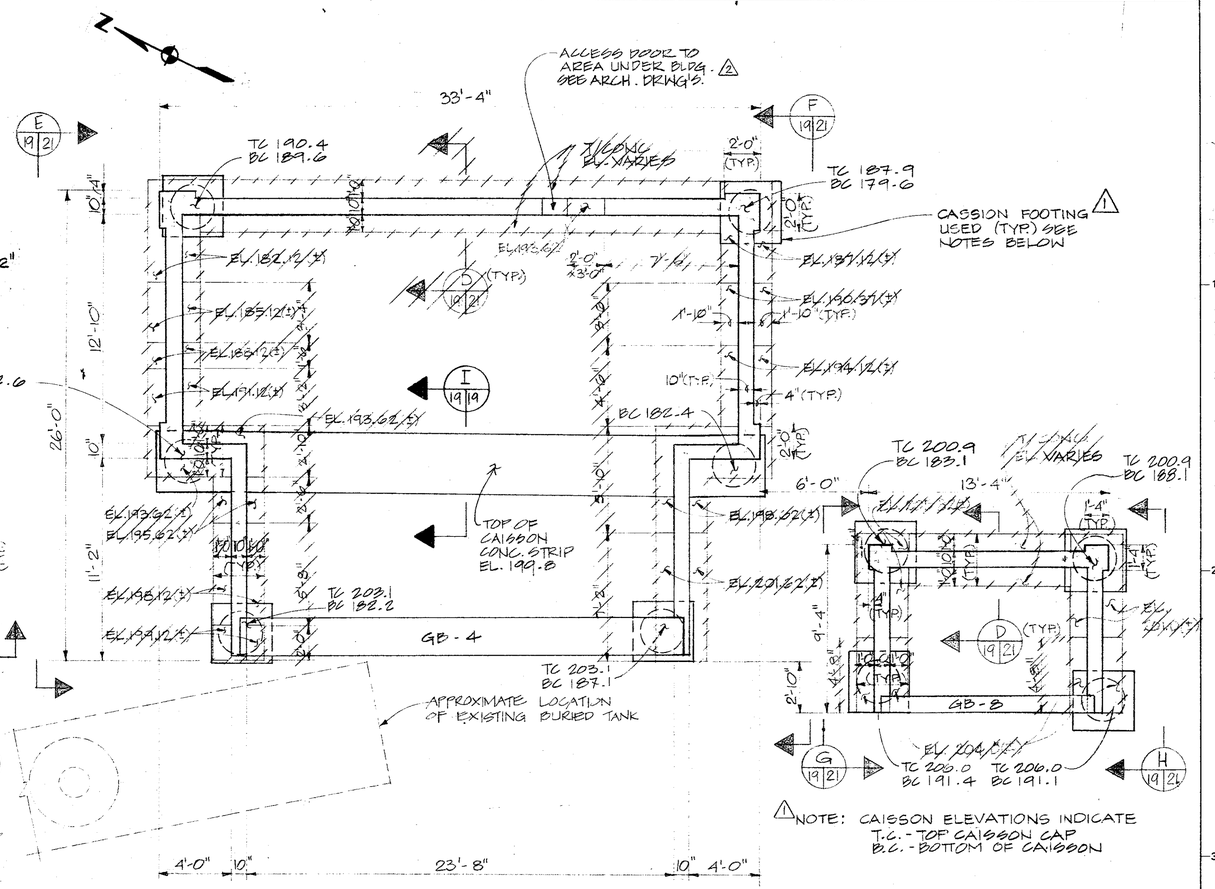

⚠1 NOTE: CAISSON ELEVATIONS INDICATE T.C. - TOP CAISSON CAP B.C. - BOTTOM OF CAISSON

FOUNDATION PLAN

SCALE: 1/4" = 1'-0"

BEAM SCHEDULE

MARK	SIZE		REINFORCING		STIRRUPS			REMARKS
	B	D	BOTTOM	TOP	SIZE	TYPE	SPACING	
GB-1	12	24+	3-#5	2-#5 CONT.	3	▯	8" THRUOUT	BEAM SHALL BE POUNDED 1'-6" BELOW GRADE
GB-2	18	38	3-#7	5-#7 CONT.	4	▯	10" THRUOUT	EXTEND TOP BARS 5'-3" INTO GB-5
GB-3	18	38	4-#6	9-#7 (5+4) CONT.	4	▯	10" THRUOUT	EXTEND TOP BARS 2'-0" BEYOND FACE OF EAST SUPPORT & HOOK THEM @ BOTH ENDS
GB-4	26	50	12-#9 (6+6)	5-#8 CONT.	4	▯	6" THRUOUT	PROVIDE #4 @ 12" ALONG EACH VERT. FACE OF BEAM
GB-5	18	38	3-#7	5-#7 CONT.	4	▯	10" THRUOUT	EXTEND TOP BARS 5'-3" INTO GB-2 & GB-7
GB-6	24	42	8-#9 (6+2)	6-#6 CONT.	4	▯	8" THRUOUT	PROVIDE #4 @ 12" ALONG EACH VERT. FACE OF BEAM
GB-7	18	24	4-#7	3-#6 CONT.	4	▯	10" THRUOUT	START TOP BARS @ FACE OF WEST SUPPORT
GB-8	12	24	2-#5	2-#5 CONT.	3	▯	8" THRUOUT	

⚠1 CAISSON NOTES:

1. ALL CAISSONS SHALL BE 30" DIA. REINF CONC, W/ 19-#11, #3 SPIRALS @ 2½" PITCH
2. ESTIMATED LENGTH OF CAISSONS SHALL BE 30 FEET UNLESS NOTED OTHERWISE.
3. CAISSONS SHALL BEAR ON UNDISTURBED BEDROCK AS DETERMINED BY THE GEOTECHNICAL ENGINEER.
4. "CCO" = CAISSON CUTOFF
5. FOR ADDITIONAL DETAILS, SEE CONTRACT DOCUMENTS

GENERAL NOTE:

GRADE FLOOR EL. OF CHLORINE STORAGE BUILDING & SAFETY EQUIPMENT BUILDING SHALL MATCH GRADE FLOOR EL. OF SO_2 STORAGE BUILDING. ROOF ELEVATIONS OF THE NEW STRUCTURES ARE SHOWN FOR REFERENCE ONLY & SHALL BE ADJUSTED ACCORDINGLY.

Record Drawing
These record drawings have been prepared, in part, on the basis of information compiled and furnished by others. Kennedy/Jenks/Chilton is not responsible for any errors or omissions in this document as a result of information provided by others.
Date APR. 29, 1982

GRAPHIC SCALE
1/4" = 1'-0" 0 5 10

Revised	Description	Submit.	Appr'd.	Date
⚠2	CO NO. 9			
⚠1	CO NO. 4			

Refer to Tracing for Latest Revision

Reference Information and Notes:

Designed S.H.D., SKW
Drawn R.K.
Checked S.H.D.
Date 1-29-81

Wastewater Plant Improvements C-06-2464
Sausalito - Marin City Sanitary District

Kennedy Jenks Engineers — San Francisco

Submitted: Walter S. Kamma C 9370 — Approved: Robert J. Cheney

CHLORINE STORAGE BUILDING AND SAFETY EQUIPMENT BUILDING

FOUNDATION AND GRADE FLOOR PLANS, BEAM SCHEDULE

Scale 1/4" = 1'-0"
Job No. 0112
Sheet S-19 of

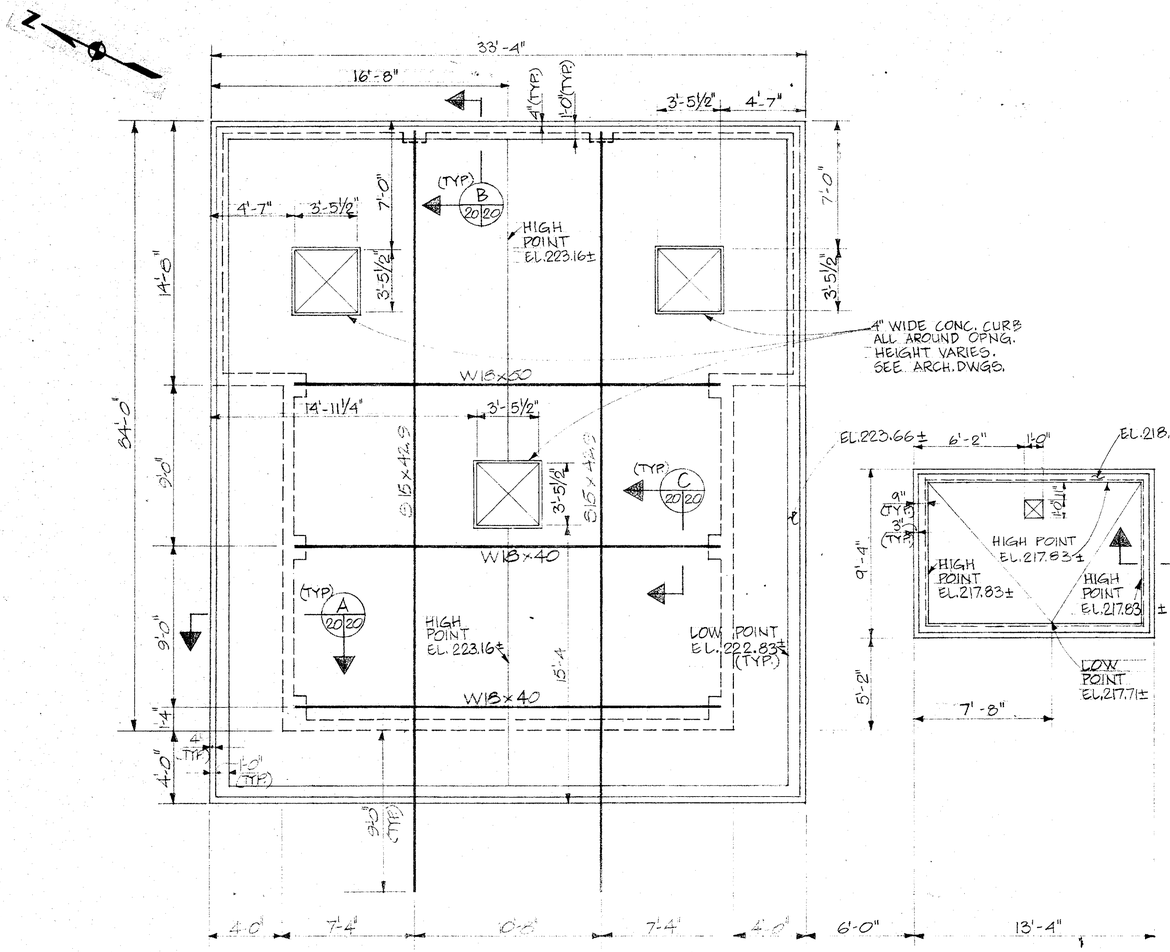

NOTE: SPLICE TOP BARS @ MIDSPAN ONLY, SPLICE BOTTOM BARS @ SUPPORTS ONLY.
LAP 1'-9" FOR #4 BARS, 2'-2" FOR #5 BARS & SPLICE.

ROOF PLANS
SCALE: 1/4" = 1'-0"

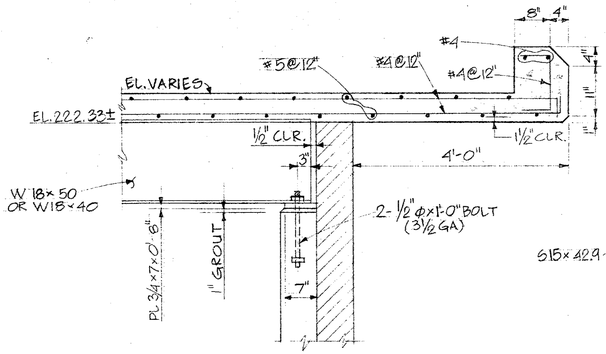

SECTION A
SCALE: 3/4" = 1'-0"
20/20

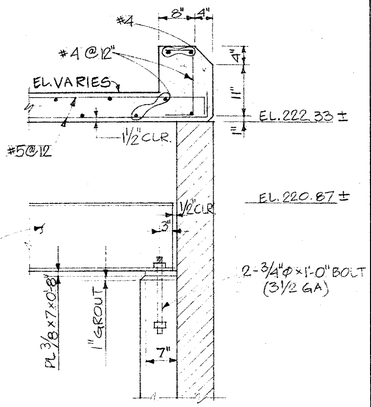

SECTION B
SCALE: 3/4" = 1'-0"
20/20

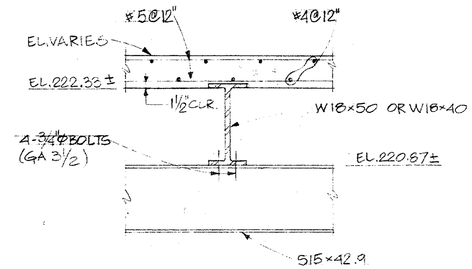

SECTION C
SCALE: 3/4" = 1'-0"
20/20

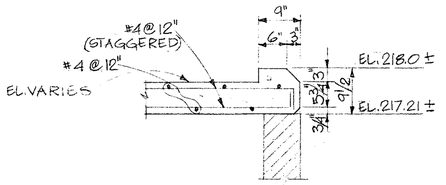

SECTION D
SCALE: 3/4" = 1'-0"
20/20

GENERAL NOTE:

GRADE FLOOR EL. OF CHLORINE STORAGE BUILDING & SAFETY EQUIPMENT BUILDING SHALL MATCH GRADE FLOOR EL. OF SO_2 STORAGE BUILDING. ROOF ELEVATIONS OF THE NEW STRUCTURES ARE SHOWN FOR REFERENCE ONLY & SHALL BE ADJUSTED ACCORDINGLY.

Record Drawing
These record drawings have been prepared, in part, on the basis of information compiled and furnished by others. Kennedy/Jenks/Chilton is not responsible for any errors or omissions in this document as a result of information provided by others.
Dated ASB-23, 19 82

GRAPHIC SCALE
1/4" = 1'-0" 0 5 10
3/4" = 1'-0" 0 1 2 3 4

Revised	Description	Submit.	Appr'd.	Date
Refer to Tracing for Latest Revision				

Reference Information and Notes:

Designed: S.H.D., S.W.Y.
Drawn: R.K.
Checked: S.H.D.
Date: 1-29-81

Wastewater Plant Improvements C-06-2464
Sausalito - Marin City Sanitary District
Kennedy/Jenks Engineers San Francisco
Submitted: Walter Hamma C9370
Approved: Robert J. Brown

CHLORINE STORAGE BUILDING AND SAFETY EQUIPMENT BUILDING
ROOF PLANS, SECTIONS

Scale: AS SHOWN
Job No. 0112
Sheet S-20 of

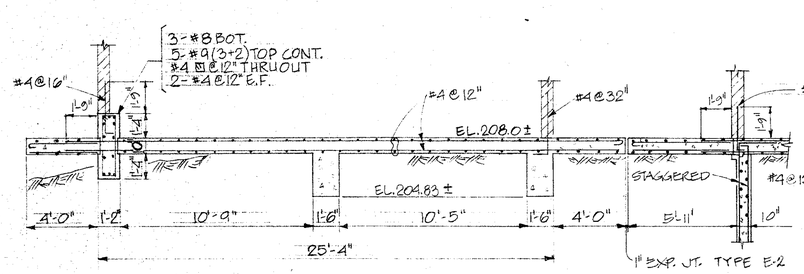

NOTES: 1. FOR BEAM REINFORCING, SEE PLANS & BEAM SCHEDULE ON S-19
2. FOR MASONRY REINF. SEE ARCH. DWGS.
3. ALL REINF. SHOWN SHALL BE #4 @ 12" UNLESS OTHERWISE NOTED.

SECTION A (19|21)
SCALE: 1/4"=1'-0"

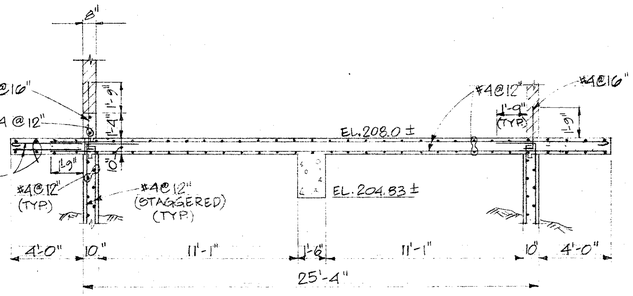

NOTES: 1. FOR BEAM REINFORCING SEE PLANS & BEAM SCHEDULE ON S-19
2. FOR MASONRY REINFORCING SEE ARCH. DWGS.

SECTION B (19|21)
SCALE: 1/4"=1'-0"

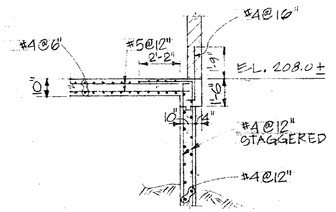

NOTE: FOR MASONRY REINFORCING SEE ARCH. DWGS.

SECTION C (19|21)
SCALE: 1/4"=1'-0"

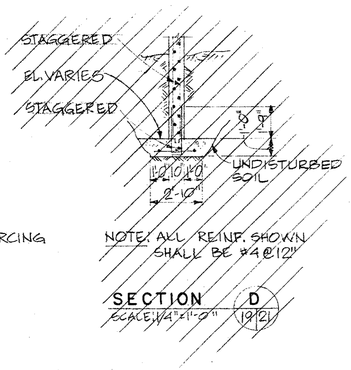

NOTE: ALL REINF. SHOWN SHALL BE #4@12"

SECTION D (19|21)
SCALE: 1/4"=1'-0"

NOTE: BUILDING FOUNDATION SHALL BE AT LEAST 3'-0" INTO BASALT.

SECTION E (19|21)
SCALE: 1/8"=1'-0"

NOTE: BUILDING FOUNDATION SHALL BE AT LEAST 3'-0" INTO BASALT.

SECTION F (19|21)
SCALE: 1/8"=1'-0"

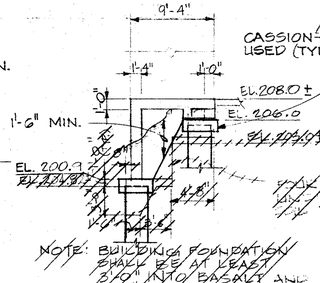

NOTE: BUILDING FOUNDATION SHALL BE AT LEAST 3'-0" INTO BASALT AND 1'-0" BELOW GRADE.

SECTION G (19|21)
SCALE: 1/8"=1'-0"

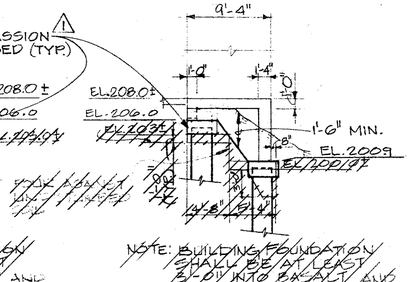

NOTE: BUILDING FOUNDATION SHALL BE AT LEAST 3'-0" INTO BASALT AND 1'-0" BELOW GRADE.

SECTION H (19|21)
SCALE: 1/8"=1'-0"

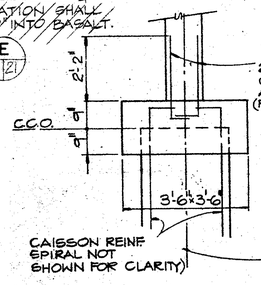

TYPICAL CAISSON CAP DETAIL
SCALE: 1/2"=1'-0"

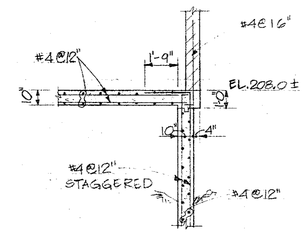

NOTE: FOR MASONRY REINFORCING SEE ARCH. DWGS

SECTION J (19|21)
SCALE: 1/4"=1'-0"

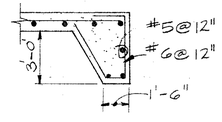

TYPICAL FOOTING KEY DETAIL
SCALE: 1/4"=1'-0"

Record Drawing
Your record drawing has been prepared, in part, on the basis of information compiled and furnished by others. Kennedy/Jenks/Chilton is not responsible for any errors or omissions in this document as a result of information provided by others.
Dated APR. 29, 19 88.

GRAPHIC SCALE
1/8"=1'-0" 0 5 10 15 20 25
1/4"=1'-0" 0 5 10

Revised	Description	Submit.	Appr'd.	Date
1	CO NO. 4			

Refer to Tracing for Latest Revision

Reference Information and Notes:

Record Drawing
This record drawing has been prepared, in part, on the basis of information compiled and furnished by others. Kennedy/Jenks/Chilton is not responsible for any errors or omissions in this document as a result of information provided by others.
Dated ____, 19__.

Designed S.W.D., S.W.Y.
Drawn R.K.
Checked S.J.
Date 1-29-81

Wastewater Plant Improvements C-06-2464
Sausalito - Marin City Sanitary District
Kennedy/Jenks Engineers San Francisco
Submitted: Approved:
C.E. 8370

CHLORINE STORAGE BUILDING AND SAFETY EQUPMENT BUILDING
SECTIONS

Scale AS SHOWN
Job No. 0112
Sheet S-21 of

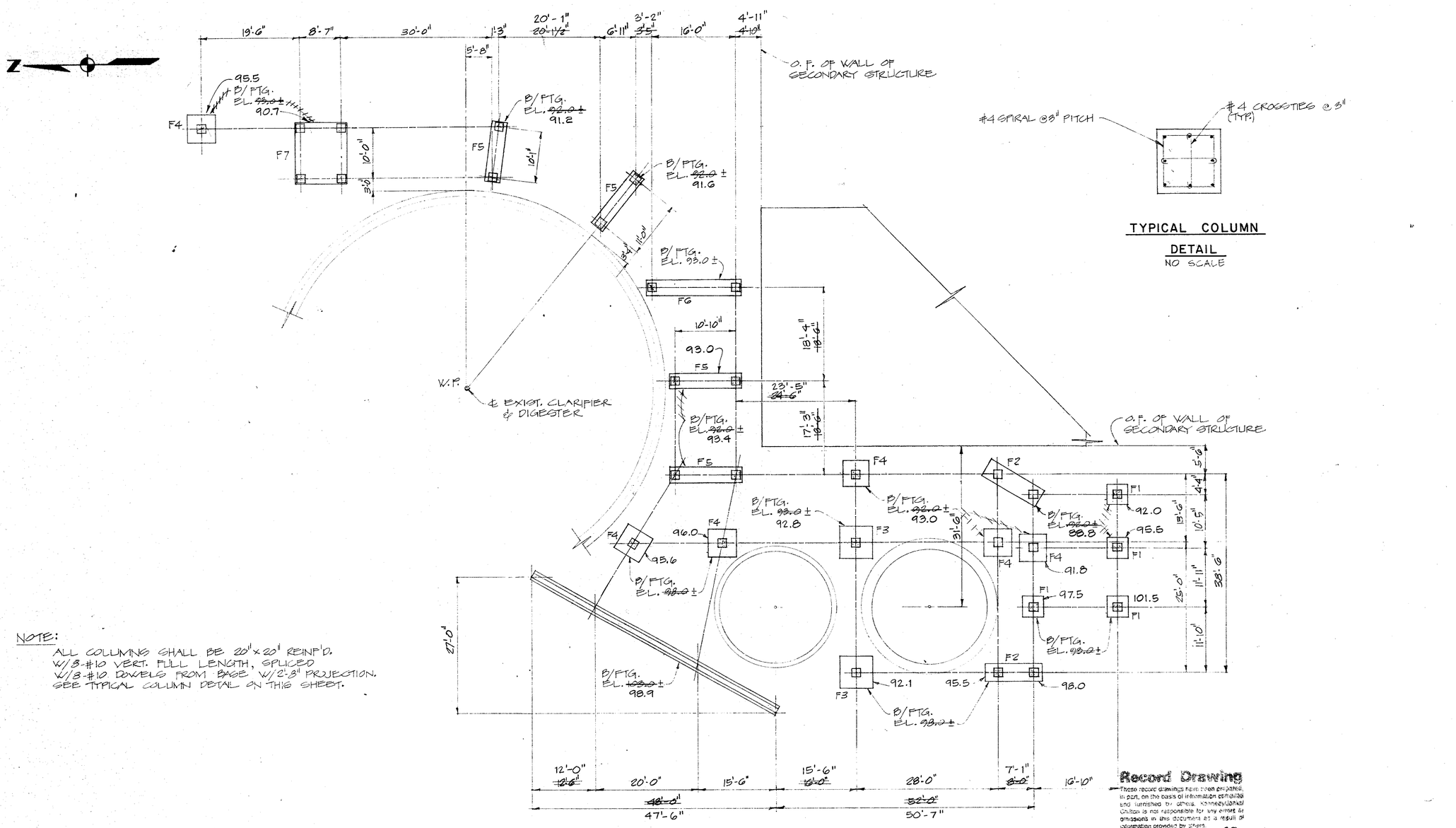

TYPICAL COLUMN DETAIL
NO SCALE

NOTE:
ALL COLUMNS SHALL BE 20"x20" REINF'D.
W/8-#10 VERT. FULL LENGTH, SPLICED
W/8-#10 DOWELS FROM BASE W/2'-8" PROJECTION.
SEE TYPICAL COLUMN DETAIL ON THIS SHEET.

FOUNDATION PLAN
SCALE: 1"=10'-0"

Record Drawing
These record drawings have been prepared, in part, on the basis of information compiled and furnished by others. Kennedy/Jenks/Chilton is not responsible for any errors or omissions in this document as a result of information provided by others.
Dated APR. 29, 1988

GRAPHIC SCALE
1" = 10'
0 5 10 15 20 25

Revised	Description	Submit.	Appr'd.	Date

Refer to Tracing for Latest Revision

Reference Information and Notes:

Designed: SH.D., BMF
Drawn: RBC
Checked: SH.D.
Date: 1-29-81

Wastewater Plant Improvements C-06-2464
Sausalito - Marin City Sanitary District
Kennedy/Jenks Engineers San Francisco
Submitted: Walter Hanman C9370
Approved: Robert J. Owen

ACCESS PLATFORM AND GENERATOR BUILDING
FOUNDATION PLAN, DETAIL

Scale: 1"=10'-0"
Job No. 0112
Sheet S-22 of

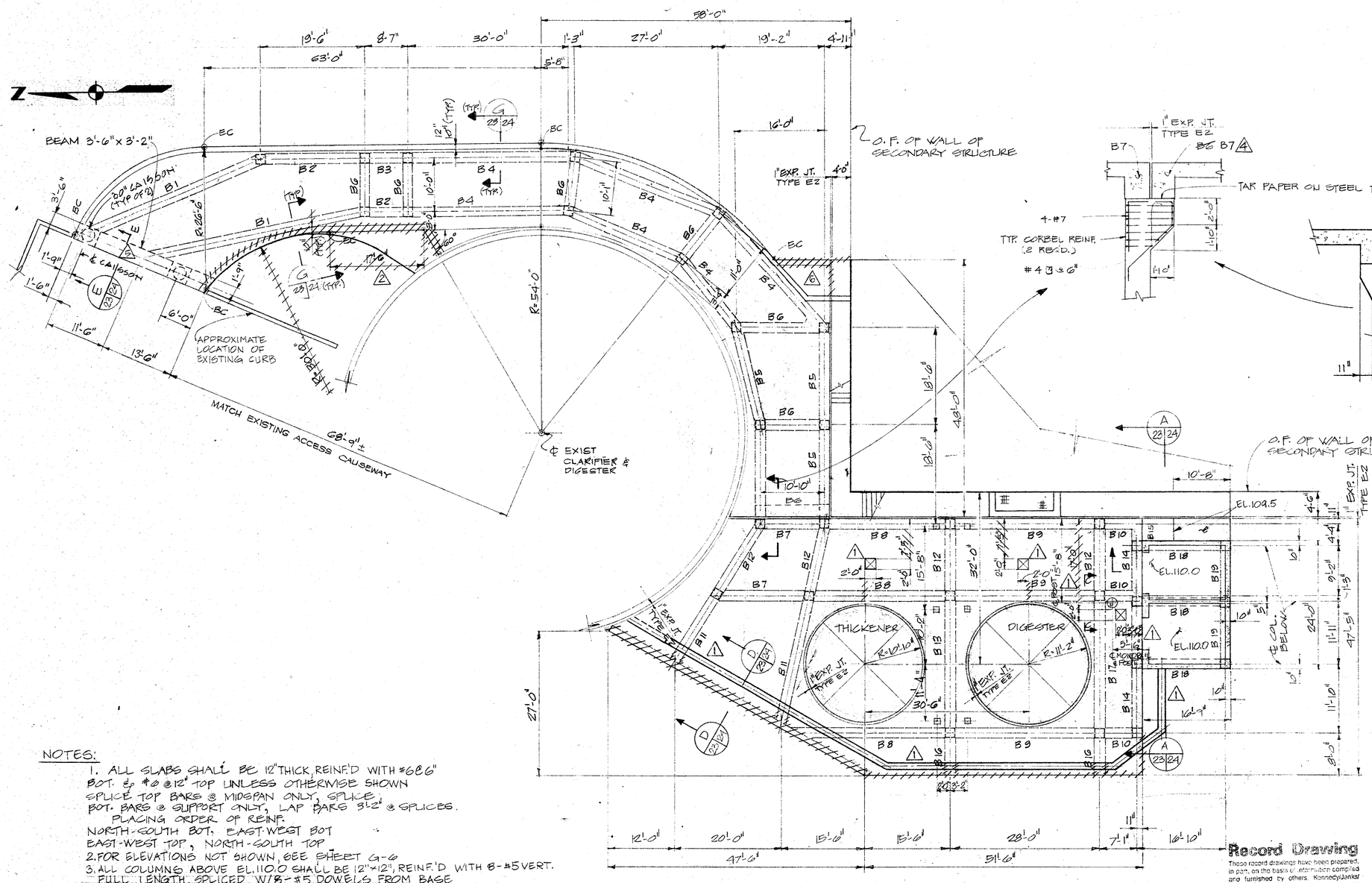

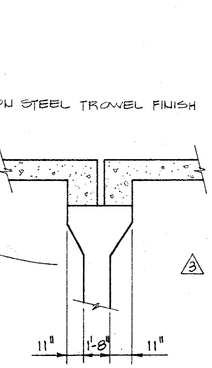

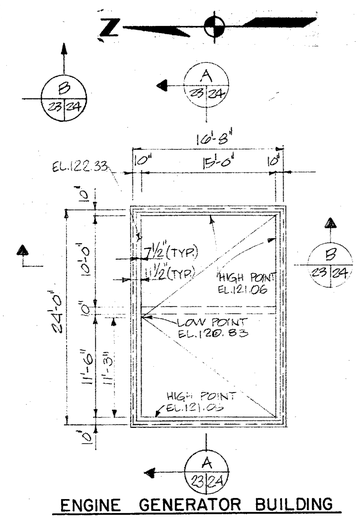

ENGINE GENERATOR BUILDING

ROOF PLAN

SCALE: 1/8" = 1'-0"

NOTES:

1. ALL SLABS SHALL BE 12" THICK, REINF'D WITH #6 @ 6" BOT. & #6 @ 12" TOP UNLESS OTHERWISE SHOWN
SPLICE TOP BARS @ MIDSPAN ONLY, SPLICE BOT. BARS @ SUPPORT ONLY, LAP BARS 3'-2" @ SPLICES.
PLACING ORDER OF REINF.
NORTH-SOUTH BOT, EAST-WEST BOT
EAST-WEST TOP, NORTH-SOUTH TOP
2. FOR ELEVATIONS NOT SHOWN, SEE SHEET G-6
3. ALL COLUMNS ABOVE EL.110.0 SHALL BE 12"×12", REINF'D WITH 8-#5 VERT. FULL LENGTH, SPLICED W/8-#5 DOWELS FROM BASE W/1'-7" PROJECTION, UNLESS OTHERWISE SHOWN. SEE TYPICAL COLUMN DETAIL ON SHEET S-22
4. GUARDRAILS NOT SHOWN FOR CLARITY - SEE ARCH. DWGS.
5. FOR DETAILS AT OPNGS. SEE SHEET G-6
6. FOR SIZE AND LOCATION OF EQUIPMENT PADS SEE MECH. & ELECTRICAL DWGS.

TOP PLAN

SCALE: 1" = 10'-0"

Record Drawing

These record drawings have been prepared, in part, on the basis of information compiled and furnished by others. Kennedy/Jenks/Chilton is not responsible for any errors or omissions in this document as a result of information provided by others.

Dated APR. 29, 19 88

GRAPHIC SCALE

1/8" = 1'-0" 0 5 10 15 20 25

1" = 10' 0 5 10 15 20 25

Revised	Description	Submit.	Appr'd.	Date
6	C.O. NO. 3			
5	C.O. NO. 2			
4	CLARIFICATION			
3	FIELD CHANGE			
2	C.O. NO. 3			
1	C.O. NO. 23			

Refer to Tracing for Latest Revision

Reference Information and Notes:

Designed: SH.D., BMF
Drawn: RBC
Checked: SH.D
Date: 1-29-81

Wastewater Plant Improvements C-06-2464
Sausalito - Marin City Sanitary District

Kennedy/Jenks Engineers San Francisco

Submitted: Walter F. Gassman C9370
Approved: Robert J. Amen

ACCESS PLATFORM AND GENERATOR BUILDING

TOP PLANS

Scale: AS SHOWN
Job No. 0112
Sheet S-23 of

82

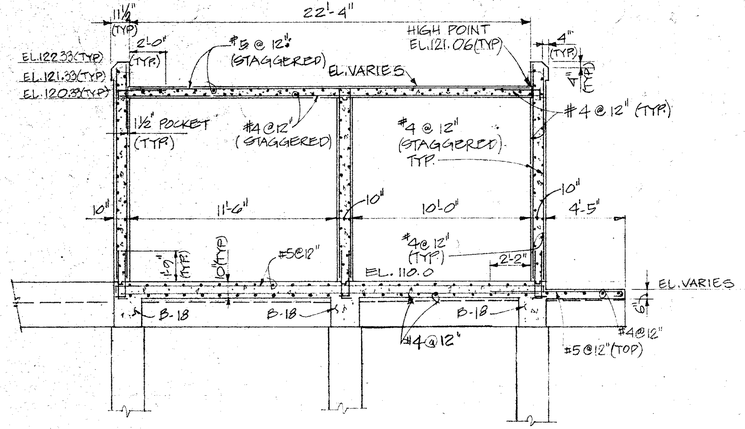

SECTION A
SCALE: 1/4"=1'-0" 23/24

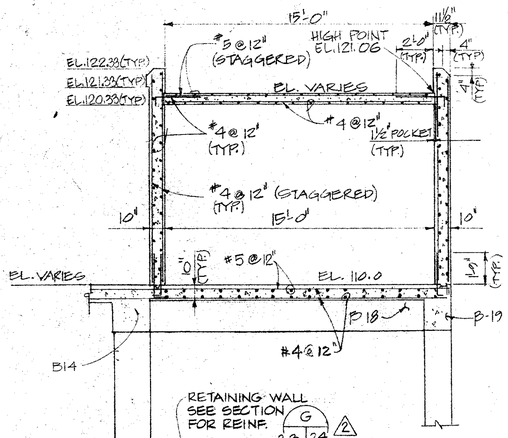

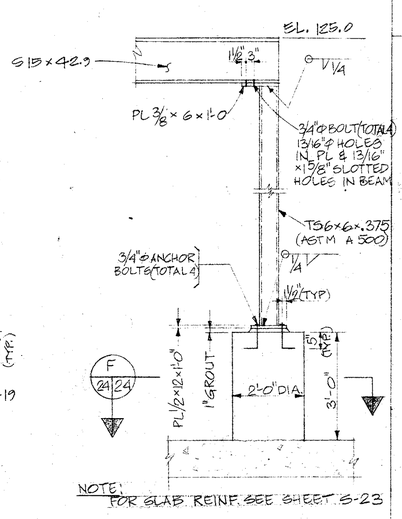

SECTION B
SCALE: 1/4"=1'-0" 23/24

SECTION D
SCALE: 1/4"=1'-0" 23/24

SECTION C
SCALE: 1/2"=1'-0" 23/24

SECTION E
SCALE: 1/4"=1'-0" 23/24

SECTION F
SCALE: 1/2"=1'-0" 24/24

ALL CAISSONS SHALL BE 30" DIA. REINF. CONCRETE W/ 19-#11, #3 SPIRAL @ 2½" PITCH. BOTTOM EL 109.0±

(REVISED 1)

FOOTING SCHEDULE

MARK	SIZE L	SIZE W	SIZE t	REINFORCING LONG WAY	REINFORCING SHORT WAY	REMARKS
F1	5'-0"	5'-0"	2'-0"	#6 @ 12" BOT	#6 @ 12" BOT	
F2	12'-6"	4'-0"	2'-0"	#5@12" BOT #7@6" TOP	#6@6" BOT #5@12" TOP	
F3	6'-6"	6'-6"	2'-0"	#7@12" BOT	#7@12" BOT	
F4	5'-6"	5'-6"	2'-0"	#6@12" BOT	#6@12" BOT	
F5	14'-0"	3'-0"	2'-0"	#8@12" BOT #9@6" TOP	#7@6" BOT #5@12" TOP	
F6	19'-0"	3'-0"	2'-0"	#5@12" BOT #9@6" TOP	#7@6" BOT #5@12" TOP	
F7	13'-0"	16'-0" 10'-3"	2'-6"	#5@12" BOT #7@6" TOP	#7@6" BOT #7@6" TOP	

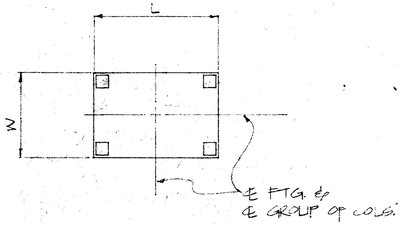

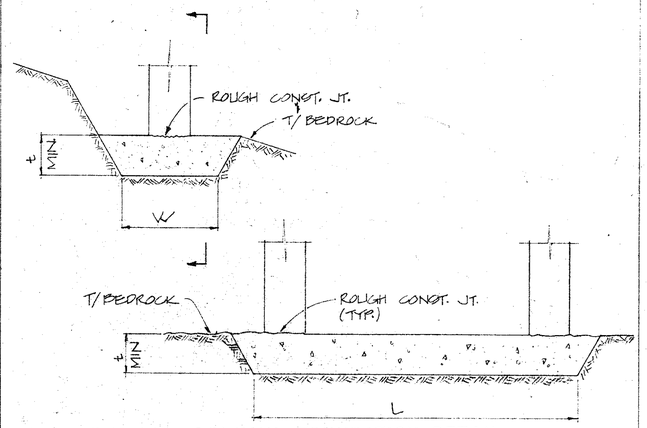

TYPICAL COLUMN FOUNDATION DETAIL
NO SCALE

BEAM SCHEDULE

MARK	SIZE B	SIZE D	REINFORCING BOT	REINFORCING TOP	STIRRUPS SIZE	STIRRUPS TYPE	STIRRUPS SPACING	REMARKS
B1	24	38	3-#9	3-#9 (CONT.) 3-#9 TOP BAR (2ND LAYER) SOUTH SUPP.	#4	2	@ 8" THRUOUT	EXTEND 4-#9 BOT. 3'-8" INTO ADJ. BM. SOUTH
B2	24	38	4-#9	3-#9 CONT.	#4	2	@ 8" THRUOUT	
B3	24	38	3-#8	4-#8 CONT.	#4	2	@ 8" THRUOUT	EXTEND 3-#8 BOT. 3'-0" INTO ADJ. BM NORTH
B4	24	38	5-#8	3-#8 CONT.	#4	2	@ 8" THRUOUT	EXTEND 3-#8 BOT. 3'-0" INTO ADJ. BM NORTH
B5	20	28	5-#8	3-#8 CONT.	#4	2	@ 5" THRUOUT	EXTEND 3-#8 BOT. INTO ADJ. BM NORTH
B6	16	24	2-#8	2-#8 CONT.	#4	2	@ 5" THRUOUT	EXTEND 2-#8 BOT. 3'-0" INTO ADJ. BM
B7	22	32	3-#8	3-#8 CONT.	#4	2	@ 7" THRUOUT	EXTEND 2-#8 BOT. 3'-0" INTO ADJ. BM SOUTH
B8	22	32	3-#8	3-#8 CONT.	#4	2	@ 7" THRUOUT	EXTEND 2-#8 BOT 3'-0" INTO ADJ. BM SOUTH
B9	22	32	2-#8	3-#8 CONT.	#4	2	@ 7" THRUOUT	
B10	22	32	3-#8	3-#8 CONT.	#4	2	@ 7" THRUOUT	
B11	22	32	6-#8	4-#8 CONT.	#4	2	@ 7" THRUOUT	EXTEND 3-#8 BOT. 3'-0" INTO ADJ. BM EAST
B12	22	32	3-#8	5-#8 CONT.	#4	2	@ 7" THRUOUT	
B13	22	32	5-#8	3-#8 CONT.	#4	2	@ 7" THRUOUT	EXTEND 3-#8 BOT. 3'-0" INTO ADJ. BM EAST
B14	22	32	3-#8	3-#8 CONT.	#4	2	@ 7" THRUOUT	EXTEND 1-#8 BOT. 3'-0" INTO ADJ. BM
B15	22	32	3-#8	3-#8 CONT	#4	2	@ 7" THRUOUT	EXTEND 2-#8 BOT. 3'-0" INTO ADJ. BM WEST EXTEND 3-#8 TOP 3'-0" INTO ADJ. BM
B16	22	32	3-#8	3-#8 CONT.	#4	2	@ 7" THRUOUT	EXTEND 3-#8 TOP 3'-0" & 2-#8 BOT. 3'-0" INTO ADJ. BM EAST
B17	22	32	3-#8	3-#8 CONT.	#4	2	@ 7" THRUOUT	EXTEND 3-#8 BOT. 3'-0" INTO ADJ. BM
B18	20	32	5-#8	2-#8 CONT.	#4	2	@ 7" THRUOUT	
B19	20	32	2-#9	3-#9 CONT.	#4	2	@ 7" THRUOUT	EXTEND BOT BARS 2'-6" INTO ADJ. BM

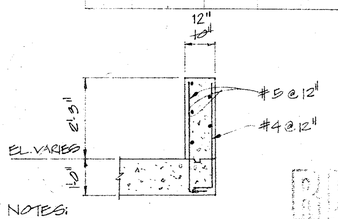

NOTES:
1.) STAGGER REINF.
2.) FOR DETAILS OF METAL RAILING SEE ARCH. DWGS.

SECTION G
SCALE: 1/2"=1'-0" 23/24

GRAPHIC SCALE
1/4" = 1'-0" 0 5 10
1/2" = 1'-0" 0 1 2 3 4 5

RECORD DRAWING

Revised	Description	Submit.	Appr'd.	Date
2	C.O. NO. 23			
1	C.O. NO. 2			

Refer to Tracing for Latest Revision

Reference Information and Notes:

Record Drawing
These record drawings have been prepared, in part, on the basis of information compiled and furnished by others. Kennedy/Jenks/Chilton is not responsible for any errors or omissions in this document as a result of information provided by others.
Dated APR. 84 by BB

Designed BMF, Sh.D.
Drawn RBC
Checked Sh.D
Date 1-29-81

Wastewater Plant Improvements C-06-2464
Sausalito - Marin City Sanitary District

Kennedy/Jenks Engineers San Francisco

Submitted: Walter E. Kamman C 9370
Approved:

ACCESS PLATFORM AND GENERATOR BUILDING

SECTIONS, DETAILS AND SCHEDULES

Scale AS SHOWN
Job No. 0112
Sheet S-24
of

LEGENDS

ABBREVIATIONS

A	AMPERES
AC	ALTERNATING CURRENT
ALT.	ALTERNATE
AR	ALARM RELAY
AUTO.	AUTOMATIC
AUX.	AUXILIARY
BCG	BARE COPPER GROUND
BD.	BOARD
BLDG.	BUILDING
C	CONDUIT
CHLO.	CHLORINATOR
CKT.	CIRCUIT
CONT.	CONTINUATION, CONTINUED
COMP.	COMPRESSOR
CTRL.	CONTROL
CR	CONTROL RELAY
CT	CURRENT TRANSFORMER
CS	CONTROL STATION
DC	DIRECT CURRENT
DISC.	DISCONNECT
DIST.	DISTRIBUTION
DWG.	DRAWING
DP	DISTRIBUTION PANEL
EXH.	EXHAUST
(E),EXIST.	EXISTING
ELECT.	ELECTRICAL
EL.,ELEV.	ELEVATION
EMERG.	EMERGENCY
EQUIP.	EQUIPMENT
ETM	ELAPSED TIME METER
FLEX.	FLEXIBLE
FLUOR.	FLUORESCENT
FS	FLOW SWITCH
FMC	FORWARD MAGNETIC CONTACTOR
G	GREEN
GALV.	GALVANIZED
HLS	HIGH LEVEL SENSOR
HOA	HAND-OFF-AUTOMATIC
HMC	HIGH SPEED MAGNETIC CONTACTOR
INC.	INCANDESCENT
INST.	INSTANTANEOUS
J	JUNCTION BOX
KV	KILOVOLTS
KVA	KILOVOLT AMPERES
KW	KILOWATTS
L	LINE
L1X, L2X	CONTROL POWER SOURCE
LOL	LOW OIL LEVEL
LTG.	LIGHTING
LS	LEVEL SWITCH
LMC	LOW SPEED MAGNETIC CONTACTOR
M	MOTOR
MAX.	MAXIMUM
MCC	MOTOR CONTROL CENTER
MCM	THOUSAND CIRCULAR MILS
MCP	MOTOR CIRCUIT PROTECTOR
MECH.	MECHANICAL
MS	MOTOR STARTER
MC	MAGNETIC CONTACTOR
N	NEUTRAL
NA	NON-AUTOMATIC
N.C.	NORMALLY CLOSED
NEMA	NATIONAL ELECTRICAL MANUFACTURERS ASSOC.
NO.	NUMBER
N.O.	NORMALLY OPEN
OL	THERMAL OVERLOAD RELAY
P	POLE
PG&E	PACIFIC GAS & ELECTRIC CO.
PNL.	PANEL
PRI.	PRIMARY
PS	PRESSURE SWITCH
PSI	POUNDS PER SQUARE INCH
PT	POTENTIAL TRANSFORMER
PVC	POLYVINYL CHLORIDE
R	RED
RD	ROAD
RCT	REPEAT CYCLE TIMER
RECEPT.	RECEPTACLE
RM.	ROOM
RMC	REVERSE MAGNETIC CONTACTOR
SEC.	SECONDS
SPEC.	SPECIFICATIONS
SULF.	SULFONATOR
SV	SOLENOID VALVE
TEL.	TELEPHONE
TEMP.	TEMPERATURE
TERM.	TERMINAL
TH	THERMOSTAT
TR	TIMING RELAY
TRANSF.	TRANSFORMER
TYP.	TYPICAL
TS	TORQUE SWITCH
V	VOLTS
V-A	VOLT-AMPERES
W	WIRE OR WIDTH
W/	WITH
WH	WATT HOUR METER

OTHER

@	AT
Y	WYE
▽	DELTA CONNECTED
⊄	AND
ø	PHASE
⊄	TO CIRCUIT
"	INCHES
'	FEET

PLANS (SEE NOTE 9)

- INDICATES EQUIPMENT REMOVAL
- EXPOSED CONDUIT, SEE NOTE 6
- CONCEALED CONDUIT, SEE NOTE 6
- 1/2" C - 3#12 — CALLOUT, INDICATING CONDUIT SIZE, NO. OF WIRES & WIRE SIZE
- 110 — CALLOUT, INDICATING CONDUIT PER SCHEDULE
- LIGHTING CONDUIT RUN. HATCH MARKS INDICATE NO. OF #12 CONDUCTORS NO HATCH MARKS 1S 2 #12
- HOMERUN TO PANELBOARD OR AS INDICATED
- FLEXIBLE CONDUIT
- M — DEVICE PER LETTER ABBREVIATIONS
- SAFETY SWITCH
- A a — FLUORESCENT LIGHT FIXTURE, SEE NOTE 1
- B b — WALL MOUNTED FIXTURE, SEE NOTE 1
- $a — SINGLE POLE SWITCH, SEE NOTE 2
- $3b — THREE-WAY SWITCH, SEE NOTE 2
- $MS — MANUAL MOTOR STARTER
- DUPLEX RECEPTACLE MOUNT AT ± 4'-0" OR AS NOTED
- DUPLEX RECEPTACLE **MOUNT AT ± 1'-0" OR AS NOTED**
- DUPLEX RECEPTACLE, MOUNTED ON BACK SPLASH
- GROUND ROD & GROUND ROD BOX
- CONTROL STATION
- UNIT HEATER
- POLE RISER
- WALL TELEPHONE OUTLET, MOUNT AT 1'-0" OR AS NOTED
- INSTRUMENTATION DEVICE
- S2 — SECURITY ALARM SENSOR ZONE 2

ELEMENTARY DIAGRAMS (SEE NOTE 7)

- ENCLOSURE AS INDICATED
- **REMOTE CONTROL WIRING**
- SINGLE POLE CIRCUIT BREAKER
- 3-POLE CIRCUIT BREAKER
- FUSE, AMPERE RATING AS NOTED
- I AR — CONTROL DEVICE COIL, PREFIX NO. WHEN USED DISTINGUISHES BETWEEN DEVICES OF THE SAME TYPE DEVICE (TYPE PER ABBREVIATIONS)
- R — PUSH-TO-TEST INDICATING LIGHT, COLOR PER ABBREVIATION
- NORMALLY OPEN PUSHBUTTON, SEE NOTE 3
- NORMALLY CLOSED PUSHBUTTON, SEE NOTE 3
- 2-POSITION SELECTOR SWITCH
- 3-POSITION SELECTOR SWITCH
- MANUAL STARTER, SINGLE POLE UNLESS OTHERWISE NOTED.
- TERMINALS — DISCONNECTING TYPE TERMINALS
- GROUND CONNECTION
- CONTACT NORMALLY OPEN, SEE NOTES 3, 4 & 5
- CONTACT NORMALLY CLOSED, SEE NOTES 3, 4 & 5
- SINGLE POLE SWITCH

SINGLE LINE DIAGRAM

- SWITCH, 3P EXCEPT WHERE NOTED. RATING AS NOTED
- 400AF 300AT — CIRCUIT BREAKER, 3P EXCEPT WHERE NOTED. RATING IN AMPS AS NOTED. AF-AMP FRAME; AT-AMP TRIP
- 7/40 — 3P MOTOR CIRCUIT PROTECTOR UPPER NO. INDICATES FRAME SIZE IN AMPS LOWER NO. INDICATES TRIP
- FUSE, RATING AS NOTED
- TRANSFORMER, RATING AS NOTED
- CURRENT TRANSFORMER
- PANELBOARD
- 5 — MOTOR, NO. INDICATES HORSEPOWER
- DOUBLE THROW SWITCH, AUTO OR MANUAL AS INDICATED
- FULL VOLTAGE, NON-REVERSING MAGNETIC STARTER, SIZE AS NOTED
- SERVICE TERMINATION
- 10 — ELEMENTARY DIAGRAM REFERENCE NO.
- CONTROLS PROVIDED W/EQUIPMENT AND NOT A PART OF THE ELECTRICAL WORK
- DEVICE PER ABBREVIATION
- HEATER, RATING AS INDICATED
- INDICATES EQUIPMENT REMOVAL

SENSING SWITCHES (SEE NOTES 3 & 5)

SYMBOL	TYPE	CLOSED ON
	LEVEL	RISING LEVEL
	LEVEL	FALLING LEVEL
	PRESSURE	RISING PRESSURE
	PRESSURE	FALLING PRESSURE
	LIMIT	ACTUATION

TIMED CONTACTS (SEE NOTES 3 & 5)

SYMBOL	NORMAL	OPEN TO CLOSE	CLOSE TO OPEN
	OPEN	DELAY	INST.
	CLOSED	INST.	DELAY

LEGEND NOTES

1. LOWER CASE LETTER ADJACENT TO A FIXTURE INDICATES SWITCH CIRCUIT. INSIDE UPPER CASE LETTER INDICATES FIXTURE TYPE AS DESCRIBED IN THE SPECIFICATION AND FIXTURE SCHEDULE.
2. LOWER CASE LETTER ADJACENT TO SWITCH INDICATES SWITCH CIRCUIT.
3. "NORMAL" STATUS OF CONTACTS OR VALVES IS THE SHELF POSITION.
4. NUMBER AND/OR LETTERS IDENTIFY CONTACTS & OPERATING COIL.
5. NUMBER AND/OR LETTERS IDENTIFY DEVICE.
6. CONDUIT SIZE & FILL SHALL BE AS INDICATED. WHERE NO SIZE IS SHOWN, THE CONDUIT SHALL BE SIZED IN ACCORDANCE WITH THE RECENT EDITION OF THE NATIONAL ELECTRICAL CODE.
7. UNDERLINED WORDS SHOWN AT PUSHBUTTONS, LIGHTS, SELECTOR SWITCHES, ETC., INDICATE THE LEGEND PLATE REQUIREMENT FOR THAT PARTICULAR DEVICE. ANY ADDITIONAL NAMEPLATES ARE INDICATED ON ELEVATIONS WITH THE REQUIRED NAMEPLATE INSCRIPTIONS.
8. ADJACENT UPPER CASE LETTER & NUMBER IDENTIFY PANELBOARD & CIRCUIT NUMBER.
9. EXCEPT AS NOTED, EQUIP. MOUNTING HEIGHTS ABOVE FLOOR SHALL BE AS FOLLOWS:

PANELBOARD	6'-6" (TOP OF ENCLOSURE)
SWITCHES	4'-0"
RECEPTACLES	3'-0" PER SPECS.
CONTROL STATIONS	4'-2"
LIGHTING TRANSF.	8'-0" (TOP OF)

Record Drawing
These record drawings may have been prepared, in part, on the basis of information compiled and furnished by others. Kennedy/Jenks/Chilton is not responsible for any errors or omissions in this document as a result of information provided by others.
Dated APR 29 19 88.

Revised	Description	Submit.	Appr'd.	Date
Refer to Tracing for Latest Revision				

Reference Information and Notes:

Designed JWS/RDS
Drawn CAB
Checked JWS
Date 1/29/81

Wastewater Plant Improvements C-06-2464
Sausalito - Marin City Sanitary District
Kennedy/Jenks Engineers San Francisco
Submitted: Approved:

ABBREVIATIONS, LEGEND AND NOTES

Scale NO SCALE
Job No. 0112
Sheet E-1 of

84

INSTRUMENT LEGEND

FIRST LETTER			SUCCEEDING LETTERS	
	INITIATING VARIABLE	MODIFIER	OUTPUT FUNCTIONS	MODIFIER
A	ANALYSIS		ALARM	
B				
C	CONDUCTIVITY		CONTROL	
D		DIFFERENTIAL		
E	POTENTIAL (VOLTS)		PRIMARY ELEMENT	
F	FLOW RATE	RATIO		
G				
H	HAND (MANUALLY)			HIGH
I			INDICATE	
J	POWER			
K	TIME/TIME SCHEDULE		CONTROL STATION	
L	LEVEL		LIGHT (PIOLT)	LOW
M				
N	STATUS			
O				
P	PRESSURE			
Q	QUANTITY	INTEGRATE/ TOTAL		
R			RECORD/PRINT/RECEIVE	
S	SPEED/FREQUENCY		SWITCH	
T	TEMPERATURE		TRANSMIT	
U				
V			VALVE	
W	WEIGHT/FORCE/TORQUE			
X	TELEMETRY		ISOLATE	
Y	SIGNAL		RELAY/COMPUTE	
Z	POSITION		DRIVE/ACTUATE	

INSTRUMENT TAG NUMBERS

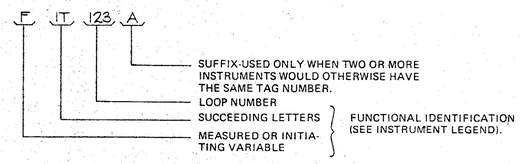

SYMBOLS FOR INSTRUMENTS

GRAPHIC SYMBOL	DESCRIPTION
	INSTRUMENT (SCHEMATIC DIAGRAMS)
	INSTRUMENT MOUNTED IN PROCESS FLOW LINE
12A	INSTRUMENT MOUNTED ON FACE OF PANEL 12A
12A	INSTRUMENT MOUNTED BEHIND PANEL 12A
	MULTI-FUNCTION INSTRUMENT

FUNCTION DESIGNATION FOR HARDWIRED RELAYS AND CONTROLLERS

SYMBOL	FUNCTION
Σ	ADD OR TOTALIZE (ADD AND SUBTRACT)
Δ	SUBTRACT
$\pm, +, -$	BIAS
AVG	AVERAGE
$\times$	MULTIPLY
$\div$	DIVIDE
$\sqrt{\ }$	EXTRACT SQUARE ROOT
X^n $X^{\frac{1}{n}}$	RAISE TO POWER
$f(x)$	CHARACTERIZE
|:|	BOOST AND ISOLATE
>	HIGHEST VALUE SELECTION
<	LOWEST VALUE SELECTION
REV	REVERSE
E/P, P/I (TYPICAL)	FOR INPUT/OUTPUT CONVERTERS USING THE FOLLOWING SIGNALS: E VOLTS, H HYDRAULIC, I CURRENT, P PNEUMATIC, R RESISTANCE, A ANALOG, D DIGITAL
P	PROPORTIONAL CONTROL ACTION
I	INTEGRAL CONTROL ACTION
I-O	ON/OFF CONTROL ACTION
Δ I-O	ON/OFF CONTROL ACTION WITH DIFFERENTIAL GAP
T/H	TRACK AND HOLD

SYMBOLS FOR PRIMARY SENSING ELEMENTS

SYMBOL	DESCRIPTION
	VENTURI TUBE OR FLOW NOZZLE
	FLUME
	WEIR
	TURBINE OR PROPELLER-TYPE
	ORIFICE PLATE
FE	
FT	UNCLASSIFIED PRIMARY FLOW ELEMENT WITH INTEGRAL TRANSMITTER (e.g. MAGNETIC TARGET OR MASS FLOW METERS).

INSTRUMENT LINE SYMBOLS

SYMBOL	DESCRIPTION
	PROCESS FLOW LINE
	PNEUMATIC SIGNAL
	ELECTRICAL SIGNAL (ANALOG)
	ELECTRICAL SIGNAL (DISCRETE)
	HYDRAULIC SIGNAL
	CONNECTOR
	MECHANICAL CONNECTION OR LINKAGE
AS	AIR SUPPLY
ES	ELECTRICAL SUPPLY (120 VAC)
ES 24	ELECTRICAL SUPPLY (24 VDC)
	LINES CROSSING (NO CONNECTION)
	LINES JOINING
	DIRECTION OF FLOW

SYMBOLS FOR CONTROL VALVE ACTUATORS

SYMBOL	DESCRIPTION
	DIAPHRAGM, SPRING-OPERATED
	CYLINDER, SINGLE-ACTING
	CYLINDER, DOUBLE-ACTING
	HAND ACTUATOR
E/H	ELECTRO-HYDRAULIC ACTUATOR
S	SOLENOID
M	MOTOR

MISCELLANEOUS DEVICES

SYMBOL	DESCRIPTION
VS	VARIABLE SPEED PUMP
P	PURGE DEVICE
	RUPTURE DISC FOR PRESSURE RELIEF
	THERMOMETER WELL
	SPECIAL RECEPTACLE

FUNCTION DESIGNATION AND ABBREVIATIONS

PCP	PROCESS CONTROL PANEL
MCC	MOTOR CONTROL CENTER
MCP	MAIN CONTROL PANEL
CP	CONTROL PANEL
CS	CONTROL STATION
SP	SET POINT
GP	GRAPHIC PANEL
ECP	ELECTRICAL CONTROL PANEL
	GENERALIZED SYMBOL FOR INTERLOCK LOGIC PROVIDED BY ELECTRICAL. NUMBER IS AN ELEMENTARY DIAGRAM NUMBER SHOWN ON THE ELECTRICAL DRAWINGS.
ARP	AUX. RELAY PANEL
IP	INSTRUMENT PANEL
AA	ALARM ANNUNCIATOR
HOA	HAND-OFF-AUTO

NOTES

FOR SPECIFIC INSTRUMENT DESIGNATIONS, REFER TO GENERAL INSTRUMENT SCHEDULE IN SPECIFICATION SECTION 17000.

FOR INSTRUMENT TYPES AND CALIBRATION, REFER TO INDIVIDUAL INSTRUMENT SCHEDULES AT REAR OF SPECIFIC INSTRUMENT SPECIFICATION SECTION.

Revised	Description	Submit.	Appr'd.	Date
Refer to Tracing for Latest Revision				

Reference Information and Notes:
FOR CONTROL VALVE SYMBOLS SEE MECHANICAL DRAWINGS

Record Drawing
These record drawings have been prepared, in part, on the basis of information compiled and furnished by others. Kennedy/Jenks/Chilton is not responsible for any errors or omissions in this document as a result of information provided by others.
Dated APR 29 19 88

Designed	JCN
Drawn	PG
Checked	JWS
Date	1/20/81

Wastewater Plant Improvements C-06-2464
Sausalito-Marin City Sanitary District
Kennedy/Jenks Engineers San Francisco
Submitted: Walter F. Grunsman C9370 Approved: R. Bob J. Linsley

INSTRUMENT SYMBOLS AND IDENTIFICATION

Scale: NONE
Job No. 0112
Sheet No. I-1 of

Check Drawing
These record drawings have been prepared, in part, on the basis of information compiled and furnished by others. Kennedy/Jenks/Chilton is not responsible for any errors or omissions in this document as a result of information provided by others.
Dated
RECORD DRAWING

109

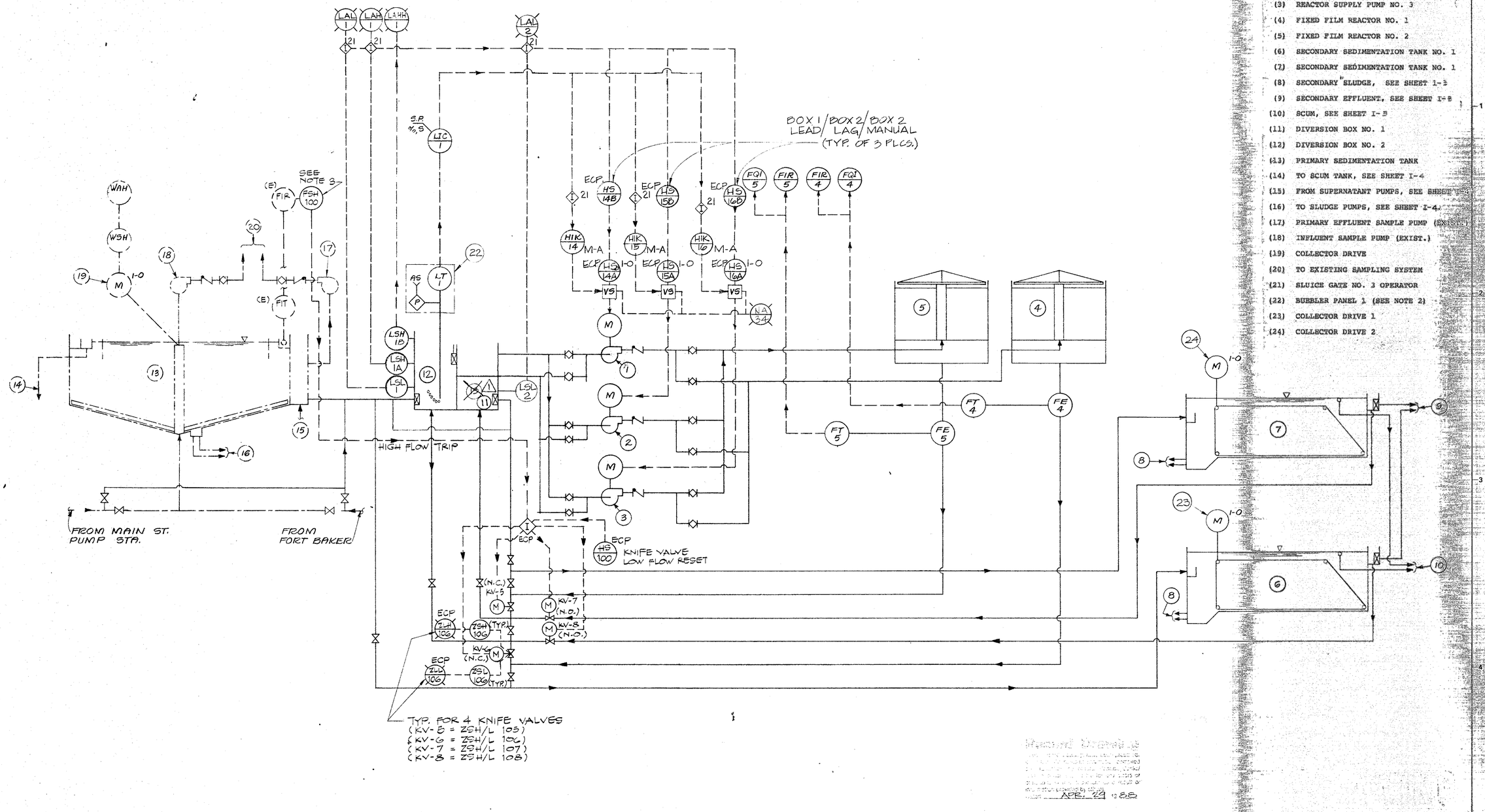

(1) REACTOR SUPPLY PUMP NO. 1
(2) REACTOR SUPPLY PUMP NO. 2
(3) REACTOR SUPPLY PUMP NO. 3
(4) FIXED FILM REACTOR NO. 1
(5) FIXED FILM REACTOR NO. 2
(6) SECONDARY SEDIMENTATION TANK NO. 1
(7) SECONDARY SEDIMENTATION TANK NO. 1
(8) SECONDARY SLUDGE, SEE SHEET I-3
(9) SECONDARY EFFLUENT, SEE SHEET I-3
(10) SCUM, SEE SHEET I-3
(11) DIVERSION BOX NO. 1
(12) DIVERSION BOX NO. 2
(13) PRIMARY SEDIMENTATION TANK
(14) TO SCUM TANK, SEE SHEET I-4
(15) FROM SUPERNATANT PUMPS, SEE SHEET I-4
(16) TO SLUDGE PUMPS, SEE SHEET I-4
(17) PRIMARY EFFLUENT SAMPLE PUMP (EXIST.)
(18) INFLUENT SAMPLE PUMP (EXIST.)
(19) COLLECTOR DRIVE
(20) TO EXISTING SAMPLING SYSTEM
(21) SLUICE GATE NO. 3 OPERATOR
(22) BUBBLER PANEL 1 (SEE NOTE 2)
(23) COLLECTOR DRIVE 1
(24) COLLECTOR DRIVE 2

Record Drawing
APR 29 1982

Revised	Description	Submit.	Appr'd.	Date
1	CLARIFICATION			

Refer to Tracing for Latest Revision

Reference Information and Notes:
1. LOCATE PANEL MOUNTED INSTRUMENTS IN THE INSTRUMENT PANEL UNLESS OTHERWISE NOTED.
2. SEE SHEET I-6 FOR BUBBLER PANEL DETAILS.
3. ADD (N) CAM & MICROSWITCH TO (E) BIF CHRONOFLO RECORDER TO CLOSE ON RISING FLOW (ADJUSTABLE OVER FULL RECORDER SPAN). SET @ 3.6 MGD INITIALLY.

Designed: RDS/JN
Drawn: AM
Checked: JWS
Date: 1/29/81

Wastewater Plant Improvements C-06-2464
Sausalito - Marin City Sanitary District

Kennedy/Jenks Engineers — San Francisco
Submitted: [signature] — Approved: [signature]

PROCESS & INSTRUMENTATION DIAGRAM I

Scale: NONE
Job No.: 0112
Sheet: I-2 of

(1) SCREEN PUMP
(2) CHLORINE CONTACT TANK
(3) RECLAIMED WATER PUMP 1
(4) RECLAIMED WATER PUMP 2
(5) RECLAIMED WATER PUMP 3
(6) _____
(7) _____
(8) SAMPLE PUMP 3 (SEC. EFFLUENT)
(9) SAMPLE PUMP 5 (CHLORINATED EFFLUENT)
(10) SAMPLE PUMP 6 (FINAL EFFLUENT)
(11) FROM SECONDARY SEDIMENTATION TANKS, SEE SHEET I-1
(12) ANALYZER 1
(13) ANALYZER 2
(14) SULFONATOR 1
(15) SULFONATOR 2
(16) CHLORINATOR 1
(17) CHLORINATOR 2
(18) BUBBLER PANEL 2
(19) SAMPLE PUMP 4
(20) BUBBLER PANEL 3
(21) CONTROL CABINET

TO WATER SPRAYS, ETC.
STORAGE TANK (EXIST.)
IRRIG.
TO 4 SAMPLERS
H-O-A MCC
LEAD-LAG-FOLLOW MCC
AUTO/OFF/PRE-DECHLOR/POST-DECHLOR
PRE-DECHLOR RESIDUAL
POST-DECHLOR RESIDUAL
DELAY
ANALYZER 1 /ANALYZER 2
FLOW
LEAD LAG
EFFLUENT SCREEN
WEIR
CCT-1
CCT2
OUTFALL
PRE-DECHLOR
POST-DECHLOR
CHLOR FB
PRE/POST DECHLOR
CHLOR
PRE/POST
PLUG POSITIONER
VACUUM REG.
SO_2 INJECTOR
SO_2 INJECTOR
CL_2 INJECTOR
CL_2 INJECTOR
SO_2 GAS
FROM SO_2 TANKS
CL_2 GAS
CL_2 GAS
FROM CHLORINE CYLINDERS
CL_2 LEAK DET.
SO_2 LEAK DET.

Record Drawing
These record drawings have been prepared in part on the basis of information compiled and furnished by others. Kennedy/Jenks/Chilton is not responsible for any errors or omissions in this document as a result of information provided by others.
Dated APR. 29 1988

Revised	Description	Submit.	Appr'd.	Date
Refer to Tracing for Latest Revision				

Reference Information and Notes:

Designed RDS/JN
Drawn AM
Checked JWS
Date 1/29/81

Wastewater Plant Improvements C-06-2464
Sausalito - Marin City Sanitary District
Kennedy/Jenks Engineers **San Francisco**
Submitted: Walter Hamman 2/5/81 Approved: Robert J. Chen

PROCESS & INSTRUMENTATION DIAGRAM 2

Scale NONE
Job No. 0112
Sheet I-3 of

105

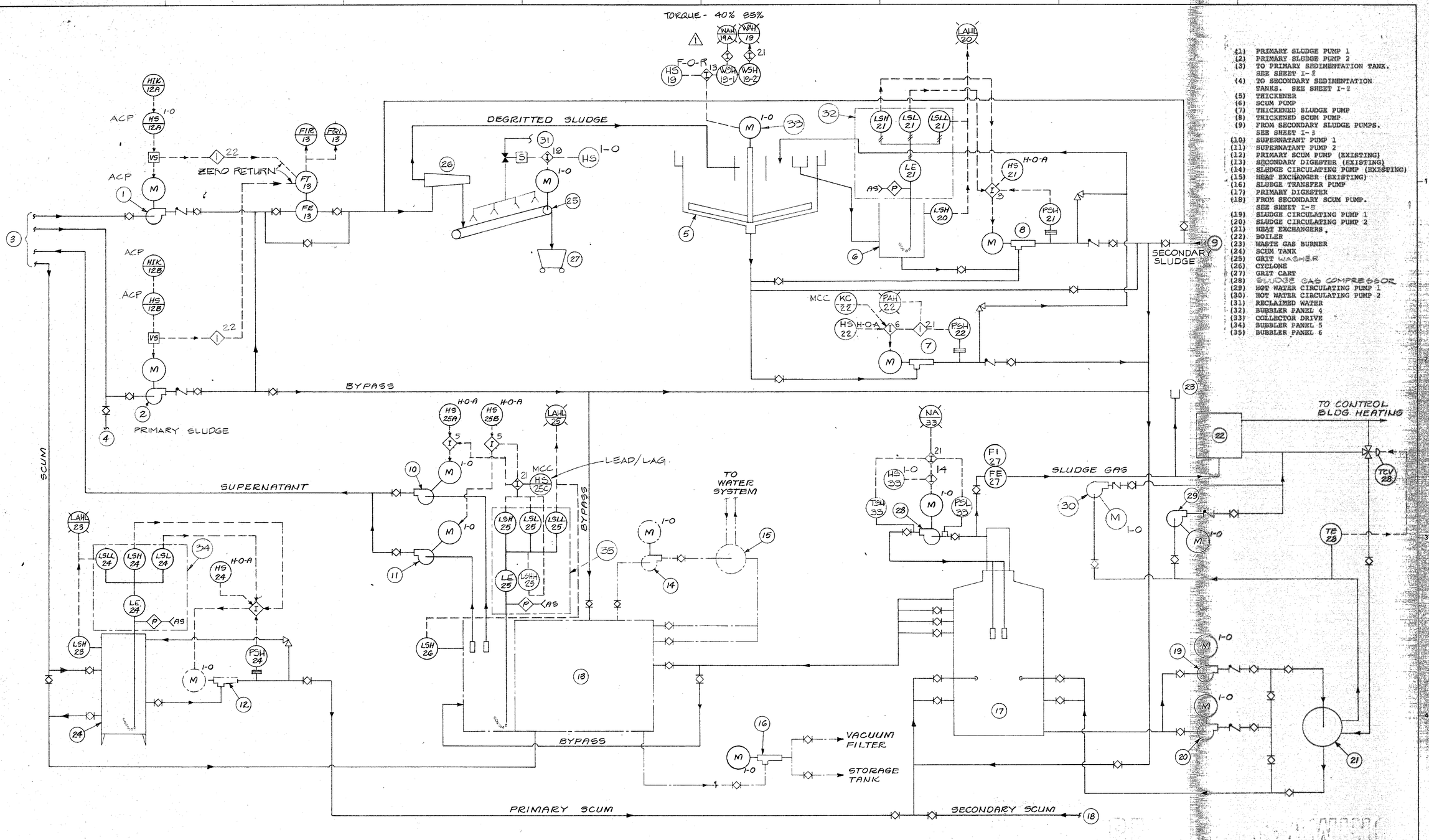

(1) PRIMARY SLUDGE PUMP 1
(2) PRIMARY SLUDGE PUMP 2
(3) TO PRIMARY SEDIMENTATION TANK. SEE SHEET I-2
(4) TO SECONDARY SEDIMENTATION TANKS. SEE SHEET I-2
(5) THICKENER
(6) SCUM PUMP
(7) THICKENED SLUDGE PUMP
(8) THICKENED SCUM PUMP
(9) FROM SECONDARY SLUDGE PUMPS. SEE SHEET I-3
(10) SUPERNATANT PUMP 1
(11) SUPERNATANT PUMP 2
(12) PRIMARY SCUM PUMP (EXISTING)
(13) SECONDARY DIGESTER (EXISTING)
(14) SLUDGE CIRCULATING PUMP (EXISTING)
(15) HEAT EXCHANGER (EXISTING)
(16) SLUDGE TRANSFER PUMP
(17) PRIMARY DIGESTER
(18) FROM SECONDARY SCUM PUMP. SEE SHEET I-3
(19) SLUDGE CIRCULATING PUMP 1
(20) SLUDGE CIRCULATING PUMP 2
(21) HEAT EXCHANGERS,
(22) BOILER
(23) WASTE GAS BURNER
(24) SCUM TANK
(25) GRIT WASHER
(26) CYCLONE
(27) GRIT CART
(28) SLUDGE GAS COMPRESSOR
(29) HOT WATER CIRCULATING PUMP 1
(30) HOT WATER CIRCULATING PUMP 2
(31) RECLAIMED WATER
(32) BUBBLER PANEL 4
(33) COLLECTOR DRIVE
(34) BUBBLER PANEL 5
(35) BUBBLER PANEL 6

Revised	Description	Submit.	Appr'd.	Date
1	CO NO. 56			

Refer to Tracing for Latest Revision

Reference Information and Notes:

Record Drawing
These record drawings have been prepared, in part, on the basis of information compiled and furnished by others. Kennedy/Jenks/Chilton is not responsible for any errors or omissions in this document as a result of information provided by others.
Dated APR. 29, 19 88

Record Drawing
Certified Engineer's Report
Date

Designed	RDS/JN
Drawn	AM
Checked	JWS
Date	1/29/81

Wastewater Plant Improvements C-06-2464
Sausalito - Marin City Sanitary District

Kennedy/Jenks Engineers — San Francisco
Submitted: Walter F. Eichman C9370 — Approved: Robert J. Kennedy

PROCESS & INSTRUMENTATION DIAGRAM 3

Scale: NONE
Job No.: 0112
Sheet: I-4 of

106

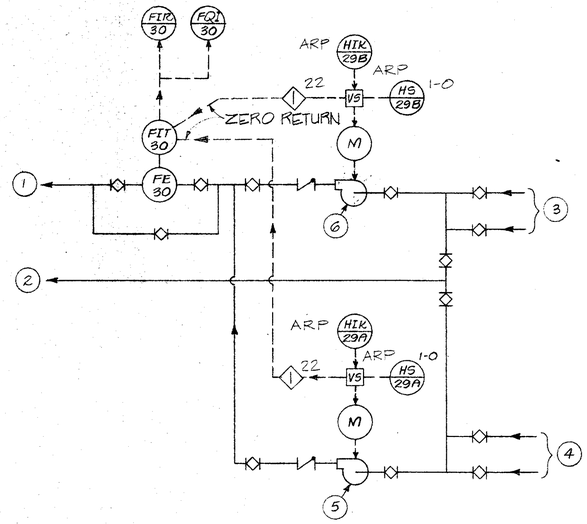

SECONDARY SLUDGE SYSTEM

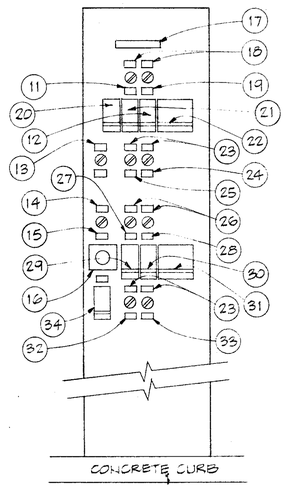

CHLORINATION / DECHLORINATION
CONTROL PANEL
FRONT ELEVATION
SCALE: NONE

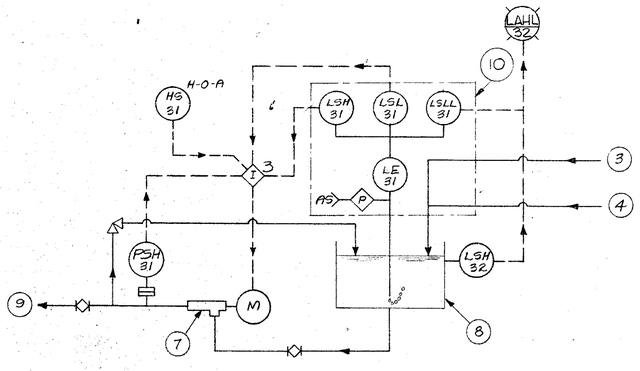

SECONDARY SCUM SYSTEM

(1) TO CYCLONE, SEE SHEET I-4
(2) TO PRIMARY SLUDGE PUMP 2, SEE SHEET I-4
(3) TO SECONDARY SEDIMENTATION TANK 2, SEE SHEET I-2
(4) TO SECONDARY SEDIMENTATION TANK 1, SEE SHEET I-2
(5) SECONDARY SLUDGE PUMP 1
(6) SECONDARY SLUDGE PUMP 2
(7) SECONDARY SCUM PUMP
(8) SECONDARY SCUM SUMP
(9) TO PRIMARY DIGESTER, SEE SHEET I-4
(10) BUBBLER PANEL 7
(11) CHLORINATOR 1
* (12) CHLORINE RESIDUAL CONTROLLER AIC 17
(13) ANALYZER 1 – ANALYZER 2
(14) AUTO–OFF PRE-DECHLORINATION POST-DECHLORINATION
(15) DECHLORINATION CONTROL SELECTOR
(16) DECHLORINATION REPEAT CYCLE TIMER KIC 18
(17) CHLORINATION/DECHLORINATION CONTROL PANEL
(18) LEAD-LAG
(19) CHLORINATOR 2
(20) CHLORINATOR 1 DOSAGE
(21) CHLORINATOR 2 DOSAGE
(22) PRE-DECHLORINATION CHLORINE RESIDUAL RECORDER AIR 17
(23) OFF—ON
(24) CHLORINATOR 2 ABNORMAL VACUUM ALARM BYPASS
(25) CHLORINATOR 1 ABNORMAL VACUUM ALARM BYPASS
(26) LEAD-LAG
(27) SULFORATOR 1
(28) SULFORATOR 2
(29) SULFORATOR 1 DOSAGE
(30) SULFORATOR 2 DOSAGE
(31) PRE/POST DECHLORINATION CHLORINE
(32) SULFORATOR 1 ABNORMAL VACUUM ALARM BYPASS
(33) SULFORATOR 2 ABNORMAL VACUUM ALARM BYPASS

(34) SULFONATOR CONTROL RATIO ADJUST AFY-13

* CONTROLLER MODULE REMOVED IN FIELD. TERMINAL CAN REMAINS. △1

Revised	Description	Submit.	Appr'd.	Date
△1	FIELD CHANGE			

Refer to Tracing for Latest Revision

Reference Information and Notes:

Record Drawing
These record drawings have been prepared, in part, on the basis of information compiled and furnished by others. Kennedy/Jenks/Chilton is not responsible for any errors or omissions in this document as a result of information provided by others.
Dated APR. 29, 19 88

Designed RDS/JN
Drawn AM
Checked JWS
Date 1/29/81

Wastewater Plant Improvements C-06-2464
Sausalito - Marin City Sanitary District
Kennedy/Jenks Engineers **San Francisco**
Submitted: Walter F. Hansman C9370
Approved: Robert J. Amey

PROCESS & INSTRUMENTATION
DIAGRAM 4

Scale NONE
Job No. 0112
Sheet I-5 of

107

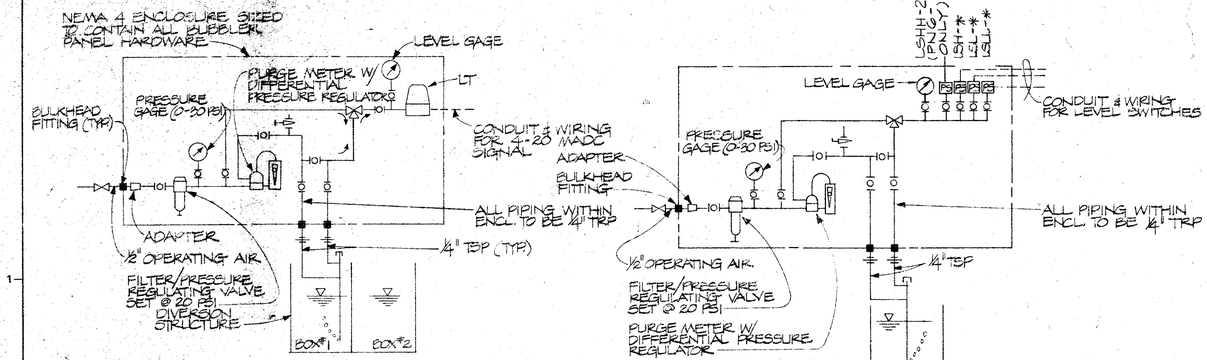

BUBBLER PANEL NO. 1

TYPICAL FOR BUBBLER PANELS 4,5,6,& 7

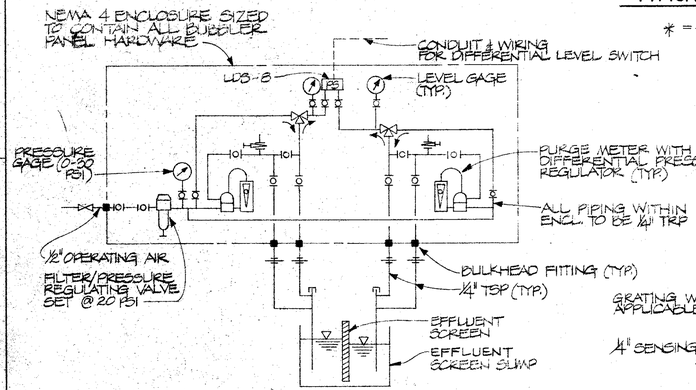

* = INST LOOP NUMBER

21	FOR BUBBLER PNL. 4
24	" " " " 5
25	" " " " 6
31	" " " " 7

BUBBLER PANEL NO. 2

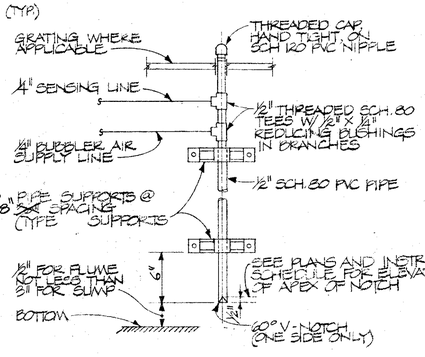

BUBBLER DETAIL

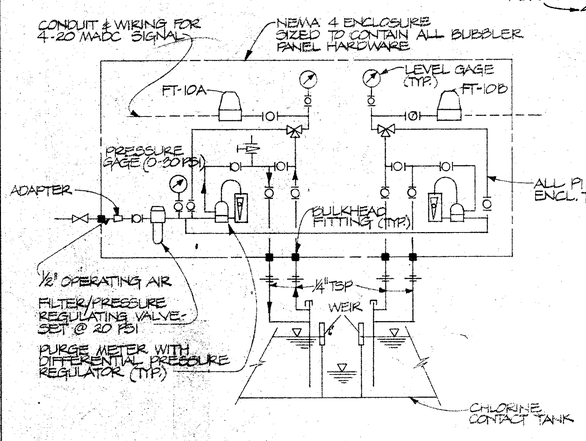

BUBBLER PANEL NO. 3

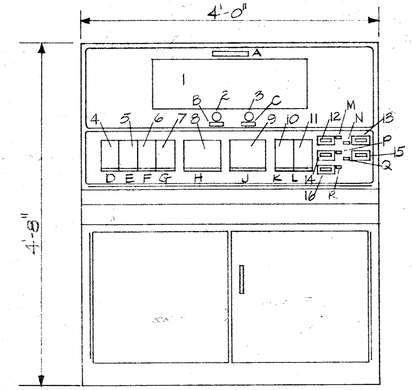

FRONT ELEVATION

DEVICE SCHEDULE

1. ANNUNCIATOR PANEL		9. FIK 13	
2. RESET PUSHBUTTON		10. FI 15	
3. ALARM ACKNOWLEDGE PUSHBUTTON		11. FI 30	
4. LIC 1		12. FQI 4	
5. FIK 4		13. FQI 5	
6. FIK 15		14. FQI 10	
7. FIK 16		15. FQI 13	
8. FIK 4/FIR 5		16. FQI 30	

NAMEPLATE SCHEDULE

A. "INSTRUMENT PANEL"
B. "ALARM RESET"
C. "ALARM ACKNOWLEDGE"
D. "DIVERSION BOX LEVEL CONTROLLER"
E. "REACTOR SUPPLY PUMP NO.1 MANUAL LOADING STATION"
F. "REACTOR SUPPLY PUMP NO.2 MANUAL LOADING STATION"
G. "REACTOR SUPPLY PUMP NO.3 MANUAL LOADING STATION"
H. "PEN NO.1 = FIXED FILM REACTOR NO.1 FLOW PEN NO.2 = FIXED FILM REACTOR NO.2 FLOW"
J. "PLANT OUTFLOW"
K. "PRIMARY SLUDGE FLOW"
L. "SECONDARY SLUDGE FLOW"
M. "FFR NO.1 TOTAL FLOW x 1000 GAL."
N. "FFR NO.2 TOTAL FLOW x 1000 GAL."
P. "OUTFLOW TOTAL x 1000 GAL."
Q. "PRIMARY SLUDGE FLOW x 100 GAL."
R. "SECONDARY SLUDGE FLOW x 100 GAL."

INSTRUMENT PANEL

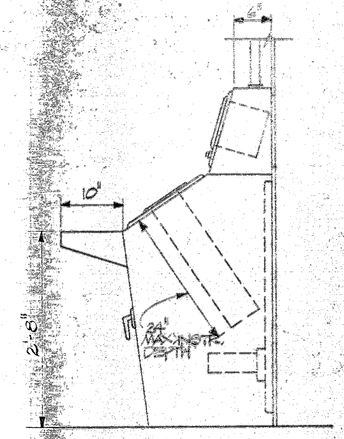

SIDE ELEVATION

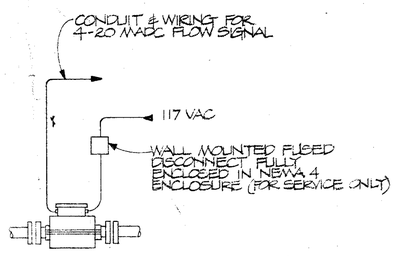

MAGNETIC FLOWMETER INSTALLATION DETAIL

Revised	Description	Submit.	Appr'd.	Date
	Refer to Tracing for Latest Revision			

Reference Information and Notes:

Record Drawing
These record drawings have been prepared, in part, on the basis of information compiled and furnished by others. Kennedy/Jenks/Chilton is not responsible for any errors or omissions in the document as a result of information provided by others.
Dated Apr. 29, 1982

Designed	RDS/JN
Drawn	AYS
Checked	JWS
Date	1/29/81

Wastewater Plant Improvements C-06-2464
Sausalito - Marin City Sanitary District

Kennedy/Jenks Engineers — San Francisco

Submitted: Walter E. Harman ©9370 — Approved: Robert J. Lanza

PANEL LAYOUT & DETAILS

Scale: NONE
Job No. 0112
Sheet: I-6 of

AS-BUILT DRAWING

PROPERTY LINE

CHLORINE CONTACT TANK BELOW CONTROL BLDG. SEE SH. E-6

SECONDARY GALLERY BELOW, SEE SH. E-11

DIVERSION BOXES, SEE SH. E-10

SECONDARY STRUCTURE

FIXED FILM REACTOR 1 SEE SH. E-7 & E-11

FIXED FILM REACTOR 2 SEE SH. E-7 & E-11

EFFLUENT SCREEN SUMP SEE SH. E-11

CONTROL BLDG. SEE SH. E-5 & E-10

CONTROL ROOM (E)

ACCESS CAUSEWAY

SAMPLE PUMPS #3 & #4 SEE SH. E-10

RECLAIMED WATER PUMPS, SEE SH. E-10

SECONDARY SEDIMENTATION TANKS BELOW FIXED FILM REACTORS

SAMPLE PUMP #4 & SECONDARY SCUM PUMP SEE SH. E-11

PRIMARY SEDIMENTATION TANK (E) SEE SH. E-9

TRANSFORMER 'MS-3'

SECONDARY DIGESTER (E)

ACCESS PLATFORM

GENERATOR BUILDING SEE SH. E-6 & E-12

(N) SWITCHBOARD

SLUDGE THICKENER

PRIMARY DIGESTER

SEE SH. E-6 & E-12

SEE SH. E-12 FOR ACCESS PLATFORM CONDUIT AND PULL BOXES

STORAGE ROOM (EXIST. LAB. BELOW VACUUM FILTER ROOM)

SLUDGE LOADING AREA (E) BELOW VACUUM FILTER ROOM

VACUUM FILTER ROOM (E)

(N) P.G.&E. TRANSFORMER

TO EXISTING TELE BOARD

CONNECT TO EXISTING CABLE IN CONDUIT STUBOUT

PVC - IN TRENCH W/POWER CONDUITS

RIGID - UNDER STAIRS (ON RACK)

GARAGE (E)

OFFICE (E)

SHED (E)

CONDUITS ENCASED IN CONCRETE DUCT BANK

(E) 2" TELE CONDUIT

PULLBOX '23'

PULLBOX '11'

(N) P&E PULLBOX 3'X5'

(E) SERVICE EQUIPMENT CABINET (E)

(E) POWER & TEL. POLE TO BE ABANDONED AND REMOVED FROM SITE

TRANSFORMER 'MS-2'

SHOP (E)

PULLBOX 'I2'

PULLBOX 'B'

PULLBOX 'I1'

PULLBOX 'A'

ACCESS ROAD

SAFETY EQUIPMENT STORAGE BLDG. SEE SH. E-8

CHLORINE STORAGE BUILDING SEE SH. E-8

TRANSF. 'MS-1'

SULFUR DIOXIDE STORAGE BLDG. (E) SEE SH. E-8

P.G.&E. SERVICE DROP (E) TO BE REMOVED

CONCRETE CUTOFF WALLS AT 20' SPACING FOR A TOTAL OF 5.

(N) 4" SCH. 80 PVC CONDUIT W/36" COVER (PG&E PRIMARY)

(N) P&E POLE

(E) 3Φ 12KV OVERHEAD

(E) CONCRETE GUTTER

POWER & TEL. POLE P:5 WITH 2 - 25KVA TRANSFORMERS (E)

(N) P.G.&E. 3'X5' PULLBOX

(E) EASEMENT

FORT BAKER ROAD

GROUNDING SYSTEM SCHEMATIC

NO SCALE

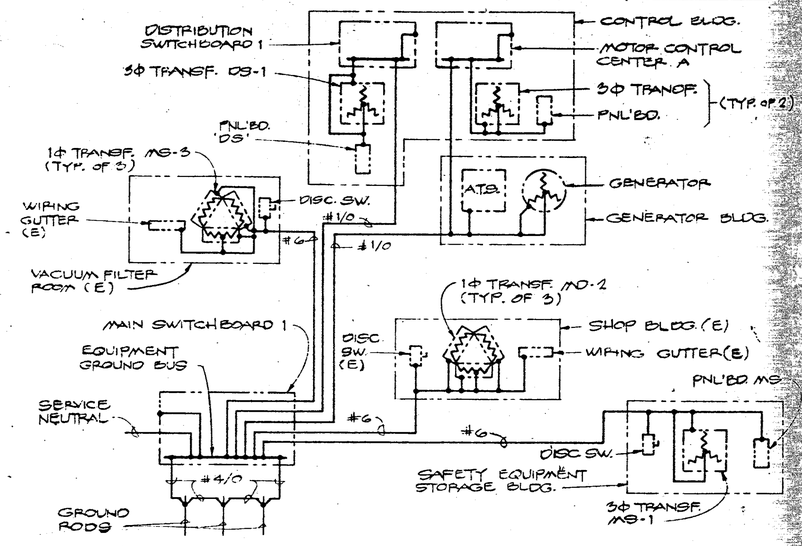

PULLBOX SIZES			
TAG	INSIDE DIMENSIONS, INCHES		
	WIDTH	LENGTH	DEPTH
A	12	24	36
B	12	24	36
C	12	24	36
I1	12	24	36
I2	12	24	36
I3	12	24	36
T1	27"x42" CRISTY #K4047		

Record Drawing
This record drawing has been prepared, in part, on the basis of information compiled and furnished by others. Kennedy/Jenks is not responsible for any errors or omissions in this document as a result of information provided by others.
Dated APR. 29 19 88

GRAPHIC SCALE
0 10 20 30 40 50
1" = 20'

RECORD DRAWING

Reference Information and Notes:
1. SEE SHT. E-8 AND E-9 FOR CONDUIT SCHEDULES.

Record Drawing
This record drawing has been prepared, in part, on the basis of information compiled and furnished by others. Kennedy/Jenks is not responsible for any errors or omissions in this document as a result of information provided by others.
Dated _____

Revised	Description	Submit.	Appr'd.	Date
2	ADDENDUM NO. 2 CO NO. 59 & 8			

Refer to Tracing for Latest Revision

Designed: ROS
Drawn: CB, WL
Checked: JWS
Date: 1/29/81

Wastewater Plant Improvements C-06-2484
Sausalito - Marin City Sanitary District
Kennedy/Jenks Engineers San Francisco
Submitted: Walter E. Hausman 02670
Approved: R. Ross Owen

ELECTRICAL SITE PLAN

Scale: 1" = 20'
Job No. 0112
Sheet E-2 of

MAIN SWITCHBOARD 1

LOCATED ON PAD NEAR TRANSFORMER

METER & CURRENT TRANSFORMER BY UTILITY CO.

600A, 480V, 3Φ, 4 WIRE BUS

600AF 600AT

400AF 250AT | 100AF 25AT | 225AF | 225AF | 400AF 300AT | SPACE FOR 2-400A, 2-225A & 4-100A FUT. BF BKRS MIN.

60A TRANSF. 'MS-1'

2 POLES 225 AT, 1 POLE 175 AT

2 POLES 125 AT, 1 POLE 75 AT

PULL SECTION

MAIN & UTILITY METERING SECTION

TO P.G.&E. TRANSFORMER

MCC-B IN GEN. RM.

15 KVA, 3Φ, 480-208Y/120V

PANELBOARD 'MS-1' (IN SAFETY STORAGE BLDG.)

FEEDER TO TRANSFORMER 'MS-3' REFER TO SHEET E-4

~~FEEDER TO TRANSFORMER 'MS-2' REFER TO SHEET E-4~~

PANELBOARD "LA" (IN CHLOR. STOR. BLDG.)

PANELBOARD "LB" (IN SULFUR DIOXIDE STOR. BLDG.)

AUTOMATIC TRANSFER SWITCH

LOCATED IN GENERATOR BLDG.

PNL. BD. H1 (IN GEN. RM.) 100A MAIN 277-480V, 3Φ 4W

400A, 480V, 3 POLE SWITCH

400A

100 ~~DGKW~~, 0.8PF, 480Y/277V 3Φ 60Hz GENERATOR

ENG. GEN. ~~400AF 250AT~~ 225 AF 200 AT

DISTRIBUTION PANELBOARD 1

LOCATED IN CONTROL ROOM

600A, 480V, 3Φ, 3 WIRE BUS

400AF NON-AUTO | 100AF 80AT | 100AF 80AT | 100AF 80AT | 100AF 45AT | 100AF 15AT | 100 AF 15 AT

TRANSF. 'DS' 30 KVA, 3Φ, 480-208Y/120V

30A | 30A

REACTOR SUPPLY PUMP 1

REACTOR SUPPLY PUMP 2

REACTOR SUPPLY PUMP 3

PANELBOARD 'DS' (IN CONTROL ROOM)

SECONDARY GALLERY HOIST & TROLLEY

GATE OPERATOR (TYP. OF 4)

KV-X5 | KV-X6 | KV-X7 | KV-X8

EMERGENCY GENERATOR

LOCATED IN GENERATOR BLDG.

INCOMING FROM FUSIBLE SWITCH

MOTOR CONTROL CENTER 'A'

LOCATED IN CONTROL ROOM

600A, 480V, 3Φ, 3 WIRE BUS

400AF 250AT | MCP-7 42 | MCP-3 18 | MCP-3 18 | MCP-3 18 | MCP-3 18 | MCP-3 13 | MCP-3 13 | MCP-7 42 | MCP-7 54 | MCP-7 54 | MCP-7 42 | MCP-3 18 | MCP-7 42 | MCP-7 42 | MCP-3 13 | MCP-7 42 | MCP-7 42 | MCP-15 94 | MCP-7 42 | MCP-7 42 | MCP-7 42 | MCP-7 41 | MCP-30 140 | MCP-30 140 | MCP-30 140

100AF 15AT | 100AF ~~150AF~~ 90 AT | 100AF 45AT | 100AF 15AT

DELETED

TRANSF. 'A1' 9 KVA, 3Φ, 480-208Y/120V

TRANSF. 'A2' 30 KVA, 3Φ, 480-208Y/120V

DUPLEX PUMP CONTROL

| | | |

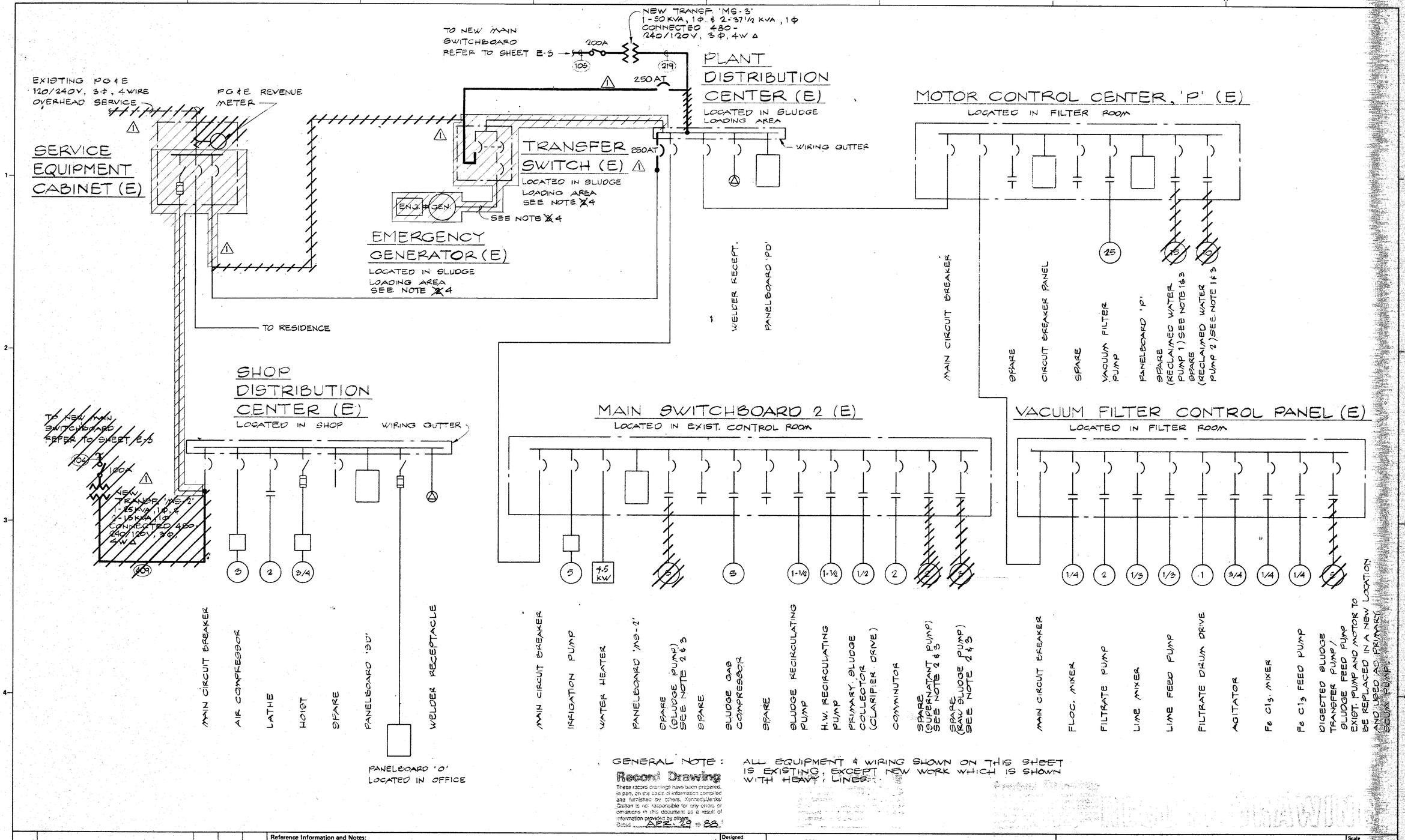

GENERAL NOTE: ALL EQUIPMENT & WIRING SHOWN ON THIS SHEET IS EXISTING, EXCEPT NEW WORK WHICH IS SHOWN WITH HEAVY LINES.

Record Drawing

These record drawings have been prepared, in part, on the basis of information compiled and furnished by others. Kennedy/Jenks/Chilton is not responsible for any errors or omissions in this document as a result of information provided by others.

Dated APR 29 19 88

Revised	Description	Submit.	Appr'd.	Date
1	CO NO. 15			

Refer to Tracing for Latest Revision

Reference Information and Notes:

1. TO BE DISCONNECTED AND ABANDONED IN PLACE.
2. TO BE REMOVED AND DELIVERED TO OWNER.
3. ABANDON CONDUIT AND CONDUCTORS IN PLACE.
4. TO BE LEFT IN PLACE AND REUSED

Designed	RDB
Drawn	WL
Checked	JWS
Date	1/29/81

Wastewater Plant Improvements C-06-2464
Sausalito - Marin City Sanitary District

Kennedy/Jenks Engineers San Francisco

Submitted: Approved:

SINGLE LINE DIAGRAM 2

Scale NONE
Job No. 0112
Sheet E-4 of

87

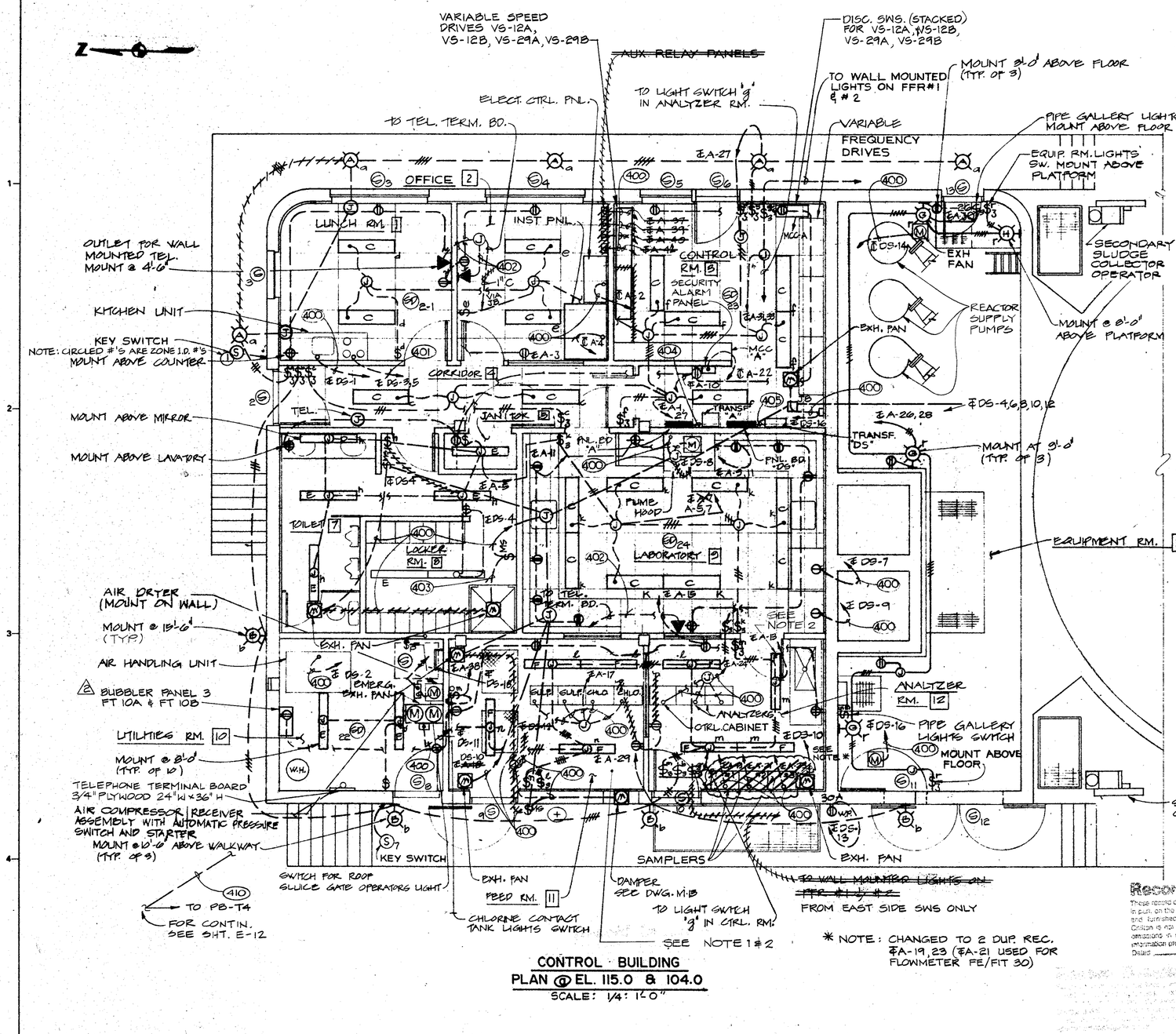

CONTROL BUILDING
PLAN @ EL. 115.0 & 104.0
SCALE: 1/4" = 1'-0"

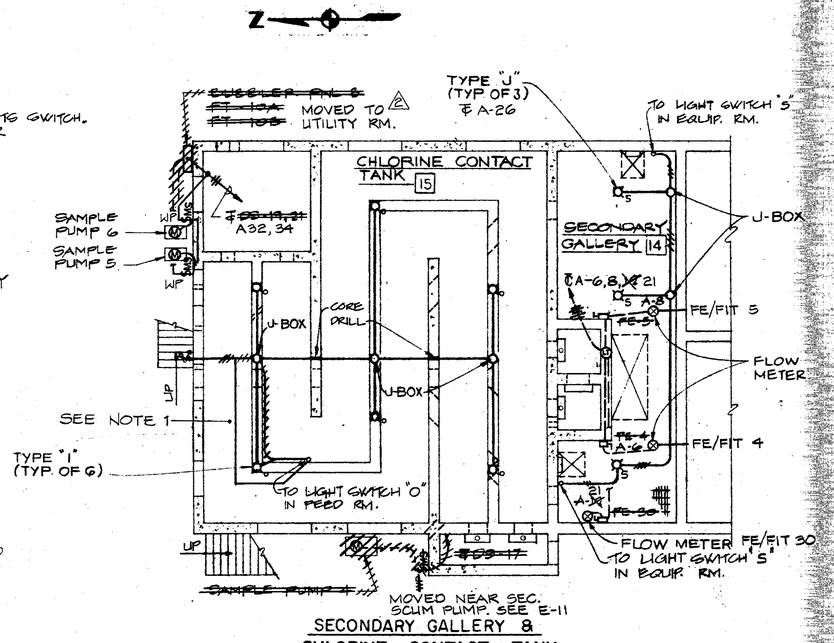

SECONDARY GALLERY & CHLORINE CONTACT TANK
PLAN @ EL. 89.0 & 101.0
SCALE: 1/8" = 1'-0"

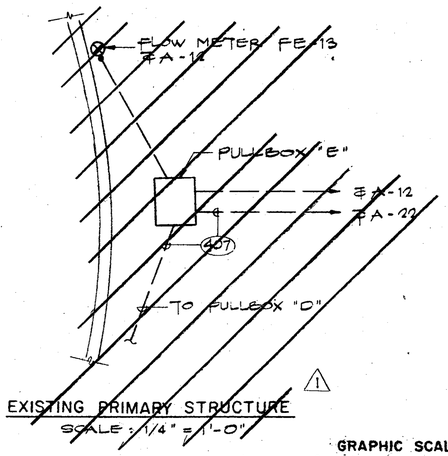

EXISTING PRIMARY STRUCTURE
SCALE: 1/4" = 1'-0"

Record Drawing
These record drawings have been prepared, in part, on the basis of information compiled and furnished by others. Kennedy/Jenks/Chilton is not responsible for any errors or omissions in this document as a result of information provided by others.
Dated APR. 29, 19 88

GRAPHIC SCALE
1/4"= 1'-0" 0 4 8 12
1/8"= 1'-0" 0 5 10 15 20 25

Revised	Description	Submit.	Appr'd.	Date
3	FIELD CHANGE			
2	CO NO. 53			
1	CO NO. 16			

Refer to Tracing for Latest Revision

Reference Information and Notes:
1. RM. 15 CORROSIVE ATMOSPHERE. PROVIDE CONDUIT SEAL FOR EVERY CONDUIT THAT LEAVES THE BLDG.
2. MOUNT TYPE "F" LT. FIXTURE 9'-0" ABOVE FLOOR.
3. NUMEROUS FIELD CHANGES WITHIN CONTROL BUILDING NOT DESIGNATED BY 3.

Designed AA
Drawn WL/LCS
Checked JWS
Date 1/29/81

Wastewater Plant Improvements C-06-2464
Sausalito - Marin City Sanitary District
Kennedy/Jenks Engineers San Francisco
Submitted: Walter E. Grossman 09370 Approved: R. Bob J. Chilton

LIGHTING PLANS I

Scale AS NOTED
Job No. 0112
Sheet E-5 of

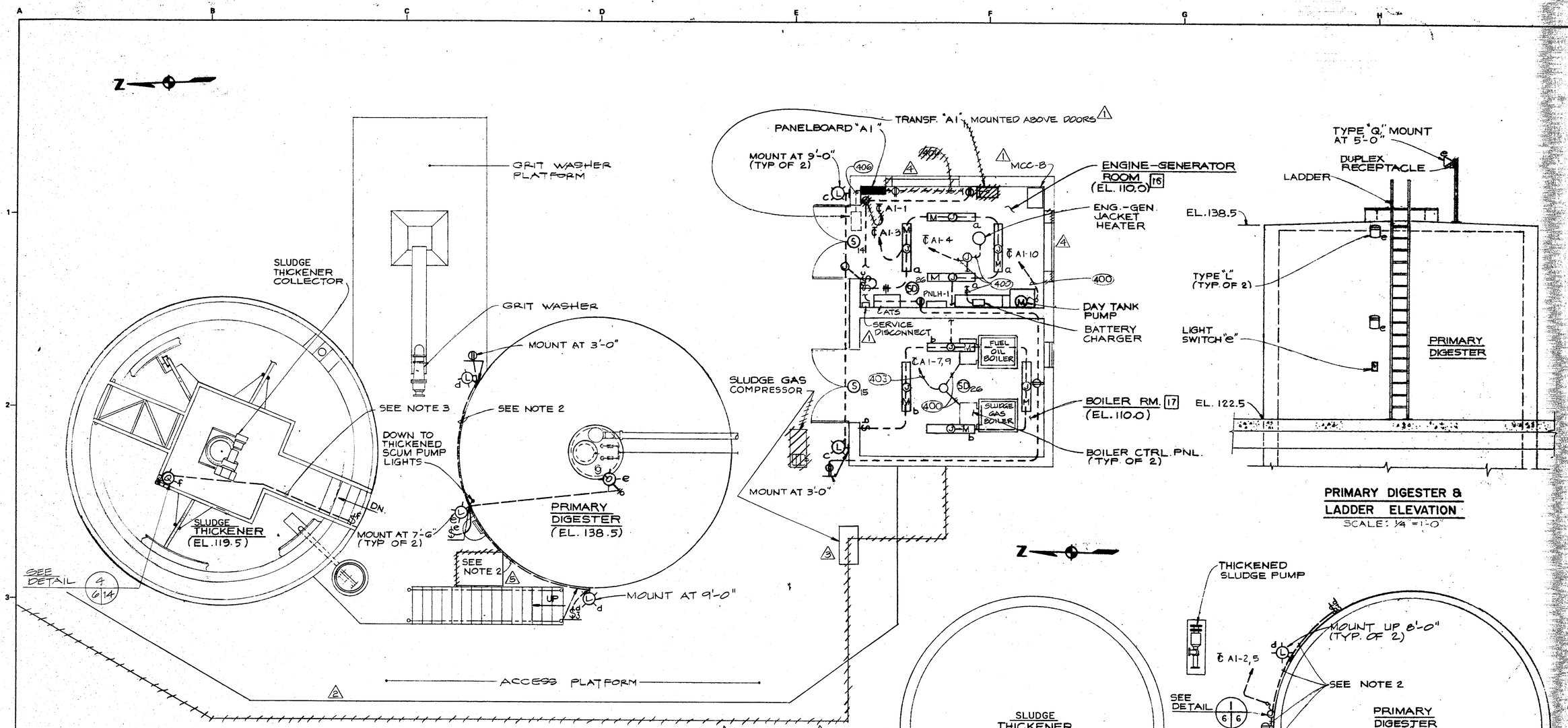

SLUDGE THICKENER, PRIMARY DIGESTER & ENGINE GENERATOR BLDG. PLAN
SCALE: 1/4" = 1'-0"

PRIMARY DIGESTER & LADDER ELEVATION
SCALE: 1/4" = 1'-0"

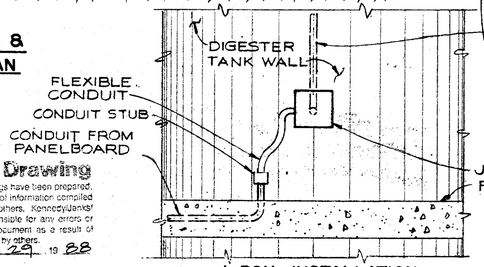

J-BOX INSTALLATION DETAIL 1 6 6
NO SCALE

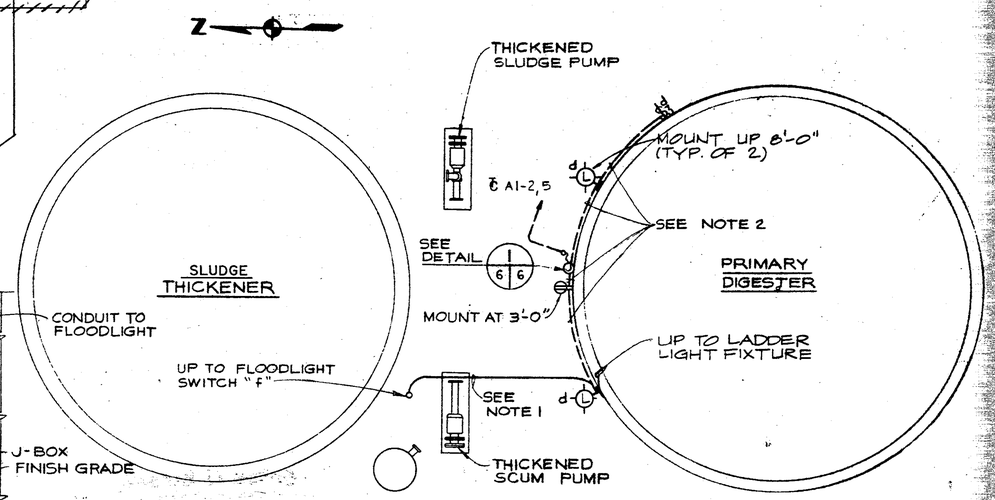

SLUDGE THICKENER, PRIMARY DIGESTER PLAN @ EL. 110.0
SCALE: 1/4" = 1'-0"

GRAPHIC SCALE 1/4" = 1'-0" 0 4 8 12

Record Drawing
These record drawings have been prepared, in part, on the basis of information compiled and furnished by others. Kennedy/Jenks/Chilton is not responsible for any errors or omissions in this document as a result of information provided by others.
Dated APR. 29, 19 88

RECORD DRAWING

Revised	Description	Submit.	Appr'd.	Date
5	FIELD CHANGE			
4	CO NO. 50			
3	CO NO. 35			
2	CO NO. 23			
1	CO NO. 12			

Refer to Tracing for Latest Revision

Reference Information and Notes:
1. RUN & SUPPORT CONDUIT ON UNDERSIDE OF DEGRITTER PLATFORM.
2. CONCEAL CONDUIT IN PRIMARY DIGESTER WALL.
3. RUN & SUPPORT CONDUIT ON UNDERSIDE OF WALKWAY.

Designed A.A.
Drawn CB/LCS
Checked JWS
Date 1/29/81

Wastewater Plant Improvements C-06-2464
Sausalito - Marin City Sanitary District
Kennedy Jenks Engineers San Francisco
Submitted: Walter F. Hassman C9370
Approved: Robert J. Anderson

LIGHTING PLANS 2

Scale AS NOTED
Job No. 0112
Sheet E-6 of

89

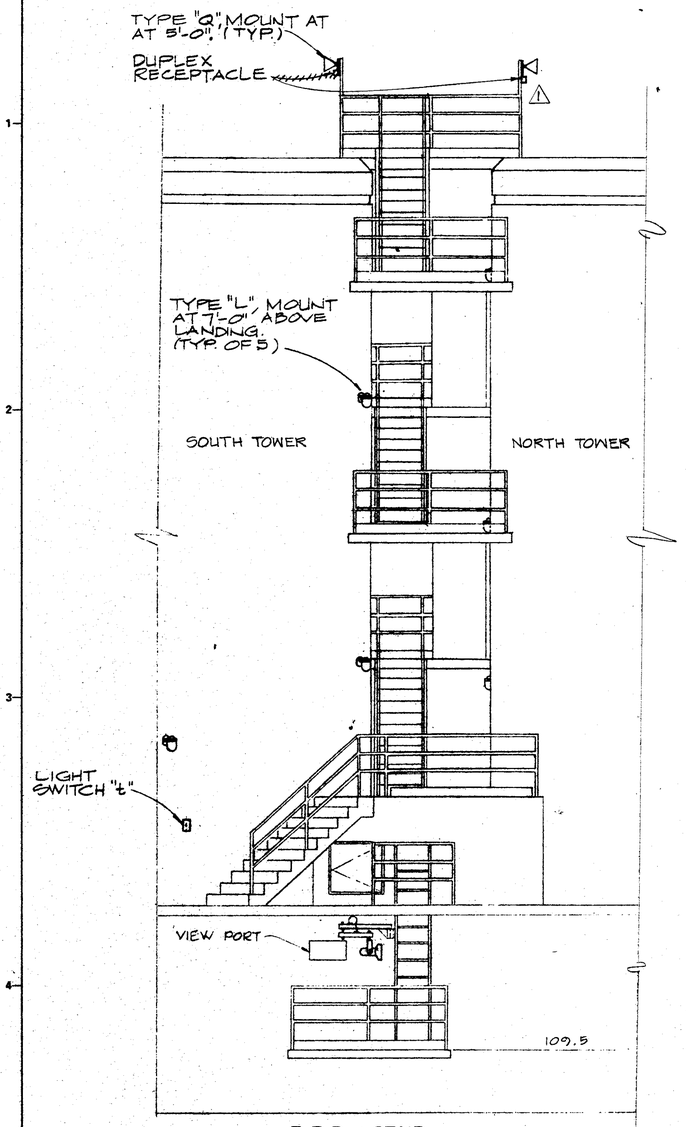

F. F. R. STAIR
EAST ELEVATION
SCALE: 1/4" = 1'-0"

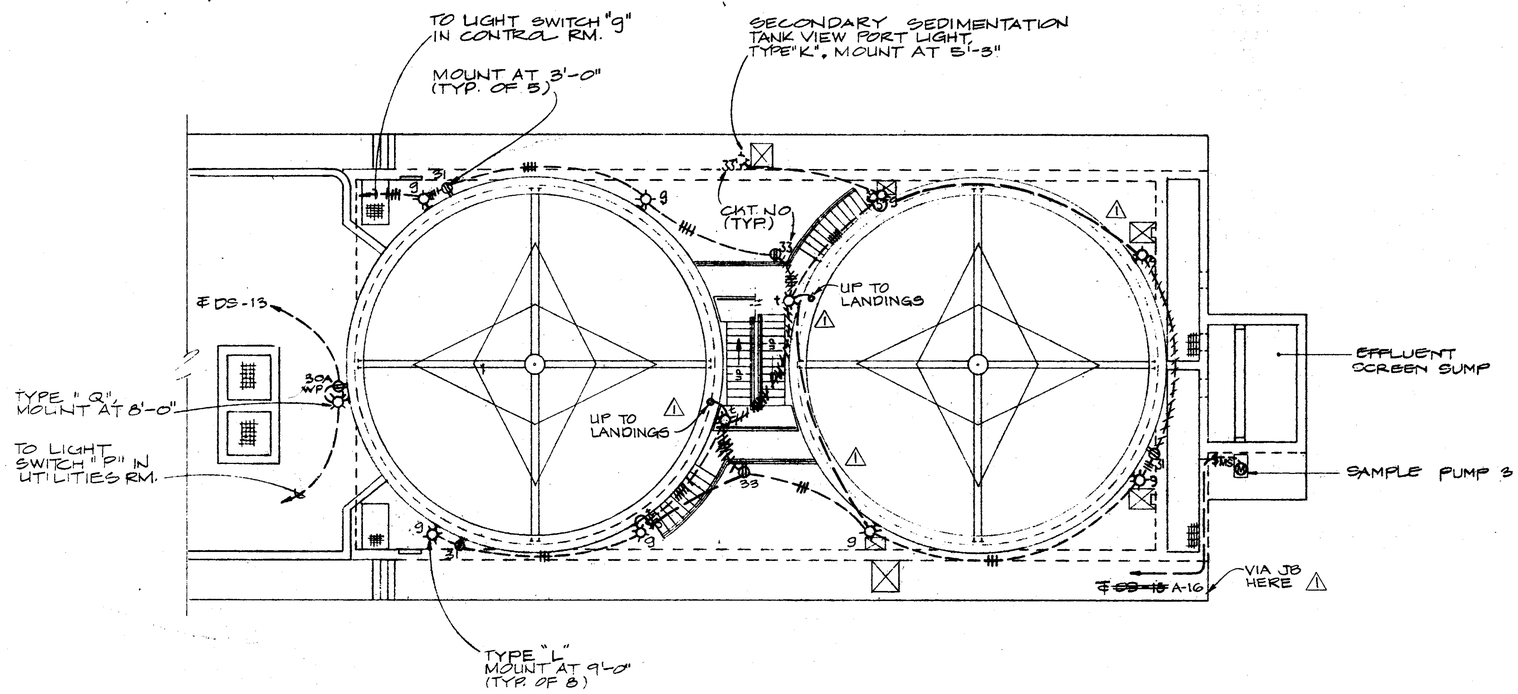

FIXED FILM REACTORS PLAN
SCALE: 1/8" = 1'-0"

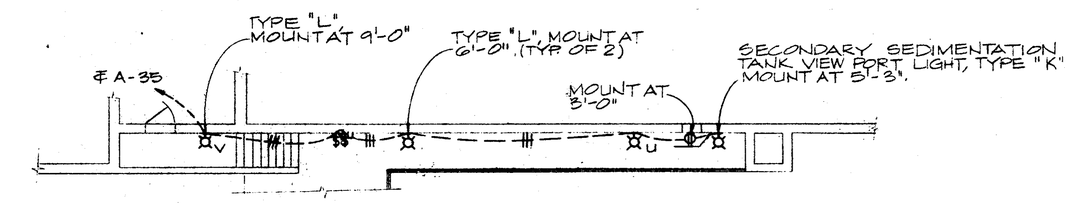

WEST SIDE WALKWAY
PLAN @ EL. 109.5
SCALE: 1/8" = 1'-0"

GRAPHIC SCALE
1/4" = 1'-0" 0 4 8 12
1/8" = 1'-0" 0 5 10 15 20 25

Revised	Description	Submit.	Appr'd.	Date
1	FIELD CHANGE			

Refer to Tracing for Latest Revision

Reference Information and Notes:

Record Drawing
These record drawings have been prepared, in part, on the basis of information compiled and furnished by others. Kennedy/Jenks Chilton is not responsible for any errors or omissions in this document as a result of information provided by others.
Dated APR. 29, 1988

Designed AA
Drawn WL/LCS
Checked JWS
Date 1/29/81

Wastewater Plant Improvements C-06-2464
Sausalito - Marin City Sanitary District
Kennedy/Jenks Engineers San Francisco
Submitted: Walter F. Garsina C9370
Approved: Robert J. Verney

LIGHTING PLANS 3

Scale AS NOTED
Job No. 0112
Sheet E-7 of

90

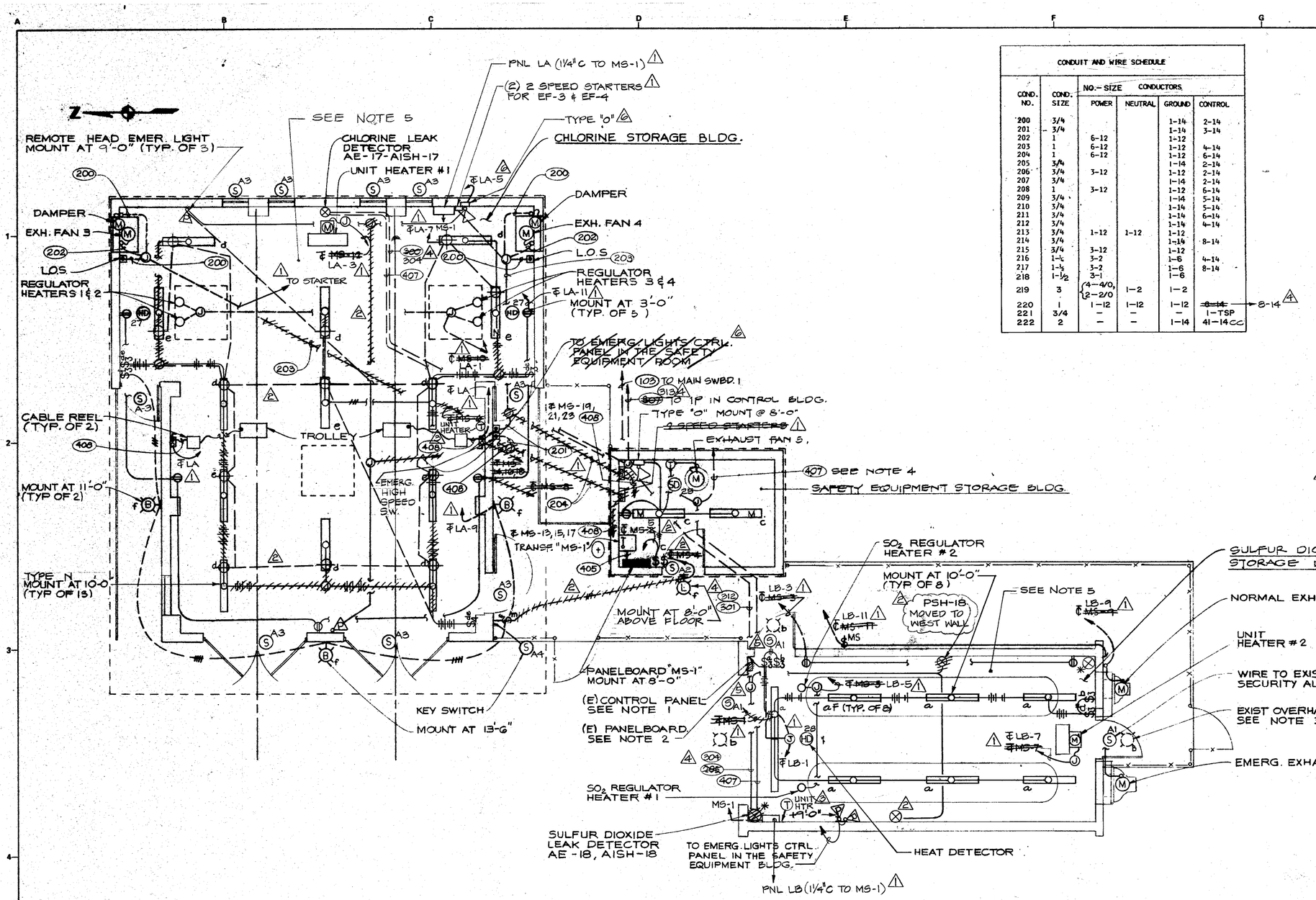

CHLORINE & SULFUR STORAGE & SAFETY EQUIPMENT BLDGS. PLAN

SCALE: 1/4"=1'-0"

* - MOVED TO SE CORNER

CONDUIT AND WIRE SCHEDULE

COND. NO.	COND. SIZE	NO.-SIZE CONDUCTORS POWER	NEUTRAL	GROUND	CONTROL
200	3/4			1-14	2-14
201	3/4			1-14	3-14
202	1	6-12		1-12	
203	1	6-12		1-12	4-14
204	1	6-12		1-12	6-14
205	3/4			1-14	2-14
206	3/4	3-12		1-12	2-14
207	3/4			1-14	2-14
208	1	3-12		1-12	6-14
209	3/4			1-14	5-14
210	3/4			1-14	5-14
211	3/4			1-14	6-14
212	3/4			1-14	4-14
213	3/4	1-12	1-12	1-12	
214	3/4			1-14	8-14
215	3/4	3-12		1-12	
216	1-¼	3-2		1-6	4-14
217	1-½	3-2		1-6	8-14
218	1-½	3-1		1-6	
219	3	{4-4/0, 2-2/0	1-2	1-2	
220	1	1-12	1-12	1-12	~~6-14~~ → 8-14 (4)
221	3/4	—	—	—	1-TSP
222	2	—	—	1-14	41-14CC

CONDUIT AND WIRE SCHEDULE

COND. NO.	COND. SIZE	NO.-SIZE CONDUCTORS POWER	NEUTRAL	GROUND	CONTROL
300	3/4			1-14	2-14
301	3/4			1-14	4-14
302	1			1-14	8-14
303	3/4			1-14	4-14
304	3/4				1-TSP
305	3/4			1-14	2-14
306	3/4			1-14	5-14
307	3/4			1-14	6-14
308	3/4			1-14	7-14
309	1			1-14	6-14
310	1"¢			1-14	25-14
311	3/4"			1-14	7-14
312	3/4				2-TSP
**399	2"	—	—	—	—

(4) ** CONDUIT FOR FIRE/SECURITY WIRING

CONDUIT AND WIRE SCHEDULE

COND. NO.	COND. SIZE	NO.-SIZE CONDUCTORS POWER	NEUTRAL	GROUND	CONTROL
400	3/4"	1-12	1-12	1-12	-
401	1-¼"	2-4	1-4	1-8	-
*402	3/4"	-	-	-	-
403	3/4"	2-12	1-12	1-12	-
404	2"	3-1	1-1	1-6	-
405	2"	3-1	1-1	1-6	-
406	1-1/4"	3-4	1-4	1-8	-
407	3/4"	1-12	1-12	1-12	-
408	3/4"	3-12	-	1-12	-
409	2"	{2-3/0, 1-1/0	1-6	1-2	
*410	2"	-	-	-	-
*411	1"	-	-	-	-
**412	1"	-	-	-	-

* EMPTY CONDUIT. WIRES TO BE PROVIDED BY PT & T CO.

(7) ** CONDUIT FOR CABLE TV SERVICE

(4) CONDUIT AND WIRE SCHEDULE

COND. NO.	COND. SIZE	NO.-SIZE WIRES POWER	NEUTRAL	GROUND	CONTROL
250	1½"	7-12	1-12	3-12	14-14
251	2½"	15-12	—	5-12, 3-14	45-14
252	3"	24-12	3-12	10-12, 3-14	59-14
253	1½"	6-12	—	2-12, 1-14	17-14
254	2"	12-12	—	4-12, 1-14	33-14
255	2½"	39-12	3-12	15-12	—
256	3"	—	—	4-14	97-14
257	1"	3-12	3-12	8-12	—
258	1"	6-12	—	2-12	4-14
259	1½"	—	—	1-14	29-14
260	2"	15-12	—	5-12, 1-14	32-14
261	2"	15-12	—	5-12, 1-14	32-14
262	1½"	—	—	—	—
263	1½"	—	—	1-14	24-14

(4) CONDUIT AND WIRE SCHEDULE

COND. NO.	COND. SIZE	NO.-SIZE WIRES POWER	NEUTRAL	GROUND	CONTROL
313	3/4"	—	—	—	3-TSP
314	1"	—	—	—	4-TSP
316	1"	—	—	—	6-TSP
319	1½"	—	—	—	9-TSP
321	2"	—	—	—	14 ~~2K~~-TSP (7)
322	2"	—	—	—	18-TSP
323	3/4"	—	—	—	—
324	2"	—	—	—	17-TSP
325	1½"	—	—	—	10-TSP
326	1½"	—	—	—	12-TSP

GRAPHIC SCALE

1/4"=1'-0" 0 4 8 12

Record Drawing

These record drawings have been prepared, in part, on the basis of information compiled and furnished by others. Kennedy/Jenks/Chilton is not responsible for any errors or omissions in this document as a result of information provided by others.

Dated Aug. 24, 1981

RECORD DRAWING

Revised	Description	Submit.	Appr'd.	Date
(7)	CO NO. 59			
(6)	CO NO. 26			
(5)	CO NO. 60			
(4)	CO NO. 16			
(3)	CLARIFICATION			
(2)	FIELD CHANGE			
(1)	CO NO. 7			

Refer to Tracing for Latest Revision

Reference Information and Notes:

1. TO BE ABANDONED IN PLACE.
2. TO BE REMOVED AND DELIVERED TO OWNER.
3. CONNECT TO LIGHT CKT. ℄ MS-1.
4. TO CONTROL BUILDING PANELBOARD "A", CONNECT TO ℄A-22
5. BLDG. IS CORROSIVE ATMOSPHERE. PROVIDE CONDUIT SEAL FOR EVERY CONDUIT THAT LEAVES THE BLDG.

Designed	A.A
Drawn	WL/LS
Checked	JWS
Date	1/29/81

Wastewater Plant Improvements C-06-2464
Sausalito - Marin City Sanitary District
Kennedy/Jenks Engineers San Francisco
Submitted: Walter F. Workman C9370 Approved: Robert J. Lewis

LIGHTING & POWER PLAN

Scale 1/4" = 1'-0"
Job No. 0112
Sheet E-8 of

91

CONDUIT AND WIRE SCHEDULE

COND. NO.	COND. SIZE	NO-SIZE CONDUCTORS POWER	NEUTRAL	GROUND	CONTROL	
100	4"	-	-	-	-	
101	4"	-	-	-	-	
102	3"	3-250	-	1-1/0	-	
103	1	3-6	-	1-8	-	1
104	2	2-1, 1-4	-	1-6	-	
105	3	2-4/0, 1-2/0		1-6		
106	3	3-350		1-1/0		
107	1-1/2	3-2		1-8	8-14	
108	1-1/2	3-2		1-8	8-14	
109	1-1/2	3-2		1-8	8-14	
110	1	3-6		1-6		
111	3/4	3-12		1-12		
112	3	3-250		1-1/0		
113	3	3-250		1-1/0		
114	1	3-12		1-12	8-14	1
115	2	—	—	—	—	
116	3	—	—	—	—	
117						
118						
119	3/4	3-12		1-12	2-14	
120	3/4	3-12		1-12	2-14	
121	1	3-12		1-12	5-14	
122	3/4	3-12		1-12	2-14	
123	3/4	3-12		1-12	2-14	
124	1	3-12		1-12	5-14	
125	1	3-12		1-12	4-14	
126	1	3-12		1-12	8-14	1
127	1	3-12		1-12	8-14	
128	1	3-12		1-12	6-14	
129	1	3-12		1-12	6-14	
130	1	3-12		1-12	4-14	
131	1	3-12		1-12	5-14	1
132	1	3-12		1-12	5-14	
133	1	3-12		1-12	5-14	
134	3/4	3-12		1-12	3-14	
135	3/4	3-12		1-12	3-14	
136	3/4	3-12		1-12	3-14	
137	3/4	3-12		1-12	3-14	
138	3/4	3-12		1-12	3-14	
139	3/4	3-12		1-12	2-14	
140	3/4	3-12		1-12	2-14	
141	3/4	3-12		1-12	—	
142	3/4	3-12		1-12	—	
143	1	3-6		1-6	—	
144	1	3-6		1-6	—	
145	3/4	3-12		1-12	—	
146	3/4	3-12		1-12	2-14	
147	3/4	3-12		1-12	2-14	

* EMPTY CONDUIT WIRES TO BE PROVIDED BY PG&E CO.

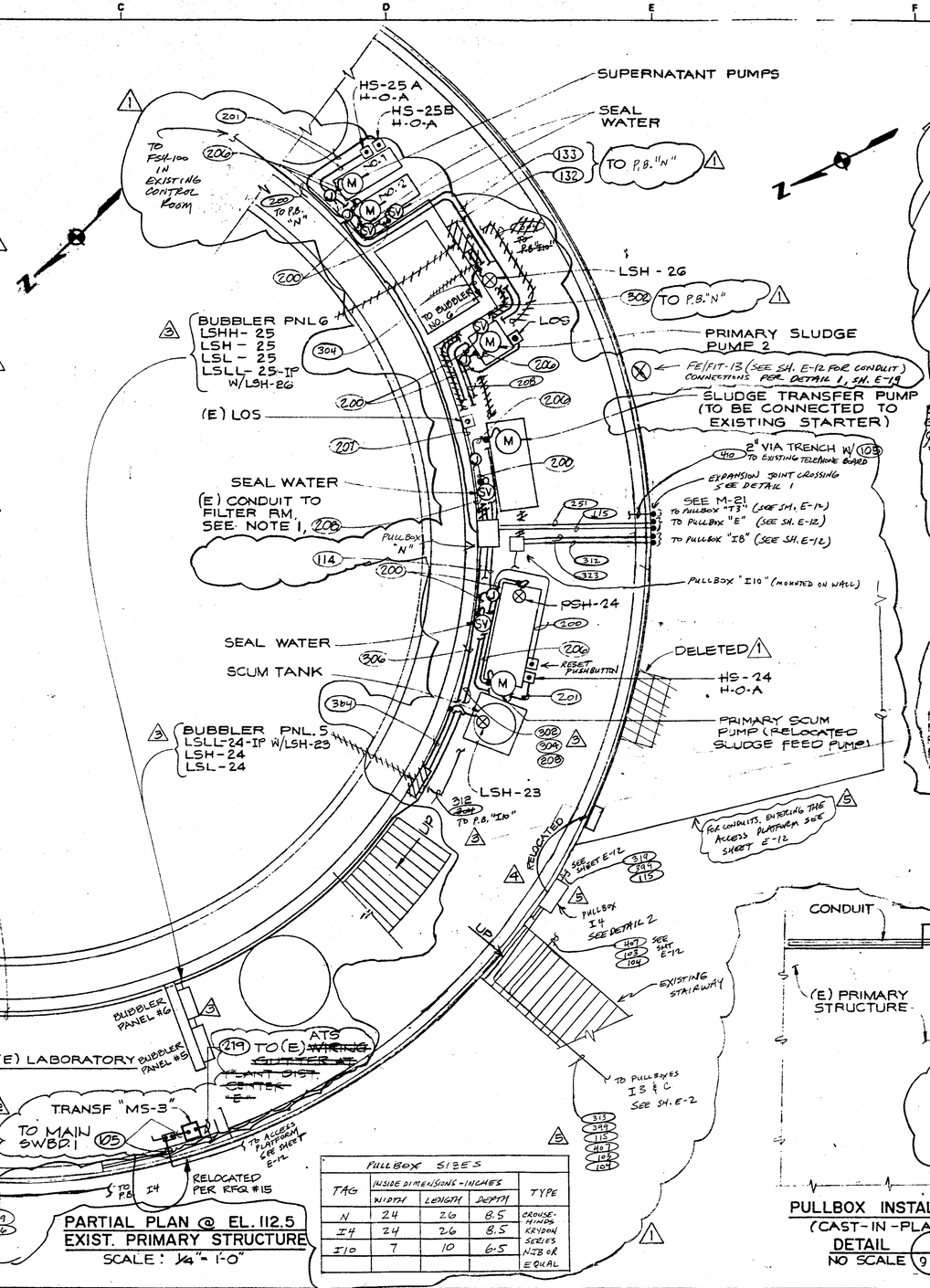

PULLBOX SIZES				
TAG	INSIDE DIMENSIONS - INCHES WIDTH	LENGTH	DEPTH	TYPE
N	24	26	8.5	CROUSE-HINDS KRYDON SERIES NJB OR EQUAL
I4	24	26	8.5	
I10	7	10	6.5	

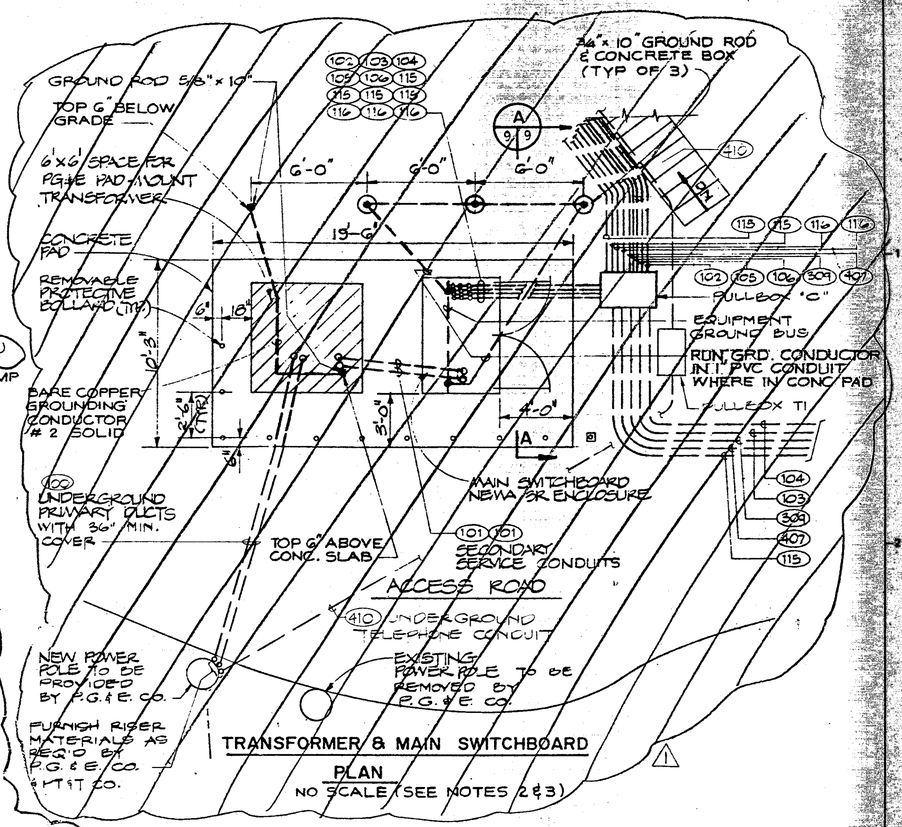

TRANSFORMER & MAIN SWITCHBOARD PLAN
NO SCALE (SEE NOTES 2 & 3)

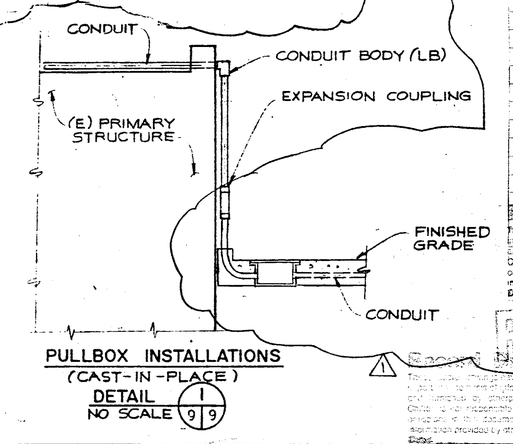

PULLBOX INSTALLATIONS (CAST-IN-PLACE)
DETAIL 1 (9|9)
NO SCALE

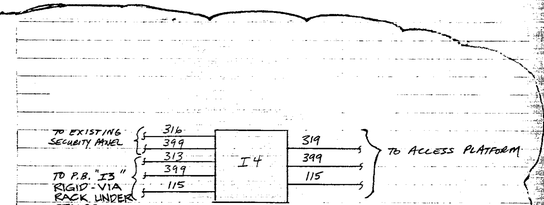

Record Drawing
These record drawings have been prepared, in part, on the basis of information compiled and furnished by others. Kennedy/Jenks/Chilton is not responsible for any errors or omissions in this document as a result of information provided by others.
Dated APRIL 23, 1982
DETAIL 2 (9|9)

RECORD DRAWING

GRAPHIC SCALE
1/4"=1'-0" 0 5 10

Revised	Description	Submit.	Appr'd.	Date
5	CO NO. 59			
4	FIELD CHANGE			
3	CO NO. 45			
2	CO NO. 15			
1	CO NO. 16			

Refer to Tracing for Latest Revision

Reference Information and Notes:
1. PROVIDE NEW WIRES IN THE EXISTING CONDUIT TO THE EXISTING STARTER IN THE VACUUM FILTER CONTROL PANEL.
2. THERE IS A ROCK NEAR GROUND SURFACE. DRILLING MAYBE NECESSARY TO INSTALL GROUND RODS.
3. FOR GROUND CONDUCTOR SIZES SEE GROUNDING SYSTEM SCHEMATIC SH. E-2.

Designed RDS/AA
Drawn AYS/LCS
Checked JWS
Date 1/29/81

Wastewater Plant Improvements C-06-2464
Sausalito-Marin City Sanitary District
Kennedy/Jenks Engineers San Francisco
Submitted: Walter Silverman 09370 Approved: R. Reid J. Green

POWER PLANS 1

Scale 1/4"=1'-0"
Job No. 0112
Sheet E-9 of

92

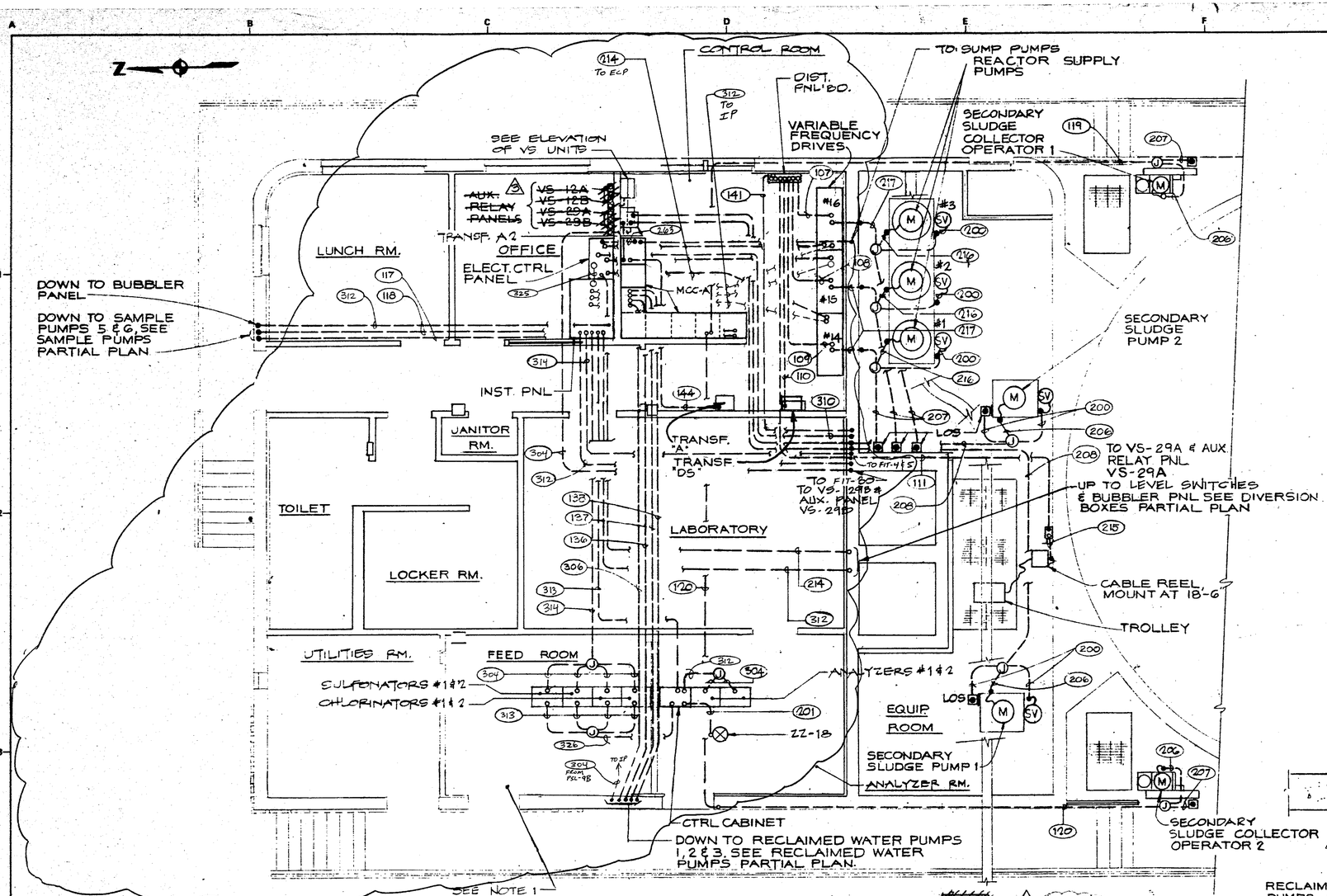

CONTROL BUILDING
PLAN @ EL. 115.0 & 104.0
SCALE: 1/4" = 1'-0"

NOTE: FOR CONDUITS ENTERING THE CONTROL BUILDING FROM THE ACCESS PLATFORM REFER TO SH. E-12, DETAIL 2. FOR CLARITY, THESE CONDUITS ARE NOT SHOWN HERE.

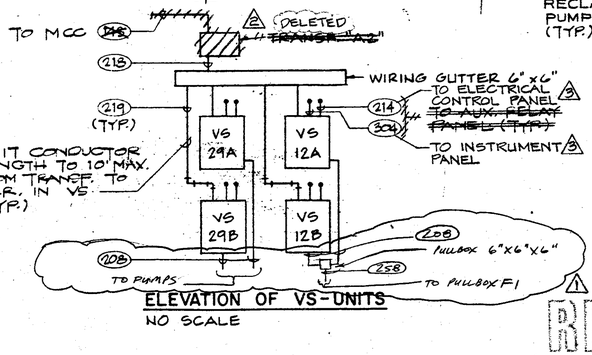

ELEVATION OF VS-UNITS
NO SCALE

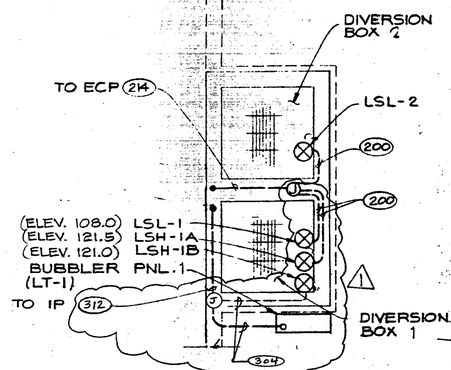

PARTIAL PLAN @ EL. 128.0
DIVERSION BOXES
SCALE: 1/4" = 1'-0"

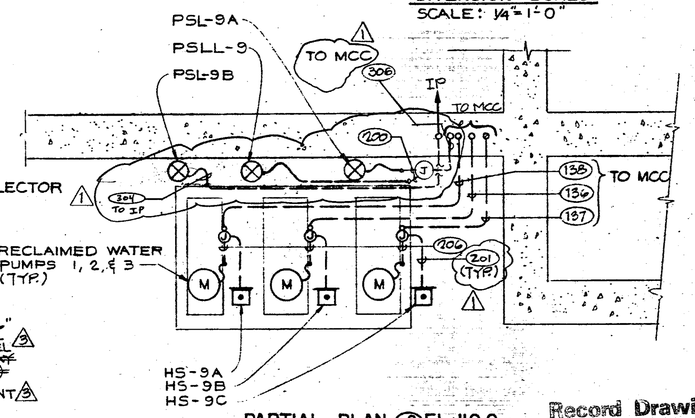

PARTIAL PLAN @ EL. 110.0
RECLAIMED WATER PUMPS
SCALE: 1/2" = 1'-0"

Record Drawing

* These record drawings have been prepared, in part, on the basis of information compiled and furnished by others, Kennedy/Jenks/Chilton is not responsible for any errors or omissions in the document as a result of information provided by others.

Dated APR. 29, 19 88

RECORD DRAWING

GRAPHIC SCALE
1/2" = 1'-0"
1/4" = 1'-0"

Revised	Description	Submit.	Appr'd.	Date
3	FIELD CHANGE			
2	CO NO. 25			
1	CO NO. 16			
	Refer to Tracing for Latest Revision			

Reference Information and Notes:
1. RM. IS CORROSIVE ATMOSPHERE. PROVIDE CONDUIT SEAL FOR CONDUIT THAT LEAVES THE BLDG.

Designed RDS/AA
Drawn AYS/LCS
Checked
Date 1/29/91

Wastewater Plant Improvements C-06-2464
Sausalito - Marin City Sanitary District

Kennedy/Jenks Engineers San Francisco

Submitted: Walter F. Chamma 15370 Approved: Robert J. Ames

POWER PLANS 2

Scale AS NOTED
Job No. 0112
Sheet E-10 of

99

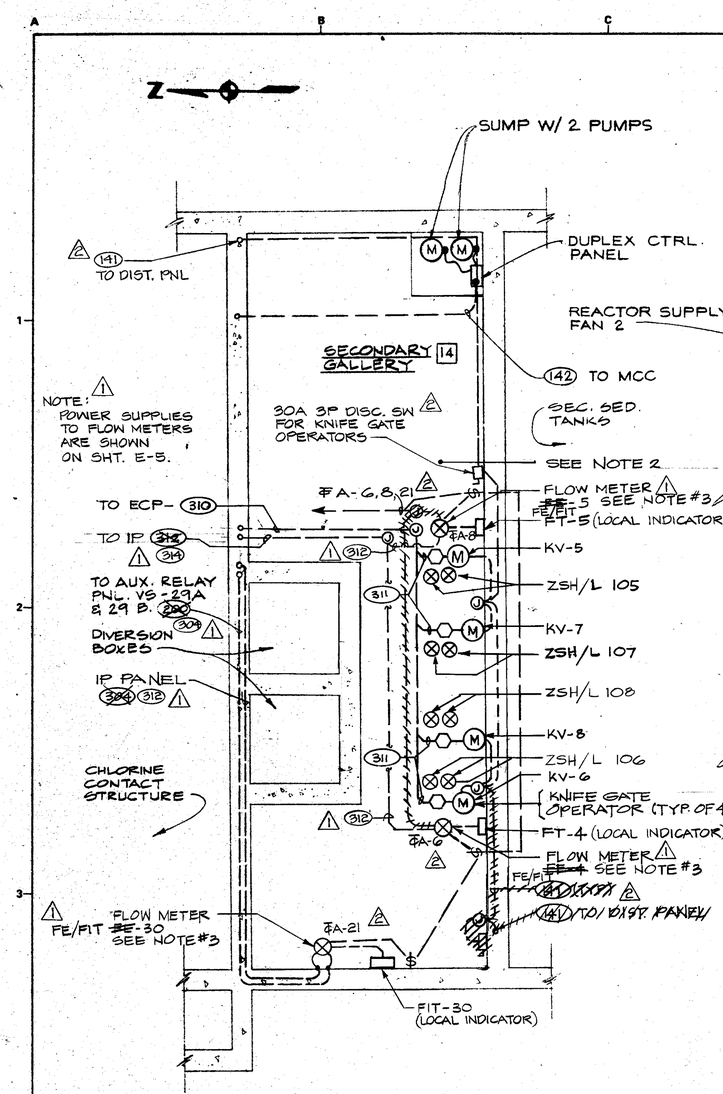

PARTIAL PLAN @ EL. 89.0
SECONDARY GALLERY
SCALE: 1/4"=1'-0"

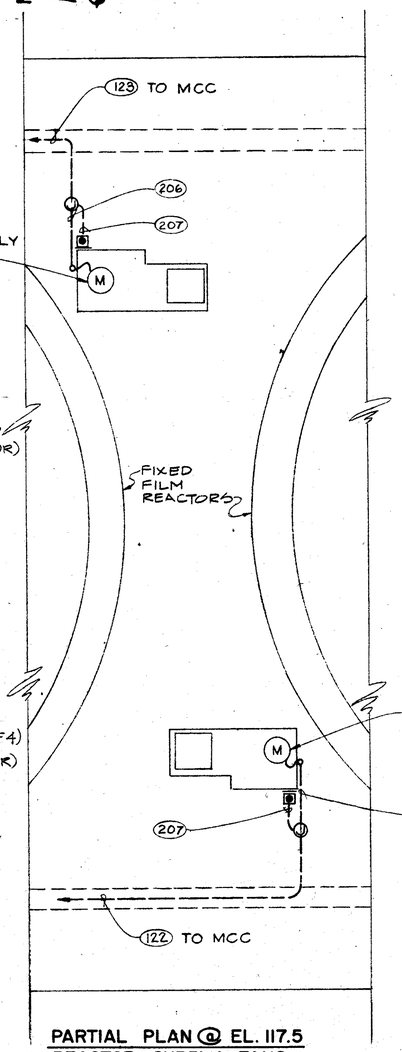

PARTIAL PLAN @ EL. 117.5
REACTOR SUPPLY FANS
SCALE: 1/4"=1'-0"

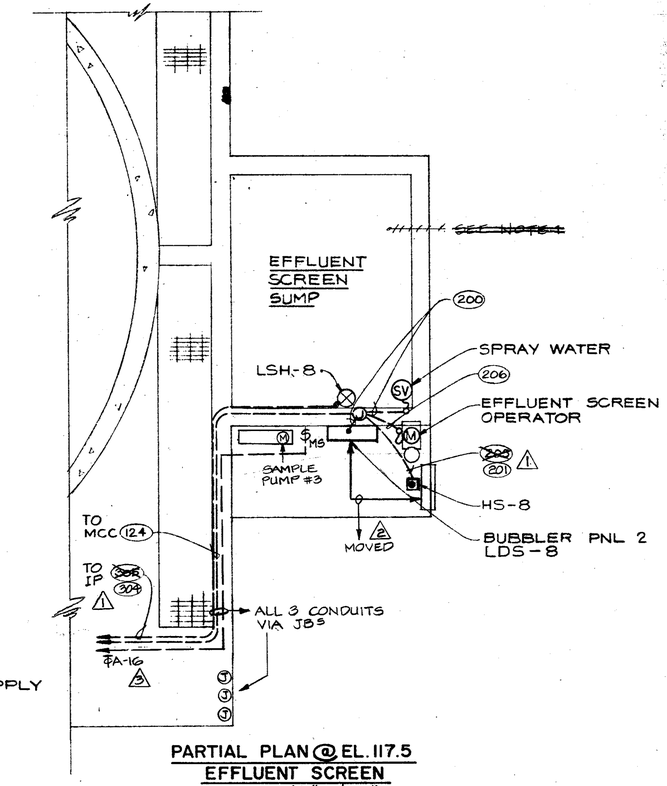

PARTIAL PLAN @ EL. 117.5
EFFLUENT SCREEN
SCALE: 1/4"=1'-0"

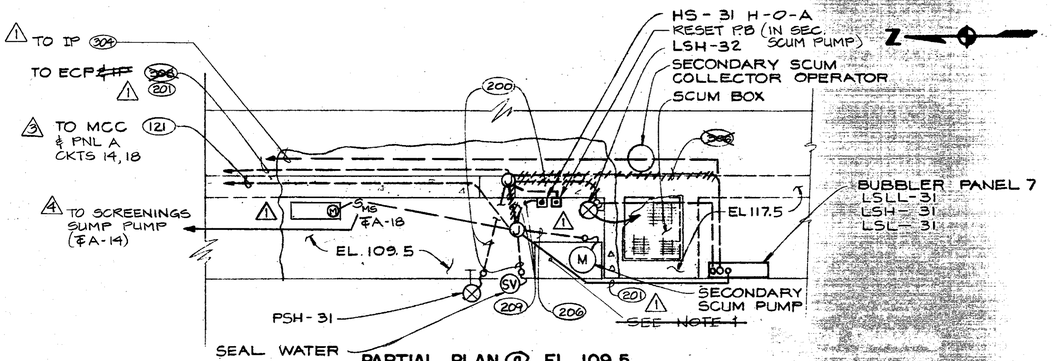

PARTIAL PLAN @ EL. 109.5
SAMPLE & SECONDARY SCUM PUMPS
SCALE: 1/4"=1'-0"

Record Drawing
These record drawings have been prepared, in part, on the basis of information compiled and furnished by others. Kennedy/Jenks/Chilton is not responsible for any errors or omissions in this document as a result of information provided by others.
Dated APR. 29, 19 88

RECORD DRAWING

GRAPHIC SCALE
1/4" = 1'-0"
0 5 10

Revised	Description	Submit.	Appr'd.	Date
4	CO NO. 24			
3	CO NO. 57			
2	FIELD CHANGE			
1	CO NO. 16			

Refer to Tracing for Latest Revision

Reference Information and Notes:
1. HAZARDOUS LOCATION, CLASS I, DIV. I, GROUPS C&D. PROVIDE CONDUIT SEAL FOR EVERY CONDUIT THAT LEAVES THE BLDG.
2. AREA IS DAMP LOCATION.
3. FOR FLOW METER DETAIL SEE SHT. E-19.

Designed	RDS/AA
Drawn	AYS/LCS
Checked	JWS
Date	1/29/91

Wastewater Plant Improvements C-06-2464
Sausalito - Marin City Sanitary District
Kennedy/Jenks Engineers San Francisco
Submitted: C9370 Approved:

POWER PLANS 3

Scale 1/4"=1'-0"
Job No. 0112
Sheet E-11 of

94

PRIMARY SEDIMENTATION TANK (EXIST.)

ENGINE GENERATOR RM

PRIMARY DIGESTER

SLUDGE THICKENER

SLUDGE THICKENER COLLECTOR

GRIT WASHER PLATFORM

GRIT WASHER

ON-OFF SELECTOR SWITCH

PANELBOARD A-1

INTAKE LOUVER

CONC. PAD

MCC B

EXHAUST LOUVER

GENERATOR INERTIA FRAME & CONC. SLAB

VIBRATION ISOLATORS

100 KW ENGINE-GENERATOR

BATTERIES

PANEL H-1

CHARGER

ATS

BAT. TANK

H.W. CIRC. PUMPS

BOILER ROOM

XFMR A-1 MOUNT ABOVE DOOR. KEEP SEC. TO PNLBD. A-1 10' LG. MAX.

SERVICE ENTRANCE SWITCH (NON-AUTO BREAKER)

TO MCC-B

TO NEW TEL. CAB. IN EXIST. PRI. STRUCTURE REF. SHT. E-9

CADWELD TO COLUMN BAR

#4/0 BARE COPPER GROUND

4" CONC. PAD

4" CONC. PAD

24" LOOP IN PRI. COMPARTMENT

PG & E. PAD MOUNT TRANSFORMER (225 KVA)

CONC. ENCASEMENT UNDER DECK

#2 BARE COPPER GROUND

5/8" x 8'-0" GROUND ROD (TYP. OF 2)

GROUND ROD BOX (TYP. OF 3)

3/4" x 8'-0" GROUND ROD

CONC. ENCASEMENT UNDER DECK

WSH-19-2
WSH-19-1

HS-19
F-O-R

RESET PUSHBUTTON

PULLBOX "T3"

PULLBOX "E-9"

PULLBOX "E-10"

PULLBOX "I-5"

PULLBOX "E-11" AT GRIT WASHER PLATFORM

PULLBOX "X" E-8 AT ACCESS PLATFORM

DOWN COLUMN TO PULLBOX "L"

TO THICKENER SLUDGE & SCUM PUMPS

TO PULLBOX "I-9"

TO LSH-20

TO PULLBOX "E-11"

TO PULLBOX "E-7"

TO PULLBOX "I-4" REF: SHEET E-9

TO YORK MCC REF: SHEET E-9

TO PULLBOX C IN ACCESS PLAT REF: SHEET E-12

TO PULLBOX S1 IN ACCESS PLAT REF: SHEET E-12

SEAL WATER SLUDGE CIRC PUMP #1

SEAL WATER SLUDGE CIRC PUMP #2

SLUDGE GAS COMPRESSOR PSL-33 HS-33 START-STOP PB TSH-33

POTABLE WATER PUMPS

TO LEVEL PROBES (WIRE & CONDUIT BY OTHERS)

ACCESS PLATFORM

HYDRO TANK

TO SOLENOID VALVE & PRESSURE SWITCHES

CONTROL BUILDING

SLUICE GATE OPERATOR

SLUICE GATE STEM

CURB TO CONCRETE CONDUIT BEND AS REQUIRED

STUB-UP WHERE REQUIRED

WALKWAY GRATING

PULLBOX

ACCESS PLATFORM

EXPANSION/DEFLECTION COUPLING

EMBEDDED CONDUIT

EXPANSION JOINT CROSSING DETAIL 1/12 NO SCALE

CHLORINE CONTACT CHAMBER

FOR EXPANSION JOINT CROSSING SEE DETAIL 1

SEE DETAIL 2

OPENING (TYP.)

P.B. IG

P.B. IT2

P.B. F1

P.B. F2

P.B. E-7

P.B. E-5

PUMP

PUMP

PUMP

FIXTURE SCHEDULE

FIXTURE TYPE	LAMP NO.	LAMP TYPE	LAMP WATTS	1Ø VOLTS	MOUNTING ARRGT	DESCRIPTION	CATALOG NO.
A	1	INCAND.	150	120	~~RECESS~~	OUTDOOR, SQ. DOWNLIGHT W/ A FLAT FRESNEL LENS & GALVANIZED STEEL HOUSING.	McPHILBEN 4-811BE DEVINE LIGHTING D415-A3
B	1	INCAND.	300	120	WALL	WEATHERPROOF W/ A PRISMATIC LENS, A VANDALPROOF SHIELD & A CORROSION RESISTANT FINISH.	STONCO LINE 513-300IN
C	2	FLUOR.	35	120	RECESS	COMMERCIAL, NON-AIR HANDLING TROFFER W/ A PRISMATIC VIRGIN ACRYLIC LENS & BAKED WHITE ENAMEL FINISH.	DAY-BRITE 4G21-6X9-4 COLUMBIA 5112G
D	2	FLUOR.	35	120	WALL	COMMERCIAL W/ AN ACRYLIC DIFFUSER, ALUMINUM HOUSING & A CLEAR LACQUER FINISH.	McPHILBEN 37-80A MILLER FM-2121-04
E	1	FLUOR.	35	120	SURFACE	COMMERCIAL, WRAP-AROUND W/ A CLEAR ACRYLIC LENS & BAKED WHITE ENAMEL FINISH.	HOLOPHANE 6100-A MILLER DA-1106-04
F	1	FLUOR.	35	120	PENDANT	INDUSTRIAL, ENCLOSED & GASKETED, THERMOPLASTIC HOUSING & A HIGH-IMPACT ACRYLIC LENS.	BENJAMIN FA-2414-4R MILLER KW-2101-04
G	1	INCAND.	200	120	WALL	INDUSTRIAL, ENCLOSED & GASKETED W/ GLASS GLOBE CAST ALUMINUM GUARD & MALLEABLE IRON HOUSING.	APPLETON GSW-202-G
H	1	INCAND.	100	120	WALL	SAME AS TYPE G FIXTURE.	APPLETON GSW-102-G
I	1	INCAND.	100	120	~~SURFACE~~ PENDANT (6)	INDUSTRIAL, WATERTIGHT W/ CLEAR GLASS GLOBE & FIBERGLASS HOUSING.	CROUSE-HINDS WDA-22G
J	1	INCAND.	200	120	SURFACE	INDUSTRIAL, EXPLOSION-PROOF W/ CLEAR GLASS GLOBE & COPPER-FREE ALUMINUM GUARD.	APPLETON AC-1575
K	1	PAR	250	120	SURFACE	INDUSTRIAL, WEATHERPROOF, SPOTLIGHT W/ BRACKET ARMS, ALUMINUM HOUSING & CORROSION RESISTANT FINISH.	STONCO LINE D4440 McGILL 5300-7400
L	1	INCAND.	150	120	WALL	INDATRIAL, WEATHERPROOF W/ CLEAR GLASS GLOBE, DIE-CAST ALUMINUM HOUSING & GUARD.	HUBBELL AOWXF-11110
M	1	FLUOR.	35	120	SURFACE	INDUSTRIAL, OPEN-TYPE W/ A REFLECTOR & A BAKED WHITE ENAMEL FINISH.	COLUMBIA FS-140-M4
N	2	FLUOR.	35	120	PENDANT	SAME AS TYPE F FIXTURE.	BENJAMIN FA-2424-4R MILLER KW-2101-04
O	1	INCAND.	18	120	WALL	INDUSTRIAL, EMERGENCY LIGHT W/ A SEALED & GASKETED, NEMA 4X, ENCLOSURE.	DUAL-LITE 4X7
P	1	INCAND.	18	120	WALL	CORROSION RESISTANT, FAR-36, REMOTE EMERGENCY LIGHT HEAD.	DUAL-LITE EXT-P5-4X
Q	1	INCAND.	150	120	WALL	WEATHERPROOF, BULLET-TYPE FLOODLIGHT W/ DIE-CAST ALUMINUM HOUSING & CORROSION RESISTANT FINISH.	STONCO LINE 6700S HUBBELL S-630B
R	2	FLUOR.	35	120	SURFACE	SAME AS TYPE M FIXTURE.	COLUMBIA FI-240-M16

PANELBOARD SCHEDULE "A1"

208/120 VOLTS, 3 PHASE, 4 WIRE — 100 AMP BUS — 90 AMP MAIN CIRCUIT BREAKER — MOUNTING: ~~SURFACE~~

CKT. NO.	DESCRIPTION	CONNECTED VOLT-AMPS A	B	C	TRIP ~~AMPS~~/ POLES	CKT. NO.	DESCRIPTION	CONNECTED VOLT-AMPS A	B	C	TRIP AMPS/ POLES
1	OUTSIDE BLDG., BOILER & GENERATOR ROOM RECEPT.	1080			20/1	2	THICKENER & PRIMARY DIGESTER AREA RECEPT.	720			20/1
3	OUTSIDE BLDG., BOILER & GENERATOR ROOM LIGHTS		620		20/1	4	~~BATTERY CHARGER & JACKET HEATER~~ DAY TANK (3)		600		15/1
5	THICKENER & PRIMARY DIGESTER AREA LIGHTS			1200	20/1	6	SPARE				15/1
7	BOILER	828			15/1	8	~~SPARE~~ JACKET HEATER	X			15/~~1~~2
9	BOILER		828		15/1	10	~~DAY TANK PUMP~~ " "		~~828~~		15/~~1~~2 (3)
11	SPARE			-	20/1	12	SPARE			-	20/1
13	SPARE	-			15/1	14	SPARE	-			15/1
15	SPACE		-		1P	16	SPACE		-		1P
17	SPACE			-	1P	18	SPACE			-	1P
SUBTOTALS		1908	1448	1200				720	~~1428~~ 600	-	
PHASE TOTALS	Ø A = 2628	Ø B = 2876		Ø C = 1200							
TOTAL VOLT-AMPS	6,704										

PANELBOARD SCHEDULE "MS-1"

208/120 VOLTS, 3 PHASE, 4 WIRE — 225 AMP BUS — 150 AMP MAIN CIRCUIT BREAKER — MOUNTING: SURFACE

CKT. NO.	DESCRIPTION	CONNECTED VOLT-AMPS A	B	C	TRIP AMPS/ POLES	CKT. NO.	DESCRIPTION	CONNECTED VOLT-AMPS A	B	C	TRIP AMPS/ POLES
1	SULFUR STO. BLDG. LIGHTS	730			20/1	2	SAFETY EQUIP. BLDG. LIGHTS RECEPT. & EMERG. LIGHT	524			20/1
3	SULFUR STO. BLDG. RECEPT.		720		20/1	4	CHLORINE STO. BLDG. & SAFETY EQUIP. BLDG. OUTSIDE LIGHTS		1050	.	20/1
5	SULFUR DIOXIDE REGULATOR HEATERS			100	15/1	6	CHLORINE STO. BLDG. LIGHTS			1040	20/1
7	SULFUR STO. BLDG. UNIT HTR. 2	138			15/1	8	CHLORINE STO. BLDG. RECEPT.	1080			20/1
9	SULFUR STO. BLDG. EXH. FAN		236		15/1	10	CHLORINE REGULATOR HEATERS		200		15/1
11	SULFUR STO. BLDG. EMERG. EXH. FAN			1127	25/1	12	CHLORINE STO. BLDG. UNIT HTR. 1			138	15/1
13	CHLORINE STO. BLDG. EXH. FAN 3	480				14	HOIST & TROLLEY	1164			
15	CHLORINE STO. BLDG. EXH. FAN 3		480		15/3	16	HOIST & TROLLEY		1164		20/3
17	CHLORINE STO. BLDG. EXH. FAN 3			480		18	HOIST & TROLLEY			1164	
19	CHLORINE STO. BLDG. EXH. FAN 4	480				20	SPARE	-			15/1
21	CHLORINE STO. BLDG. EXH. FAN 4		480		15/3	22	SPARE		-		15/1
23	CHLORINE STO. BLDG. EXH. FAN 4			480		24	SPARE			-	15/1
25	SPARE				15/1	26	SPARE	-			20/1
27	SPARE		-		15/1	28	SPARE		-		20/1
29	SPARE			-	15/1	30	SPARE			-	20/1
SUBTOTALS		1828	1916	2187				2768	2414	2342	
PHASE TOTALS	Ø A = 4596	Ø B = 4330		Ø C = 4529							
TOTAL VOLT-AMPS	13455										

PANELBOARD SCHEDULE "A"

208/120 VOLTS, 3 PHASE, 4 WIRE — 400 AMP BUS — 300 AMP MAIN CIRCUIT BREAKER — MOUNTING: SURFACE

CKT. NO.	DESCRIPTION	CONNECTED VOLT-AMPS A	B	C	TRIP AMPS/ POLES	CKT. NO.	DESCRIPTION	CONNECTED VOLT-AMPS A	B	C	TRIP AMPS/ POLES
1	LUNCH & CONTROL RM., OFFICE & CORRIDOR LIGHTS	880			20/1	2	ELECTRICAL CONTROL PANEL	500			15/1
3	LUNCH RM. & OFFICE RECEP.		1080		20/1	4	INSTRUMENT PANEL		500		15/1
5	JANITOR & LOCKER RM., TOILET & CORRIDOR LIGHTS			320	20/1	6	FLOW METER FE-~~X~~FIT 4 (1)			550	15/1
7	LABORATORY LIGHTS	640			20/1	8	FLOW METER FE-~~X~~FIT 5 (1)	550			15/1
9	LABORATORY RECEPT.		900		20/1	10	CONTROL RM., JANITOR RM. & TOILET RECEPT.		900		20/1
11	LABORATORY RECEPT.			720	20/1	12	FLOW METERS FE-13 & FE-30			~~360~~ 180	15/1
13	UTILITIES FEED & ANALYZER RM. LIGHTS	400			20/1	14	~~SPACE~~ SCREENINGS SUMP PUMP				1P (5)
15	UTILITIES FEED & ANALYZER RM. RECEPT.		1440		20/1	16	~~SPACE~~ SAMPLE PUMP 3				1P (2)
17	SULFONATORS #1 & #2, CHLORINATOR #1 & #2			460	15/1	18	~~SPACE~~ SAMPLE PUMP 4				1P
19	~~SAMPLER #1~~ ANAL. RM. RECEP.	1150			15/1	20	SPACE				1P
21	~~SAMPLER #2~~ FLOW METER FE/FIT 30		~~180~~ 1340		15/1	22	SECURITY ALARM PNL.*		320		15/1
23	~~SAMPLER #3~~ ANAL. RM. RECEP.			1150	15/1	24	ANALYZER #1 & #2 CONTROL PNL			730	15/1
25	SPARE	-			20/1	26	PIPE GALLERY AND EQUIPMENT RM. LIGHTS (4)	700			20/1
27	OUTDOOR LIGHTS - NO. & WEST WALL		750		20/1	28	EQUIPMENT RM. RECEPT.		540		20/1
29	OUTDOOR LIGHTS - NORTH & EAST WALL			1200	20/1	30	PIPE GALLERY LIGHTS			600	20/1
31	OUTDOOR LIGHTS - F.F.R. AREA	1740			20/1	32	~~SPACE~~ SAMPLE PUMP 5				1P (2)
33	EAST VIEW PORT & F.F.R. STAIR LIGHTS		1840		20/1	34	~~SPACE~~ SAMPLE PUMP 6				1P
35	WEST VIEW PORT & WALKWAY AREA LIGHTS			880	20/1	36	HYDRO TANK CONTROL			100	15/1
37	~~AUX. RELAY PNL. VS-12A~~ SPARE	500			15/1	38	CHLORINE CONTACT TANK LIGHTS	600			20/1
39	~~AUX. RELAY PNL. VS-12B~~ SPARE		500		15/1	40	~~AUX. RELAY PNL. VS-29A~~ SPARE		500		15/1 (4)
41	SPARE			-	20/1	42	~~AUX. RELAY PNL. VS-29B~~ SPARE			500	15/1
SUBTOTALS		5310	~~7660~~ 6690	4730				2350	2760	~~2840~~ 2660	
PHASE TOTALS	Ø A = 7660	Ø E = 10,420		Ø C = 7570							
TOTAL VOLT-AMPS	25650										

(2) FLOW METER FE/FIT 30

(3) FLOW METER FE/FIT 30

(4) PIPE GALLERY AND EQUIPMENT RM. LIGHTS

(5) FLOW METER FE/FIT 30

* F.A. CABINET, CHLOR. & SO2 LEAK DETS.

Revised	Description	Submit.	Appr'd.	Date
(6)	CO NO. 58			
(5)	CO NO. 50			
(4)	FIELD CHANGE			
(3)	CO NO. 24			
(2)	CO NO. 57			
(1)	CLARIFICATION			

Refer to Tracing for Latest Revision

Reference Information and Notes:

Record Drawing
These record drawings have been prepared, in part, on the basis of information compiled and furnished by others. Kennedy/Jenks/Chilton is not responsible for any errors or omissions in this document as a result of information provided by others.
Dated APR. 24, 19 88

Designed	AA
Drawn	LCS
Checked	JJVS
Date	1/29/81

Wastewater Plant Improvements C-06-2464
Sausalito-Marin City Sanitary District

Kennedy/Jenks Engineers — San Francisco

Submitted: Walter L. Sherman C9370 — Approved: Robert J. Dewey

SCHEDULES

Scale: NONE
Job No.: 0112
Sheet: E-13 of

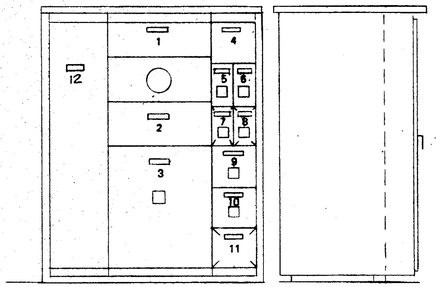

FRONT ELEVATION
(ENCLOSURE DOORS NOT SHOWN)

SIDE ELEVATION

MAIN SWITCHBOARD 1
NO SCALE

NO.	NAMEPLATE INSCRIPTION
1.	MAIN SWITCHBOARD 1
2.	UTILITY CURRENT TRANSFORMERS
3.	MAIN
4.	~~TRANSFORMER MS-3 FEEDER~~
5.	TRANSFORMER MS-1 FEEDER
6.	TRANSFORMER MS-2 FEEDER
7.	(BLANK)
8.	(BLANK)
9.	DIST. SWITCHBOARD 1 FEEDER
10.	MCC "A" FEEDER
11.	(BLANK)
12.	PULL SECTION

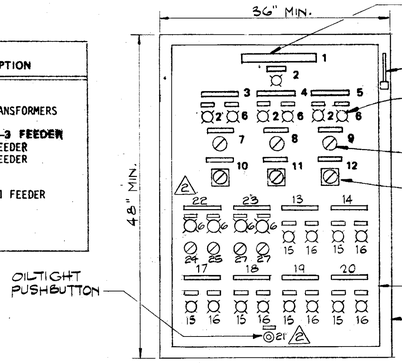

FRONT ELEVATION

NO.	NAMEPLATE INSCRIPTION
1.	ELECTRICAL CONTROL PANEL
2.	POWER ON
3.	REACTOR SUPPLY PUMP 1
4.	REACTOR SUPPLY PUMP 2
5.	REACTOR SUPPLY PUMP 3
6.	RUN
7.	SWITCH HS-14A
8.	SWITCH HS-15A
9.	SWITCH HS-16A
10.	SELECTOR SWITCH HS-14B
11.	SELECTOR SWITCH HS-15B
12.	SELECTOR SWITCH HS-16B
13	~~SECONDARY EFFLUENT RECIRC. VALVE KV-9~~ SPARE ⚠1
14	~~SECONDARY EFFLUENT RECIRC. VALVE KV-10~~ SPARE
15	FULLY OPEN
16	FULLY CLOSED
17	KNIFE VALVE KV-5
18	KNIFE VALVE KV-6
19	KNIFE VALVE KV-7
20	KNIFE VALVE KV-8
21	KNIFE VALVE LOW FLOW RESET
22	PRIMARY SURGE PUMPS PUMP NO. 1 PUMP NO. 2
23	SECONDARY SURGE PUMPS PUMP NO. 1 PUMP NO. 2
24	SWITCH HS-12A
25	" HS-12B
26	" HS-29A
27	" HS-29B

⚠2

ELECTRICAL CONTROL PANEL (ECP)
NO SCALE

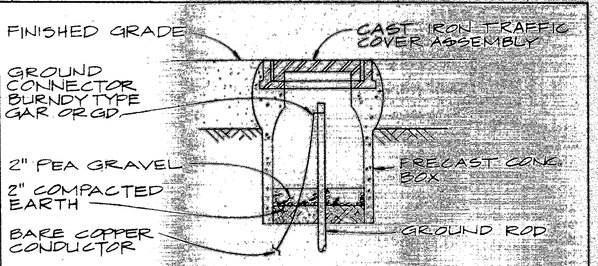

GROUND ROD BOX INSTALLATION
DETAIL 2 / 14|14
NO SCALE

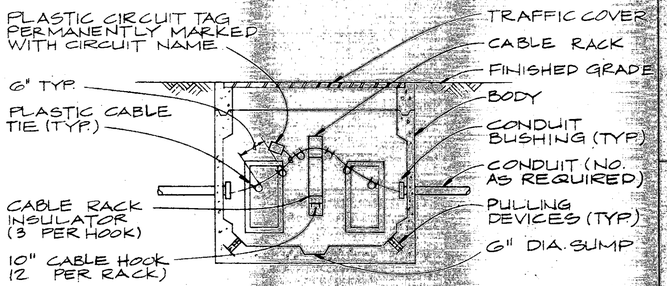

PRECAST CONCRETE PULLBOX INSTALLATION
DETAIL 3 / 14|14
NO SCALE

NOTE:
REFER TO CONTROL RM. LAYOUT PLAN ON DWG. E-10 FOR RIGHT ANGLED CONFIGURATION.

FRONT ELEVATION

NO.	NAMEPLATE INSCRIPTION
1.	MOTOR CONTROL CENTER "A"
2.	MAIN CIRCUIT BREAKER
3.	(BLANK)
4.	~~(BLANK)~~ MOTOR CONTROL CENTER "B"
5.	~~(BLANK)~~
6.	~~(BLANK)~~
7.	PRIMARY SCUM PUMP
8.	SECONDARY SLUDGE COLLECTOR OPERATOR 1
9.	SECONDARY SLUDGE COLLECTOR OPERATOR 2
10.	SECONDARY SCUM PUMP
11.	FIXED FILM REACTOR SUPPLY FAN 1
12.	FIXED FILM REACTOR SUPPLY FAN 2
13.	EFFLUENT SCREEN
14.	THICKENED SLUDGE PUMP
15.	THICKENED SCUM PUMP
16.	SLUDGE THICKENER DRIVE
17.	SUPERNATANT PUMP 1
18.	SUPERNATANT PUMP 2
19.	GRIT WASHER
20.	DIGESTED SLUDGE CIRCULATION PUMP 1
21.	DIGESTED SLUDGE CIRCULATION PUMP 2
22.	SLUDGE GAS COMPRESSOR
23.	SUPERNATANT PUMP LEAD/LAG SELECTION
24.	RECLAIMED WATER PUMP LEAD/LAG/FOLLOW SELECTION
25.	POTABLE WATER PUMP LEAD/LAG SELECTION
26.	RECLAIMED WATER PUMP 1
27.	RECLAIMED WATER PUMP 2
28.	RECLAIMED WATER PUMP 3
29.	(BLANK)
30.	POTABLE WATER PUMP 1
31.	POTABLE WATER PUMP 2
32.	H.W. CIRCULATING PUMP 1
33.	H.W. CIRCULATING PUMP 2
34.	H.W. CIRCULATING PUMP 3
35.	H.W. CIRCULATING PUMP 4
36.	~~KNIFE GATE FEEDER~~
37.	* SUMP PUMPS (SEC. GALLERY) FEEDER
38.	~~TRANSFORMER A2~~ FEEDER - SLUDGE PUMPS
39.	~~TRANSFORMER A1 FEEDER~~
40.	TRANSFORMER A FEEDER
41.	(BLANK)

*DELETED ⚠4

MOTOR CONTROL CENTER "A" & "B" ⚠3
NO SCALE

NOTE:
1. HOT DIP GALVANIZE STAND AFTER FABRICATION
2. BOLT STAND TO CHECKER PLATE AT APPROPRIATE LOCATIONS

EQUIPMENT MOUNTING STAND
DETAIL 1 / 14|14
NO SCALE

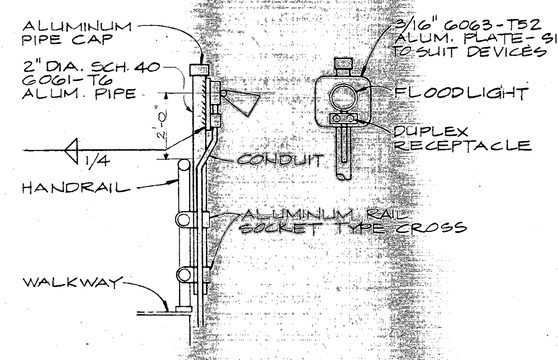

FLOODLIGHT MOUNTING
DETAIL 4 / 6|14
NO SCALE

Record Drawing
These record drawings have been prepared, in part, on the basis of information compiled and furnished by others. Kennedy/Jenks/Chilton is not responsible for any errors or omissions in this document as a result of information provided by others.
Dated APR. 29, 19 88

RECORD DRAWING

Revised	Description	Submit.	Appr'd.	Date
⚠4	CO NO. 25			
⚠3	CO. NO. 12			
⚠2	FIELD CHANGE			
⚠1	CLARIFICATION			

Refer to Tracing for Latest Revision

Reference Information and Notes:

Designed RDS
Drawn CAB
Checked JWS
Date 1-29-81

Wastewater Plant Improvements C-06-2464
Sausalito - Marin City Sanitary District
Kennedy/Jenks Engineers San Francisco
Submitted: [signature] CSSD
Approved: [signature]

ELEVATIONS AND DETAILS

Scale NONE
Job No. 0112
Sheet E-14 of

97

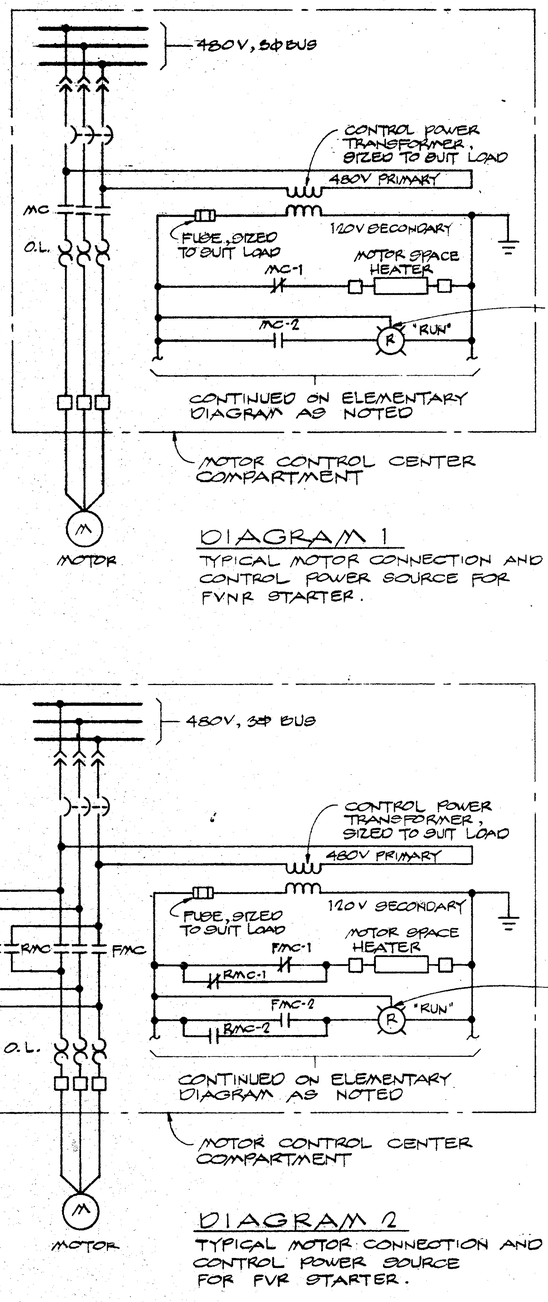

DIAGRAM 1

TYPICAL MOTOR CONNECTION AND CONTROL POWER SOURCE FOR FVNR STARTER.

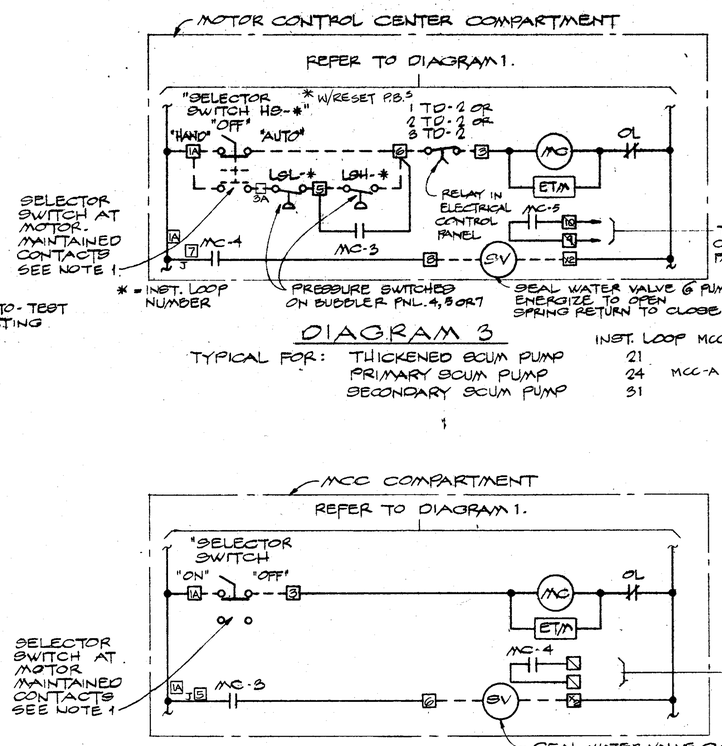

NOTE: [#] = TERM. # IN MCC SECTIONS (UNITS)

DIAGRAM 3

TYPICAL FOR:

	INST. LOOP	MCC UNIT # 5
THICKENED SCUM PUMP	21	3H
PRIMARY SCUM PUMP	24	MCC-A 2B
SECONDARY SCUM PUMP	31	2H

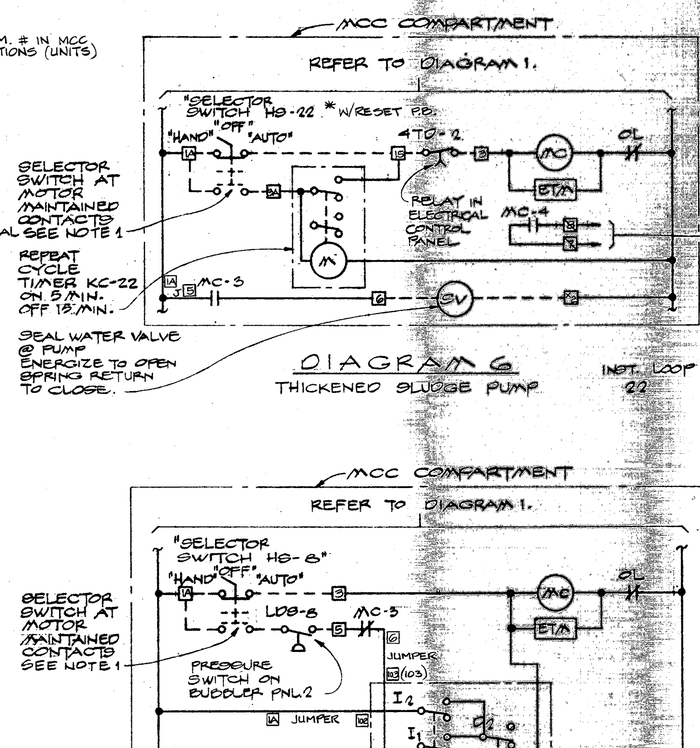

DIAGRAM 6

THICKENED SLUDGE PUMP

INST. LOOP 22 MCC-A 3F

DIAGRAM 4

TYPICAL FOR:

DIGESTED SLUDGE RECIRCULATION PUMP # 1	MCC-B	1B
DIGESTED SLUDGE RECIRCULATION PUMP # 2		1D

DIAGRAM 7

EFFLUENT SCREEN

INST. LOOP 8

DIAGRAM 2

TYPICAL MOTOR CONNECTION AND CONTROL POWER SOURCE FOR FVR STARTER.

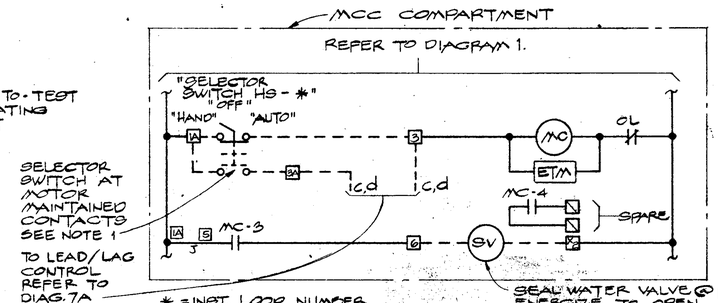

DIAGRAM 5

TYPICAL FOR:

		INST. LOOP	MCC-A
SUPERNATANT	PUMP 1	25A	4B
SUPERNATANT	PUMP 2	25B	4D

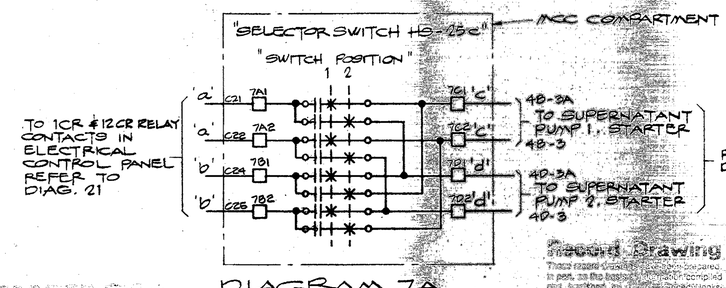

DIAGRAM 7A

SUPERNATANT PUMP LEAD/LAG CONTROL

Record Drawing
These record drawings have been prepared in part, as the basis of which is compiled and furnished by Kennedy/Jenks Engineers. Contractor is not relieved of any duties or responsibilities by reason of these drawings.
Contractor shall notify Kennedy/Jenks Engineers of any discrepancies found.
Dated APR 29 '88

REGISTERED DRAWING

Revised	Description	Submit.	Appr'd.	Date
1	FIELD TERMINAL NUMBERS ADDED			

Refer to Tracing for Latest Revision

Reference Information and Notes:
1. PROVIDE MEANS FOR LOCKING IN THE "OFF" POSITION

Designed	RDS
Drawn	WL
Checked	JWS
Date	1/29/81

Wastewater Plant Improvements C-06-2464
Sausalito-Marin City Sanitary District

Kennedy/Jenks Engineers — San Francisco

Submitted: Walter E. Hamman C9370 Approved: Robert J. Ames

ELEMENTARY DIAGRAMS 1-7

Scale: NONE
Job No. 0112
Sheet E-15 of

98

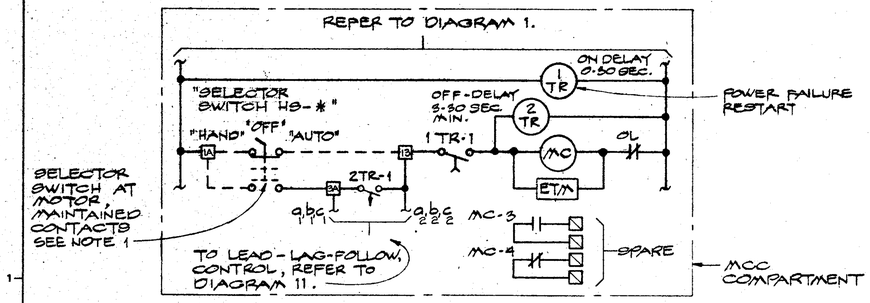

DIAGRAM 8

TYPICAL FOR:

	INST. LOOP		
RECLAIMED WATER PUMP 1	9A	MCC-A	5F
RECLAIMED WATER PUMP 2	9B		5J
RECLAIMED WATER PUMP 3	9C		5M

SELECTOR SWITCH HS-9 CONTACT DEVELOPMENT									
SWITCH POSITION	1			2			3		
PUMP	1	2	3	1	2	3	1	2	3
LEAD	X				X				X
LAG		X				X	X		
FOLLOW			X	X				X	

NOTE: 'X' INDICATES SWITCH CONTACT CLOSED.

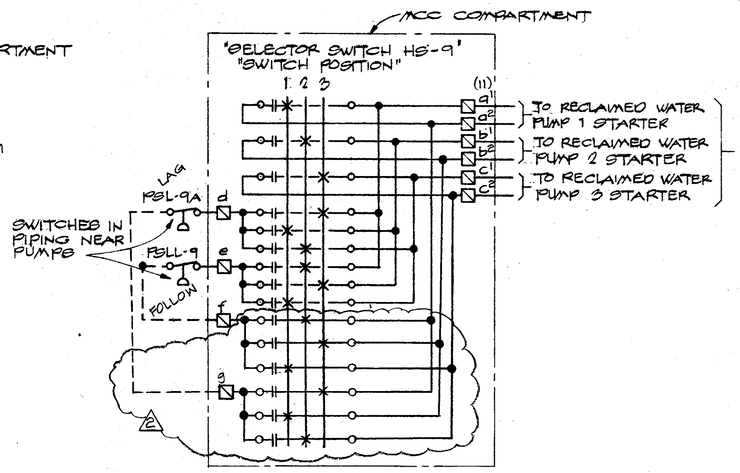

DIAGRAM 11 (2)

RECLAIMED WATER PUMP LEAD-LAG-FOLLOW CONTROL

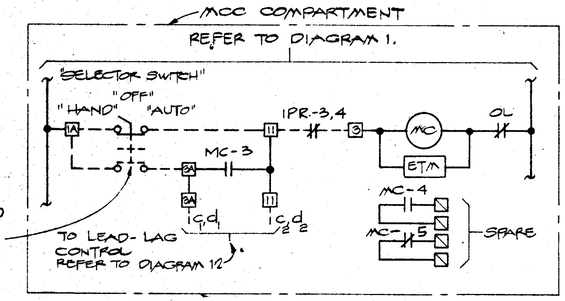

DIAGRAM 9

TYPICAL FOR:

POTABLE WATER PUMP 1	MCC-A	4H
POTABLE WATER PUMP 2		4K

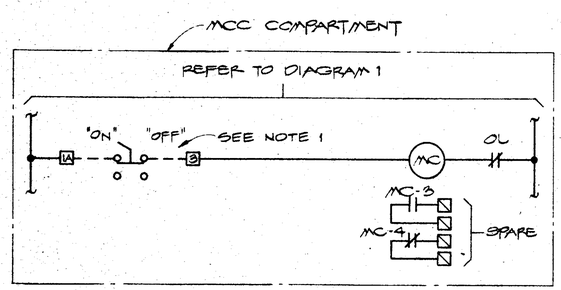

DIAGRAM 10

TYPICAL FOR:

H.W. CIRCULATING PUMP 1	MCC-B	1F
H.W. CIRCULATING PUMP 2		1H
FIXED FILM REACTOR SUPPLY FAN 1	MCC-A	2K
FIXED FILM REACTOR SUPPLY FAN 2		2M
SECONDARY SLUDGE COLLECTOR OPERATOR 1	MCC-A	2D
SECONDARY SLUDGE COLLECTOR OPERATOR 2		2F
(3) H.W. CIRC. PUMP 3	MCC-B	1K
(3) H.W. CIRC. PUMP 4		1M

SELECTOR SWITCH CONTACT DEVELOPMENT				
SWITCH POSITION	1		2	
PUMP	1	2	1	2
LEAD	X			X
LAG		X	X	

NOTE: 'X' INDICATES SWITCH CONTACT CLOSED.

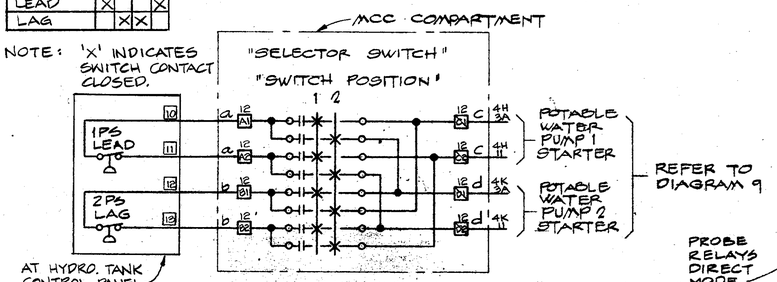

DIAGRAM 12

"POTABLE WATER PUMP LEAD/LAG CONTROL" MCC-A 5C

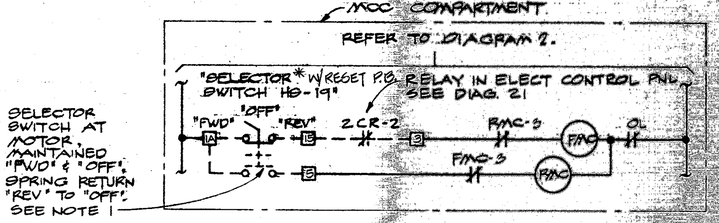

DIAGRAM 13

SLUDGE THICKENER DRIVE — INST. LOOP 19 — MCC-A 3L

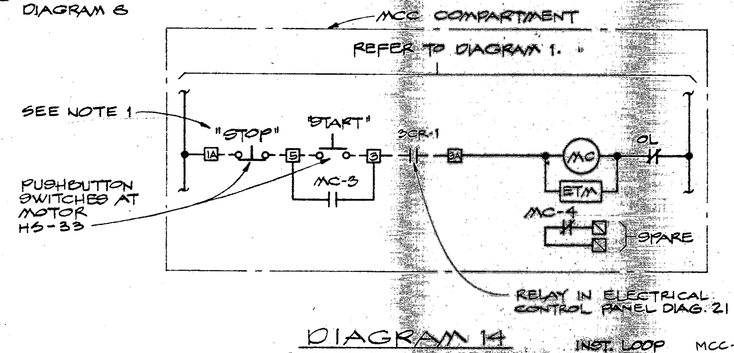

DIAGRAM 14

SLUDGE GAS COMPRESSOR — INST. LOOP 33 — MCC-A 4M

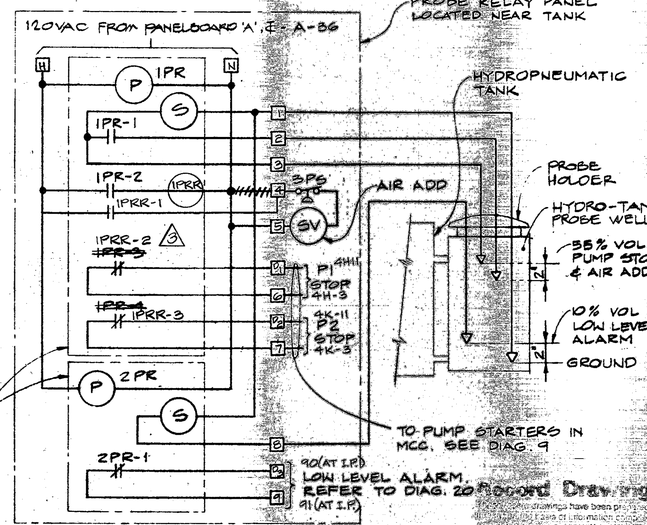

DIAGRAM 15

HYDROPNEUMATIC TANK CONTROL

Record Drawing
All drawings have been prepared in the regular course of information obtained from various sources. Kennedy/Jenks assumes no responsibility for any errors or omissions which may appear in this document as a result of information supplied by others.
Date: SEP 29, 1988
RECORD DRAWING

Revised	Description	Submit.	Appr'd.	Date
(3) (2) (1)	CLARIFICATION CO NO. 52 FIELD TERMINAL NUMBERS ADDED			

Refer to Tracing for Latest Revision

Reference Information and Notes:

1. PROVIDE MEANS FOR LOCKING IN THE 'OFF' POSITION

Designed	RDB
Drawn	WL
Checked	JWS
Date	1/29/81

Wastewater Plant Improvements C-06-2464
Sausalito-Marin City Sanitary District

Kennedy/Jenks Engineers — San Francisco

Submitted: Walter S. Kamma 29370 — Approved: Fred J. Lerman

ELEMENTARY DIAGRAMS 8-15

Scale	NONE
Job No.	0112
Sheet	E-16
of	

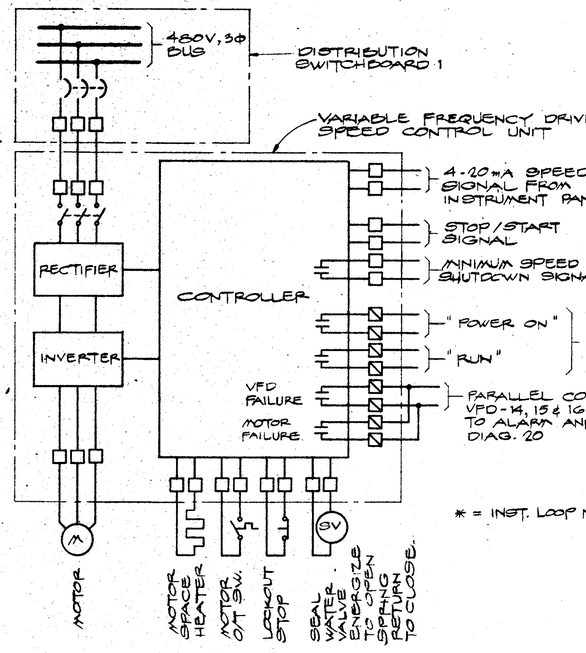

* = INST. LOOP NUMBER

DIAGRAM 16

TYPICAL FOR		INST. LOOP
REACTOR SUPPLY PUMP	1	14
REACTOR SUPPLY PUMP	2	15
REACTOR SUPPLY PUMP	3	16

LIMIT SWITCH REFERENCES

VALVE NO.	LSO-4	LSC-4
KV-5	ZSH 105	ZSL 105
KV-6	ZSH 106	ZSL 106
KV-7	ZSH 107	ZSL 107
KV-8	ZSH 108	ZSL 108

LIMIT SWITCH CONTACT DEVELOPMENT

CONTACT	VALVE POSITION: FULLY OPEN	FULLY CLOSED
LSC-1	---	
LSO-1		---
LSC-2	---	
LSO-2		---
LSC-3	---	
LSO-3		---
LSC-4	---	
LSO-4		---

NOTE:
CONTROL CIRCUIT SHOWN W/GATE IN THE FULLY CLOSED POSITION.
——CONTACT CLOSED.
---CONTACT OPEN.

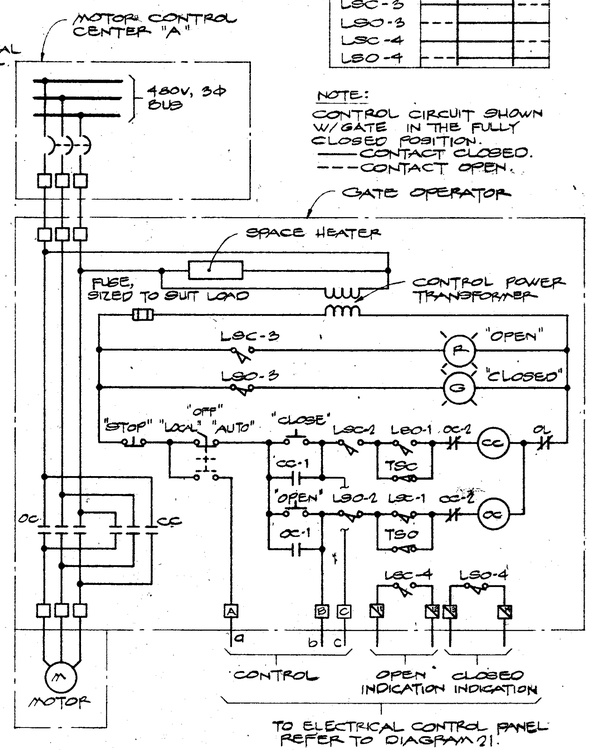

DIAGRAM 18

KNIFE VALVES KV-5, KV-6, KV-7, KV-8

DIAGRAM 17

TYPICAL FOR: PRIMARY SLUDGE PUMP 1 VS 12A
PRIMARY SLUDGE PUMP 2 VS 12B
SECONDARY SLUDGE PUMP 1 VS 29A
SECONDARY SLUDGE PUMP 2 VS 29B

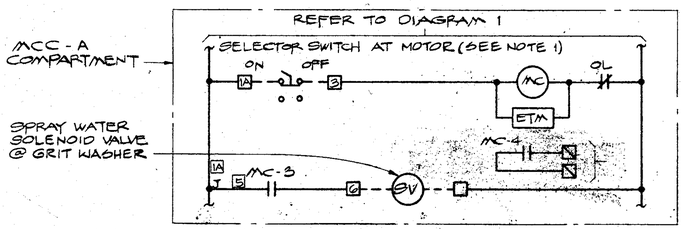

DIAGRAM 19
GRIT WASHER

MCC-A 4F

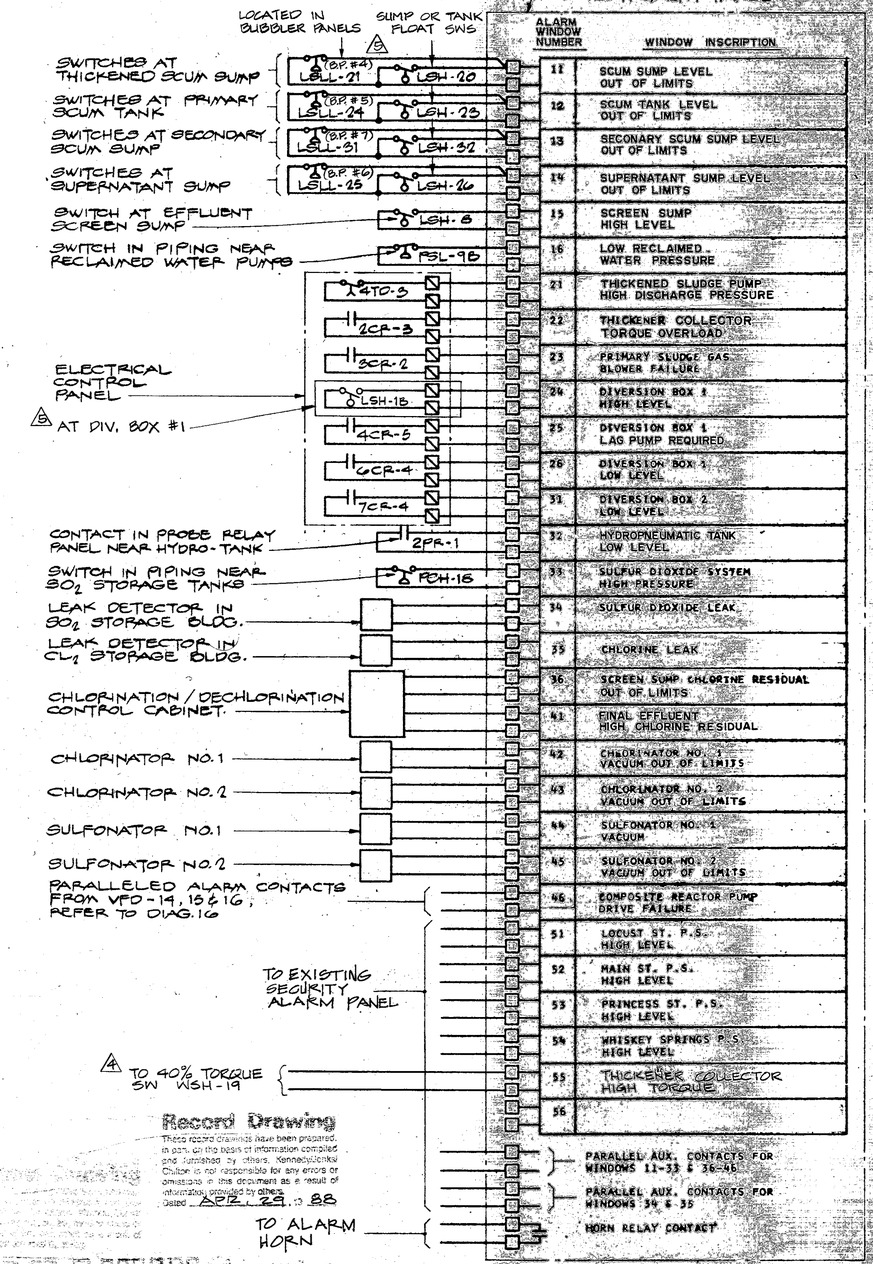

DIAGRAM 20
ALARM ANNUNCIATOR

Record Drawing
These record drawings have been prepared, in part, on the basis of information compiled and furnished by others. Kennedy/Jenks/Chilton is not responsible for any errors or omissions in the documents as a result of information provided by others.
Dated APR. 29, 19 88

RECORD DRAWING

Revised	Description	Submit.	Appr'd.	Date
△5	CLARIFICATION			
△4	CO NO. 56			
△3	CO NO. 25			
△2	FIELD CHANGE			
△1	FIELD TERMINAL NOS. ADDED			

Refer to Tracing for Latest Revision

Reference Information and Notes:
1. PROVIDE MEANS FOR LOCKING IN THE "OFF" POSITION

Designed	RDS
Drawn	WL
Checked	JWS
Date	1/29/81

Wastewater Plant Improvements C-08-2464
Sausalito - Marin City Sanitary District
Kennedy/Jenks Engineers — San Francisco
Submitted: Walter Hamman 6937U — Approved: J. Bert Aron

ELEMENTARY DIAGRAMS 16 - 20

Scale: NONE
Job No. 0112
Sheet E-17 of

ELECTRICAL CONTROL PANEL ENCLOSURE

120 VAC FROM PANELBOARD 'A' CIRCUIT A 2

'MC' CONTACT IN MCC (TYP.)

DISCONNECT SWITCH (INTERLOCKED W/ PANEL DOOR)

"POWER ON" (P)

MC-5

PSH-21 "RESET" 1TO-1

1TD ON DELAY 5 SEC. 1TO-2 C7 C8 — TO THICKENED SCUM PUMP STARTER REFER TO DIAG. 3

PSH-24 "RESET" MC-5 2TO-1

2TD ON DELAY 3 SEC. 2TO-2 C12 C13 — TO PRIMARY SCUM PUMP STARTER REFER TO DIAG. 3

PSH-31 "RESET" MC-5 3TO-1

3TD ON 3TO-3 C17 C18 — TO SECONDARY SCUM PUMP STARTER REFER TO DIAG. 3

LSL-25 LSH-25 1CR-1

1CR 1CR-2 C21 C22 — TO SUPERNATANT PUMP LEAD / LAG CONTROL REFER TO DIAG. 7A

LSHH-25 12CR-1

12CR 12CR-2 C24 C25

PSH-22 "RESET" MC-4 4TOR-1

4TD 4TD-2 C29 C30 — TO THICKENED SLUDGE PUMP STARTER REFER TO DIAG. 6

WSH-19 "RESET" 2CR-1

2CR 2CR-2 C33 C34 — TO SLUDGE THICKENER STARTER. REFER TO DIAG. 13

SLUDGE THICKENER TORQE OVERLOAD

2CR-3 80 — TO ANN. 81 AT I.P.

HIGH GAS TEMP. CUTOUT — TSH-33 PSL-33

LOW GAS PRESS. CUTOUT — PSL-33 STD

3CR 3CR-1 C36 C37 — TO SLUDGE GAS COMPRESSOR STARTER REFER TO DIAG. 14

3CR-2 B1 — TO ANN. B2 AT I.P.

LSH-1A 5TO-1 C39 4CR-1 C40 7TO-1

5TD 4CR 4CR-5 B4 — TO ANN. B5 AT I.P.

REACTOR SUPPLY PUMP CONTROL REFER TO DIAG. 16

VFD-16 CONTACTS REFER TO DIAG. 16

FSH-100 ON DELAY 1.2-120 SEC 6TD-1 C42

6TD 1LRA LATCH

KNIFE VALVE LOW FLOW RESET C43

1LRB UNLATCH

1LR C44

1LRX

C (CLOSE) (KV-5) (KV-6) B1 — KV-5 C45 C45A, KV-6 C46 C46A

A1 — 1LRX a — C46 C46A

A2 B2 — b (OPEN) C47 C47A — TO KNIFE VALVE KV-5 (N.C.)

(SIMILAR FOR KV-6)

C (CLOSE) (KV-7) (KV-8) B4 — KV-7 C48 C48A, KV-8

A4 — 1LRX a — C49 C49A

A3 B3 — b (OPEN) C50 C50A — TO KNIFE VALVE KV-7 (N.O.)

(SIMILAR FOR KV-8)

VFD MIN. SPEED SHUT-DOWN SIGNAL CLOSE ON LOW SPEED. REFER TO DIAG. 16 - RELAYS LOCATED IN IP

VFD-14 VFD-15 VFD-16

LSL-1 LSH-2

6CR 6CR-4

7CR 7CR-4

DIVERSION BOX LOW LEVEL — TO ANNS. AT I.P.

CONTINUED ABOVE RIGHT

CONTINUED FROM BELOW LEFT

SELECTOR SWITCH HS-14B

BOX 1 LEAD — GCR-1, 7CR-1

BOX 1 LAG — 4CR-2

BOX 2 MAN. — 8CR-1

SWITCH HS-14A ON - OFF

4-20mA SPEED SIGNAL FROM LIC-1

STOP/START SIGNAL TO REACTOR SUPPLY PUMP 1, VFD-14 REFER TO DIAG. 16

4-20mA SPEED SIGNAL TO HIK-14 SEE NOTE 1

VFD-14 CONTACTS REFER TO DIAG. 16

"POWER ON" (G)

"RUN" (R)

VFD-14 INDICATION

SELECTOR SWITCH HS-15B

BOX 1 LEAD — 6CR-2, 7CR-2

BOX 1 LAG — 4CR-3

BOX 2 MAN. — 9CR-1

SWITCH HS-15A ON - OFF

STOP/START SIGNAL TO REACTOR SUPPLY PUMP 2, VFD-15 REFER TO DIAG. 16

4-20mA SPEED SIGNAL TO HIK-15 SEE NOTE 1

VFD-15 CONTACTS REFER TO DIAG. 16

"POWER ON" (G)

"RUN" (R)

VFD-15 INDICATION

SELECTOR SWITCH HS-16B

BOX 1 LEAD — 6CR-5, 7CR-5

BOX 1 LAG — 4CR-4

BOX 2 MAN. — 10CR-1

SWITCH HS-16A ON - OFF

STOP/START SIGNAL TO REACTOR SUPPLY PUMP 3, VFD-16 REFER TO DIAG. 16

4-20mA SPEED SIGNAL TO HIK-16 SEE NOTE 1

VFD-16 CONTACTS REFER TO DIAG. 16

"POWER ON" (G)

"RUN" (R)

VFD-16 INDICATION

ON DELAY 10 SEC 7TD C81 4TDR-3 — 78 TO ANN. AT I.P. 79

4TD 4TD-1 C84

"FULLY CLOSED" Z1L-✱5 (G)

"FULLY OPEN" Z1H-✱5 (R)

Z5L-✱5 Z5H-✱5

KNIFE VALVE KV-5 INDICATION

FULLY CLOSED Z1L-✱6 (G)

"FULLY OPEN" Z1H-✱6 (R)

Z6L-✱6 Z6H-✱6

KNIFE VALVE KV-6 INDICATION

(SIMILAR FOR KNIFE VALVES KV-7 & KV-8)

2SL-7 = C47
2SH-7 = C45
2SL-8 = C46
2SH-8 = C49

C48

C1 MC-4 8TD — SLUDGE GAS COMP. RUNNING CONTACTS

CONTINUED ON SHT. E-19

120 VAC FROM PANELBOARD 'A' CIRCUITS A37, A39, A40 & A42

V.S. CONTROL UNIT CONTROL POWER DISC.

V.S. CONTROL UNIT RUN RELAY

LOCATED @ MOTOR

1CR-1 — TO FLOW METER FOR ZERO RETURN CIRCUIT

MOTOR SPACE HEATER (dr)

1CR-2 SEAL WATER VALVE (SV)

CHANGED TO ON-OFF SEL SWS. MOUNTED IN ECP CHANGED TO H-O-A △ ON HS-29A & 29B. HS-✱

L.Q.S. STOP START

STOP START SIGNAL — TO V.S. CONTROL UNIT REFER TO DIAG. 17

SPEED CONTROL POT HIK-✱

1CR-3

SPEED SIGNAL

MOUNTED IN ECP

"RUN" (R)

OPERATOR CONTROL PANEL MOUNTED ON DOOR

MOUNTED IN IP

✱ VS NUMBER

DIAGRAM 22 △3

TYPICAL FOR: ~~AUX. RELAY PANEL FOR~~ VS-12A PRI. SLUDGE #1
~~AUX. RELAY PANEL FOR~~ VS-12B " #2
~~AUX. RELAY PANEL FOR~~ VS-29A SEC. SLUDGE #1
~~AUX. RELAY PANEL FOR~~ VS-29B " #2

AUX. RELAY PANELS DELETED - ALL EQUIP. MOUNTED IN RESPECTIVE VFD OR ECP OR IP AS NOTED

208V, 3Φ, SUPPLY FROM PANELBOARD MS-1

CONTROL POWER TRANSFORMER SIZED TO SUIT LOAD

208V PRIMARY 120V SECONDARY

FUSE

LMC-1 HMC-1

MOTORIZED DAMPER AT FAN (MD)

"RUN" (R)

"ENERGY HIGH SPEED" LOS "STOP" "HIGH" "LOW"

HMC-2 (HC) OL OL

LMC-3 LMC-2 (LC)

HMC-3 HMC-4

HMC LMC

SWITCH LOCATED OUTSIDE DOOR OF CHLORINE STORAGE BLDG.

SWITCH AT FAN MOTOR

MOTOR (M)

WALL-MOUNTED 2-SPEED COMBINATION STARTER IN NEMA 4X ENCLOSURE IN CHLORINE STORAGE BLDG.

DIAGRAM 23

TYPICAL FOR: EXHAUST FAN 5
EXHAUST FAN 4

DIAGRAM 21
ELECTRICAL CONTROL PANEL

Record Drawing
These record drawings have been prepared in part on the basis of information compiled and furnished by others. Kennedy/Jenks/Chilton is not responsible for any errors or omissions in this document as a result of information provided by others.
Dated APR 29 19 88

RECORD DRAWING

Revised	Description	Submit.	Appr'd.	Date
3	FIELD CHANGE			
2	CLARIFICATION			
1	FIELD TERMINAL NOS. ADDED			

Refer to Tracing for Latest Revision

Reference Information and Notes:

1. PROVIDE 3 SPECIAL NAMEPLATES AT HS-✱B AS FOLLOWS: 'CAUTION: TO OPERATE VFD ON MANUAL, SWITCH HIK-✱ TO MANUAL AND ADJUST HIK-✱ TO DESIRED SPEED' ✱ = LOOP NO.

Designed RDS
Drawn WL
Checked JWS
Date 1/29/81

Wastewater Plant Improvements C-06-2464
Sausalito - Marin City Sanitary District
Kennedy/Jenks Engineers San Francisco
Submitted: Walter J. Hanna C9370 Approved: Robert J. Omura

ELEMENTARY DIAGRAMS 21-23

Scale: NONE
Job No. 0112
Sheet E-18

PANELBOARD SCHEDULE "DS"

208/120 VOLTS, 3 PHASE, 4 WIRE — 225 AMP BUS — 80 AMP MAIN CIRCUIT BREAKER — MOUNTING: SURFACE

CKT. NO.	DESCRIPTION	CONNECTED VOLT-AMPS A	B	C	TRIP AMPS/ POLES	CKT. NO.	DESCRIPTION	CONNECTED VOLT-AMPS A	B	C	TRIP AMPS/ POLES
1	LUNCH ROOM REFRIGERATOR	236			15/1	2	AIR HANDLING UNIT	1127			/1
3	LUNCH ROOM ELECTRIC RANGE		4730		70/2	4	TOILET & SHOWER EXH. FAN		162		15/1
5	LUNCH ROOM ELECTRIC RANGE			4730		6	CONTROL RM. EXH. FAN			667	15/1
7	LAB REFRIGERATOR	600			15/1	8	LAB FUME HOOD & EXH. FAN	910			15/1
9	LAB INCUBATOR		600		15/1	10	FEED & ANAL. RM. EXH. FAN		230		15/1
11	AIR ~~COMPRESSOR~~ DRYER ⚠1			2250	~~35~~ 15/1	12	FEED RM. EMERG. EXH. FAN & DAMPER			850	15/1
13	OPERATOR WRENCH RECEPTS. ⚠1	1320			25/1	14	EQUIP. RM. EXH. FAN-EAST	667			15/1
15	~~SAMPLE PUMP 3~~ SPARE		830		15/1	16	EQUIP. RM. EXH. FAN-WEST		667		15/1
17	~~SAMPLE PUMP 4~~ ⚠2			830	15/1	18	~~AIR DRYER~~ ROOF LIGHT ⚠1			120	15/1
19	~~SAMPLE PUMP 5~~	830			15/1	20	~~SPARE~~ AIR COMPRESSOR	X			15/~~X~~2
21	~~SAMPLE PUMP 6~~ ↓		830		15/1	22	~~SPARE~~ ↓ ↓		X		15/~~X~~2
23	SPARE				20/1	24	SPACE				1P
25	SPACE				1P	26	SPACE				1P
27	SPACE				1P	28	SPACE				1P
29	SPACE				1P	30	SPACE				1P
SUBTOTALS		2986	6990	7810				2704	1059	1637	

PHASE TOTALS Ø A: 5690 Ø B: 8049 Ø C: 9447

TOTAL VOLT-AMPS 23,186

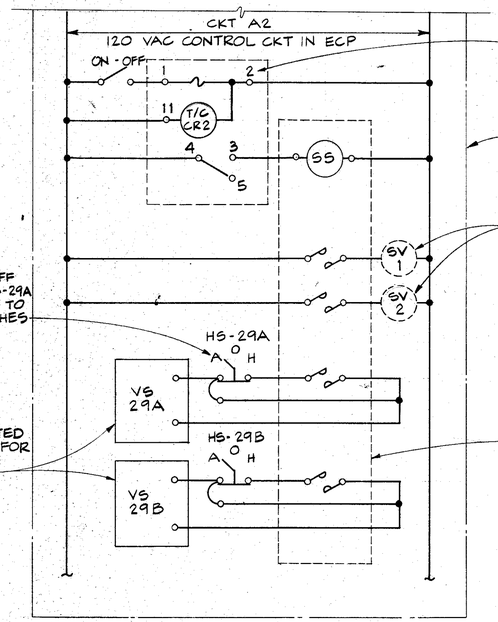

CHANGE ON-OFF SWITCHES HS-29A & 29B IN ECP TO H-O-A SWITCHES

VARIABLE FREQUENCY DRIVES LOCATED IN CONTROL FOR SEC SLUDGE PUMPS

CONTROL TIMER: EAGLE # CX312A6
(MAX. RANGE 199 MIN. 59 SEC.)
PROGRAMMED: 1 2 3 4 5 6 7 / 0 0 X 0 0 0 0 — SET @ 30 MIN. W/0.3 SEC PULSE

ELECTRICAL CONTROL PANEL ENCLOSURE

FUTURE PNEUMATICALLY OPERATED 3-WAY VALVES ON SEC SLUDGE PUMPS IN PIPE GALLERY

SEQUENCE CONTROLLER: EAGLE # MTO512A602
5 CKT, 12 STEP

REMOVE CAM SEGMENTS FOR:

CKT	CLOSED IN STEP NOS.
1A-1B	1, 3, 5, 7, 9, 11
2A-2B	1, 5, 9
3A-3B	2, 4, 6, 8, 10, 12
4A-4B	2, 6, 10

DIAGRAM 21 (CONT.)
SECONDARY SLUDGE PUMP CONTROL ⚠3

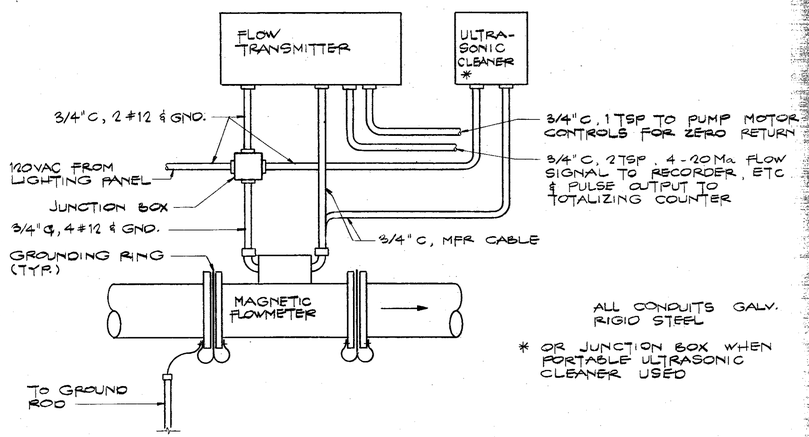

ALL CONDUITS GALV. RIGID STEEL

* OR JUNCTION BOX WHEN PORTABLE ULTRASONIC CLEANER USED

MAGNETIC FLOWMETER CONDUIT & WIRING CONNECTIONS DETAIL 11/E9

RECORD DRAWING

Revised	Description	Submit.	Appr'd.	Date
⚠3 ⚠2 ⚠1	FIELD CHANGE CO NO. 57 CLARIFICATION			

Refer to Tracing for Latest Revision

Reference Information and Notes:

Record Drawing
These record drawings have been prepared, in part, on the basis of information compiled and furnished by others. Kennedy/Jenks/Chilton is not responsible for any errors or omissions in this document as a result of information provided by others.
Dated APR. 29 19 88

Designed JWS
Drawn VD
Checked JWS
Date 1-29-81

Wastewater Plant Improvements C-06-2464
Sausalito-Marin City Sanitary District
Kennedy/Jenks Engineers San Francisco
Submitted: Approved:

SCHEDULE & DETAILS

Scale: NONE
Job No. 0112
Sheet E-19
of

102