**SAUSALITO-MARIN CITY SANITARY DISTRICT**
**SAUSALITO, CA**

# SCREW PRESS RELOCATION PROJECT

## TECHNICAL SPECIFICATIONS

**VOLUME 1 OF 2**

**SEPTEMBER 2024**

Digitally signed by Azman Ezaddin
Contact Info: Carollo Engineers, Inc.
Date: 2024.09.13 10:51:01-07'00'

REGISTERED PROFESSIONAL ENGINEER
AZMAN EZADDIN
No. 53219
CIVIL
STATE OF CALIFORNIA

Digitally signed by Michelle K. Trinh
Contact Info: Carollo Engineers, Inc.
Date: 2024.09.13 10:44:01-07'00'

REGISTERED PROFESSIONAL ENGINEER
MICHELLE K. TRINH
No. 77172
CIVIL
STATE OF CALIFORNIA

REGISTERED PROFESSIONAL ENGINEER
DIEP TAN NGUYEN
No. TE-10680
Exp. 6/30/25
ELECTRICAL
STATE OF CALIFORNIA

2795 MITCHELL DRIVE ▪ WALNUT CREEK, CALIFORNIA 94598 ▪ P 925-932-1710

**SAUSALITO-MARIN CITY SANITARY DISTRICT**

**SCREW PRESS RELOCATION PROJECT**

**SAUSALITO, CALIFORNIA**

**AUGUST 2024**

## TABLE OF CONTENTS

## VOLUME 1 OF 2

## BID DOCUMENTS, GENERAL REQUIREMENTS AND TECHNICAL SPECIFICATIONS


| SECTION NO. | TITLE |
|---|---|
| 00100 | NOTICE INVITING BIDS |
| 00200 | INSTRUCTIONS TO BIDDERS |
| 00210 | ACCESS, INDEMNITY AND RELEASE AGREEMENT |
| 00300 | SUPPLEMENTAL PROJECT INFORMATION AVAILABLE TO BIDDERS |
| 00400 | BID FORM |
| 00500 | NOTICE OF AWARD |
| 00510 | AGREEMENT |
| 00515 | CORPORATE CERTIFICATE OF AUTHORIZATION |
| 00520 | PARTNERSHIP CERTIFICATE OF AUTHORIZATION |
| 00525 | JOINT VENTURE CERTIFICATE OF AUTHORIZATION |
| 00530 | LLC CERTIFICATE OF AUTHORIZATION |
| 00540 | PERFORMANCE BOND |
| 00550 | PAYMENT BOND |
| 00560 | CONTRACTORS WORKERS COMP CERTIFICATION |
| 00600 | NOTICE TO PROCEED |
| 00610 | SAMPLE ESCROW AGREEMENT |
| 00700 | GENERAL CONDITIONS |
| 00800 | SUPPLEMENTARY GENERAL CONDITIONS |

## DIVISION 01 - GENERAL REQUIREMENTS


| SECTION NO. | TITLE |
|---|---|
| 01060 | REGULATORY REQUIREMENTS AND PERMITS |
| 01110 | SUMMARY OF WORK |
| 01140 | WORK RESTRICTIONS |
| 01160 | SITE SAFETY REQUIREMENTS |
| 01200 | MEASUREMENT AND PAYMENT |
| 01312 | PROJECT MEETINGS |
| 01322 | CONSTRUCTION DOCUMENT MANAGEMENT |
| 01324 | PROGRESS SCHEDULES AND REPORTS |
| 01326 | PHOTOGRAPHIC AND VIDEOGRAPHIC DOCUMENTATION |
| 01330 | SUBMITTAL PROCEDURES |
| 01340 | REQUEST FOR INTERPRETATION |
| 01355 | STORMWATER POLLUTION PREVENTION CONSTRUCTION ACTIVITIES: BEST MANAGEMENT PRACTICES |
| 01410 | REGULATORY REQUIREMENTS |
| 01424 | ABBREVIATIONS |
| 01450 | QUALITY CONTROL AND INSPECTIONS |
| 01455 | SPECIAL TESTS AND INSPECTIONS |
| 01460 | CONTRACTOR QUALITY CONTROL PLAN |
| 01500 | CONSTRUCTION FACILITIES AND TEMPORARY CONTROLS |
| 01550 | TRAFFIC CONTROL |
| 01560 | ENVIRONMENTAL CONTROLS |
| 01600 | PRODUCT REQUIREMENTS |
| 01605 | DELIVERY, STORAGE, AND HANDLING |
| 01722 | FIELD ENGINEERING |
| 01734 | WORK WITHIN PUBLIC RIGHT-OF-WAY |
| 01738 | SELECTIVE ALTERATIONS AND DEMOLITION |
| 01745 | SPARE PARTS, SPECIAL TOOLS AND MAINTENANCE MATERIALS |
| 01756 | FACILITY START-UP |
| 01770 | CONTRACT CLOSEOUT |
| 01780 | RECORD DOCUMENTS |
| 01782 | OPERATING AND MAINTENANCE DATA |
| 01785 | WARRANTIES AND BONDS |
| 01999 | REFERENCE FORMS |

## DIVISION 02 - SITE CONSTRUCTION


| SECTION NO. | TITLE |
|---|---|
| 02200 | SITE CLEARING |


## DIVISION 03 - CONCRETE


| SECTION NO. | TITLE |
|---|---|
| 03055 | ADHESIVE-BONDED REINFORCING BARS AND ALL THREAD RODS IN CONCRETE |
| 03071 | EPOXIES |
| 03301 | CONCRETE WORK |
| 03366 | CONCRETE FINISHES |
| 03600 | GROUTING |
| 03926 | STRUCTURAL CONCRETE REPAIR |


## DIVISION 05 - METALS


| SECTION NO. | TITLE |
|---|---|
| 05120 | STRUCTURAL STEEL FRAMING |
| 05140 | STRUCTURAL ALUMINUM |
| 05190 | MECHANICAL ANCHORING AND FASTENING TO CONCRETE AND MASONRY |
| 05310 | STEEL DECKING |
| 05500 | METAL FABRICATIONS |


## DIVISION 09 - FINISHES


| SECTION NO. | TITLE |
|---|---|
| 09960 | HIGH-PERFORMANCE COATINGS |


## DIVISION 11 - EQUIPMENT


| SECTION NO. | TITLE |
|---|---|
| 11246 | POLYMER BLENDING AND FEED EQUIPMENT: LIQUID |
| 11312T | VERTICAL DOUBLE DISC PISTON SLUDGE PUMPS |
| 11384 | DEWATERING SCREW PRESS SYSTEM |


## DIVISION 13 - SPECIAL CONSTRUCTION


| SECTION NO. | TITLE |
|---|---|
| 13000 | INSTRUMENT AND CONTROL SYSTEM |
| 13470 | SCADA - PROGRAMMABLE LOGIC CONTROLLER SYSTEM |
| 13470A | LIST |
| 13490 | FIBER OPTIC SYSTEM |

## DIVISION 15 - MECHANICAL


| SECTION NO. | TITLE |
|---|---|
| 15050 | COMMON WORK RESULTS FOR MECHANICAL EQUIPMENT |
| 15052 | COMMON WORK RESULTS FOR GENERAL PIPING |
| 15061 | PIPE SUPPORTS |
| 15062 | PREFORMED CHANNEL PIPE SUPPORT SYSTEM |
| 15076 | PIPE IDENTIFICATION |
| 15110 | COMMON WORK RESULTS FOR VALVES |
| 15111 | BALL VALVES |
| 15116 | PLUG VALVES |
| 15117 | SPECIALTY VALVES |
| 15120 | PIPING SPECIALTIES |
| 15125 | STRAINERS |
| 15230 | PLASTIC PIPING AND TUBING |
| 15956 | PIPING SYSTEMS TESTING |
| 15958 | MECHANICAL EQUIPMENT TESTING |


## DIVISION 16 - ELECTRICAL


| SECTION NO. | TITLE |
|---|---|
| 16000 | REQUIREMENTS FOR ELECTRICAL WORK |
| 16025 | ELECTRICAL DEMOLITION AND MODIFICATIONS |
| 16075 | ELECTRICAL IDENTIFICATION |


## APPENDICES


| APPENDIX | TITLE |
|---|---|
| A | EXISTING FKC SCREW PRESS SPECIFICATIONS AND SHOP DRAWINGS |

# SECTION 00100

# NOTICE INVITING BIDS

## ARTICLE 1 — BID OPENING

**1.01** **NOTICE IS HEREBY GIVEN** that the Sausalito-Marin City Sanitary District, (hereafter referred to as "District" or "Owner"), invites and will receive sealed Bids at the District's Main Office parking lot located at 1 East Road, Sausalito, California 94965, until **2:00 p.m., on October 23, 2024**, at which time bids will be publicly opened and read in the same location (the Main Office parking lot provides adequate space for social distancing), for the following project. Note that attendance at the bid opening is optional. All bidders will receive bid results immediately following the bid opening:

**SCREW PRESS RELOCATION PROJECT**

**NO LATE BIDS WILL BE ACCEPTED.**

## ARTICLE 2 — PROJECT INFORMATION

**2.01** DESCRIPTION OF THE WORK

In accordance with Drawings and Specifications prepared by Woodard and Curran, the Work includes furnishing of all labor, materials, tax, equipment, incidentals and services for the construction and completion of the Screw Press Relocation Project ("Project"). The Work includes but is not limited to:

1. Disassembly and inspection of existing screw press dewatering system.
2. Replacement of select mechanical components on the screw press system including screw press motor and covers, flocculation tank agitator and motor, and headbox level transducer.
3. Reassembly and recommissioning of screw press dewatering system at new location on the Equalization Structure.
4. Installation of new digested sludge feed pump, digested sludge piping and appurtenances.
5. Demolition of existing digested sludge feed pump, polymer feed system and associated piping.
6. Installation of new polymer feed system at Equalization Structure and relocation of existing polymer tote.
7. Installation of screw press dewatering system platform and repairs to existing screw press floor.
8. Installation of 1W/3W piping to screw press and polymer feed systems.
9. Electrical, instrumentation, and controls improvements, including screw press panel modifications, existing PLC modifications, new conduits and pull boxes, and lighting modifications.
10. Additional work as needed to construct a complete and operational project as specified in these Contract Documents.

**2.02** CERTIFICATES OF EXPERIENCE AND QUALIFICATIONS

Due to the complexity and scope of this critically important project, the District requires minimum prior related successful project experience for General Contractors, General Contractor's Project Manager and Electrical Subcontractors seeking to bid the Project. These requirements are found in Section 00400, Bid Form, – Attachments A and B.

**2.03** ESTIMATED COST OF THE WORK

The estimated cost for this work is: **$3 Million Dollars**

**2.04** CONTRACT TIME

The Contract Time for the completion of all the Work of the Project is **300 (Three Hundred)** calendar Days.

## ARTICLE 3 — CONTRACT DOCUMENTS

**3.01** A full set of Contract Documents is available at various Bay Area Builders Exchanges. Complete electronic sets of Contract Documents and related Supplemental Project Information can also be obtained free of charge on the District's website at http://www.smcsd.net or by contacting the District at 415-332-0244. All bidders must obtain a complete electronic bid set of Contact Documents in order to be considered responsive and to receive addenda notifications. Bidders shall develop and submit Bids at their own expense. The District will not reimburse any costs associated with the development and submittal of any and all Bids.

**3.02** Complete sets of Contract Documents must be used in preparing Bids. The District does not assume responsibility for errors or misinterpretations resulting from the use of incomplete sets of Contract Documents. Bidders shall develop and submit Bids at their own expense. The District will not reimburse any costs associated with the development and submittal of any and all Bids.

**3.03** Bidding procedures are prescribed in the Contract Documents. Bids shall be executed upon the Bid Forms bound and made a part of the Contract Documents. Any exception taken to the Contract Documents and any changes made to terms and conditions of the Bid Forms may render the Bid non-responsive. All prescribed Bid Forms may be removed from the Contract Documents for submission in a sealed envelope.

**3.04** The District, in making copies of the Contract Documents available on the above terms, does so only for the purpose of obtaining Bids for the Work and does not confer license or grant for any other use.

## ARTICLE 4 — MANDATORY PRE-BID SITE INSEPCTION

**4.01 Mandatory Pre-Bid Site Inspection**

All Bidders must attend a Project walk-through of all worksite locations. Bidders must include a signed statement of compliance for this requirement with their Bid submission or their Bid will be deemed non-responsive. A verification sheet is included at the end of this Section 00100. All attendees must wear hard soled shoes/boots suitable for uneven concrete and gratings. This requirement may be completed at a District advertised pre-bid walk or can be scheduled with the District at an alternate time.

**4.02** Where the District considers it necessary in response to questions raised during the Bid Period, District will post Addenda electronically at **http://www.smcsd.net by October 17, 2024**. Oral statements not confirmed by Addenda may not be relied upon and are not binding or legally effective. Bidders must acknowledge receipt of all Addenda where indicated in Section 00400, Bid Form. If a Bidder fails to acknowledge Addenda on their Bid Form their Bid may be deemed non-responsive.

## ARTICLE 5 — BID SECURITY AND BONDS

**5.01** Each Bid must also be accompanied by security in the form of a Bidder's Bond issued by a corporate surety, a certified check, or cashier's check payable to the District, or cash for an amount not less than ten percent (10%) of the Total Bid Price.

**5.02** The successful Bidder shall be required to execute a Material and Labor Payment Bond and Performance Bond, issued by a corporate surety, in conformance with the requirements set forth in the Contract Documents, each for not less than one hundred percent (100%) of the Contract Price.

**5.03** Pursuant to California Code of Civil Procedures Section 995.311, the District will verify all bonds for this Project are issued and executed by a California admitted surety.

## ARTICLE 6 — INQUIRIES

**6.01** Inquiries regarding further information about the Project may be directed to Kevin Rahman, P.E, District Engineer at kevin@smcsd.net.

## ARTICLE 7 — LAWS AND REGULATIONS

**7.01** CONTRACTOR'S LICENSE CLASSIFICATION AND REQUIREMENTS

Bidders and their proposed subcontractors shall hold such licenses as may be required by the laws of the State of California for the performance of the work specified in the Contract Documents. Bidders bidding as the prime Contractor shall possess a valid California Contractor's General Engineering License "A" at the time of contract award and throughout the contract term. The Contractor will also be required to ensure that all subcontractors working on this project are holding valid licenses suitable for their trade.

**7.02** DEPARTMENT OF INDUSTRIAL RELATIONS REGISTRATION

No Contractor or subcontractor may be listed on a bid proposal for a public works project unless registered with the DIR pursuant to California Labor Code Section 1725.5 [with limited exceptions from this requirement for bid purposes only under California Labor Code Section 1771.1(a)]. No Contractor or subcontractor may be awarded a contract for public work on a public works project unless registered with the DIR pursuant to California Labor Code Section 1725.5. If awarded a contract, the Contractor and its subcontractors, of any tier, shall maintain active registration with the Department of Industrial Relations for the duration of the Project.

**7.03** CALIFORNIA LABOR CODE

This Project is subject to the general prevailing rate of per diem wages as determined by the State of California Director of Industrial Relations (DIR), and travel and subsistence pay as such are defined in applicable collective bargaining agreements filed in accordance with Section 1773.8 of said Labor Code, for work needed and performed on this Project. These rate determinations may be found on the DIR's website at:

http://www.dir.ca.gov/OPRL/dprewagedetermination.htm

The successful bidding Contractor and its subcontractors shall employ the appropriate number of apprentices, in each apprenticeable craft, on the project site as stipulated in California Labor Code Section 1777.5.

Pursuant to California Labor Code Section 1771.4, this Project is subject to compliance monitoring and enforcement by the California Department of Industrial Relations.

Pursuant to the provisions of California Labor Code Section 6707, each Bid submitted in response to this Invitation to Bid shall contain, as a separate bid item, adequate sheeting, shoring, and bracing, or equivalent method, for the protection of life or limb in trenches and open excavation, exceeding five feet, which shall conform to applicable safety orders. Neither this

requirement, nor any payment by District for this separate bid item, shall be construed to impose tort liability on District, or its employees or agents, for any injury or damage caused by failure of any excavation or protective equipment or methods.

**7.04** CALIFORNIA PUBIC CONTRACT CODE 22300

Pursuant to California Public Contract Code Section 22300, for monies earned by the Contractor and withheld by the District to ensure the performance of the Contract, the Contractor, may, at its option, choose to substitute securities meeting the requirements of California Public Contract Code Section 22300, or have the retained, earned monies deposited in an escrow account at a federal or state-chartered bank.

**7.05** CALIFORNIA PUBLIC CONTRACT CODE 3400

In accordance with California Public Contract Code Section 3400, Bidders may propose equals of products listed in the technical specifications or project plans by manufacturer name, brand or model number, unless the technical specifications or plans specify that the product is necessary to match others in use. Complete information for products proposed as equals must be submitted to the District's Office for review at least thirty (30) calendar days after the date of Notice to Proceed. The District may specify a product by a particular manufacturer on a "sole-sourced" basis for the following reasons:

(1) In order that a field test or experiment may be made to determine the product's suitability for future use.
(2) In order to match other products in use on a particular public improvement either completed or in the course of completion.
(3) In order to obtain a necessary item that is only available from one source.

## ARTICLE 8 — DISTRICT'S RIGHTS

**8.01** The District reserves the right to award the Contract, to reject any or all Bids, to waive non-material and inconsequential irregularities in any Bid, and to reject nonconforming, nonresponsive, non-responsible, or conditional Bids.

**8.02** No Bid received and read aloud may be withdrawn for a period of ninety (90) days after the bid opening date, except pursuant to California Public Contract Code Section 5101.

---

_____
Kevin Rahman, P.E.
District Engineer

END OF SECTION

## CONFIRMATION OF MANDATORY SITE VISIT

**In accordance with Paragraph 4.2 of Section 00100, all bidders must attend a project walk-through of all worksite locations.**

**Provide the following information and initial each project site location visited. It is the Contractor's responsibility to thoroughly evaluate all worksites:**

**Company Name:** _____

**Representative:** **Name:** _____

**Phone:** _____

**E-Mail:** _____

**SMCSD Treatment Plant Site was evaluated on _____, 2024. Initial_____**

**This sheet must be included with your bid. Bids received without verification of mandatory site visits may be deemed non-responsive.**

**SECTION 00200**

**INSTRUCTIONS TO BIDDERS**

Index

Page

ARTICLE 1 — GENERAL ..... 2
ARTICLE 2 — WORK TO BE DONE ..... 2
ARTICLE 3 — COMPETENCE OF BIDDERS AND SUB-BIDDERS ..... 2
ARTICLE 4 — COMPLIANCE WITH CONTRACTOR'S LICENSE LAWS ..... 2
ARTICLE 5 — PRIOR DISQUALIFICATION ..... 2
ARTICLE 6 — EXAMINATION OF CONTRACT DOCUMENTS ..... 2
ARTICLE 7 — (NOT USED) ..... 3
ARTICLE 8 — EXAMINATION OF PROJECT SITE AND PRE-BID ACCESS TO THE SITE ..... 3
ARTICLE 9 — INTERPRETATION OF CONTRACT DOCUMENTS AND ADDENDA ..... 4
ARTICLE 10 — BIDDER'S SECURITY ..... 5
ARTICLE 11 — BID FORM ..... 5
ARTICLE 12 — SUBMISSION OF BID FORMS ..... 6
ARTICLE 13 — WITHDRAWAL OF BID ..... 7
ARTICLE 14 — PUBLIC OPENING OF BIDS ..... 7
ARTICLE 15 — REJECTION OF IRREGULAR BIDS ..... 7
ARTICLE 16 — COMPETITIVE BIDDING ..... 7
ARTICLE 17 — ESTIMATED QUANTITIES ..... 8
ARTICLE 18 — SUBSTITUTION OF ALTERNATIVE MATERIALS, ARTICLES, OR EQUIPMENT ..... 8
ARTICLE 19 — LOCAL BUSINESS LICENSE ..... 8
ARTICLE 20 — WORK PERCENTAGES ..... 8
ARTICLE 21 — DESIGNATION OF SUBCONTRACTORS ..... 9
ARTICLE 22 — CONTRACTS TO BE ASSIGNED- Not used ..... 10
ARTICLE 23 — MANUFACTURER CERT. AND APPROVAL OF CONTRACTOR – Not used ..... 10
ARTICLE 24 — DEBARMENT OF CONTRACTORS AND SUBCONTRACTORS ..... 10
ARTICLE 25 — IRAN CONTRACTING ACT CERTIFICATION ..... 10
ARTICLE 26 — SALES AND OTHER APPLICABLE TAXES, PERMITS, LICENSES AND FEES ..... 10
ARTICLE 27 — SHEETING, SHORING AND BRACING ..... 10
ARTICLE 28 — OFFER OF ASSIGNMENT OF ANTITRUST ACTIONS ..... 10
ARTICLE 29 — BIDDERS INTERESTED IN MORE THAN ONE BID ..... 10
ARTICLE 30 — RETURN OF BIDDER'S SECURITY ..... 11
ARTICLE 31 — RELIEF OF BIDDERS ..... 11
ARTICLE 32 — AWARD OF CONTRACT ..... 11
ARTICLE 33 — CONTRACT BONDS ..... 12
ARTICLE 34 — INSURANCE ..... 12
ARTICLE 35 — EXECUTION OF CONTRACT AGREEMENT ..... 12
ARTICLE 36 — FAILURE TO EXECUTE CONTRACT AGREEMENT ..... 13
ARTICLE 37 — NO ORAL AGREEMENTS ..... 13
ARTICLE 38 — BID PROTEST ..... 14
ARTICLE 39 — ESCROW BID DOCUMENTS ..... 15

## ARTICLE 1 — GENERAL

**1.01** Bidder must examine these instructions to Bidders carefully and respond to all requirements and conditions.

**1.02** Bidders must be aware of the requirements of codes, permits and standards referenced in the Contract Documents.

## ARTICLE 2 — WORK TO BE DONE

**2.01** It is the intention of the District to construct improvements as shown and set forth in the Contract Documents. All of the Work is particularly set forth in the Contract Documents, and all of said Work, together with all other work incidental thereto, is included. The Work includes the furnishing of all labor, materials, equipment, tools, supervision, incidentals, transportation and services necessary for completion of the Project. Codes and standards, definition of words and terms, and abbreviations shall be as specified in the Contract Documents.

## ARTICLE 3 — COMPETENCE OF BIDDERS AND SUB-BIDDERS

**3.01** All Bidders must complete and submit with their Bid the following Certifications:

A. Section 00400, Attachment A- CERTIFICATION OF BIDDER'S EXPERIENCE AND QUALIFICATIONS.

B. Section 00400, Attachment B- CERTIFICATION OF ELECTRICAL SUBCONTRACTOR'S EXPERIENCE AND QUALIFICATIONS.

Failure to provide this information within the prescribed Bid deadlines may render the Bid non-responsive and may be the basis for rejection of the Bid.

## ARTICLE 4 — COMPLIANCE WITH CONTRACTOR'S LICENSE LAWS

**4.01** Bidder's attention is directed to the provisions of Chapter 9 of Division 3 of the California Business and Professions Code ("Contractors"), and of California Public Contract Code Section 3300. The Contractor must possess the required classification of Contractor's License at the time the Bid is submitted (per Business and Professions Code Section 7028.15). If federal funds are involved in this project, the Contractor must possess the required classification of Contractor's License at the time of the Contract Award (per California Public Contract Code Section 20103.5).

**4.02** If a Bidder does not possess the required Contractor's License at the time a Bid is submitted, in accordance with Business and Professions Code Section 7028.15, the Bid will be considered non responsive and will be rejected by the District. The District may require forfeiture of the Bidder's Bond.

**4.03** Joint venture Bidders must possess a joint venture license. Each party to a joint venture must be properly licensed for the Work of this Project.

## ARTICLE 5 — PRIOR DISQUALIFICATION

**5.01** Bid may be rejected on the basis of a Bidder, any officer of such Bidder, or any employee of such Bidder who has a proprietary interest in such Bidder, having been disqualified, removed or otherwise prevented from Bidding on, or completing a federal, state or local project because of a violation of a law or a safety regulation.

**5.02** The District will review the circumstances presented in the Bid Form certification. The District will determine if acceptance of the Bid is in its best interest.

## ARTICLE 6 — EXAMINATION OF CONTRACT DOCUMENTS

**6.01** Each Bidder shall thoroughly examine and become familiar with the Contract Documents and Addenda (if any).

**6.02** The submission of a Bid shall constitute an acknowledgment upon which the District may rely that the Bidder has thoroughly examined and is familiar with the Contract Documents and that, except as provided in the Pre-Bid Protest Procedures in Article 26 below, the Bidder has waived any objections or contentions regarding the Contract Documents and/or the bidding requirements in the Contract Documents.

**6.03** The failure or neglect of a Bidder to receive or examine any of the Contract Documents shall in no way relieve it from any obligation with respect to its Bid or to the Contract. No claim for additional compensation will be allowed which is based upon a lack of knowledge of any Contract Documents.

**6.04** The submission of a Bid will be conclusive evidence that the Bidder has investigated and is fully aware of the conditions and difficulties that may be encountered including the availability of labor and materials to be provided, of the character, quality and quantities of Work to be performed, and of the requirements of all Contract Documents.

## ARTICLE 7 — NOT USED

## ARTICLE 8 — EXAMINATION OF PROJECT SITE AND PRE-BID ACCESS TO THE SITE

**8.01** Prior to submitting a Bid, it will be the sole responsibility of each Bidder to conduct any additional examination, investigation, exploration, test, study or other inquiry, and obtain any additional information pertaining to the physical conditions (including surface, subsurface, and underground utilities) at or near the Project site that may affect the cost, progress, or performance of the Project, and that the Bidder deems necessary to prepare its Bid for performance of the Project in accordance with the Contract Documents. Bidders seeking any such additional examination or other inquiries or information concerning the Project will do so at the Bidder's sole expense.

**8.02** Bidders seeking to conduct any additional examination or other inquiry at the Project site must request site access from the District by contacting at least three (3) working days in advance to:

Mr. Kevin Rahman, P.E., District Engineer
Sausalito-Marin City Sanitary District
1 East Road, Sausalito, California 94965
Phone: (415) 332-0244
Email: kevin@smcsd.net

The location of any excavation, boring or other invasive testing will be subject to approval on behalf of the District and any other agencies with jurisdiction over such testing. Bidders may not conduct tests at the Project site prior to obtaining District approval. Additionally, any such Bidder must deliver an executed Section 00210, ACCESS, INDEMNITY AND RELEASE AGREEMENT, and provide an insurance certificate as described therein by noon of the Day prior to Bidder’s approved site visit. Once approved testing is complete, Bidders must fill all trenches or holes, restore all pavement to match existing structural section, and otherwise clean up and restore the test site to its pre-test condition.

**8.03** Bidders who intend only to observe site conditions and not conduct such examinations are not required to provide an executed Access, Indemnity and Release Agreement or insurance information.

**8.04** If, during the course of its site inspection, a Bidder finds conditions which appear to be in conflict with the letter or spirit of the Contract Documents, the Bidder may apply to the District, in writing, for additional information and explanation at least ten (10) calendar days before the time specified for opening the Bids.

**8.05** Where investigation of subsurface conditions has been made by District in respect to foundation or other design, Bidders may inspect District's records of such investigation, including examination of samples and drill cores, if any.

**8.06** When logs of test borings indicating a record of the data obtained by District's investigation of subsurface conditions are made available, said logs represent only the investigator's opinion as to the character of material encountered in test borings and are made available only for the convenience of Bidders.

**8.07** Investigation of subsurface conditions is made for the purpose of design, and District assumes no responsibility, whatsoever, in respect to the sufficiency of test borings, accuracy of the log of test borings, of other preliminary investigations, or in the interpretation thereof. There is no warranty or guarantee,

express or implied, that the conditions indicated are representative of those existing throughout the Work, or any part of it, or that unforeseen conditions may not be encountered.

**8.08** Making information available to Bidders is not to be construed in any way as a waiver of the aforesaid provisions, and Bidders must satisfy themselves through their own investigations as to conditions to be encountered.

**8.09** No information derived from such inspection of records of preliminary investigations made by District, or from the maps, Drawings or Contract Documents, relieve Contractor from any risk or from properly fulfilling all the terms of the Contract. Records of such preliminary investigations as may have been made by District may be inspected by contacting the District's Project Manager identified in the Notice Inviting Bids.

**8.10** Failure by Bidder to educate itself with available information will not relieve Bidder from responsibility for estimating properly the difficulty or cost of successfully performing the Work. The information provided by the District is not intended to be a substitute for, or a supplement to the independent verification by the Bidder to the extent such independent investigation of site conditions is deemed necessary or desirable by the Bidder.

**8.11** Submission of a Bid by the Bidder shall constitute conclusive evidence that, if awarded the Contract, it has relied upon and is relying on its own examination of (1) the site of the Work, (2) access to the site, (3) all other data and matters requisite to the fulfillment of the Work and on its own knowledge of existing facilities on and in the vicinity of the site of the Work to be constructed under the Contract, (4) the conditions to be encountered, (5) the character, quality and scope of the proposed Work, (6) the quality and quantity of the materials to be furnished, and (7) the requirements of the Contract Documents, and other related information made available to Bidders by the District (see Section 00300, Supplemental Information Available to Bidders).

**8.12** Bidders are required to inform themselves fully of the conditions relating to the construction and labor under which the Work will be or is now performed, and, so far as possible, the successful Bidder must employ such means and methods in carrying out its Work as will not cause any interruption or interference with any other contractor.

## ARTICLE 9 — INTERPRETATION OF CONTRACT DOCUMENTS AND ADDENDA

**9.01** If any person contemplating submitting a Bid is in doubt as to the intended meaning of any part of the Contract Documents, or finds discrepancies in, or omissions in the Contract Documents, that person must submit a written request for an interpretation or correction thereof at least seven (7) calendar Days before the deadline for receipt of Bids.

**9.02** Inquiries must be submitted via electronic telecommunication (e-mail) to:

Kevin Rahman, P.E., District Engineer
Sausalito-Marin City Sanitary District
1 East Road, Sausalito, California 94965
Phone: (415) 331-4714
Email: kevin@smcsd.net

All questions submitted via (e-mail) shall be submitted in the time set forth herein. For e-mail to be effective, it shall have a date and time receipt acknowledgment from the recipient and shall be clearly identified with the following title in the Subject line:

"Bidder Questions: _____Project."

**9.03** It is the Bidder's sole responsibility to ensure that the e-mail question is received by the above designated recipient in a timely manner.

**9.04** Any request received fewer than seven (7) calendar Days before the said deadline may not be answered. The person submitting the request will be responsible for its prompt delivery.

**9.05** Any interpretation or correction of the Contract Documents will be made only by Addendum, and will be transmitted to all recipients who obtained a complete bid set of Contact Documents from the District in order to receive addenda notifications.

**9.06** The District is not responsible for any explanation or interpretation of the Contract Documents not communicated to Bidders in an Addendum. If no Addenda are issued relating to supposed discrepancy, conflict, omissions or errors in figuring the Work, the supposed discrepancies, conflicts, or omissions are governed by Section 00700-1.05, Order of Precedence of the Contract Documents.

**9.07** The District reserves the right to revise or amend any part of the Contract Documents, including but not limited to, the specifications, up to the time set for opening the Bids. Such revisions and amendments, if any, shall be announced by written addenda. Copies of such written addenda shall be furnished to all recipients of complete sets of Contract Documents. Addenda issued during the time of bidding shall become a part of the documents furnished Bidders for the preparation of Bids, shall be covered in the Bids, and shall be made a part of the Contract Documents. Each Bid shall include specific acknowledgment in the space provided of receipt of all Addenda issued during the bidding period. Failure to so acknowledge may result in the Bid being rejected as not responsive. Failure of any Bidder to receive such Addenda shall not be grounds for non-compliance with the terms of the instructions.

**9.08** Should the Bidder find patent ambiguities in the Contract Documents, the Bidder shall at once notify the District of such findings in writing prior to opening of the Bids. Replies to such notification of patent ambiguities may be made in the form of Addenda, which will be issued simultaneously to all persons who have obtained a copy of the Contract Documents from the District. Failure of the Bidder awarded the Contract to notify the District of such patent ambiguity shall eliminate any and all recourse, including time extensions and Contract price adjustments the Bidder may have, against the District occurring as a result or arising out of such patent ambiguity.

## ARTICLE 10 — BIDDER'S SECURITY

**10.01** Each Bid must be accompanied by a certified or cashier's check, or an original Bidders Bond in an amount not less than ten percent (10%) of the total aggregate of the base Bid, not including all additive Bid items, to be used in determining the lowest monetary Bid for the Project.

**10.02** A Bid will be considered non-responsive if not accompanied by proper Bidder's Security.

**10.03** The original Bid Bond must be provided by an admitted Surety insurer, authorized to issue Surety bonds in the State of California, and it must execute the Bid Bond.

**10.04** Bonds and checks must be made payable to "Sausalito-Marin City Sanitary District".

**10.05** All bonds must be provided on the forms included with the Contract Documents or the Bid will be considered non-responsive.

## ARTICLE 11 — BID FORM

**11.01** Prospective Bidders are furnished Bid forms (Section 00400, Bid Form, and all included Attachments).

**11.02** A Bid not submitted on the Bid forms furnished by the District will be considered non-responsive.

**11.03** Completing the Bid Forms:

A. Bidder's name must be the same as listed on Bidder's California State Contractor's license provided by Bidder on its Bid Form and also Bidder's DIR registration provided on its Bid Form.

B. Bid price(s) must be in the manner required by the Bid Form.

C. Bid Form must be signed by Bidder or duly authorized representative.

1. If Bidder is an individual, name must be stated.

2. If Bidder is a partnership, name of the partnership must be stated and one or more partners must sign the Bid Form.

3. If Bidder is a corporation, name of the corporation must be stated, the state of incorporation must be listed, the title of the person with authority to sign and bind corporation, must be stated, and the corporate seal must be affixed. **If the Bid is made by a corporation; a copy of the bylaws or resolution of the Board of Directors of the corporation shall be furnished, showing the authority of the officer signing the Bid, to execute Bid on behalf of the corporation**.

4. If Bidder is a Limited Liability Company (LLC), state the name of the LLC exactly as it appears on it appears on file with the California Secretary of State, including the entity ending (ex: "Jones & Company, LLC" or "Smith Construction, a Limited Liability Company". Signature of the LLC's Managing Partner or Officer must include attached evidence of authority to bind the LLC under the LLC's articles of organization.

5. If the Bid is made by a joint venture, the Bid shall be signed by an authorized representative of the sponsoring partner of the joint venture. **Additionally, the Bid shall include a copy of the joint venture resolution or agreement empowering the authorized representative to execute the Bid and bind the joint venture.**

6. Bidder's business and mailing address must be stated.

**11.04** Required Listing of Major Equipment Items

A. Certain items of major equipment to be provided under this Contract are tabulated in the Section 00400, Bid Form - Attachment E, Schedule of Major Equipment and Material Suppliers. The Bidder shall designate the name of the manufacturer of the equipment to be provided for each major equipment item and submit this form with its Bid. By so indicating, the Bidder warrants that equipment manufactured and/or supplied by the designated manufacturer will be provided on the Project. See Attachment E to Bid Form for additional instructions and requirements.

## ARTICLE 12 — SUBMISSION OF BID FORMS

**12.01** Bid Forms must be completed in ink or typed, completely filled out, and submitted on the Bid Form furnished as part of the Contract Documents. Faxed Bids will not be considered by District. All signatures on the Bid Forms shall be wet signatures.

**12.02** It is the sole responsibility of the Bidder to ensure that its Bid is received at the proper time and at the proper location. Bids received after the time fixed for receiving them will not be considered.

**12.03** Late Bids will be returned by the District to the Bidder unopened.

**12.04** The Bid Form submitted must not contain any erasure, interlinear additions, or other corrections unless each such correction is authenticated. Authentication may be made by affixing in the margin, immediately opposite the correction, the signature of the person submitting the Bid.

**12.05** Changes in or additions to the Bid Form, recapitulations of the Work bid upon, alternative or additive bids, or any other modifications of the Bid Form which are not specifically called for in Section 00400, Bid Form, may result in rejection of the Bid by the District. The District may treat all such Bids as not being responsive to the Notice Inviting Bids.

**12.06** The District will consider no oral, telephonic or email modification of any Bid submitted.

**12.07 Each Bid shall be enclosed in a sealed envelope distinctly marked "BID" and include:**

- **Project title as given,**
- **Date and Time of Bid Opening,**
- **Name and address of Bidder, and**
- **Attention: District Secretary**

**A Federal Express, UPS, or other courier delivery envelope is not considered the sealed "BID" envelope. Such delivery envelope must also be marked with the above required information.**

Failure to mark sealed envelopes may result in a premature opening of, or failure to open, such Bid. Bid submissions with improperly marked sealed envelopes may be disregarded.

**12.08** Bids shall either be (1) delivered in person and deposited into the locked drop box located outside the Sausalito-Marin City Sanitary District office located at 1 East Road, Sausalito, California 94965, during normal business hours, being 7 a.m. to 3 p.m., Monday through Friday, or, (2) mailed to "Office of the District Secretary of the Sausalito-Marin City Sanitary District located at 1 East Road, Sausalito, California 94965, Attention: District Secretary" so that either delivery method is received by the Bid submission deadline time and date.

**12.09** The preparation of a Bid shall be by and at the expense of the Bidder.

## ARTICLE 13 — WITHDRAWAL OF BID

**13.01** Any Bid may be withdrawn at any time before the time fixed in the Notice Inviting Bids, or as postponed by Addenda, for the opening of Bids only by written request of the Bidder or a duly authorized representative.

**13.02** Withdrawal of a Bid does not prejudice the right of the Bidder to file a new Bid at any time prior to the time fixed for receiving Bids in the Notice Inviting Bids, or as postponed by Addenda.

**13.03** Whether or not Bids are opened exactly at the time stated in the Notice Inviting Bids, or as postponed by Addenda, a Bid will not be accepted after the time stated.

**13.04** After the opening of Bids, Bids may only be withdrawn in accordance with the provisions of California Public Contract Code Sections 5100-5107.

## ARTICLE 14 — PUBLIC OPENING OF BIDS

**14.01** Bids will be opened and read publicly at the time and place indicated in the Notice Inviting Bids. Bidders or their authorized agents are invited to be present.

## ARTICLE 15 — REJECTION OF IRREGULAR BIDS

**15.01** The District may reject any Bid if there appears to be any alteration of the Bid Form, any addition or condition not called for, or any incompleteness, erasure or irregularity of any kind.

**15.02** Bids not completed in Ink or typed will be rejected.

**15.03** If the Bid amount or other material information is changed, the change must be initialed.

## ARTICLE 16 — COMPETITIVE BIDDING

**16.01** More than one Bid from an individual, firm, partnership, corporation, or combination thereof, as a principal, under the same or different names will not be considered. Reasonable basis for believing that any individual, firm, partnership, corporation, or combination thereof is a principal in more than one Bid for the Work contemplated may cause the rejection of all Bids in which such individual, firm, partnership, corporation, or combination thereof is a principal.

**16.02** If there is a reason for believing that collusion exists among the Bidders, any or all Bids may be rejected.

**16.03** A person, firm, or corporation submitting a sub-bid to a Bidder, or who quoted prices on materials to a Bidder, is not thereby disqualified from submitting a sub-bid or quoting prices to other Bidders or from being a principal Bidder for the same Work.

**16.04** Bids in which unit prices are obviously unbalanced may be rejected.

**16.05** Bidders are put on notice that any collusive agreement fixing the prices to be Bid so as to control or affect Awarding of the Contract is in violation of competitive bidding requirements of the Public Contract Code and may render void any Contract let under such circumstances.

## ARTICLE 17 — ESTIMATED QUANTITIES

**17.01** The quantities stated in a schedule of items for which unit prices are asked to be Bid are approximate only.

**17.02** The quantities are given as a basis for the comparison of Bids.

**17.03** The District does not, expressly or by implication, represent that the actual amount of Work will correspond with quantities given and reserves the right to increase or decrease the quantities of Work for any Bid item, or to omit portions of the Work, as the District may deem necessary or advisable.

## ARTICLE 18 — SUBSTITUTION OF ALTERNATIVE MATERIALS, ARTICLES, OR EQUIPMENT

**18.01** Bids must be based upon use of items named in the Contract Documents.

**18.02** By so indicating, the Bidder warrants that equipment manufactured and/or supplied by the named manufacturer will be provided on the Project unless review of submittal information or performance under tests reveals that the equipment does not meet the Contract requirements.

**18.03** Failure to indicate a manufacturer for any single item of the equipment listed in the schedule may render the Bid unresponsive to the Notice Inviting Bids and may be a basis for rejection of the Bid.

**18.04** In certain cases, specific items have been named (Named Products) because of operational or maintenance considerations; approval of proposed equals should not be assumed.

**18.05** Pursuant to California Public Contract Code §3400, alternative material(s), article(s), or equipment that are of equal quality and of required characteristics for the purpose intended may be proposed provided the Bidder complies with the following requirements:

A. The proposal will not be considered unless the submittal is accompanied by complete information and descriptive data necessary to determine equality of offered material(s), article(s) or equipment.

B. Samples must be submitted when requested by the District.

C. Burden of proof as to comparative quality, suitability, and performance of offered material(s), article(s), or equipment is the responsibility of the Bidder submitting the proposal.

D. Requests for approval must comply with the requirements of Section 01600, Product Requirements.

**18.06** District's Authorized Representative is the sole judge as to such matters. In the event District's Authorized Representative rejects the use of such Alternative(s) submitted, then the Contractor must furnish one of the particular Named Products specified in the Contract Documents.

**18.07** Proposals for Alternative material(s), process, article(s), or equipment will not be accepted during the bid period.

**18.08** See Section 01600, Product Requirements, for additional substitution requirements.

## ARTICLE 19 — LOCAL BUSINESS LICENSE

**19.01** If required by District or County, the Contractor shall have a local business license for the Work contemplated before the Contract can be executed. All subcontractors will be required to secure the appropriate local business license before they commence work on the Project.

## ARTICLE 20 — WORK PERCENTAGES

**20.01** The Contractor shall perform at least forty percent (40%) of the Contract Total Base Bid Amount. This portion of work shall encompass the performance of work by the Contractor's forces and equipment, the procurement of materials and equipment by the Contractor and field related general conditions required to support and supervise the construction effort. Subcontractors shall not be responsible for the performance of any work or procurement of materials or equipment within the above Contractor's

work percentage allotment. Materials purchased by the Contractor but installed by a subcontractor will not contribute to the above Contractor's work percentage allotment.

**20.02** The value of the work subcontracted shall be determined by summing all of the percentages identified for the subcontractors listed in Section 00400, Bid Form, Attachment D, Designation of Subcontractors. If the sum of such percentages exceeds sixty percent (60%), the District may treat the Bid as nonresponsive and reject it on that basis.

**20.03** By submitting a Bid, the Bidder is certifying that it is in compliance with this obligation. This self-performance requirement is a material term of these Contract Documents and shall be subject to verification upon request. If it is determined that the Bidder's certification was other than true in all respects, the Bidder agrees that the following shall occur:

A. if the Contract has not been awarded to the Bidder, the Bidder's Bid shall be deemed non-responsive; or

B. if the Contract has been awarded, at the discretion of the District, Contractor shall be subject to either:

1. A reduction of its Total Bid Price by ten (10) percent of the value of the amount by which the certification was in error (e.g., if the Total Bid Price is $10,000,000 and the amount of self-performed work is determined to be $3,000,000 instead of at least $4,000,000, then the amount of the shortfall ($1,000,000) shall be multiplied by 10% to yield the sum of $100,000 to be reduced from the contract price); or

2. Termination of the Contractor's right to proceed for default.

## ARTICLE 21 — DESIGNATION OF SUBCONTRACTORS

**21.01** In accordance with California Public Contracting Code Section 4100, et. seq., "Subletting and Subcontracting Fair Practices Act," each general Bid shall have listed in Section 00400, Bid Form, Attachment D, DESIGNATION OF SUBCONTRACTORS, the name, location of the place of business and the portion of work to be performed by each subcontractor who will perform work or labor or render service to the Bidder in or about the construction of the work or improvement, or of any subcontractor licensed by the State of California who, under subcontract to the Bidder, will specially fabricate and install a portion of the work or improvement according to detailed drawings contained in the plans and specifications, in an amount in excess of one-half of one percent of the Bidder's Total Bid Price. If required by District or County, the Contractor shall have a local business license for the Work contemplated before the Contract can be executed. All subcontractors will be required to secure the appropriate local business license before they commence work on the Project.

**21.02** If no subcontractor is specified for a portion of the work, or if more than one subcontractor is specified for the same portion of Work, to be performed under the Contract in excess of one-half of one percent (1/2%) of the Bidder's Total Bid Price, then the Bidder shall be deemed to have agreed that it is fully qualified to perform that Work and that it shall perform that portion itself.

**21.03** Failure to comply with the provisions of the California "Subletting and Subcontracting Fair Practices Act" shall make the Contractor subject to the sanctions as set forth in the Act.

**21.04** The Bidder's listed subcontractors in Section 00400, Bid Form, Attachment D, DESIGNATION OF SUBCONTRACTORS, must be registered with the State of California, Department of Industrial Relations (DIR) accordance with California Labor Code section 1725.5. Bidders shall list all applicable DIR registration numbers contact information on Section 00400, Bid Form, Attachment D, DESIGNATION OF SUBCONTRACTORS.

**21.05** Bidders' attention is directed to the provisions of the Subletting and Subcontracting Fair Practices Act, beginning with California Public Contract Code Section 4100, related to penalties for use of unauthorized Subcontractors or by making unauthorized substitutions.

**21.06** Alternate subcontractors shall not be listed for the same work.

## ARTICLE 22 — NOT USED

## ARTICLE 23 — NOT USED

## ARTICLE 24 — DEBARMENT OF CONTRACTORS AND SUBCONTRACTORS

**24.01** In accordance with the provisions of the California Labor Code, contractors or subcontractors may not perform work on a public works project with a subcontractor who is ineligible to perform work on a public project pursuant to section 1777.1 or section 1777.7 of the Labor Code. Any contract on a public works project entered into between a contractor and a debarred subcontractor is void as a matter of law. A debarred subcontractor may not receive any public money for performing work as a subcontractor on a public works contract. Any public money that is paid to a debarred subcontractor by the Contractor shall be returned to the District. The Contractor shall be responsible for the payment of wages to workers of a debarred subcontractor used on the Work.

## ARTICLE 25 — IRAN CONTRACTING ACT CERTIFICATION

**25.01** Each Bidder shall submit the Iran Contracting Act Certification form (Section 00400, Bid Form, Attachment H) required by the Iran Contracting Act of 2010, Public Contract Code section 2200 et seq. with its Bid.

## ARTICLE 26 — SALES AND OTHER APPLICABLE TAXES, PERMITS, LICENSES AND FEES

**26.01** Contractor and its subcontractors performing work under this Contract will be required to pay California sales tax and other applicable taxes, and to pay for permits, licenses and fees required by the agencies with authority in the jurisdiction in which the work will be located, unless otherwise expressly provided by the Contract Documents. Bidders shall include all applicable taxes and fees that are in effect or reasonably anticipated on the bid date in their bid price.

## ARTICLE 27 — SHEETING, SHORING AND BRACING

**27.01** Pursuant to the provisions of California Labor Code Section 6707, each Bid submitted shall contain, in the bid item indicated, the amount included in its Bid for adequate sheeting, shoring, and bracing, or equivalent method, for the protection of life and limb in trenches and open excavation, which shall conform to applicable safety orders. By listing this sum, the Bidder warrants that its action does not convey tort liability to the District, the Engineer, the Construction Manager, and their employees, agents, and subconsultants.

## ARTICLE 28 — OFFER OF ASSIGNMENT OF ANTITRUST ACTIONS

**28.01** As provided by Public Contract Code Section 7103.5, in submitting a Bid to the District, the Bidder offers and agrees that if the Bid is accepted, it does assign to the District all rights, title, and interest in and to all causes of action it may have under Section 4 of the Clayton Act (15 U.S.C. Section 15) or under the Cartwright Act (Chapter 2 [commencing with Section 16700] of Part 2 of Division 7 of the Business and Professions Code), arising from purchases of goods, materials, or services by the Bidder for sale to the District pursuant to the Bid. Such assignment shall be made and become effective at the time the District tenders final payment to the Bidder.

## ARTICLE 29 — BIDDERS INTERESTED IN MORE THAN ONE BID

**29.01** No person, firm, or corporation, under the same or different name, shall make, file, or be interested in more than one Bid for the same work unless alternate Bids are called for. A person, firm, or corporation may, however, submit sub-proposals or quote prices on materials to more than one Bidder.

**29.02** Pursuant to California Public Contract Code Section 7106, Bidders shall execute and furnish with their Bids Section 00400, Bid Form, Attachment G, NON-COLLUSION DECLARATION. Reasonable grounds to believe that any individual, partnership, corporation, or combination is interested in more

than one Bid for the proposed Work may cause rejection of all Bids in which that individual, partnership, corporation, or combination is interested.

## ARTICLE 30 — RETURN OF BIDDER'S SECURITY

**30.01** The Bid guarantees of the three lowest Bidders will be retained until the Agreement is signed, evidence of insurance provided, and satisfactory bonds furnished or other disposition made thereof.

**30.02** The Bid guarantees of all Bidders except the three lowest, responsive Bids will be returned within twenty-one (21) calendar days after the Bids are opened.

**30.03** If all Bids are rejected and no award is made, all Bid guarantees will be returned within ten (10) calendar days of the decision by the District not to award the Contract, and in any event not later than seventy (70) calendar days after the Bids are opened.

## ARTICLE 31 — RELIEF OF BIDDERS

**31.01** Attention is directed to the provisions of California Public Contract Code §5100 through §5107 that set forth the criteria and procedures for relief of Bidders, and for authorizing Contract Award to another Bidder.

## ARTICLE 32 — AWARD OF CONTRACT

**32.01** After the Bids have been opened and read, they will be checked for accuracy and compliance with the Contract Documents. If a Contract is awarded, it will be to the lowest responsible, Bidder submitting a responsive Bid. All Bids will be compared on the basis of the Engineer's estimate of the quantities of work to be done. The District reserves the right to reject an unbalanced Bid which is a Bid having nominal or artificially reduced prices for some bid items and enhanced prices for other bid items.

**32.02** In the evaluation of any Bid, the District shall have the right to consider information provided by sources other than Bidder.

**32.03** The criteria which will be used to determine the lowest responsible Bidder submitting a responsive Bid are as follows:

A. Responsive Bid: Means a Bid which conforms in all material respects to the Contract Documents.

B. Responsible Bidder: Means a Bidder who has the qualifications, fitness, capacity and experience in all respects to perform fully the requirements under the Contract Documents and who has the integrity and reliability to assure good faith performance, including:

1. Financial, material, equipment, facility, and personnel resources and expertise necessary to meet contractual requirements;

2. A record of integrity;

3. A record of Successful Project Completions defined as:

a. Completion of project on time and without liquidated damages.

b. Completion of project without excessive defective work issues.

c. Completion of project without excess or meritless claims or disputes issues;

4. Qualified legally to contract with the District, and;

5. Has not failed to supply any necessary information in connection with the inquiry concerning responsibility.

**32.04** No Bidder may withdraw its Bid for the period of Days stated in Section 00400, Bid Form, after the date set for the opening thereof, and the Bid will be subject to acceptance by the District throughout this period.

**32.05** The Contract, if awarded, will be to that responsible Bidder submitting the lowest responsive Total Base Bid Price as stated in Section 00400, Bid Form, subject to District's right to reject any or all Bids and to waive any informality or irregularity in the Bids or in the bidding procedures.

**32.06** The time period within which Award of Contract may be made is subject to an extension of such further period as may be agreed upon in writing between the District and the Bidder.

**32.07** Only one Contract will be awarded.

**32.08** After Contract award, no Contract is formed until all Contract Bonds and Insurance documents have been accepted by the District and the Agreement is signed by the District; the Contractor submits the signed Contractor's Certification regarding Worker's Compensation; and the Agreement is signed by the District.

## ARTICLE 33 — CONTRACT BONDS

**33.01** The successful Bidder (hereinafter "Contractor") must pay all Contract Bond premiums, costs thereof, and incidental thereto.

**33.02** Each Contract Bond must be signed by both Contractor and the Sureties.

**33.03** As a condition to the District signing the Agreement, the successful Bidder must file with District on the bond forms furnished by the District, the two surety bonds in the amounts and for the purposes noted below, duly executed by a Surety company meeting the requirements of Article 21 herein.

**33.04** The Payment Bond must be in an amount of one hundred percent (100%) of the Contract Sum as determined from the prices in the Bid Form, including the base Bid and all additive and/or deductive Bid items accepted by the District and identified in the Award, and shall inure to the benefit of persons performing labor or furnishing materials in connection with the Work. This bond must be maintained in full force and effect until all Work is completed and accepted by District, and until all claims for materials and labor have been paid.

**33.05** The Performance Bond must be in an amount of one hundred percent (100%) of the Contract Sum as determined from the prices in the Bid Form, including the base Bid and all additive and/or deductive Bid items accepted by the District and identified in the Award, and must be so conditioned as to ensure the faithful performance by Contractor of all Work. It shall also include the replacing, or making acceptable, of any defective materials or faulty workmanship during the Guarantee period(s).

**33.06** If any Surety or Sureties are deemed unsatisfactory at any time by District, District will notify Contractor, and Contractor must forthwith substitute a new Surety or Sureties satisfactory to District. No further payment will be deemed due or made until the replacement Sureties qualify and are accepted by District.

**33.07** All changes to the Contract Sum, Contract Time, or Contract Documents may be made without securing the consent of the Surety or Sureties on the Contract Bonds.

**33.08** Sureties must be California admitted Sureties.

## ARTICLE 34 — INSURANCE

**34.01** Contractor will be required to furnish to District, concurrently with execution of the Agreement, insurance documents evidencing coverage as required by Section 00700, Insurance and Indemnification.

## ARTICLE 35 — EXECUTION OF CONTRACT AGREEMENT

**35.01** The form of Agreement which the successful Bidder, as Contractor, must execute, and the form of Contract Bonds and Insurance coverage that it must provide are included in the Bid Documents and must be carefully examined by each Bidder. All Contract Bonds, policies or certificates of insurance, and Insurance policy endorsements must be delivered with or before the delivery of the signed Agreement form, and must be acceptable to District.

**35.02** The Bidder to whom the Contract is awarded by District must, within fifteen (15) calendar Days after Bidder's receipt of Section 00500, Notice of Award, sign and deliver the following documents to the District Engineer at Sausalito-Marin City Sanitary District located at 1 East Road, Sausalito, California 94965:

A. One (1) original and one (1) copy of the signed Agreement form furnished by District. See Section 00510, Agreement; and

B. One (1) original and two (2) copies of the Faithful Performance Bond. See Section 00540, Performance Bond"; and

C. One (1) original and two (2) copies of the Payment Bond. See Section 00550, Payment Bond Form; and

D. Policies of Insurance, Insurance certificates and endorsements as required by the Contract Documents; and

E. Worker's Compensation Certification. See Section 00560, Contractor's Worker's Compensation Certification.

**35.03** Should Contractor begin Work in advance of the start date for the Work, as stated in the Notice to Proceed, the Work will be considered as having been done at Contractor's risk as a volunteer.

## ARTICLE 36 — FAILURE TO EXECUTE CONTRACT AGREEMENT

**36.01** Failure of the successful Bidder to execute the Agreement in the form satisfactory to District is just cause for the annulment of the Award and the forfeiture of the Bidder's Security.

**36.02** Failure of the successful Bidder to sign and return the Agreement within fifteen (15) calendar Days after notification of Award by the District constitutes failure to execute the Agreement.

**36.03** Failure to return required Contract Bonds and insurance documents within fifteen (15) calendar Days after notification of Award by the District constitutes failure to execute the Agreement.

**36.04** The failure to execute the Agreement or to furnish the bonds or evidences of insurance required by these Instructions to Bidders within fifteen (15) calendar days after receiving written notice of the Award of the Contract constitutes default. In case of default, the District may, at its sole discretion, award the Contract to the next lowest responsive and responsible Bidder or may re- advertise the project for new Bids. If a more favorable Bid is received by re-advertising, the defaulting Bidder agrees that it shall have no claim against the District including for a refund, should a more favorable Bid be received via re-advertising.

**36.05** If a Bidder to whom an award is made fails or refuses for any reason to execute the Contract or fails to furnish any or all of the required insurance or Contract Bonds in proper form, within the time stated, it is agreed and stipulated between District and the Bidder to whom any award is made that damage has been and will be sustained by the District. It is further agreed by the District and any and all Bidders that it will be impractical and extremely difficult to fully ascertain and determine the actual damage that the District will sustain by such delay and failure to provide timely or in full the required documentation and to properly and fully execute the Contract Documents. All parties who submit a Bid under the Notice Inviting Bids are hereby advised and, by submitted Bids agree, that the damages suffered by the District by such delay under these circumstances is difficult to precisely ascertain, and further are advised and agree that in the event that the provisions of this paragraph are triggered, the amount of the Bidder's bond or check is agreed to as the liquidated damages payable by such Bidder(s). This Bidder's bond or check will be collected and held by the District as the sole property of the District for full compensation for the damages suffered by the District as a result of the Bidder's failure to timely and completely execute the Agreement and furnish the bonds and evidences of insurance as required.

## ARTICLE 37 — NO ORAL AGREEMENTS

**37.01** No conversation with any officer, employee, agent or Consultant of District, either before, during, or after the execution of the Agreement, affects or modifies any terms or obligations contained in the

Contract Documents, nor entitle Contractor to any adjustment in the Contract Time or Contract Sum whatsoever.

## ARTICLE 38 — BID PROTEST

**38.01** The lack of a prompt procedure to resolve disputes regarding the bidding process would impair the District's ability to carry out its purpose of constructing this Project in a timely manner. Therefore, to the maximum extent authorized by law and notwithstanding any other procedures specified in documents referenced herein, all disputes and/or protests regarding the bidding process shall be subject to the following procedures. In submitting a Bid to the District for this Project, the Bidder agrees to comply with and to be bound by the following Bid protest procedures

**38.02 Pre-Bid**

A. If any potential Bidder believes that any part of the form or content of the Contract Documents, including, without limitation, the Bidder experience and qualification requirements, is vague, ambiguous, gives an unfair advantage or unfairly limits competition, such Bidder must give notice and protest on such grounds to the District Representative as soon as practical, but in no event later than ten (10) working days before the original noticed date for receiving Bids. The District shall, within five (5) working days upon receiving any such protest(s), review the same and publish a written response thereto.

B. Any pre-bid protest shall include:

1. The protest document shall contain a complete and detailed statement of the factual and/or legal basis for the protest and, with respect to any authority relied upon, a copy of said authorities shall be provided.

2. The protest shall identify the specific portion(s) of the Bidding or Contract Documents that form the basis for the protest.

3. The protest shall include the name, address, telephone number, fax number and email address of the protestant, and if applicable, the person representing the protesting party.

C. The procedure and time limits set forth in these Bid protest procedures are mandatory and are the Bidder’s sole and exclusive remedy in the event of a pre-bid protest related to the form or content of the Contract Documents. Failure to comply with these procedures shall constitute a waiver of any right to further pursue the protest, including, without limitation, filing a Bid or award protest on the grounds applicable to a pre-bid protest, filing a Government Code claim or filing legal proceedings.

**38.03 Bid of Award Protest**

A. Any protest relating to any particular Bid opened by the District or the award of the Contract must be submitted in writing to the District Representative before 5:00 p.m. on the Fifth (5th) working day after the District has received and opened Bids.

B. The initial protest document must contain a complete statement of the basis for the protest, and all supporting documentation. The protest must state the facts and refer to the specific portion(s) of the document that forms the basis for the protest.

C. The party filing the protest must have actually submitted a Bid for the Work. A subcontractor of a party submitting a Bid for the Work may not submit a Bid protest. A party may not rely on the Bid protest submitted by another Bidder, but must timely pursue its own protest.

D. The protest must include the name, address, telephone number, fax number and email address of the person representing the protesting party.

E. The party filing the protest must concurrently transmit a copy of the initial protest document and any attached documentation to all other parties with a direct financial interest which may be adversely affected by the outcome of the protest. Such parties shall include all other Bidders who appear to have a reasonable prospect of receiving an award depending upon the outcome of the

protest, and delivery to all such parties must be in a manner to ensure their receipt on the same day the protest is filed.

F. The District will give the protested Bidder five (5) working days from the date the protest is filed and served to submit a written response. The responding Bidder shall transmit the response to the protesting Bidder concurrent with delivery to the District.

G. The procedure and time limits set forth in this paragraph are mandatory and are the Bidder's sole and exclusive remedy in the event of a Bid or award protest. The Bidder's failure to comply with these procedures shall constitute a waiver of any right to further pursue the Bid or award protest, including filing a Government Code Claim or legal proceedings.

H. The District will review all timely protests prior to award of the Contract. The District will issue a prompt decision on the protest. The District will not be required to hold an administrative hearing to consider any protests, but may do so at its option. At the time of the District Board's consideration of the Project Contract award, the District Board of Directors will also consider the merits of any timely protests in its determination of the lowest responsible responsive Bidder. Nothing in these procedures for protesting a particular Bid or award of the Contract will be construed as a waiver of the District's right to reject all Bids.

## ARTICLE 39 — ESCROW BID DOCUMENTS

### PROGRAM

**39.01** The lowest monetary Bidder shall submit, within three (3) business days after receipt of Bids, one copy of all documentary information generated in preparation of Bid prices for this Project. This material is hereinafter referred to as "Escrow Bid Documents." The Escrow Bid Documents of the Successful Bidder will be held in escrow for the duration of the Contract. The District may request Escrow Bid Documents of another Bidder should the determination of lowest responsive monetary Bidder change. Should another Bidder receive such a request, they will have five (5) business days after receipt of the request to furnish all Escrow Bid Document information to the District as specified in this Article 39.

**39.02** The Successful Bidder agrees, as a condition of award of the contract, that the Escrow Bid Documents constitute the complete, only, and all documentary information used in preparation of its Bid. No other Bid preparation information shall be able to be furnished in support of any claims or request for compensation, and said documents may be accessed by the District, and used, in addressing any and all requests for additional compensation considered in resolving disputes.

**39.03** Nothing in the Escrow Bid Documents shall change or modify the terms or conditions of the Contract Documents.

### OWNERSHIP

**39.04** The Escrow Bid Documents are, and shall always remain, the property of Contractor, subject only to joint review by District and Contractor, as provided herein. The District stipulates and expressly acknowledges that the Escrow Bid Documents, as defined herein, may constitute trade secrets, corporate financial information, or be otherwise proprietary and/or privileged. This acknowledgment is based on District's express understanding that the information contained in the Escrow Bid Documents is not known outside the Bidder's business, is known only to a limited extent and only by a limited number of employees of the Bidder, is safeguarded while in Bidder's possession, is extremely valuable to Bidder, and could be extremely valuable to Bidder's competitors by virtue of it reflecting Bidder's contemplated techniques of construction. District acknowledges that the Bidder may have expended substantial sums of money in developing the information included in the Escrow Bid Documents and further acknowledges that it would be difficult for a competitor to replicate the information contained therein. The District further acknowledges that the Escrow Bid Documents and the information contained therein are made available to District only because such action is an express prerequisite to award of the contract. The District further acknowledges that the Escrow Bid Documents include a compilation of information used in the Bidder's business, intended to give the Bidder an opportunity to obtain an advantage over competitors who do not know of or use the contents of the documentation.

**39.05** The District agrees to safeguard the Escrow Bid Documents, and all information contained therein, against disclosure to the fullest extent permitted by law.

**PURPOSE**

**39.06** Escrow Bid Documents will be used to assist in the negotiation of price adjustments and Change Orders and in the settlement of disputes, claims, and other controversies. Escrow Bid Documents may be used by the District prior to award of Contract to confirm Bidder has met the Contractor's self-performance of the Work percentage found in the Supplementary General Conditions, Paragraph 1.5, Subcontractors. Escrow Bid Documents will not be used for pre- award evaluation of Contractor's anticipated methods of construction or to assess Contractor's qualifications for performing the Work.

**FORMAT AND CONTENTS**

**39.07** Bidders may submit Escrow Bid Documents in their usual cost estimating format. It is not the intention of this Section to cause the Bidder extra work during the preparation of the Bid, but to ensure that the Escrow Bid Documents will be adequate to enable complete understanding and proper interpretation for their intended use. The Escrow Bid Documents shall be in the language of the Specifications. It is required that the Escrow Bid Documents clearly itemize the estimated costs of performing the work of each Bid item contained in the Bid schedule. Bid items should be separated into sub items as required to present a complete and detailed cost estimate and allow a detailed cost review.

**39.08** The Escrow Bid Documents shall include all quantity takeoffs; crew; equipment; calculations of rates of production and progress; copies of quotations from equipment manufacturers, Subcontractors, and Suppliers; and memoranda, narratives, consultants' reports, add/deduct sheets, and all other information used by the Bidder to arrive at the prices contained in the Bid Form.

**39.09** Estimated costs should be broken down into the Bidder's usual estimate categories, such as direct labor, repair labor, equipment operation, equipment ownership, expendable materials, permanent materials, and subcontract costs as appropriate. Plant and equipment and indirect costs should be detailed in the Bidder's usual format. Contractor's allocation of plant and equipment, indirect costs, contingencies, markup, and other items to each Bid item shall be included.

**39.10** All costs shall be identified. For Bid items amounting to less than $10,000, estimated unit costs are acceptable without a detailed cost estimate, provided that labor, equipment, materials, and subcontracts, as applicable, are included, and provided that indirect costs, contingencies, and markup, as applicable, are allocated. Contract Documents provided by the District should not be included in the Escrow Bid Documents unless needed to comply with the requirements of this Section.

**SUBMITTAL**

**39.11** The Escrow Bid Documents shall be submitted in a sealed container no later than three (3) business days after receipt of Bids. The container shall be clearly marked on the outside with the Bidder's name, date of submittal, project name, and the words "Escrow Bid Documents". The Escrow Bid Documents shall be accompanied with the certification found in Section 00400, Bid Form, Attachment J, BID DOCUMENT CERTIFICATION, signed by an individual authorized by the Bidder to execute the Bid Form, stating that the material in the Escrow Documentation constitutes the complete, only, and all documentary information used in preparation of the Bid and that he has personally examined the contents of the Escrow Bid Documents container and has found that the documents in the container are complete. Prior to Award, Escrow Bid Documents of the apparent Successful Bidder will be unsealed, examined, organized, and inventoried by representatives of District, together with members of Contractor's staff who are knowledgeable in how the Bid was prepared. This examination is to ensure that the Escrow Bid Documents are authentic, legible, and complete. It will not include review of, and will not constitute approval of, proposed construction methods, estimating assumptions, or interpretations of Contract Documents. This examination is subject to the condition that the Escrow Bid Documents may constitute trade secrets, corporate financial information, or be otherwise proprietary and/or privileged as described in the Paragraph entitled, "Ownership", and shall be treated accordingly. Examination will not alter any condition(s) or term(s) of the Contract.

**39.12** If all the documentation required in the Paragraph entitled "Format and Contents," has not been included in the original submittal, additional documentation shall be submitted, at District's discretion, prior to award of the contract. The detailed breakdown of estimated costs shall be reconciled and revised, if appropriate, by agreement between Contractor and District before making the Award.

**39.13** If the Contract is not awarded to the apparent Successful Bidder, the Escrow Bid Documents of the Bidder next to be considered for Award shall be processed as described above.

**39.14** Timely submission of complete Escrow Bid Documents is an essential element of the Bidder's responsibility and a prerequisite to Contract Award. Failure to provide the necessary Escrow Bid Documents will be sufficient cause for District to reject the Bid.

**39.15** If the Bidder's Bid is based on subcontracting any part of the Work, each Subcontractor whose total subcontract price exceeds five percent (5%) of the total Contract Price proposed by the Bidder shall provide separate Escrow Bid Documents to be included with those of the Bidder. These documents will be opened and examined in the same manner and at the same time as the examination described above for the apparent Successful Bidder.

**39.16** If Contractor subcontracts any portion of the Work after award, the District retains the right to require Contractor to submit Escrow Bid Documents from the Subcontractor before the subcontract is approved.

END OF SECTION

# SECTION 00210

## ACCESS, INDEMNITY AND RELEASE AGREEMENT

POTENTIAL BIDDER: _____

OWNER: Sausalito-Marin City Sanitary District

SITE: Treatment Plant

PROJECT: Screw Press Relocation Project

In consideration of the Sausalito-Marin City Sanitary District ("District"), permitting the undersigned potential bidder ("Bidder") to have access to and to conduct investigations, tests and/or inspections on, the Site, the Bidder hereby agrees as follows:

A. To the greatest extent permitted by law, Bidder hereby releases, and shall defend, indemnify and hold harmless District, and their respective officers, employees, consultants, representatives, and agents, and all other parties having any other interest in the Site, against any claim or liability, including attorney's fees, arising from or relating to any Site- related access, investigation, test, inspection and/or other activity conducted by Bidder or any of Bidder's officers, employees, consultants, representatives, and/or agents, regardless of whether claim or liability is caused in part by the negligence of the District or by any released and indemnified party.

B. Bidder hereby waives the provisions of California Civil Code Section 1542 which provides as follows:

   1. A general release does not extend to claims which the creditor does not know or suspect to exist in his favor at the time of executing the release, which if known by him, must have materially affected his settlement with the debtor.

C. Bidder shall, prior to disturbing the existing site and/or adjacent property, provide written notice of its intent and action plan, obtain the consent of the District, and fully execute this Access, Indemnity and Release Agreement. Bidder shall repair any damage to the Site or adjacent property resulting from activities authorized hereunder, and comply with and be subject to all other requirements and obligations described or referenced in Contract Documents.

D. Attached hereto (or to be delivered separately to the District before Bidder's visit to the Site) is a certificate for comprehensive general liability and auto liability insurance and workers compensation insurance satisfying the requirements of Section 00700- Article 13, Insurance and Indemnification.

E. Although this Access, Indemnity and Release Agreement is not a Contract Document, it shall be fully effective and binding regardless of whether Bidder submits a Bid for the subject Project, is awarded a contract for the Project, or otherwise.

Name of Bidder: _____

Signed By: _____

Name: _____

Title: _____

*Note: If a Corporation, this Indemnity Agreement must be signed by either the Corporation's Chairman, President or Vice-President.*

Address: _____

_____

Telephone: _____

California Contractors License #: _____

END OF SECTION

# SECTION 00300

# SUPPLEMENTAL PROJECT INFORMATION AVAILABLE TO BIDDERS

## ARTICLE 1 — PURPOSE OF SUPPLEMENTAL PROJECT INFORMATION

### 1.01 GENERAL

A. The information referenced in this Section 00300 can be provided by the District electronically free of charge. Where files are too large to send via e-mail they can be provided on a flash drive provided by the Contractor.

B. The information is furnished as reference material and is not part of the Contract Documents.

C. The information is to be used by Bidders “For Information Only”.

### 1.02 DISTRICT’S DISCLAIMER

A. The District assumes no responsibility for completeness or accuracy of survey investigations, records compiled therefrom, or interpretation(s) contained in the subsequent report(s).

B. Survey investigations were performed for purposes of study and design, and there is no expressed or implied warranty that conditions indicated in the report(s) are representative of those existing throughout the Project, structures, or site.

C. Conditions differing substantially from those indicated in the information referenced in Section 00300, Supplemental Project Information Available to Bidders, may be encountered.

## ARTICLE 2 — SUPPLEMENTAL PROJECT INFORMATION AVAILABLE TO BIDDERS

### 2.01 EXISTING RECORD DOCUMENTS

A. Previous construction activities have occurred at portions of the Site. The following record drawings have been used by the Engineer in preparing the Contract Documents and are available for review during regular business hours at the District offices, upon 48 hours’ notice to District. The District makes no warranty as to the accuracy of this information:

1. “Sludge Dewatering Project,” dated June 2008.
2. "Treatment and Wet Weather Flow Upgrade Project," dated July 2022.

END OF SECTION

Name of Bidder: _____

**SECTION 00400**

**BID FORM**

**SAUSALITO-MARIN CITY SANITARY DISTRICT**
**MARIN COUNTY, CALIFORNIA**

**Project Title: SCREW PRESS RELOCATION PROJECT**

**THIS BID IS SUBMITTED BY:**

Name of Bidder: _____

| **SUBMIT BID TO:** | **BID OPENING:** |
|---|---|
| **Kevin Rahman, District Engineer**<br>**Sausalito-Marin City Sanitary District,**<br>**1 East Road**<br>**Sausalito, California 94965** | **District's Main Office parking lot**<br>**Sausalito-Marin City Sanitary District,**<br>**1 East Road**<br>**Sausalito, California 94965** |
| **NO LATER THAN: 2:00 P.M.**<br>**DATE OF BID: October 23, 2024** | **Right after 2:00 P.M.,**<br>**October 23, 2024** |

TO: Honorable Board of Directors

BID IS SUBMITTED ON: _____, 2024 (Month/Day)

**IMPORTANT NOTE:**

All prices and bids must be in ink or typewritten. No pencil figures or erasures are permitted. Mistakes may be crossed out and corrections inserted adjacent thereto and must be initialed in ink by the person submitting the Bid. Changes in or additions to the Bid Form, recapitulations of the work bid upon, alternative bids, or any other modifications of the Bid Form which are not specifically called for in the Bid Form, will result in rejection of the bid by the District. The District will treat all such bids as not being responsive to the Invitation for Bids. The District will not consider any oral or telephonic or email modification of any bid submitted.

Proposed prices shall be for the total net price including all applicable taxes and charges (unless otherwise specified), delivered F.O.B., Project site. Information must be furnished complete in compliance with the Contract Documents. The information requested and the manner of submission are essential to permit prompt evaluation of all Bids on a fair and uniform basis. Accordingly, the District reserves the right to declare as non-responsive, and reject any Bid in which material information requested is not furnished or where indirect or incomplete answers or information is provided.

Name of Bidder: _____

## TABLE OF CONTENTS


| SECTION | | PAGE |
|---|---|---|
| I | BIDDER REPRESENTATIONS | 3 |
| II | ADDENDA | 4 |
| III | BID SCHEDULE | 5 |
| IV | COMPLETION | 6 |
| V | BID GUARANTY | 6 |
| VI | NON-COLLUSION DECLARATION | 7 |
| VII | SUBCONTRACTOR LISTING | 7 |
| VIII | ATTACHMENTS | 7 |
| IX | BIDDER'S CALIFORNIA CONTRACTOR'S LICENSE INFORMATION | 8 |
| Attachment A | | 14 |
| Certification of Bidder's Experience and Qualifications | | 14 |
| Attachment B | | 24 |
| Certification of Electrical Subcontractor's Experience and Qualifications | | 24 |
| Attachment C | | 32 |
| PUBLIC WORKS CONTRACTOR REGISTRATION CERTIFICATION | | 32 |
| Attachment D | | 33 |
| Designation of Subcontractors | | 33 |
| Attachment E | | 35 |
| Schedule of Major Equipment and Material Suppliers | | 35 |
| Attachment F | | 38 |
| Bid Bond | | 38 |
| Attachment G | Non-Collusion Declaration | 40 |
| Attachment H | | 42 |
| Iran Contracting Act Certification | | 42 |
| Attachment I | | 44 |
| Attachment J | | 46 |
| Bid Document Certification | | 46 |

Name of Bidder: _____

## I BIDDER REPRESENTATIONS

The undersigned Bidder proposes and agrees, if this Bid is accepted, to enter into an agreement with District in the form included in the Contract Documents to perform all Work as specified or indicated in the Contract Documents within the specified time and for the price indicated in this Bid and in accordance with the other terms and conditions of the Contract Documents.

The undersigned Bidder accepts all of the terms and conditions of the Invitation to Bid and Instructions to Bidders, including without limitation, those dealing with the disposition of Bid security. The Bid will remain subject to acceptance for ninety (90) days after the Bid opening, or for such longer period of time that Bidder may agree to in writing upon request of District.

As provided by Section 4552, et. Seq., of the California Government Code, in submitting a Bid to the District, the Bidder offers and agrees that if the Bid is accepted, it will assign to the District all rights, title, and interest in and to all causes of action it may have under Section 4 of the Clayton Act (15 U.SC. Section 15) or under the Cartwright Act (Chapter 2 (Chapter 2 [commencing with Section 16700] of Part 2 of Division 7 of the Business and Professions Code), arising from purchases of goods, materials, or services by the Bidder for sale to the District pursuant to the bid. Such assignment shall be made and become effective at the time the District tenders final payment to the Bidder.

In submitting this Bid, the undersigned Bidder represents that:

Bidder has watched District's entire pre-bid video posted electronically on http://www.smcsd.net.

| **Verification that Bidder has watched the entire pre-bid video identifying site specific conditions.** | **Signature of Bidder** |
|---|---|
| | |

Bidder has visited the site and become familiar with and satisfied itself as to the general, local, and site conditions that may affect cost, progress, and performance of the Work.

| **Date of mandatory pre-bid site visit** | **Name of representative who visited all project sites** | **Signature of Bidder** |
|---|---|---|
| | | |
| | | |
| | | |

Bidder is familiar with and has satisfied itself as to all federal, state, and local laws and Regulations and Permits that may affect cost, progress, and performance of the Work.

Bidder has carefully studied all reports of explorations and tests of subsurface conditions at or contiguous to the Site and all drawings of physical conditions in or relating to existing surface or subsurface structures at or contiguous to the Site which have been identified in the Contract Documents.

Name of Bidder: _____

Bidder has obtained and carefully studied (or assumes responsibility for having done so) all additional or supplementary examinations, investigations, explorations, tests, studies and data concerning conditions (surface, subsurface and underground facilities) at or contiguous to the Site which may affect cost, progress, or performance of the Work or which relate to any aspect of the means, methods, techniques, sequences, and procedures of construction to be employed by Bidder, including applying the specific means, methods, techniques, sequences, and procedures of construction expressly required by the Contract Documents to be employed by Bidder, and safety precautions and programs incident thereto.

Bidder does not consider that any further examinations, investigations, explorations, tests, studies, or data are necessary for the determination of this Bid for performance of the Work at the price(s) bid and within the times and in accordance with the other terms and conditions of the Contract Documents.

Bidder is aware of the general nature of work to be performed by District and others at the Site that relates to the Work as indicated in the Contract Documents.

Bidder has correlated the information known to Bidder, information and observations obtained from visits to the Site, reports and drawings identified in the Contract Documents, and all additional examinations, investigations, explorations, tests, studies, and data with the Contract Documents.

As to the nature and scope of the Work, Bidder has given the District written notice of all conflicts, errors, ambiguities, or discrepancies that Bidder has discovered in the Contract Documents, and the written resolution thereof by the District, if made, is acceptable to Bidder, and where said conflicts, etc., have not been resolved through the interpretations or clarifications by the District because of insufficient time or otherwise, Bidder has included in the Bid the greater quantity or better quality of Work, or compliance with the more stringent requirement resulting in a greater cost.

The Contract Documents are generally sufficient to indicate and convey understanding of all terms and conditions for the performance of the Work for which this Bid is submitted.

## II ADDENDA

Bidder has purchased a complete set of Contract Documents and carefully examined and studied the Contract Documents, all related information available to Bidders as defined in the Contract Documents, and the following Addenda, receipt of all of which is hereby acknowledged. A Bid may be deemed non-responsive if all Addenda issued by Owner are not listed.

| Addendum Number | Addendum Date | Signature of Bidder |
|---|---|---|
| | | |
| | | |
| | | |
| | | |
| | | |

Name of Bidder: _____

## III BID SCHEDULE

Pursuant to your published Invitation for Bids for the above-referenced project, and in accordance with the approved Plans and Specifications for that project, the following Bid for said entire project is submitted by the firm indicated on this Bid Form.

The undersigned Bidder proposes and agrees to contract with the District to perform all of the above work, including subsidiary obligations as defined in the Contract Documents for the prices indicated in the BID SCHEDULE below.

Pursuant to the provisions of the California Labor Code Section 6707, each bid submitted shall contain, in the bid, the amount included for adequate sheeting, shoring, and bracing, or equivalent method, for the protection of life and limb in trenches and open excavation, which shall conform to applicable safety orders. By listing this sum in base bid item 2 below, the Bidder warrants that its action does not convey tort liability to the Owner, the Engineer, the Construction Manager, and other employees, agents, and subconsultants.

Further in submitting its Bid, the undersigned Bidder understands and agrees that that the Total Bid Price are each determined by the sum total of all respective bid item amounts in the applicable Bid Schedule shown below. In the event the addition of the bid item extended amounts does not equal the Total Bid Price the corrected addition of all bid item extended amounts will govern and the Owner will correct the respective total(s) accordingly. In case of discrepancy between words and figures, words will prevail.

Bid Items are further described in Section 01200, Measurement and Payment

Name of Bidder: _____

**BID SCHEDULE**

| Bid Items | | | | |
|---|---|---|---|---|
| Item | Description | Approx. quantity | Unit | Total bid item price, dollars |
| 1. | Mobilization/Demobilization including SWPPP (not to exceed 6% of Total Bid Price) | 1 Job | L.S. | |
| 2. | Demolition | 1 Job | L.S. | |
| 3. | Screw Press Relocation | 1 Job | L.S. | |
| 4. | Screw Press Platform | 1 Job | L.S. | |
| 5. | Polymer Feed System | 1 Job | L.S. | |
| 6. | Digested Sludge Pump and Piping | 1 Job | L.S. | |
| 7. | Sludge Disposal During Construction | 1 Job | L.S. | |
| 8. | All Work in accordance with the Contract Documents, with the exception of work included under bid Items 1 through 7 | 1 Job | L.S. | |

TOTAL BID PRICE (Items 1 through 8) $_____

TOTAL BID PRICE (in words)_____

_____

**Bid prices shall include everything necessary for the completion of the work stipulated in the Contract Documents, including but not limited to providing the materials, equipment, tools, plant and other facilities, and the management, superintendence, labor and services. Bid prices shall include all federal, state and local taxes.**

The lowest bid will be based on the Total Bid Price. Bid prices shall include everything necessary for the completion of the work stipulated in the Contract Documents, including but not limited to providing the materials, equipment, tools, plant and other facilities, and the management, superintendence, labor and services. Bid prices shall include all federal, state and local taxes.

## IV COMPLETION

In accordance with the Specifications, the undersigned Bidder agrees to plan the Work and to prosecute it with such diligence that said Work shall be commenced within ten (10) days after the date of Notice to Proceed and shall be completed within the contract completion times specified in the Agreement. Furthermore, the undersigned Bidder accepts the liquidated damages specified in the Agreement in the event of failure to complete the Work within the specified times.

## V BID GUARANTY

Bid security must be a Bidders Bond, a certified check or cashiers check payable to the Sausalito-Marin City Sanitary District, or cash. Bids secured by personal checks or personal guarantees will

be rejected. Bid security must be in an amount not less than ten percent (10%) of the Total Bid Price.

## VI NON-COLLUSION DECLARATION

The Bidder swears, deposes and says that he, she or it, as the party making the foregoing Bid, that the Bid is not made in the interest of, or on behalf of, any undisclosed person, partnership, company, association, organization, or corporation; that the Bid is genuine and not collusive or sham; that the Bidder has not directly or indirectly induced or solicited any other Bidder to put in a false or sham Bid, and has not directly or indirectly colluded, conspired, connived, or agreed with any Bidder or anyone else to put in a sham Bid or to refrain from bidding; that the Bidder has not in any manner, directly or indirectly, sought by agreement, communication, or conference with anyone to fix the bid price of the Bidder or any other Bidder, or to fix any overhead, profit, or cost element of the bid price, or that of any other Bidder, or to secure any advantage against the public body awarding the contract of anyone interested in the proposed contract; that all statements contained in the Bid are true; and, further, that the Bidder has not, directly or indirectly submitted his or her bid price or any breakdown thereof, or the contents thereof, or divulged information or data relative thereto, or paid, and will not pay, any fee to any corporation, partnership, company association, organization, bid depository, or to any member or agency thereof to effectuate a collusive or sham Bid.

Any person executing this affidavit on behalf of the Bidder that is a corporation, partnership, joint venture, limited liability company, limited liability partnership, or any other entity, hereby represents that he or she has full power to executed, and does execute, this affidavit on behalf of the Bidder.

## VII SUBCONTRACTOR LISTING

In accordance with the California Public Contract Code, Division 2, Part 1, Chapter 4, Section 4100, and following, the subcontractors listed on the Bid Form attachment will perform the indicated work of improvement on the project.

## VIII ATTACHMENTS

The Bidder shall complete all parts of, and submit with its Bid, the following attachments:

A. Certification of Bidder's Experience and Qualifications.

B. Public Works Contractor Registration Certification

C. Designation of Subcontractors

D. Schedule of Major Equipment and Material Suppliers

E. Bid Bond

F. Non-Collusion Declaration

G. Iran Contracting Act Certification

H. Debarment Certification

I. Section 00100- CONFIRMATION OF MANDATORY SITE VISIT

In addition, the following attachment requires submittal within three (3) business days following the opening of Bids:

A. Item C – Bidder's Financial Information marked "Confidential"

B. Certification of Electrical Subcontractor's Experience and Qualifications.

C. Bid Document Certification

## IX BIDDER'S CALIFORNIA CONTRACTOR'S LICENSE INFORMATION

The undersigned Bidder is licensed in accordance with Chapter 9, Division 3 of California Business and Professions Code and Section 3300 of the California Public Contract Code, and the laws of the State of California

Bidder's Valid California Contractor's License No. _____

Classification(s) _____

Expiration Date: _____

Bidder has contracted under this license number for _____ Years

## X BIDDER'S CALIFORNIA PUBLIC WORKS PROJECT REGISTRATION INFORMATION

The undersigned Bidder is registered with the Department of Industrial Relations pursuant to Labor Code Section 1725.5.

Bidder's Valid Public Works Registration No. _____

Registration Date: _____

Expiration Date: _____

**The undersigned hereby swears and certifies under the penalty of perjury that all representations made herein are true.**

Name of Bidder: _____

If Bidder is:

**An Individual**

Name (typed or printed): _____

By: _____
(Individual's signature)

Doing business as: _____

Business Address: _____

Phone Number: ( ) _____ FAX Number: ( ) _____

Email Address of Authorized Representative: _____

**A Partnership**

Partnership Name (typed or printed): _____

By: _____
(Signature of general partner- attach evidence of authority to sign)

Name (typed or printed): _____

Business Address: _____

Phone Number: ( ) _____ FAX Number: ( ) _____

Email Address of Authorized Representative: _____

Name of Bidder: _____

**A Corporation**

Corporation Name (typed or printed): _____

State of Incorporation: _____

By: _____ (SEAL)
(Signature - attach evidence of authority to sign)

Name (typed or printed): _____

Title: _____

(CORPORATE SEAL)

_____

Attest: _____
(Signature of Corporate Secretary)

Name (typed or printed): _____

Date of Qualification to do business is _____

Business Address: _____

Phone Number: ( ) _____ FAX Number: ( ) _____

Email Address of Authorized Representative: _____

Name of Bidder: _____

**A Joint Venture**

Joint Venture Name (typed or printed): _____

By: _____
(Signature of Joint Venture Partner - attach evidence of authority to sign)

Name (typed or printed): _____

Name (typed or printed): _____

Title: _____

Business Address: _____

Phone Number: ( ) _____ FAX Number: ( ) _____

Email Address of Authorized Representative: _____

Joint Venture Name (typed or printed): _____

By: _____
(Signature of Joint Venture Partner - attach evidence of authority to sign)

Name (typed or printed): _____

Title: _____

Business Address: _____

Phone Number: ( ) _____ FAX Number: ( ) _____

Email Address of Authorized Representative: _____

Each joint venturer must sign. Add additional Joint Venture names and information below if needed. The manner of signing for each individual, partnership, and corporation that is a party to the joint venture should be in the manner indicated above.

Name of Bidder: _____

**A Limited Liability Company**

Limited Liability Company Name (typed or printed): _____

By: _____
(Signature of Managing Partner or Officer - attach evidence of authority to bind the LLC under the LLC's articles of organization)

Name (typed or printed): _____

_____

Title: _____

Business Address: _____

Phone Number: ( ) _____ FAX Number: ( ) _____

Email Address of Authorized Representative: _____

**THIS PAGE IS INTENTIONALLY LEFT BLANK**

Name of Bidder: _____

**ATTACHMENT A**

**CERTIFICATION OF BIDDER'S EXPERIENCE AND QUALIFICATIONS**
(To Be Submitted with Bid)

PROJECT: _____

The undersigned Bidder represents that it is duly licensed, competent, and knowledgeable and has the special skills on the nature, extent and inherent conditions of the work to be performed on this project. Bidder further acknowledges that the conditions inherent in the construction of particular facilities may create, during construction, unusual or unsafe conditions hazardous to persons and property. Bidder expressly acknowledges that it is aware of such risks and that it has the skill and experience to foresee and to adopt and implement protective measures to adequately and safely perform the construction work with respect to such hazards. The prospective Bidder's qualifications and responses to the questions set forth below are part of the District's evaluation of the Bidder's eligibility to receive the award based on the Bidder's responsibility and responsiveness. The Owner has determined that only Bidders meeting the mandatory minimum experience and qualification requirements set forth below will have the requisite quality, fitness, capacity and experience to perform the highly complex and vital construction work on this Project.

If the Bidder is a Joint Venture of two or more companies, each participant in the Joint Venture shall separately complete this ATTACHMENT A, **CERTIFICATION OF BIDDER'S EXPERIENCE AND QUALIFICATIONS,** and each participant shall meet the mandatory prior company project experience requirement and provide project information for each Joint Venture participant in the format found below. The Joint Venture's named Project Manager information should be the same for each participant's certification. Each Joint Venture participant shall also provide the required financial information found in Item C below.

**A. QUESTIONS REGARDING BIDDER'S RESPONSIBILITY AND FITNESS TO CONTRACT FOR THE WORK.**

**If the Bidder answers "Yes" to any of questions 1 through 9 below, the Bidder must provide on a separate sheet a complete, detailed explanation of all of the facts and circumstances concerning the reasons for answering "Yes", and shall provide written documentation supporting its response.**

1. Has your company's contractor's license been revoked at any time in the last five years?

   ☐ Yes ☐ No

2. Within the last five years, has a surety company completed a contract on your company's behalf, or paid for the completion of a contract to which your company was a party, because your company was considered to be in default or was terminated with cause by the project owner?

   ☐ Yes ☐ No

3. At the time of submitting this minimum qualification questionnaire, is your company ineligible to bid on or be awarded a public works contract, or perform as a subcontractor on a public works contract, pursuant to either California Labor Code Section 1777.1 or Labor Code Section 1777.7?

   ☐ Yes ☐ No

4. At any time in the last five years, has your company, or any of its officers or partners been convicted of a crime involving the awarding of a contract for a government construction project, or the bidding or performance of any federal, state or local government contract?

   ☐ Yes ☐ No

5. Has your company or any if its owners, officers or partners ever been found liable in a civil suit for making any false claim or material misrepresentation to any federal, state or local public agency or entity?

   ☐ Yes ☐ No

6. In the last five years, has your company been denied an award of a public works contract based on a finding by any federal, state or local public agency that your company was not a responsible Bidder?

   ☐ Yes ☐ No

7. In the last three years, has your company been debarred from bidding on, or completing, any government agency or public works construction contract for any reason?

   NOTE: If there is a pending administrative or court action challenging a debarment, you need not include that debarment in responding to this question.

   ☐ Yes ☐ No

8. As a result of your company's actions or inactions, has the federal EPA, Region IX, or California Air Quality Management or Air Pollution Control District, or Regional Water Quality Control Board, or State Water Resources Control Board successfully and finally assessed penalties either against your company, or against an owner for violations occurring on a project on which your company was the contractor, three or more times in the past three years?

   NOTE: If there is a pending administrative or court action appealing a penalty assessment, you need not include that penalty assessment in responding to this question.

   ☐ Yes ☐ No

9. As a result of your company's actions or inactions, has the federal EPA, Region IX, or California Air Quality Management or Air Pollution Control District, or Regional Water Quality Control Board, or State Water Resources Control Board successfully and finally assessed a single penalty either against your company, or against an owner for a violation occurring on a project on which your company was the contractor, for a penalty amount over $100,000 in the last three years?

   NOTE: If there is a pending administrative or court action appealing a penalty assessment, you need not include that penalty assessment in responding to this question.

   ☐ Yes ☐ No

10. At any time in the last five years, has your company, or any of its officers or partners submitted a formal claim against the District?

    ☐ Yes ☐ No

11. In the last five years, has your company achieved substantial completion on a project 6 months or more beyond the project's contractual completion date?

    ☐ Yes ☐ No

Name of Bidder: _____

**B. MANDATORY MINIMUM EXPERIENCE REQUIREMENTS**

The Bidder has been engaged in the contracting business, under the present business name for _____ years and has experience in work of a nature similar to this project which extends over a period of _____ years (Bidder must show at least eight (8) years of related experience). Work of similar nature is described below.

The Bidder, as a Contractor, has never failed to satisfactorily complete a contract awarded to him, except as follows: ☐ N/A ☐ Yes, if yes, explain on a separate, signed sheet:

For the District to consider the Bidder a responsible Bidder for this specific procurement, given the complexity and importance of the timely and successful completion of the Project to further interests of the District and its residents, the Bidder must provide all information required below demonstrating that it has performed at least **$6 Million** in construction volume on no more than **six (6)** projects completed over the past 8 years on one or more of the following types of projects:

> Industrial and/or Municipal Sewage Pumping Stations and/or Water and/or Wastewater Treatment Plants where the structural, mechanical, electrical, and instrumentation systems were part of the Contractor's contract.

The Bidder can include project(s) currently under construction, but only the total amount paid by the Owner(s) to date on uncompleted project(s) can be included in this summation of construction volume. The Bidder is allowed to list up to a maximum of six (6) projects of the types listed above, that combined, will add up to at least **$6 Million** in completed volume of work. Any projects listed below which are not as defined above will not be considered by the District in meeting this pre-requisite experience requirement. **For example, pipeline projects are not considered a sewage pump station or treatment plant.**

Bidder also certifies that Bidder self-performed with its own labor force, including equipment and materials, at least **forty percent (40%)** of the value of the Work on each of the projects listed below. The District considers this level of past self-performance demonstrates a benefit to a Project in terms of better control of cost, schedule and safety.

**Bidders are to complete this form and not attach their own form to the Bid Form.**

**Project #1** Name: _____

Owner: _____

Construction Cost: $ _____

Construction Time: _____ Calendar Days

Owner's Representative: _____

Owner's Representative Telephone No.: _____

Engineer or On-Site Construction Mgr.: _____

Engineer or On-Site CM's Telephone No.: _____

Date of Substantial Completion: _____

**Duration of Project (in months)** _____

Name of Bidder: _____

**Project #2** Name: _____

Owner: _____

Construction Cost: $ _____

Construction Time: _____ Calendar Days

Owner's Representative: _____

Owner's Representative Telephone No.: _____

Engineer or On-Site Construction Mgr.: _____

Engineer or On-Site CM's Telephone No.: _____

Date of Substantial Completion:

**Duration of Project (in months)** _____

**Project #3** Name: _____

Owner: _____

Construction Cost: $ _____

Construction Time: _____ Calendar Days

Owner's Representative: _____

Owner's Representative Telephone No.: _____

Engineer or On-Site Construction Mgr.: _____

Engineer or On-Site CM's Telephone No.: _____

Date of Substantial Completion: _____

**Duration of Project (in months)** _____

**Project #4** Name: _____

Owner: _____

Construction Cost: $ _____

Construction Time: _____ Calendar Days

Owner's Representative: _____

Owner's Representative Telephone No.: _____

Engineer or On-Site Construction Mgr.: _____

Engineer or On-Site CM's Telephone No.: _____

Date of Substantial Completion: _____

**Duration of Project (in months)** _____

Name of Bidder: _____

**Project #5** Name: _____

Owner: _____

Construction Cost: $ _____

Construction Time: _____ Calendar Days

Owner's Representative: _____

Owner's Representative Telephone No.: _____

Engineer or On-Site Construction Mgr.: _____

Engineer or On-Site CM's Telephone No.: _____

Date of Substantial Completion: _____

**Duration of Project (in months)** _____

**Project #6** Name: _____

Owner: _____

Construction Cost: $ _____

Construction Time: _____ Calendar Days

Owner's Representative: _____

Owner's Representative Telephone No.: _____

Engineer or On-Site Construction Mgr.: _____

Engineer or On-Site CM's Telephone No.: _____

Date of Substantial Completion: _____

**Duration of Project (in months)** _____

**Total Construction Volume of listed Project(s) above: $** _____

Name of Bidder: _____

**PROJECT MANAGER EXPERIENCE- To be submitted with Bid.**

The Bidder shall name below the Project Manager who will be assigned to this Project and will be personally present on-site or available at short notice at all times during construction. Bidder shall submit past completed water and/or wastewater treatment plant project experience of this person. List three completed water and/or wastewater treatment plant projects below where the individual named below held the position of Project Manager. One of the listed treatment plant projects must have a contract amount greater than **$2 million**. The demonstrated experience of the Project Manager must have been within the last ten (8) years.

Name of Project Manager: _____

Number of Years of Total Construction experience as a Project Manager assigned to the types of projects as defined above: _____years

Number of Years as a Project Manager for your Company: _____ years

List three completed treatment plant projects as defined above ***(sewage pump stations, water treatment plants and/or wastewater treatment plants)*** where the individual named above held the position of Project Manager. One of the projects must have a contract value of at least **$2 Million**.

**Project #1** Name: _____

Owner: _____

Construction Cost: $ _____

Construction Time: _____ Calendar Days

Owner's Representative: _____

Owner's Representative Telephone No.: _____

Engineer or On-Site Construction Mgr.: _____

Engineer or On-Site CM's Telephone No.: _____

Date of Substantial Completion (must be within the last ten (10) years): _____

**Duration of Project (in months)** _____

**Project #2** Name: _____

Owner: _____

Construction Cost: $ _____

Construction Time: _____ Calendar Days

Owner's Representative: _____

Owner's Representative Telephone No.: _____

Engineer or On-Site Construction Mgr.: _____

Name of Bidder: _____

_____

Engineer or On-Site CM's Telephone No.: _____

Date of Substantial Completion (must be within the last ten (10) years): _____

**Duration of Project (in months)** _____

**Project #3** Name: _____

Owner: _____

Construction Cost: $ _____

Construction Time: _____ Calendar Days

Owner's Representative: _____

Owner's Representative Telephone No.: _____

Engineer or On-Site Construction Mgr.: _____

Engineer or On-Site CM's Telephone No.: _____

Date of Substantial Completion(must be within the last ten (10) years) : _____

**Duration of Project (in months)** _____

This form is to be fully completed and submitted by the Bidder with the Bid. Bidder is not allowed to provide a substitute form of similar information.

The District will check project references listed to verify information provided along with skills and capacity represented by Bidder. It is very important that the Bidder verify that all contact information is current for each name listed above.

**Failure of the Bidder to provide current and valid project contact information, all information required by this Attachment A certification, and/or failure of the Bidder to meet both the pre-requisite Company and Project Manager experience may be grounds for the District to determine the Bidder to be non-responsive and/or non-responsible and therefore ineligible for contract award.**

**C. FINANCIAL INFORMATION- DO NOT SUBMIT THE FOLLOWING INFORMATION WITH YOUR BID! The three lowest Bidders shall submit, within three (3) business days following the bid opening date, the following information demonstrating that the Bidder has sufficient financial resources to provide all work necessary to complete the Project, including construction, start-up, and warranty services.**

1. Bidder must provide Bidder's most recent complete financial statement audited or reviewed by an independent CPA with accompanying notes and supplemental information. A financial statement that is not either reviewed or audited is not acceptable. Financial statement must be 2019 or later.
2. Bidder shall identify each claim filed against it in the last five (5) years by any project owner in arbitration or litigation seeking in excess of $100,000 and which (i) the project owner prevailed; or (ii) the resolution resulted in the project owner receiving an amount equal to or in excess of

55% of the amount asserted. For each such claim, Bidder shall provide the project name, date of the claim, name of the claimant, a brief description of the nature of the claim, the court in which the case was filed and a brief description of the status of the claim (pending or, if resolved, a brief description of the resolution and the amount of the resolution). Are there any pending claims against your company that should you lose the claim(s), would adversely affect your financial position or your ability to meet your obligations if awarded the contract for this project? If so, please explain.

**Claims Filed Against Bidder**

Project Name: _____

Date of Claim: _____

Claimant Name: _____

Court: _____

Status of Claim: _____

Explanation: _____

_____

Bidder shall identify each claim filed by it in the last five (5) years against any project owner in arbitration or litigation seeking in excess of $100,000 and which (i) the Bidder lost; or (ii) the resolution resulted in the Bidder receiving an amount equal to less than 50% of the amount asserted. For each such claim, Bidder shall provide the project name, date of the claim, name of the project owner, a brief description of the nature of the claim, the court in which the case was filed and a brief description of the status of the claim (pending or, if resolved, a brief description of the resolution and the amount of the resolution). Are there any pending claims by your company against a project owner that should you lose the claim(s), would adversely affect your financial position or your ability to meet your obligations if awarded the contract for this project? If so, please explain.

**Claims Filed By Bidder**

Project Name: _____

Date of Claim: _____

Claimant Name: _____

Court: _____

Status of Claim: _____

Explanation: _____

_____

Name of Bidder: _____

_____

_____

To the extent permitted by law, all financial information provided by Bidder that is marked "Confidential" or "Proprietary" shall be handled by the District as non-disclosable in accordance with California Public Records Act ( Government Code 6250). The District, upon receipt of the requested financial information shall treat the same as confidential and take such reasonable measures as to protect it from public access. If the District receives a request, whether via the Public Records Act and/or via a judicial process that seeks the publication and/or production of said information, District agrees to provide notice in writing to the entity whose information is sought to afford them an opportunity to challenge the third party's access and/or to seek to quash the judicial process which seeks the publication and/or production thereof.

**VERIFICATION AND SIGNATURE**

I, the undersigned, certify and declare that I have read all the foregoing answers to this Statement of Qualifications Questionnaire. I also certify and declare that I have personally reviewed and approved the information provided for the Company Experience, Project Manager Experience, Company Safety Information and Financial Information. I certify and declare that the foregoing is true and correct.

Signed this _____ day of _____, 20____

_____
Bidder's Name

_____ _____
Authorized Signature Date

_____
Title of Signator

**END OF CERTIFICATION OF BIDDER'S EXPERIENCE AND QUALIFICATIONS**

***(THIS PAGE LEFT BLANK INTENTIONALLY)***

Name of Bidder: _____

**ATTACHMENT B**

**CERTIFICATION OF ELECTRICAL SUBCONTRACTOR'S EXPERIENCE AND QUALIFICATIONS**
(To Be Submitted within Three Business Days after Bid Opening)

PROJECT: _____

**Important Note:** To be eligible for an award of Contract, the Bidder must submit to District, within three (3) days after bids are due, this signed Certification from the Electrical Subcontractor listed on Bidder's DESIGNATION OF SUBCONTRACTORS. If the Bidder does not list an Electrical Subcontractor for the electrical work, then Bidder must submit to District with its Bid this signed Certification of Bidder's experience and qualifications to self-perform the electrical work with the understanding that all references to Electrical Subcontractor in this certification shall mean Contractor, and Contractor shall possess independently the minimum standards of experience and qualifications set forth below. The Owner has determined that only Electrical Subcontractors meeting these mandatory minimum experience and qualification requirements will have the requisite quality, fitness, capacity and experience to perform the highly complex and vital electrical work on this Project. Failure of the Electrical Subcontractor or Bidder to meet or comply with the requirements of this certification, including, but not limited to, the mandatory minimum experience requirements and qualifications required herein, may be grounds for the Owner to determine the Bidder as non-responsive and/or non-responsible and ineligible for contract award. None of the requirements herein are to determine pre-qualification to bid on the Project, but are part of the Owner's evaluation of bids received.

The undersigned Electrical Subcontractor certifies that it is, at the time of bidding, and shall be, throughout the period of the contract, licensed under the provisions of Chapter 9, Division 3, of the Business and Professions Code of the State of California, to do the type of work contemplated in the Contract Documents. The Electrical Subcontractor shall further certify that it is skilled and regularly engaged in the general class and type of work called for in the Contract Documents.

The Electrical Subcontractor represents that it is competent, knowledgeable, and has special skills on the nature, extent, and inherent conditions of the work to be performed. The Electrical Subcontractor further acknowledges that there are certain peculiar and inherent conditions existent in the construction of the particular facilities which may create, during the construction program, unusual or peculiar unsafe conditions hazardous to persons and property. The Electrical Subcontractor expressly acknowledges that it is aware of such peculiar risks and that it has the skill and experience to foresee and to adopt and implement protective measures to adequately and safely perform the construction work with respect to such hazards.

<u>If the Electrical Subcontractor is a Joint Venture of two or more companies, each participant in the Joint Venture shall separately complete this ATTACHMENT B, CERTIFICATION OF ELECTRICAL SUBCONTRACTOR'S EXPERIENCE AND QUALIFICATIONS and each participant shall meet the mandatory prior company project experience requirement and provide project information for each Joint Venture participant in the format found below.</u>

**A. QUESTIONS REGARDING ELECTRICAL SUBCONTRACTOR'S RESPONSIBILITY AND FITNESS TO SUBCONTRACT FOR THE ELECTRICAL WORK.**

**If Electrical Subcontractor answers "Yes" to any of Questions 1 through 7 below, the Electrical Subcontractor must provide on a separate sheet a complete, detailed explanation of all of the**

**facts and circumstances concerning the reasons for answering "Yes", and shall provide documentation supporting its response.**

1. Has your company's contractor's license(s) been revoked at any time in the last five years?

   ☐ Yes ☐ No

2. Within the last five years, has a surety company completed a contract on your company's behalf, or paid for the completion of a contract to which your firm was a party, because your firm was considered to be in default or was terminated with cause by the project owner?

   ☐ Yes ☐ No

3. At the time of submitting this Certification of Electrical Subcontractor's Experience and Qualifications, is your company ineligible to bid on or be awarded a public works contract, or perform as a subcontractor on a public works contract, pursuant to either California Labor Code Section 1777.1 or Labor Code Section 1777.7?

   ☐ Yes ☐ No

4. At any time in the last five years, has your company, or any of its owners, officers or partners been convicted of a crime involving the awarding of a contract for a government construction project, or the bidding or performance of any federal, state or local government contract?

   ☐ Yes ☐ No

5. Has your company or any of its owners, officers or partners ever been found liable in a civil suit for making any false claim or material misrepresentation to any federal, state or local public agency or entity?

   ☐ Yes ☐ No

6. In the last five years has your company been denied an award of a public works contract based on a finding by any federal, state or local public agency that your firm was not a responsible Bidder?

   ☐ Yes ☐ No

7. In the last three years has your company been debarred from bidding on, or completing, any government agency or public works construction contract for any reason?
   NOTE: If there is a pending administrative or court action challenging a debarment, you need not include that debarment in responding to this question.

   ☐ Yes ☐ No

## B. ELECTRICAL SUBCONTRACTOR MANDATORY MINIMUM EXPERIENCE REQUIREMENTS

For the District to consider the Bidder a responsible Bidder for this specific procurement, given the complexity and importance of the timely and successful completion of the Project to further interests of the District and its residents, the Bidder must list an Electrical Subcontractor on Attachment D of the Bid Form that is properly experienced in work of similar nature to this project. To demonstrate such required experience, the Electrical Subcontractor must provide all information required below demonstrating that the Electrical Subcontractor has performed at least **$3 Million** in electrical and instrumentation construction volume on no more than **six (6)** projects completed over the past 8 years of the following types of projects where the Electrical Subcontractor completed all electrical and instrumentation portions of the project:

Name of Bidder: _____

Industrial and/or Municipal Sewage Pumping Stations and/or Water and/or Wastewater Treatment Plants

The Electrical Subcontractor can include project(s) currently under construction, but only the total amount paid by the Owner(s) on uncompleted project(s) can be included in this summation of construction volume. The Bidder is allowed to list up to a maximum of six (6) projects of the types listed above, that combined, will add up to at least **$3 Million** in completed volume of work. Any projects listed below which are not as defined above will not be considered by the District in meeting this mandatory minimum experience requirement. **For example, pipeline projects are not considered a sewage pump station or treatment plant.**

Bidder also certifies that Bidder self-performed with its own labor force, including equipment and materials, at least **forty percent (40%)** of the value of the Work on each of the projects listed below. The District considers this level of past self-performance demonstrates a benefit to a Project in terms of better control of cost, schedule and safety.

The Electrical Subcontractor also certifies that it self-performed with its own workforce at least fifty percent (50%) of the Work on each of the projects listed below.

**Bidders are to complete this form and not attach their own form to the Bid Form.**

**Project #1** Name: _____

Owner: _____

Electrical and
Instrumentation
Construction Cost: $ _____

Construction Time: _____ Calendar Days

Owner's Representative: _____

Owner's Representative Telephone No.: _____

Engineer or On-Site Construction Mgr.: _____

Engineer or On-Site CM's Telephone No.: _____

Date of Substantial Completion: _____

**Duration of Project (in months)** _____

**Project #2** Name: _____

Owner: _____

Electrical and
Instrumentation
Construction Cost: $ _____

Construction Time: _____ Calendar Days

Owner's Representative: _____

Owner's Representative Telephone No.: _____

Name of Bidder: _____

Engineer or On-Site Construction Mgr.: _____

Engineer or On-Site CM's Telephone No.: _____

Date of Substantial Completion: _____

**Duration of Project (in months)** _____

**Project #3** Name: _____

Owner: _____

Electrical and
Instrumentation
Construction Cost: $ _____

Construction Time: _____ Calendar Days

Owner's Representative: _____

Owner's Representative Telephone No.: _____

Engineer or On-Site Construction Mgr.: _____

Engineer or On-Site CM's Telephone No.: _____

Date of Substantial Completion: _____

**Duration of Project (in months)** _____

**Project #4** Name: _____

Owner: _____

Electrical and
Instrumentation
Construction Cost: $ _____

Construction Time: _____ Calendar Days

Owner's Representative: _____

Owner's Representative Telephone No.: _____

Engineer or On-Site Construction Mgr.: _____

Engineer or On-Site CM's Telephone No.: _____

Date of Substantial Completion: _____

**Duration of Project (in months)** _____

**Project #5** Name: _____

Owner: _____

Name of Bidder: _____

Electrical and
Instrumentation
Construction Cost: $ _____

Construction Time: _____ Calendar Days

Owner's Representative: _____

Owner's Representative Telephone No.: _____

Engineer or On-Site Construction Mgr.: _____

Engineer or On-Site CM's Telephone No.: _____

Date of Substantial Completion: _____

**Duration of Project (in months)** _____

**Project #6** Name: _____

Owner: _____

Electrical and
Instrumentation
Construction Cost: $ _____

Construction Time: _____ Calendar Days

Owner's Representative: _____

Owner's Representative Telephone No.: _____

Engineer or On-Site Construction Mgr.: _____

Engineer or On-Site CM's Telephone No.: _____

Date of Substantial Completion: _____

**Duration of Project (in months)** _____

**Total Construction Volume of listed Project(s) above: $ _____**

**Important Note: Any projects found on Electrical Subcontractor's completed projects list which are not as defined above will not be considered by the District in meeting this pre-requisite experience requirement. It is very important that Electrical Subcontractor provide current and valid project contact information for all projects listed above. All information should be checked for accuracy before completing this Attachment.**

**C. BONDING PROFILE**

At the time of submission of the bid the Electrical Subcontractor shall have an unencumbered bonding capacity equal to at least 100 percent of the Electrical Subcontract cost for this project.

Current Total Bonding Capacity:_____

Current Unencumbered Bonding Capacity:_____

Name of Bidder: _____

To verify the above information, the Owner will contact the Electrical Subcontractor's surety. The Electrical Subcontractor shall authorize its surety to release this information.

Surety:_____

Contact Person for Insurance Company:_____

Telephone Number:_____

Signed this ____ day of _____, 20 ____.

If the Bidder (Contractor) is satisfied with the financial capability and capacity of the Electrical Subcontractor as required for the performance of the work on the Project, the Bidder may indicate such by signing below and the Electrical Subcontractor will in such case not be required to provide the bonding information listed above.

Bidder acknowledgement of Electrical Subcontractor's financial capability and capacity and waiver of bond information:

_____ _____
Name of Bidder Date

_____ _____
Bidder, Signature Printed Name of person's Signature

**ELECTRICAL SUBCONTRACTOR VERIFICATION AND SIGNATURE**

I, the undersigned, certify and declare that I have read all the foregoing answers to this Statement of Qualifications Questionnaire. I also certify and declare that I have personally reviewed and approved the information provided for the Company Experience Information. I certify and declare that the foregoing is true and correct.

Signed this _____ day of _____, 20____

_____
Electrical Subcontractor's Name

_____ _____
Authorized Signature Date:

_____
Title of Signator

_____
Valid CA Contractors License No.

_____
License Classification

_____
Expiration Date

Name of Bidder: _____

**END OF CERTIFICATION OF ELECTRICAL SUBCONTRACTOR'S EXPERIENCE AND QUALIFICATIONS**

**(THIS PAGE LEFT BLANK INTENTIONALLY)**

Name of Bidder: _____

## ATTACHMENT C

## PUBLIC WORKS CONTRACTOR REGISTRATION CERTIFICATION

Pursuant to Labor Code sections 1725.5 and 1771.1, all contractors and subcontractors that wish to bid on, be listed in a bid proposal, or enter into a contract to perform public work must be registered with the Department of Industrial Relations. See http://www.dir.ca.gov/Public-Works/PublicWorks.html for additional information.

No bid will be accepted nor any contract entered into without proof of the contractor's and subcontractors' current registration with the Department of Industrial Relations to perform public work.

Bidder hereby certifies that it is aware of the registration requirements set forth in Labor Code sections 1725.5 and 1771.1 and is currently registered as a contractor with the Department of Industrial Relations.[1]

Name of Bidder:_____

DIR Registration Number:_____

DIR Registration Expiration:_____

Small Project Exemption: _____ Yes or _____ No

Unless Bidder is exempt pursuant to the small project exemption, Bidder further acknowledges:

- Bidder shall maintain a current DIR registration for the duration of the project.
- Bidder shall include the requirements of Labor Code sections 1725.5 and 1771.1 in its contract with subcontractors and ensure that all subcontractors are registered at the time of bid opening and maintain registration status for the duration of the project.
- Failure to submit this form or comply with any of the above requirements may result in a finding that the bid is non-responsive.

Name of Bidder_____

Signature_____

Name and Title_____

Dated_____

[1] If the Project is exempt from the contractor registration requirements pursuant to the small project exemption under Labor Code Sections 1725.5 and 1771.1, please mark "Yes" in response to "Small Project Exemption."

Name of Bidder: _____

**ATTACHMENT D**

**DESIGNATION OF SUBCONTRACTORS**
(To Be Submitted with Bid)

In compliance with the Subletting and Subcontracting Fair Practices Act of the Public Contract Code of the State of California, sections 4100 et seq., each bidder shall set forth below: (a) the name and the location of the place of business, (b) the California State Licensing Board contractor license number, (c) the Department of Industrial Relations public works contractor registration number, and (d) the portion of the work which will be done by each subcontractor who will perform work or labor or render service to the Contractor in or about the construction of the work in an amount in excess of one-half of one percent (1/2%) of the Contractor's Total Bid Price. Notwithstanding the foregoing, if the work involves the construction of streets and highways, including bridges, then the Contractor shall list each subcontractor who will perform work or labor or render service to Contractor in or about the work in an amount in excess of one-half of one percent (1/2%) of the Contractor's total Bid Price or $10,000, whichever is greater. No additional time shall be granted to provide the below requested information.

If no subcontractor is specified, for a portion of the work, or if more than one subcontractor is specified for the same portion of Work, then the Contractor shall be deemed to have agreed that it is fully qualified to perform that Work, and that it shall perform that portion itself.

The Bidder's attention is directed to the provisions found in Section 00200-20.0, WORK PERCENTAGES, which stipulates the percent of the Work to be performed with the Bidder's own forces.

| Work to be done by Subcontractor | Percent of Total Bid Price | Name of Subcontractor | Address of Business | CSLB Contractor License Number | DIR Registration Number |
|---|---|---|---|---|---|
| | | | | | |
| | | | | | |
| | | | | | |
| | | | | | |

Name of Bidder: _____

| Work to be done by Subcontractor | Percent of Total Bid Price | Name of Subcontractor | Address of Business | CSLB Contractor License Number | DIR Registration Number |
|---|---|---|---|---|---|
| | | | | | |
| | | | | | |
| | | | | | |
| | | | | | |
| | | | | | |
| | | | | | |
| | | | | | |

Name of Bidder _____

Signature _____

Print Name and Title _____

Dated _____

(USE ADDITIONAL SHEETS IF NECESSARY)

Name of Bidder: _____

## ATTACHMENT E

## SCHEDULE OF MAJOR EQUIPMENT AND MATERIAL SUPPLIERS

(To Be Submitted with Bid)

1. The undersigned Bidder represents that, if awarded the Contract, the items of major equipment and materials specified below will be supplied by the manufacturers or suppliers specified below. By so indicating, Bidder warrants that the equipment and materials manufactured and/or supplied by the named manufacturer or supplier will be provided on the Project unless review of submittal information or performance tests reveal that the equipment or material does not meet Contract requirements or the manufacturer or supplier is unable to meet the delivery requirements necessary to maintain progress of the Project based upon the accepted baseline construction schedule. Failure to indicate a manufacturer or supplier listed in the following schedule may render the Bid non-responsive and may be the basis for rejection of the Bid.

2. All major Equipment shall be bid according to the following:

(a) Not used.

(b) The following Major Equipment Schedule Table designates major equipment items to be provided. All costs for providing these equipment items shall be included in the Lump Sum Bid. The Bidder shall indicate which Manufacturer/Supplier of equipment he proposes to provide, by checking ONE of the named, listed items and, if the Bidder desires to propose an "or equal" equipment item, by writing in a proposed "or equal." If the Bidder writes in a proposed "or equal," he shall also check one of the named, listed items. It is the Bidder's responsibility that all equipment to be provided, either checked or proposed "or equal" write-in, meet the requirements of the Specifications.

(c) The opinion of the Engineer will be the final determination of whether a write-in “or-equal” meets the design intent. In the event that the Engineer allows the Bidder's proposed "or equal" material or equipment item for use as an "or equal”, the proposed "or equal" material or equipment item shall be provided for the amount included in the Lump Sum Bid with NO change in Contract price. Should the write-in proposed "or equal" item be determined "not equal" by the Engineer, then the Bidder hereby agrees to provide the checked Manufacturer/Supplier item for the amount included in his Lump Sum Bid. Should a Bidder fail to indicate which named manufacturer or supplier his Lump Sum Bid is based on, or checks more than one named Manufacturer/Supplier per listed equipment item, the Bidder hereby agrees to provide the Manufacturer/Supplier item noted as "A" for the amount included in his Lump Sum Bid with NO change in Contract Price.

(d) Allowances of proposed "or equal" equipment does not constitute a waiver of the Specifications. Proposed "or equal" equipment is defined as equipment proposed and named by the Bidder under the Manufacturer/Supplier column in the Major Equipment Schedule Table as equal and equivalent to the specified equipment.

(e) Proposed "or equal" equipment will only be considered after award and execution of contract. For each "or equal" (write-in) equipment item, Contractor shall submit a properly completed Section 01600.1 MATERIAL/ PRODUCT SUBSTITUTION REQUEST FORM, within thirty (30) calendar days after the date of the Notice to Proceed. Proposed “Or Equal” Substitution Form must be completely filled out, certified and include all required supporting documentation to allow Engineer to assess the "or equal" acceptability of the product or system. Failure to submit all the required information within the established time limit shall be grounds for determination that the proposed "or equal" major equipment item is "not equal" to the named, listed Manufacturer/Supplier equipment item.

(f) Within thirty (30) calendar days after receiving the proposed "or equal" major equipment submittals, the Engineer will notify Contractor, in writing, as to whether or not the submitted proposed "or equal" equipment, if any, are accepted as meeting the general specification requirements. The consideration of this equipment shall not be construed to indicate final acceptance by the District, nor relieve the Contractor and/or Manufacturer/Supplier of the equipment from providing the post-Contract award submittal information.

(g) To be deemed equal, the proposed "or equal” equipment shall be the same or better than the specified named product with respect to features, materials of construction, function, performance, reliability, quality, general dimensional configuration, operations and maintenance access and costs, and static and dynamic loads. Determination of equality in reference to the project design requirements will be made by the Engineer.

(h) No proposed "or equal" major equipment will be considered unless, in the opinion of the Engineer, it conforms to the Contract Drawings and Specifications in all respects, except for make and manufacturer and minor details.

(i) Design of this project is based upon the Manufacturer/Supplier equipment item noted as the "A" item in the Major Equipment Schedule Table. When a "B," "C," or "D" named item is named in the Major Equipment Schedule Table, the equipment or product of this "B," "C," or "D" named manufacturer or supplier is deemed "or equal" in quality; however, should a Bidder propose providing a "B," "C," or "D" named item, or proposed "or equal" (write-in) equipment, he shall comply with the following:

1) If the Bidder proposes "or equal" (write-in) equipment or equipment other than an "A" named manufacturer, he shall include in the Lump Sum Bid all additional costs (including all general construction, process mechanical, HVAC, plumbing, electrical, and instrumentation and control work), required to accommodate, furnish, and install the proposed equipment or material, training, and spare parts.

2) Contractor shall reimburse the District for Engineer's time and expense charges associated with the review of proposed "or equal" Major Equipment or System submittals, subsequent notification to Contractor of disposition, and any associated modifications to the Drawings.

Name of Bidder: _____

**MAJOR EQUIPMENT OR SYSTEM SCHEDULE**
**SUPPLIED BY CONSTRUCTION CONTRACTOR**

| SECTION | EQUIPMENT OR SYSTEM | NAME OF EQUIPMENT OR SYSTEM SELECTED<br>Indicate with a check mark within the ( ) |
|---|---|---|
| 11246 | Polymer Feed System | A. ( ) USGI (cleanwater1) Dynablend Polymer Feeder L4 Series<br>B. ( ) VeloDyne, Veloblend VM Series<br>C. ( ) Equal |
| 11312T | Double Disc Pump | A. ( ) Penn Valley, 4-inch Model 4DDSX30, no equal |

**END OF SCHEDULE OF MAJOR EQUIPMENT AND MATERIAL SUPPLIER**

Name of Bidder: _____

**ATTACHMENT F**

**BID BOND**
(To Be Submitted with Bid)

KNOW ALL MEN BY THESE PRESENTS, THAT WE, THE UNDERSIGNED _____ as principal; and _____ as Surety, are hereby held and bound unto the SAUSALITO-MARIN CITY SANITARY DISTRICT, hereinafter called the "District", in the sum of _____ dollars ($_____) which sum is equal to at least ten (10) percent of the total amount of the Bid, for the Work, payment of which sum, well and truly to be made, we hereby jointly and severally bind ourselves, our heirs, executors, administrators, successors, and assigns.

The condition of the above obligation is such that whereas the Principal has submitted to the District a certain Bid, attached hereto and hereby made a part hereof, to enter into a Contract in writing, for the construction of:

**_____ PROJECT**

NOW, THEREFORE,

a) If the Bid is rejected, or in the alternative,
b) If the Bid is accepted and the Principal shall sign and deliver a Contract, in the form of Contract attached hereto (all completed in accordance with said Bid and Contract), and shall in all other respects perform the agreement created by the acceptance of said Bid;

Then this obligation shall be void, otherwise the same shall remain in force and effect; it being expressly understood and agreed that the liability of the Surety for any and all default of the Principal hereunder shall be the amount of this obligation as herein stated.

The Surety, for value received, hereby stipulates and agrees that the obligations of said Surety and its bond shall be in no way impaired or affected by any extension of the time within which the District may accept sub bid, and said Surety does hereby waive notice of any such extension.

Should the District file an action in a court of law to enforce this bond, the prevailing party shall be entitled to recover any and all costs and fees associated with the litigation, including but not limited to attorneys' fees and experts' fees. The parties agree that proper venue and jurisdiction for such an action will be the Superior Court of California in Marin County; any party's rights to other venue or jurisdiction under law (such as California Code of Civil Procedure sections 392 et seq.) are expressly waived.

**IN WITNESS THEREOF,** the above-bounden parties have executed this instrument under their several seals this _____ day of _____, 20___, the name and corporate seal of each corporate party being hereto affixed and those presents duly signed by its undersigned representative, pursuant to authority of its governing body.

Name of Bidder: _____

**IN PRESENCE OF:**

Principal Signature _____ (Seal)

Principal Name _____

Business Address _____

Surety Signature _____

Surety Principal Name _____

Surety Name _____ (Seal)

Business Address _____

(Note: This bond must be signed and acknowledged by both the Principal and Surety before a Notary Public, and acknowledgments, with Notarial Seals, attached hereto. Surety must be authorized and licensed by the California Insurance Commissioner as an "admitted surety insurer.") 1/05

SUBMIT BOND OR OTHER CASH GUARANTEE AS PART OF YOUR BID

**END OF BID BOND**

Name of Bidder: _____

**ATTACHMENT G**
**NON-COLLUSION DECLARATION**

TO BE EXECUTED BY BIDDER AND SUBMITTED WITH BID

The undersigned declares:

I am the _____ of _____, the party making the foregoing bid.

The bid is not made in the interest of, or on behalf of, any undisclosed person, partnership, company, association, organization, or corporation. The bid is genuine and not collusive or sham. The bidder has not directly or indirectly induced or solicited any other bidder to put in a false or sham bid. The bidder has not directly or indirectly colluded, conspired, connived, or agreed with any bidder or anyone else to put in a sham bid, or to refrain from bidding. The bidder has not in any manner, directly or indirectly, sought by agreement, communication, or conference with anyone to fix the bid price of the bidder or any other bidder, or to fix any overhead, profit, or cost element of the bid price, or of that of any other bidder. All statements contained in the bid are true. The bidder has not, directly or indirectly, submitted his or her bid price or any breakdown thereof, or the contents thereof, or divulged information or data relative thereto, to any corporation, partnership, company association, organization, bid depository, or to any member or agent thereof to effectuate a collusive or sham bid, and has not paid, and will not pay, any person or entity for such purpose.

Any person executing this declaration on behalf of a bidder that is a corporation, partnership, joint venture, limited liability company, limited liability partnership, or any other entity, hereby represents that he or she has full power to execute, and does execute, this declaration on behalf of the bidder.

I declare under penalty of perjury under the laws of the State of California that the foregoing is true and correct and that this declaration is executed on _____[date], at _____[city], _____[state].

_____
(Signature)

_____
(Print Name)

_____
(Print Title)

_____
(Date)

***(THIS PAGE LEFT BLANK INTENTIONALLY)***

Name of Bidder: _____

**ATTACHMENT H**

**IRAN CONTRACTING ACT CERTIFICATION**
(To Be Submitted with Bid)

**(Public Contract Code Section 2200 *et seq.)***

As required by California Public Contract Code Section 2204, the Contractor certifies subject to penalty for perjury that the option checked below relating to the Contractor's status in regard to the Iran Contracting Act of 2010 (Public Contract Code Section 2200 et seq.) is true and correct:

☐ The Contractor is not:

(I) identified on the current list of persons and entities engaging in investment activities in Iran prepared by the California Department of General Services in accordance with subdivision (b) of Public Contract Code Section 2203; or

(II) a financial institution that extends, for 45 days or more, credit in the amount of $20,000,000 or more to any other person or entity identified on the current list of persons and entities engaging in investment activities in Iran prepared by the California Department of General Services in accordance with subdivision (b) of Public Contract Code Section 2203, if that person or entity uses or will use the credit to provide goods or services in the energy sector in Iran.

☐ The District has exempted the Contractor from the requirements of the Iran Contracting Act of 2010 after making a public finding that, absent the exemption, the District will be unable to obtain the goods and/or services to be provided pursuant to the Contract.

☐ The amount of the Contract payable to the Contractor for the work does not exceed $1,000,000.

Signed_____

Titled_____

Firm_____

Date_____

**Note:** In accordance with Public Contract Code Section 2205, false certification of this form shall be reported to the California Attorney General and may result in civil penalties equal to the greater of $250,000 or twice the Contract Price, termination of the Contract and/or ineligibility to bid on contracts for three years.

***(THIS PAGE LEFT BLANK INTENTIONALLY)***

Name of Bidder: _____

**ATTACHMENT I**

**DEBARMENT CERTIFICATION**
(To Be Submitted with Bid)

By submitting its bid the bidder certifies in accordance with California Public Contract Code Section 6109 that neither the bidder nor any subcontractor included on the list of proposed subcontractors submitted with the bid is ineligible to perform work on public works projects pursuant to California Labor Code Sections 1777.1 or 1777.7. In accordance with California Public Contract Code Section 6109, contractors and subcontractors who are ineligible to perform work on public works projects pursuant to California Labor Code Sections 1777.1 or 1777.7 may neither bid on, be awarded or perform as a subcontractor on public works projects.

By: _____
(Official authorized to bind Bidder)

Title: _____

Firm: _____

***(THIS PAGE LEFT BLANK INTENTIONALLY)***

Name of Bidder: _____

**ATTACHMENT J**

**BID DOCUMENT CERTIFICATION**

(To Be Submitted within three (3) Business Days after the District has served written notice to all Bidders of the District's determination of the lowest monetary Bidder)

Project Name: _____ **PROJECT**

The undersigned hereby certifies that the bid documentation contained herein constitutes the complete, only and all documentary information used in the preparation of the Bid as specified in the Instructions to Bidders, and that I have personally examined these contents and have found that this bid documentation is complete. Furthermore, I certify that all Subcontractors whose total subcontract amount exceeds five percent (5%) of our Total Bid Amount have furnished separate Escrow Bid Documents and their bid documentation is also furnished herein.

By: _____

Title: _____

Firm: _____

***(THIS PAGE LEFT BLANK INTENTIONALLY)***

**SECTION 00500**

**NOTICE OF AWARD**

Date: _____

To: _____
(Name of Bidder)

Address: _____

_____

Project Name: _____

You are notified that your Bid dated _____ for the above Contract has been considered. You are the Successful Bidder and are awarded a Contract for constructing the _____ Project.

The Total Contract Price of your Contract is _____ (**$_____**).

You must comply with the following conditions precedent within fifteen (15) calendar days of the date you receive this Notice of Award.

1. Deliver to the District at **1 East Road, Sausalito, California 94965** two (2) signed copies of the Agreement, as found in Section 00510, leaving the date blank. Deliver to the attention of: **Kevin Rahman, District Engineer**.

2. Deliver with the Agreement the appropriate Certificate of Authorization found in Sections 00515, 00520, 00525, or 00530.

3. Deliver with the Agreement the Contract Bonds as specified and found in Sections 00540, Performance Bond Form**,** and 00550, Payment Bond for Public Works.

4. Deliver with the Agreement all required original Insurance Certificates and endorsements as required in Sections 00700, Article 13- Insurance and Indemnification.

5. Deliver with the Agreement a signed Workers' Compensation Insurance Certificate found in Section 00560.

Failure to comply with these conditions within the time specified will entitle the District to consider you in default, annul this Notice of Award and declare your Bid security forfeited.

Within ten (10) calendar days after you comply with the above conditions, the District will return to you one fully executed Agreement for your records.

Sausalito-Marin City Sanitary District

By: _____
Kevin Rahman, District Engineer

END OF SECTION

**SECTION 00510**

**AGREEMENT**

**AGREEMENT FOR THE CONSTRUCTION OF THE**

**SCREW PRESS RELOCATION PROJECT**

THIS AGREEMENT made and entered into this ___ day of _____, 2024, between the Sausalito-Marin City Sanitary District, a public entity organized and existing under the laws of the State of California, hereinafter referred to as the "District" or "Owner" and , _____ , hereinafter referred to as the "Contractor";

**RECITALS**

WHEREAS, the District Board of Directors heretofore caused Drawings and Specifications for the Work hereinafter mentioned to be prepared, and therefore did approve and adopt the Drawings and Specifications; and

WHEREAS, the District Board of Directors did cause to be published for the time and in the manner required by law, a Notice inviting sealed Bids for the performance of the Work; and

WHEREAS, the Contractor, in response to such Notice, submitted to the District Board of Directors within the time specified in the Notice, and in the manner provided for therein, a sealed Bid for the performance of the Work specified in the Contract Documents, which the Bid, and the other Bids submitted in response to the Notice, the District publicly opened and canvassed in the manner provided by law; and

WHEREAS, the Contractor was the lowest responsible Bidder for the performance of the Work, and the District Board of Directors, as a result of the canvass of the Bids, did determine and declare Contractor to be the lowest responsible Bidder for the Work and award a Contract to Contractor to do the Work referred to in the aforementioned plans and specifications; and

WHEREAS, Contractor is ready, willing and able to complete all Work specified in the Contract Documents, in accordance with the Specifications, Drawings and all other terms and conditions of the Contract Documents; and

NOW, THEREFORE, in consideration of the mutual covenants hereinafter, the District and Contractor agree as follows:

## ARTICLE 1 — ARTICLE 1 – SCOPE OF WORK

**1.1 The Work.** The Contractor shall furnish all labor, materials, tools, apparatus, equipment, transportation, insurance, bonds, special services and skill to construct and complete in good workmanlike and substantial manner to the satisfaction of the District all the Work called for, and in the manner designated in, and in strict conformity with the Contract Documents for the project entitled: **SCREW PRESS RELOCATION PROJECT**. All incidental work not shown on the Plans or specified herein which is necessary to complete the Work so as to provide the project described, or shown, shall be furnished and installed as part of this Contract at no additional cost to the District.

**1.2 Location of Work.** The Work will be performed at the following location: SMCSD Waste Water Treatment Plant as shown on the Contract Drawings.

**ARTICLE 2 – CONTRACT DOCUMENTS**

**2.1 Contract Documents.**

The Contract Documents consist of the following documents:

- Bidding Requirements (Sections 00100 through 00400. Does not include Section 00300, Supplemental Project Information Available to Bidders);
- Contracting Requirements (Sections 00510 through 00800);
- General Requirements (Division 1);
- Technical Specifications (Division 2 and all other Divisions following);
- District Standard Specifications
- Contract Drawings;
- Addenda (numbers ___ to____, inclusive);
- Permits from other agencies as may be required by law; and
- All other documents incorporated by reference into these Contract Documents.
- The following which may be delivered or issued on or after the Effective Date of the Agreement and are not attached hereto:
  - Notice to Proceed (Section 00600);
  - Field Directive(s);
  - Change Order(s);
  - Construction Change Directive; and
  - Field Order(s).

**2.2 Not Contract Documents**. There are no Contract Documents other than those listed in this Section 00510, Article 2, Contract Documents, Section 00300, Supplemental Project Information Available to Bidders, and the information supplied therein, are not Contract Documents. The Contract Documents may only be amended, modified or supplemented as provided for in Section 00700, General Conditions and Section 00800, Supplemental General Conditions**.**

**2.3 Definitions and Terms.** Unless otherwise specifically provided herein, all terms, words and phrases defined in Section 00700- 1.02, Definitions of Words and Terms, shall have the same meaning and intent in this Agreement.

**2.4 Entire Contract; Interpretation.** This Agreement, together with the Contract Documents, constitutes the entire agreement between the Parties with respect to the subject matter hereof, and supersedes all prior oral or written agreements between the Parties with respect thereto (including without limitation, District's award of the Contract to Contractor and any applicable letter of intent), unless such agreement is expressly incorporated herein. District makes no representations or warranties, express or implied, not specified in this Agreement or the Contract Documents. This Agreement and the Contract Documents are the product of negotiation between the Parties. Accordingly, any rule of construction of contracts (including, without limitation, California Civil Code §1654) that ambiguities are to be construed against the drafting party shall not be employed in the interpretation of this Agreement or the Contract Documents.

**2.5 Severability.** Any provision or part of the Contract Documents held to be void or unenforceable under any Law or Regulation shall be deemed stricken, and all remaining provisions shall continue to be valid and binding upon District and Contractor, who agree that the Contract Documents shall be reformed to replace such stricken provision or part thereof with a valid and enforceable provision that comes as close as possible to expressing the intention of the stricken provision.

**2.6 Amendments.** The terms of this Agreement or the Contract Documents shall not be waived, altered, modified, supplemented or amended in any manner whatsoever except as authorized by the Contract documents or by a written instrument signed by the Parties.

**2.7 Further Assurances.** The Parties shall cooperate fully in the execution of any and all other documents and in the completion of any additional actions that may be necessary or appropriate to give full force and effect to the terms and intent of this Agreement and the Contract Documents.

**ARTICLE 3 – CONTRACT PRICE**

**3.1 Contract Price Breakdown**. Subject to additions and deductions by Change Order(s) as provided in the Contract Documents, the District agrees to pay and Contractor agrees to accept, in full payment for completion of the Work in accordance with the Contract Documents as follows:

| Bid Items | | | | |
|---|---|---|---|---|
| Item | Description | Approx. quantity | Unit | Total bid item price, dollars |
| 1. | Mobilization/Demobilization including SWPPP (not to exceed 6% of Total Bid Price) | 1 Job | L.S. | |
| 2. | Demolition | 1 Job | L.S. | |
| 3. | Screw Press Relocation | 1 Job | L.S. | |
| 4. | Screw Press Platform | 1 Job | L.S. | |
| 5. | Polymer Feed System | 1 Job | L.S. | |
| 6. | Digested Sludge Pump and Piping | 1 Job | L.S. | |
| 7. | Sludge Disposal During Construction | 1 Job | L.S. | |
| 8. | All Work in accordance with the Contract Documents, with the exception of work included under bid Items 1 through 7 | 1 Job | L.S. | |

TOTAL BID AWARD PRICE (Items 1 through 8) $_____

TOTAL BID AWARD PRICE (in words)_____

_____

The above Total Contract Price includes all allowances, if any, provided for in the Contract Documents. Progress and final payments shall be in accordance with the General Conditions.

When, under the provisions of this Agreement, the District shall charge any sum of money against Contractor, District shall deduct and retain the amount of such charge from the amount of the next succeeding progress estimate, or from any other moneys due or that may become due to the Contractor from District. If, on completion or termination of the Contract, sums due Contractor are insufficient to pay District's charges against him, the District shall have the right to recover the balance from Contractor or its sureties.

Compensation for Unit Price Items shall be based upon the unit prices stated in above schedule times the actual quantities or units of work and materials performed or furnished. Unit prices paid by the District may change

depending on actual quantities or units or work completed in accordance with Section 00700-9.04, Increased or Decreased Quantities.

**3.2** **Substitution of Securities for Money Withheld**. At any time prior to final payment, Contractor may request substitution of securities for any money withheld by the District to ensure performance of the Agreement in the manner as provided by California Public Contract Code §22300. At the expense of the Contractor, securities equivalent to the money withheld may be deposited with the District or with an approved financial institution as escrow agent according to a separate Security Agreement. Securities eligible for substitution shall include those listed in §16430 of the California Government Code or bank or savings and loan certificates of deposit.

**ARTICLE 4 – CONTRACT TIMES**

**4.1** **Time is of the Essence.** All time limits for Milestones, if any, Substantial Completion, and completion and readiness for final payment as stated in the Contract Documents are of the essence of this Agreement.

**4.2** **Commence Work**. Contractor shall commence execution of the Work on the date established in the Notice to Proceed. The District reserves the right to modify or alter the Commencement Date of the Work.

**4.3** **Days to Achieve Contract Times.** The Contractor shall diligently execute the Work to complete each Milestone listed below within the following number of consecutive calendar days from the date established in the Notice to Proceed for the commencement of the Contract Time.

**Times Allowed for Completion**

| Contractual Completion Event | Completion Time (# of calendar days from Notice to Proceed date) or Seasonal Dates |
|---|---|
| Substantial Completion | 280 |
| Final Completion | 300 |

**Milestones** – Milestones are further defined in Section 01140, Work Restrictions and Section 00800, Supplementary Conditions.

**4.4** **Liquidated Damages**. The District and Contractor recognize that time is of the essence of this Agreement and that the District will suffer financial loss if the Work is not completed within the contract times specified in 4.3, **Days to Achieve Contract Times**. The actual fact of the occurrences of damages and the actual amount of the damages which District would suffer if the Work were not completed within the specified times set forth above are dependent upon many circumstances and conditions which could prevail in various combinations, and, from the nature of the case, it would be impracticable and extremely difficult to fix the actual damages.

Damages which District would suffer in the event of delay include loss of the use of the Project, and, in addition, expenses of prolonged employment of an architectural and engineering staff; costs of administration, construction management, inspection, and supervision; the loss suffered by the public within the District's constituent cities by reasons of the delay in the completion of the project to serve the public at the earliest possible time; and, costs associated with ongoing and extended permit compliance.

Accordingly, the District and the Contractor agree that as liquidated damages for delay, in accordance with California Government Code Section 53069.85, the Contractor will forfeit and pay to the District liquidated damages in the amounts set forth in the table below, per day for each and every calendar day that expires after the time for completion specified in the above section 4.3, Days to Achieve Contract Times, except as otherwise provided by extension of time pursuant to Section 00700-8.04, Time Extensions, of the General Conditions.

It is further understood and agreed in accordance with California Government Code Section 53069.85 that the liquidated damages sum specified in this provision is not manifestly unreasonable under the circumstances

existing at the time this Contract was made, and that the District may deduct liquidated damages sums in accordance with this provision from any payments due or that may become due the Contractor.

**Damages for Delays**

| Milestone | Contractual Completion Event | Dollars Per Day Liquidated Damages (Amount in Dollars) |
|---|---|---|
| | Substantial Completion | $1,500 |
| | Final Completion | $1,000 |

**4.6** **Damages for Violations of Environmental Impact Mitigation Requirements**. The Contractor recognizes that the District has defined environmental controls for the Work to promote compliance with the environmental impact mitigation requirements identified in the District's certified Final Initial Study / Mitigated Negative Declaration and related mitigation monitoring and reporting plan for the Work. In addition to the liquidated damages specified in Section 4.4, **Liquidated Damages**, the District and the Contractor agree that penalties imposed on and costs incurred by the District as a result of violations of such requirements caused by the actions or inactions of the Contractor, its employees, or subcontractors, the Contractor will forfeit and pay the District any and all penalties and costs for such violations, up to a maximum of $10,000 per calendar day. Costs related to such penalties and violations include, without limitation, District staff time, District equipment costs, materials, District's consultants and legal fees.

## ARTICLE 5 – INSURANCE AND BONDS

**5.1** **Insurance.** Contractor shall maintain in full force and effect at all times during the term of the Agreement, at its sole expense, policies of insurance in accordance with the General Conditions and the Supplementary Special Conditions. By execution of this Agreement, the Contractor certifies as follows:

"I am aware of the provisions of §3700 of the Labor Code which require every employer to be insured against liability for workers' compensation or to undertake self-insurance in accordance with the provisions of that code, and I will comply with such provisions before commencing the performance of the Work of this contract."

**5.2** **Faithfull Performance Bond and Payment Bond.** The Contractor, simultaneously with the execution of the Agreement, will be required to furnish a Faithful Performance Bond to guarantee the Faithful Performance of the Contract equal to one hundred (100%) of the Total Contract Price set forth in Article 4 and a Payment Bond required by Part 4, Title 15, Chapter 7, Division Three of the Civil Code of the State of California equal to one hundred percent (100%) of the Total Contract Price set forth in Article 4. The bonds must be issued by a surety company admitted in California and with a current A.M. Best's rating of no less than A-:VII or equivalent, unless otherwise approved by Agency.

Any alteration(s) made in any provision of this Agreement shall not operate to release any surety from liability on any bond required hereunder and the consent to make such alteration(s) is hereby given, and any surety on said bonds hereby waives the provisions of Sections 2819 and 2845 of the California Civil Code.

Contractor must submit the following document with the bonds: The original, or a certified copy, of the unrevoked appointment, power of attorney, bylaws or other instrument entitling or authorizing the person who executed the bond to do so.

## ARTICLE 6 – CITY'S REPRESENTATIVE(S) AND AUTHORITY'S CONSULTANTS

**6.1** **District's Representative**. The District has designated **Kevin Rahman,** or his/her designee to act as District's Representative. The District may change the individual(s) acting as District's Representative(s), or delegate one or more specific functions to one or more specific District's Representative at any time with notice and without liability to Contractor. Each District's Representative is the beneficiary of all Contractor obligations to

the District, including without limitation, all releases and indemnities. All documents requiring the signature/approval of District shall be signed by the District's Representative.

**6.2 Design Engineer.** The District has designated **Carollo Engineers** to act as Design Engineer. The Design Engineer is included within and covered by Contractor's release and indemnity obligations to the District.

**6.3 Construction Manager.** The District has designated **Kevin Rahman,** to act as Construction Manager. The District may assign, upon mutual agreement, all or part of the District's Representative's duties, rights and responsibilities to the Construction Manager. The Construction Manager is the beneficiary of all Contractor obligations to the District, including without limitation, all releases and indemnities.

**ARTICLE 7 – CONTRACTOR'S REPRESENTATIONS**

**7.1 Representations and Warranties**. In order to induce the District to enter into this Agreement, Contractor makes the following representations and warranties:

A. Contractor has visited the Site and has examined thoroughly and understood the nature and extent of the Contract Documents, Work, Site, locality, actual conditions, and all local conditions, and federal, state and local laws and regulations that in any manner may affect cost, progress, performance or furnishing of Work or which relate to any aspect of the means, methods, techniques, sequences or procedures of construction to be employed by Contractor and safety precautions and programs incident thereto.

B. Contractor has examined thoroughly and understood all reports of exploration and tests of subsurface conditions, record drawings, drawings, products specifications or reports, available for bidding purposes, of physical conditions, including Underground Facilities, which are identified in Section 00300, Supplemental Project Information Available to Bidders**,** or which may appear in the Contract Documents. Contractor further acknowledges and agrees that, in executing the Agreement, it is relying on its own observation of (1) the site of the Work, (2) access to the Site, (3) all other data and matters requisite to the fulfillment of the Work and on its own knowledge of existing facilities on and in the vicinity of the site of the Work to be constructed under the Contract, (4) the conditions to be encountered, (5) the character, quality and scope of the proposed Work, (6) the quality and quantity of the materials to be furnished, and (7) the requirements of the Contract, the plans, the specifications, and other related information made available to Contractor by the District.

C. Contractor has correlated its knowledge and the results of all such observations, examinations, investigations, explorations, tests, reports and studies with the terms and conditions of the Contract Documents.

D. Contractor has given the District prompt written notice of all conflicts, errors, ambiguities, or discrepancies that it has discovered in or among the Contract Documents and record drawings and actual conditions and the written resolution thereof (if any) through Addenda issued by the District is acceptable to Contractor.

E. Contractor is duly organized, existing and in good standing under applicable state law, and is duly qualified to conduct business in the State of California.

F. Contractor has duly authorized the execution, delivery and performance of this Agreement, the other Contract Documents and the Work to be performed herein. The Contract Documents do not violate or create a default under any instrument, agreement, order or decree binding on Contractor.

| Contractor has listed the following Subcontractors consistent with the Subcontractor Listing Law, California Public Contract Code §4100 *et seq.*: **Name of Subcontractor and Address of Mill or Shop** | **Description of Subcontractor's Work** | **Subcontractor's License No.** |
|---|---|---|
| | | |
| | | |
| | | |
| | | |
| | | |
| | | |

**ARTICLE 8 – LABOR CODE COMPLIANCE AND DAVIS-BACON WAGES**

**8.1** **California Labor Code**. Pursuant to the provisions of §1770 et seq. of the California Labor Code, which are hereby incorporated by reference and made a part hereof, the Director of the Department of Industrial Relations has determined the general prevailing rate of the per diem wages and the general prevailing rate for holiday and overtime Work in the locality in which the Work is to be performed, for each craft, classification or type of worker needed to perform the Work. Per diem wages shall be deemed to include employer payments for health and welfare, pension, vacation, apprenticeship or other training programs, and similar purposes. Copies of the rates are on file at District office, or may be downloaded from the State Department of Industrial Relations website, Division of Labor Statistics and Research, http://www.dir.ca.gov/dlsr/. The rate of prevailing wage for any craft, classification or type of workmanship to be employed in performing the Work is the rate established by the applicable collective bargaining contract which rate so provided is hereby adopted by reference and shall be effective for the life of this Agreement or until the Director of the Department of Industrial Relations determines that another rate is adopted.

It shall be mandatory for the Contractor and all subcontractors to pay not less than such specified prevailing wage rates to all workers employed in the performance of the Work. If any worker engaged in the performance of the Work is paid less than the specified prevailing wage rate, the Contractor shall pay to each such worker the difference between the specified prevailing wage rate and the actual amount paid to such worker for each calendar day or portion thereof. In addition, Contractor shall comply with the provisions of California Labor Code §1775, including provisions which require Contractor to (a) forfeit as penalty to District not more than $200 for each calendar day or portion thereof for each worker (whether employed by Contractor or any Subcontractor) paid less than the applicable prevailing wage rates for any work done under this Contract in violation of the provisions of the California Labor Code, and (b) pay to each worker the difference between the prevailing wage rate and the amount paid to each worker for each calendar day or portion thereof for which the worker was paid less than the prevailing wage.

The Contractor and each Subcontractor shall keep or cause to be kept an accurate record showing the names, addresses, social security numbers, work classifications, straight time and overtime hours worked each day and week for all laborers, workers and mechanics employed in connection with the performance under the Contract Documents or any subcontract thereunder, and showing the actual per diem wage paid to each of such workers, which records shall be open at all reasonable hours to inspection by District and its agents and to the representatives of the Division of Labor Law Enforcement of the State Department of Industrial Relations. Contractor assumes all responsibility for such payments and shall defend, indemnify and hold the District harmless from any and all claims made by the State of California, the Department of Industrial Relations, any Subcontractor, any worker or any other third party with regard thereto. Contractor shall be responsible to ensure compliance with section 1776. Failure to comply with that section may result in the California Labor Commissioner's assessment of a penalty of $100 per day per affected worker.

The Contractor shall post, at each jobsite, a copy of such prevailing rate of per diem wages as determined by the Director for the California Department of Industrial Relations.

The successful Bidder and its subcontractors shall employ the appropriate number of apprentices, in each apprenticeable craft, on the project site as stipulated in California Labor Code sections 1777.5, 1777.6 and 1777.7. Failure to comply may result in the California Labor Commissioner's assessment of a penalty of $100 for each day of noncompliance.

Pursuant to California Labor Code Section 1771.1, by execution below, the Bidder and its Subcontractors certify that when the Bidder's bid was submitted, the Bidder and its Subcontractors were registered and qualified to perform public work pursuant to Section 1725.5 of the California Labor Code, subject to limited legal exceptions. Pursuant to California Labor Code Section 1771.1, by execution below, the Bidder and its Subcontractors certify that they are registered and qualified to perform public work pursuant to Section 1725.5 of the California Labor Code, subject to limited legal exceptions.

**8.2** **Davis-Bacon Wages**.- Not Used.

**ARTICLE 9 – MISCELLANEOUS PROVISIONS**

**9.1** **Assignment**. Contractor shall not assign this Contract or any rights under or interests in the Contract without the District's written approval. No assignment will release or discharge the Contractor from any duty or responsibility under the Contract Documents.

**9.2** **Successors and Assigns; No Third Party Beneficiaries**. The provisions of this Agreement and the Contract Documents shall inure to the benefit of and shall apply to and bind the successors and permitted assigns of the Parties. Nothing contained in this Agreement or the Contract Documents is intended to or shall be deemed to confer upon any person, other than the Parties and their respective successors and permitted assigns, any rights or remedies hereunder.

**9.3** **Contractor Bankrupt.** If Contractor should commence any proceeding under federal bankruptcy law, or if Contractor be adjudged a bankrupt, or if Contractor should make any assignment for the benefit of creditors, or if a receiver should be appointed on account of Contractor's insolvency, then the District may, without prejudice to any other right or remedy, terminate the Agreement and complete the Work by giving notice to Contractor and its surety according to the General Conditions.

The District shall have the right to complete, or cause completion of the Work, all as specified in the General Conditions.

**9.4** **Unfair Competition.** The following provision is included in this Agreement pursuant to California Public Contract Code §7103.5.

"In entering into a public works contract or a subcontract to supply goods, services, or materials pursuant to a public works contract, the contractor or subcontractor offers and agrees to assigning to the awarding body all rights, title, and interest in and to all causes of action it may have under Section 4 of the Clayton Act (15 U.S.C. Sec. 15) or under the Cartwright Act (Chapter 2 (commencing with §16700) of Part 2 of Division 7 of the Business and Professions Code), arising from purchases of goods, services, or materials pursuant to the public works contract or the subcontract. This assignment shall be made and become effective at the time the awarding body tenders final payment to the contractor, with further acknowledgment by the parties."

**9.5** **Nondiscrimination and Equal Opportunity.** The Contractor shall not discriminate on the basis of a person's race, religion, color, national origin, age, physical or mental handicap or disability, medical condition, marital status, sex, or sexual orientation, against any employee, applicant for employment, subcontractor, bidder for a subcontract, or participant in, recipient of, or applicant for any services or programs provided by Contractor under this Agreement. Contractor shall comply with all applicable federal, state, and local laws, policies, rules, and requirements related to equal opportunity and nondiscrimination in employment, contracting, and the provision of

any services that are the subject of this Agreement, including but not limited to the satisfaction of any affirmative obligations required of Contractor thereby.

Contractor shall include the provisions of this Subsection in any subcontract.

**9.6 No Waiver of Remedies.** Neither the inspection by the District or its agents, nor any order or certificate for payment of money, nor any payment for, nor acceptance of the whole or any part of the Work by the District, nor any extensions of time, nor any positions taken by District or its agents shall operate as a waiver of any provision of this Agreement or the Contract Documents or of any power herein reserved to District or any right to damages herein provided, nor shall any waiver of any breach of this Agreement or of the Contract Documents be held to be a waiver of any other or subsequent breach. All remedies provided in this Agreement and in the Contract Documents shall be taken and construed as cumulative; that is, in addition to each and every other remedy provided in this Agreement and/or the Contract Documents, and the District shall have any and all equitable and legal remedies, which it would in any case have.

**9.7 Governing Law.** This Agreement and the Contract Documents shall be deemed to have been entered into in the County of Marin, State of California, and governed by California law (excluding choice of law rules). By entering into this Agreement, the Contractor consents and submits to the jurisdiction of Courts of the State of California, over any action of law, suit in equity, and/or other proceeding that may arise out of the Contract Documents.

**9.8 Notices.** Except as otherwise specified herein, all notices to be sent pursuant to this Agreement or the Contract Documents shall be made in writing, and sent to the Parties at their respective addresses specified below or to such other address as a Party may designate by written notice delivered to the other parties in accordance with this Section. All such notices shall be sent by:

A. personal delivery, in which case notice is effective upon delivery;

B. certified or registered mail, return receipt requested, in which case notice shall be deemed delivered on receipt if delivery is confirmed by a return receipt;

C. nationally recognized overnight courier, with charges prepaid or charged to the sender's account, in which case notice is effective on delivery if delivery is confirmed by the delivery service;

D. facsimile transmission, in which case notice shall be deemed delivered upon transmittal, provided that (a) a duplicate copy of the notice is promptly delivered by first-class or certified mail or by overnight delivery, or (b) a transmission report is generated reflecting the accurate transmission thereof. Any notice given by facsimile shall be considered to have been received on the next business day if it is received after 5:00 p.m. recipient's time or on a non-business day.

Any written notice to Contractor shall be sent to:

Company Name _____

Company Address _____

Individual's Name _____

Individual's Email Address _____

Individual's Direct Dial Phone #: _____

Individual's Fax # _____

Any written notice to District shall be sent to:

_____

_____

_____

_____

_____

**9.9** **Execution in Counterparts.** This Agreement may be executed in counterparts each of which shall be deemed an original and all of which taken together shall constitute one and the same instrument.

**IN WITNESS WHEREOF**, the parties hereto have signed the Agreement on the date set forth opposite their names.

**CONTRACTOR**

Under penalty of perjury, I certify that the taxpayer identification number and all other information provided here are correct.

DATE: _____

BY_____

_____
Print Name

_____
Title

_____
DIR Registration #

_____
Federal ID#

_____
California Contractor's License # & Classifications

_____
Contractor's License Expiration Date

Type of Business Entity *(check one)*:

_____ Individual/Sole Proprietor
_____ Partnership
_____ Corporation
_____ Limited Liability Company
_____Other (*please specify:*_____)

If Contractor is an out-of-state corporation, Contractor warrants and represents that it possesses a valid certificate of qualification to transact business in the State of California issued by the California Secretary of State pursuant to Section 2105 of the California Corporations Code.

**Sausalito-Marin City Sanitary District**
a California Public Entity

DATE: _____

BY_____
Jeffrey Kingston, General Manager

****END OF SECTION 00510****

**SECTION 00515**

**CERTIFICATE OF AUTHORIZATION**

(If Contractor is a Corporation)

STATE OF CALIFORNIA

COUNTY OF MARIN

I HEREBY CERTIFY that at a meeting of the Board of Directors of the _____

_____, a corporation existing under the

laws of the State of California, held on_____,20____, the following resolution duly passed and adopted:

“RESOLVED, that _____,

as_____ President of the Corporation, be and is

hereby authorized to execute the Agreement dated_____, 20__, to the Sausalito-Marin City Sanitary District and this Corporation and that his/her execution thereof, attested by the Secretary of the Corporation, and with the Corporate seal fixed, shall be the official act and deed of this Corporation."

I further Certify that said resolution is now in full force and effect.

IN WITNESS WHEREOF, I have hereunto set my hand and affixed the official seal of the Corporation this_____ day of_____, 20__.

(seal)

_____
Secretary

_____
Corporate Officer

Company Address:

_____

_____

_____

END OF SECTION

**SECTION 00520**

**CERTIFICATE OF AUTHORIZATION**

(If Contractor is a Partnership)

STATE OF CALIFORNIA

COUNTY OF MARIN

I HEREBY CERTIFY that at a meeting of the Partners of the _____

_____, a Partnering existing under the

laws of the State of California, held on_____,20____, does hereby certify that

_____,

as_____ of the Partnership, be and is

hereby authorized to execute the Agreement dated_____, 20__, to the Sausalito-Marin City Sanitary District and this Partnership and that his/her execution thereof, attested by_____, shall be the official act and deed of this Partnership."

I further certify that said authorization is now in full force and effect.

_____
Managing Partner

Date: _____

Company Address:

_____

_____

_____

END OF SECTION

**SECTION 00525**

**CERTIFICATE OF AUTHORIZATION**

(If Contractor is a Joint Venture)

STATE OF CALIFORNIA

COUNTY OF MARIN

I HEREBY CERTIFY that at a meeting of the Principals of the _____

_____, a Joint Venture existing under the

laws of the State of California, held on_____,20____, the following resolution duly passed and adopted:

"RESOLVED, that _____,

as_____ of the Joint Venture, be and is

hereby authorized to execute the Agreement dated_____, 20__, to the Sausalito-Marin City Sanitary District ("District") and this Corporation and that his/her execution thereof, attested by the _____, shall be the official act and deed of this Joint Venture."

I further Certify that said resolution is now in full force and effect.

_____
Managing Principal

Date: _____

Joint Venture Address:

_____

_____

_____

END OF SECTION

# SECTION 00530

## CERTIFICATE OF AUTHORIZATION

(If Contractor is a Limited Liability Company (LLC))

STATE OF CALIFORNIA

COUNTY OF MARIN

The undersigned, being (a/the) duly elected, qualified and active (member / manager) of _____, a California limited Liability Company (hereinafter "the Company") does hereby certify that:

1. The Articles of Organization of the Company were duly filed with the Office of the Secretary of State of the State of California on _____, and the Articles of Organization have not been (further) amended.

2. There exists an Operating Agreement of the Company and that the said Operating Agreement has not been amended or repealed and that the said Operating Agreement remains in full force and effect as of this date.

3. Neither the Articles of Organization nor the Operating Agreement (as amended) require any further act to be taken or a meeting to be held by its members other that as follows:

4. All said requirements, whether as contained in the Articles of Organization or in the Operating Agreement or by operation of law as to the transaction of _____, 20___ have been met.

5. The following person or persons has/have been duly authorized by the Company to execute the Agreement dated_____, 20__, to the Sausalito-Marin City Sanitary District ("District") and this Company and that his/her execution of all documents in connection with said transaction and that the signature appearing to the right of their name(s) is his/her genuine signature.

| NAME | OFFICE HELD | SIGNATURE |
|---|---|---|
| _____ | _____ | _____ |
| _____ | _____ | _____ |
| _____ | _____ | _____ |

END OF SECTION

# SECTION 00540
# PERFORMANCE BOND

KNOW ALL PERSONS BY THESE PRESENTS, that

WHEREAS, the SAUSALITO-MARIN CITY SANITARY DISTRICT, (hereinafter referred to as "District") has entered into a Contract with _____, (hereinafter referred to as "Principal" or "Contractor"), for construction of the _____ (the "Project");

WHEREAS, the work to be performed by the Contractor is more particularly set forth in the Contract Documents for the Project dated _____, (hereinafter referred to as "Contract Documents"), the terms and conditions of which are expressly incorporated herein by reference; and

WHEREAS, the Principal is required under the terms of the Contract Documents to furnish a bond of faithful performance of the Contract Documents.

NOW, THEREFORE, we, the undersigned Principal, and _____, as Surety, are held and firmly bound unto the District, in the sum of _____Dollars ($_____) lawful money of the United States, to be paid to the District or its successors and assigns; for which payment, we bind ourselves, our heirs, executors, administrators, successors and assigns, jointly and severally, firmly by these presents.

THE CONDITION OF THIS OBLIGATION IS SUCH, that if the above-bound Principal, or its heirs, executors, administrators, successors, or assigns approved by the District, shall promptly and faithfully perform the covenants, conditions and agreements in the Contract Documents during the original term and any extensions thereof as may be granted by the District, with or without notice to Surety, and during the period of any guarantees or warranties required under the Contract Documents, and shall also promptly and faithfully perform all the covenants, conditions, and agreements of any alteration of the Contract Documents made as therein provided, notice of which alterations to Surety being hereby waived, on Principal's part to be kept and performed at the time and in the manner therein specified, and in all respects according to their true intent and meaning, and shall indemnify, defend, protect, and hold harmless the District as stipulated in the Contract Documents, then this obligation shall become and be null and void; otherwise it shall be and remain in full force and effect.

As a condition precedent to the satisfactory completion of the Contract Documents, unless otherwise provided for in the Contract Documents, the above obligation shall hold good for a period of one (1) year after the acceptance of the work by the District, during which time if Contractor shall fail to make full, complete, and satisfactory repair and replacements, then the obligations of Surety hereunder shall continue so long as any such obligation of Contractor remains. Nothing herein shall limit the District's rights or the Contractor or Surety's obligations under the Contract Documents, law or equity, including, but not limited to, California Code of Civil Procedure Section 337.15.

**1.** Principal and Surety, jointly and severally, bind themselves, their heirs, executors, administrators, successors and assigns to the District and the State of California for the complete and proper performance of the Construction Contract, which is incorporated herein by reference.

**2.** If Principal completely and properly performs all of its obligations under the Construction Contract, Surety and Principal shall have no obligation under this Bond.

**3.** If there is no District Default, Surety's obligation under this Bond shall arise after:

**3.1** The District provides Surety with written notice that the District has declared a Principal Default under the Construction Contract pursuant to the terms of the Construction Contract; and

**3.2** The District has agreed to pay the Balance of the Contract Sum:

**3.2.1** To Surety in accordance with the terms of this Bond and the Construction Contract; or

**3.2.2** To a Principal selected to perform the Construction Contract in accordance with the terms of this Bond and the Construction Contract.

**4.** When the District has satisfied the conditions of Paragraph 3 above, Surety shall promptly (within 40 Days) and at Surety's expense elect to take one of the following actions:

**4.1** Arrange for Principal, with consent of the District, to perform and complete the Construction Contract (but the District may withhold consent, in which case the Surety must elect an option described in Paragraphs 4.2, 4.3 or 4.4 below); or

**4.2** Undertake to perform and complete the Construction Contract itself, through its agents or through independent contractors or Construction entities; provided, that Surety may not select Principal as its agent or independent contractor or Contractor without the District's consent; or

**4.3** Undertake to perform and complete the Construction Contract by obtaining bids from qualified contractors or Construction entities acceptable to the District for a contract for performance and completion of the Construction Contract and, upon determination by the District of the lowest responsive and responsible Bidder, arrange for a contract to be prepared for execution by the District and the contractor or Principal selected with the District's concurrence, to be secured with performance and payment bonds executed by a qualified surety equivalent to the bonds issued on the Construction Contract; and, if Surety's obligations defined in Paragraph 6 below, exceed the Balance of the Contract Sum, then Surety shall pay to the District the amount of such excess; or

**4.4** Waive its right to perform and complete, arrange for completion, or obtain a new contractor or Principal, and with reasonable promptness under the circumstances and, after investigation and consultation with the District, determine in good faith its monetary obligation to the District under Paragraph 6 below, for the performance and completion of the Construction Contract and, as soon as practicable after the amount is determined, tender payment therefor to the District

with full explanation of the payment's calculation. If the District accepts Surety's tender under this Paragraph 4.4, the District may still hold Surety liable for future damages then unknown or unliquidated resulting from the Principal Default, as agreed by the District and Surety at the time of tender. If the District disputes the amount of Surety's tender under this Paragraph 4.4, the District may exercise all remedies available to it at law to enforce Surety's liability under Paragraphs 6 and 7 below.

**5.** At all times the District shall be entitled to enforce any remedy available to the District at law or under the Construction Contract including, without limitation, and by way of example only, rights to perform work, protect Work, mitigate damages, advance critical Work to mitigate schedule delay, and coordinate Work with other consultants or contractors.

**6.** If Surety elects to act under Paragraphs 4.1, 4.2 or 4.3 above, within the time period provided in Paragraph 4, above, and complies with its obligations under this Bond, Surety's obligations under this Bond are commensurate with Principal's Construction Contract obligations. Surety's obligations include, but are not limited to:

**6.1** Principal's obligations to complete the Construction Contract and correct Defective Work;

**6.2** Principal's obligations to pay liquidated damages; and

**6.3** To the extent otherwise required of Principal under the Construction Contract, Principal's obligations to pay additional legal, design professional, and other costs not included within liquidated damages resulting from Principal Default (but excluding attorney's fees incurred to enforce this Bond).

**7.** If Surety does not elect to act under Paragraphs 4.1, 4.2, 4.3, or 4.4, above, within the time period provided in Paragraph 4, above, or comply with its obligations under this Bond, then Surety shall be deemed to be in default on this Bond ten Days after receipt of an additional written notice from the District to Surety demanding that Surety perform its obligations under this Bond. Such Surety default shall be independent of the Principal Default. To the extent Surety's independent default causes the District to suffer damages including, but not limited to, delay damages, which are different from, or in addition to (but not duplicative of) damages which the District is entitled to receive under the Construction Contract, Surety shall also be liable for such damages. In the event any Surety obligation following its independent default is inconsistent or conflicts with California Civil Code Section 2809, or any other law which either prohibits, restricts, limits or modifies in any way any obligation of a surety which is larger in amount or in any other respect more burdensome than that of the principal, Surety hereby waives the provisions of such laws to that extent.

**8.** If Surety elects to act under Paragraphs 4.1, 4.3 or 4.4 above, within the time period provided in Paragraph 4, above, and complies with all obligations under this Bond, Surety's monetary obligation under this Bond is limited to the Penal Sum.

**9.** No right of action shall accrue on this Bond to any person or entity other than the District or its successors or assigns.

**10.** Surety hereby waives notice of any change, alteration or addition to the Construction Contract or to related subcontracts, design agreements, purchase orders and other obligations, including changes of time, and of any the District action in accordance with Paragraph 5 above. Surety consents to all terms of the Construction Contract, including provisions on changes to the Contract. No extension of time, change, alteration, Modification, deletion, or addition to the Contract Documents, or of the Work (including services) required thereunder, or any District action in accordance with Paragraph 5 above shall release or exonerate Surety on this Bond or in any way affect the obligations of Surety on this Bond, unless such action is a District Default.

**11.** Any proceeding, legal or equitable, under this Bond shall be instituted in any court of competent jurisdiction where a proceeding is pending between the District and Principal regarding the Construction Contract, or in the Superior Court of the County of Marin, California, or in a court of competent jurisdiction in the location in which the Work is located. Communications from the District to Surety under Paragraph 3.1 above shall be deemed to include the necessary agreements under Paragraph 3.2 above unless expressly stated otherwise.

**12.** All notices to Surety or Principal shall be mailed or delivered (at the address set forth on the signature page of this Bond), and all notices to the District shall be mailed or delivered as provided in Document 005200 (Agreement). Actual receipt of notice by Surety, the District or Principal, however accomplished, shall be sufficient compliance as of the date received at the foregoing addresses.

**13.** Any provision in this Bond conflicting with any statutory or regulatory requirement shall be deemed deleted herefrom and provisions conforming to such statutory requirement shall be deemed incorporated herein.

**14. Definitions**

**14.1 Balance of the Contract Sum:** The total amount payable by the District to Principal pursuant to the terms of the Construction Contract after all proper adjustments have been made under the Construction Contract, for example, deductions for progress payments made, and increases/decreases for approved Modifications to the Construction Contract**.**

**14.2 Construction Contract:** The agreement between the District and Principal identified on the signature page of this Bond, including all Contract Documents and changes thereto.

**14.3 Principal Default:** Material failure of Principal, which has neither been remedied nor waived, to perform or otherwise to comply with the terms of the Construction Contract, limited to “default” or any other condition allowing a termination for cause as provided in Document 00 7200 (General Conditions).

**14.4 District Default:** Material failure of the District, which has neither been remedied nor waived, to pay Principal progress payments due under the Construction Contract or to perform other material terms of the Construction Contract, if such failure is the cause of the asserted Principal Default and is sufficient to justify Principal termination of the Construction Contract.

IN WITNESS WHEREOF, the above-bound parties have executed this instrument under their seals this _____ day of _____, 20____, the name and corporate seal of each corporate party being hereto affixed and these presents duly executed by its undersigned representative, pursuant to authority of its governing body.

(Corporate Seal)

_____
Contractor/ Principal

By_____

Title_____

(Corporate Seal)

_____
Surety

By _____
Attorney-in-Fact

(Attach Attorney-in-Fact Certificate)

Title_____

The rate of premium on this bond is _____ per thousand. The total amount of premium charges is $_____.
(The above must be filled in by corporate attorney.)

THIS IS A REQUIRED FORM

Any claims under this bond may be addressed to:

(Name and Address of Surety) _____
_____
_____

(Name and Address of Agent or Representative for service of process in California, if different from above) _____
_____
_____

(Telephone number of Surety and Agent or Representative for service of process in California) _____

# Notary Acknowledgment

A notary public or other officer completing this certificate verifies only the identity of the individual who signed the document to which this certificate is attached, and not the truthfulness, accuracy, or validity of that document.

STATE OF CALIFORNIA
COUNTY OF _____

On _____, 20___, before me, _____, Notary Public, personally

appeared _____, who proved to me on the basis of satisfactory

evidence to be the person(s) whose name(s) is/are subscribed to the within instrument and acknowledged to me that he/she/they executed the same in his/her/their authorized capacity(ies), and that by his/her/their signature(s) on the instrument the person(s), or the entity upon behalf of which the person(s) acted, executed the instrument.

I certify under PENALTY OF PERJURY under the laws of the State of California that the foregoing paragraph is true and correct.

WITNESS my hand and official seal.

_____
Signature of Notary Public

**OPTIONAL**

*Though the information below is not required by law, it may prove valuable to persons relying on the document and could prevent fraudulent removal and reattachment of this form to another document.*

**CAPACITY CLAIMED BY SIGNER**

☐ Individual
☐ Corporate Officer

_____
Title(s)

☐ Partner(s) ☐ Limited ☐ General
☐ Attorney-In-Fact
☐ Trustee(s)
☐ Guardian/Conservator
☐ Other:

Signer is representing:
Name Of Person(s) Or Entity(ies)

_____

_____

**DESCRIPTION OF ATTACHED DOCUMENT**

_____
Title or Type of Document

_____
Number of Pages

_____
Date of Document

_____
Signer(s) Other Than Named Above

NOTE: This acknowledgment is to be completed for Contractor/Principal.

# Notary Acknowledgment

A notary public or other officer completing this certificate verifies only the identity of the individual who signed the document to which this certificate is attached, and not the truthfulness, accuracy, or validity of that document.

STATE OF CALIFORNIA
COUNTY OF _____

On _____, 20___, before me, _____, Notary Public, personally

appeared _____, who proved to me on the basis of satisfactory

evidence to be the person(s) whose name(s) is/are subscribed to the within instrument and acknowledged to me that he/she/they executed the same in his/her/their authorized capacity(ies), and that by his/her/their signature(s) on the instrument the person(s), or the entity upon behalf of which the person(s) acted, executed the instrument.

I certify under PENALTY OF PERJURY under the laws of the State of California that the foregoing paragraph is true and correct.

WITNESS my hand and official seal.

_____
Signature of Notary Public

**OPTIONAL**

*Though the information below is not required by law, it may prove valuable to persons relying on the document and could prevent fraudulent removal and reattachment of this form to another document.*

**CAPACITY CLAIMED BY SIGNER**

☐ Individual
☐ Corporate Officer

_____
Title(s)

☐ Partner(s) ☐ Limited ☐ General
☐ Attorney-In-Fact
☐ Trustee(s)
☐ Guardian/Conservator
☐ Other:

Signer is representing:
Name Of Person(s) Or Entity(ies)

_____
_____

**DESCRIPTION OF ATTACHED DOCUMENT**

_____
Title or Type of Document

_____
Number of Pages

_____
Date of Document

_____
Signer(s) Other Than Named Above

NOTE: This acknowledgment is to be completed for the Attorney-in-Fact. The Power-of Attorney to local representatives of the bonding company must also be attached.

_____

END OF SECTION

# SECTION 00550
# PAYMENT BOND

KNOW ALL PERSONS BY THESE PRESENTS, that

WHEREAS, the SAUSALITO-MARIN CITY SANITARY DISTRICT, (hereinafter referred to as "District") and _____, (hereinafter referred to as "Principal") have entered into a Contract for the _____ (the "Project"); and

WHEREAS, the work to be performed by the Contractor is more particularly set forth in the Contract Documents for the Project dated _____, (hereinafter referred to as "Contract Documents"), the terms and conditions of which are expressly incorporated herein by reference; and

WHEREAS, said Principal is required to furnish a bond in connection with said contract; providing that if said Principal or any of its Subcontractors shall fail to pay for any materials, provisions, provender, equipment, or other supplies used in, upon, for or about the performance of the work contracted to be done, or for any work or labor done thereon of any kind, or for amounts due under the Unemployment Insurance Code or for any amounts required to be deducted, withheld, and paid over to the Employment Development Department from the wages of employees of said Principal and its Subcontractors with respect to such work or labor the Surety on this bond will pay for the same to the extent hereinafter set forth.

NOW THEREFORE, we, the Principal and _____ as Surety, are held and firmly bound unto the District in the penal sum of _____ Dollars ($_____) lawful money of the United States of America, for the payment of which sum well and truly to be made, we bind ourselves, our heirs, executors, administrators, successors and assigns, jointly and severally, firmly by these presents.

THE CONDITION OF THIS OBLIGATION IS SUCH that if said Principal, his or its subcontractors, heirs, executors, administrators, successors or assigns, shall fail to pay any of the persons named in Civil Code Section 9100, fail to pay for any materials, provisions or other supplies, used in, upon, for or about the performance of the work contracted to be done, or for any work or labor thereon of any kind, or amounts due under the Unemployment Insurance Code with respect to work or labor performed under the contract, or for any amounts required to be deducted, withheld, and paid over to the Employment Development Department or Franchise Tax Board from the wages of employees of the contractor and his subcontractors pursuant to Revenue and Taxation Code Section 18663, with respect to such work and labor the Surety or Sureties will pay for the same, in an amount not exceeding the sum herein above specified, and also, in case suit is brought upon this bond, all litigation expenses incurred by the District in such suit, including reasonable attorneys' fees, court costs, expert witness fees and investigation expenses.

This bond shall inure to the benefit of any of the persons named in Civil Code Section 9100 so as to give a right of action to such persons or their assigns in any suit brought upon this bond.

It is further stipulated and agreed that the Surety on this bond shall not be exonerated or released from the obligation of this bond by any change, extension of time for performance, addition, alteration or modification in, to, or of any contract, plans, specifications, or agreement pertaining

or relating to any scheme or work of improvement herein above described, or pertaining or relating to the furnishing of labor, materials, or equipment therefore, nor by any change or modification of any terms of payment or extension of the time for any payment pertaining or relating to any scheme or work of improvement herein above described, nor by any rescission or attempted rescission or attempted rescission of the contract, agreement or bond, nor by any conditions precedent or subsequent in the bond attempting to limit the right of recovery of claimants otherwise entitled to recover under any such contract or agreement or under the bond, nor by any fraud practiced by any person other than the claimant seeking to recover on the bond and that this bond be construed most strongly against the Surety and in favor of all persons for whose benefit such bond is given, and under no circumstances shall Surety be released from liability to those for whose benefit such bond has been given, by reason of any breach of contract between the owner or the District and original contractor or on the part of any obligee named in such bond, but the sole conditions of recovery shall be that claimant is a person described in Civil Code Section 9100, and has not been paid the full amount of his claim.

The Surety, for value received, hereby stipulates and agrees that no change, extension of time, alteration or addition to the terms of the Contract to be performed thereunder, shall in any way affect its obligations on this bond, and it does hereby waive notice of any such change, extension of time, alteration or addition to the terms of Contract, including but not limited to, the provisions of Sections 2819 and 2845 of the California Civil Code.

IN WITNESS WHEREOF, we have hereunto set our hands and seals this _____ day of _____, 20__.

(Corporate Seal)

_____
Contractor/ Principal

By_____

Title_____

(Corporate Seal)

_____
Surety

By _____
Attorney-in-Fact

(Attach Attorney-in-Fact Certificate)

Title_____

# Notary Acknowledgment

A notary public or other officer completing this certificate verifies only the identity of the individual who signed the document to which this certificate is attached, and not the truthfulness, accuracy, or validity of that document.

STATE OF CALIFORNIA
COUNTY OF _____

On _____, 20___, before me, _____, Notary Public, personally

appeared _____, who proved to me on the basis of satisfactory

evidence to be the person(s) whose name(s) is/are subscribed to the within instrument and acknowledged to me that he/she/they executed the same in his/her/their authorized capacity(ies), and that by his/her/their signature(s) on the instrument the person(s), or the entity upon behalf of which the person(s) acted, executed the instrument.

I certify under PENALTY OF PERJURY under the laws of the State of California that the foregoing paragraph is true and correct.

WITNESS my hand and official seal.

_____
Signature of Notary Public

**OPTIONAL**

*Though the information below is not required by law, it may prove valuable to persons relying on the document and could prevent fraudulent removal and reattachment of this form to another document.*

**CAPACITY CLAIMED BY SIGNER**

☐ Individual
☐ Corporate Officer

_____
Title(s)

☐ Partner(s) ☐ Limited ☐ General
☐ Attorney-In-Fact
☐ Trustee(s)
☐ Guardian/Conservator
☐ Other:

Signer is representing:
Name Of Person(s) Or Entity(ies)

_____

_____

**DESCRIPTION OF ATTACHED DOCUMENT**

_____
Title or Type of Document

_____
Number of Pages

_____
Date of Document

_____
Signer(s) Other Than Named Above

NOTE: This acknowledgment is to be completed for Contractor/Principal.

# Notary Acknowledgment

A notary public or other officer completing this certificate verifies only the identity of the individual who signed the document to which this certificate is attached, and not the truthfulness, accuracy, or validity of that document.

STATE OF CALIFORNIA
COUNTY OF _____

On _____, 20___, before me, _____, Notary Public, personally

appeared _____, who proved to me on the basis of satisfactory

evidence to be the person(s) whose name(s) is/are subscribed to the within instrument and acknowledged to me that he/she/they executed the same in his/her/their authorized capacity(ies), and that by his/her/their signature(s) on the instrument the person(s), or the entity upon behalf of which the person(s) acted, executed the instrument.

I certify under PENALTY OF PERJURY under the laws of the State of California that the foregoing paragraph is true and correct.

WITNESS my hand and official seal.

_____
Signature of Notary Public

**OPTIONAL**

*Though the information below is not required by law, it may prove valuable to persons relying on the document and could prevent fraudulent removal and reattachment of this form to another document.*

**CAPACITY CLAIMED BY SIGNER**

☐ Individual
☐ Corporate Officer

_____
Title(s)

☐ Partner(s) ☐ Limited ☐ General
☐ Attorney-In-Fact
☐ Trustee(s)
☐ Guardian/Conservator
☐ Other:

Signer is representing:
Name Of Person(s) Or Entity(ies)

_____
_____

**DESCRIPTION OF ATTACHED DOCUMENT**

_____
Title or Type of Document

_____
Number of Pages

_____
Date of Document

_____
Signer(s) Other Than Named Above

NOTE: This acknowledgment is to be completed for the Attorney-in-Fact. The Power-of-Attorney to local representatives of the bonding company must also be attached.

END OF SECTION

# SECTION 00560

## CONTRACTORS CERTIFICATION REGARDING WORKER'S COMPENSATION

Contract with the Sausalito-Marin City Sanitary District for the construction of:

PROJECT TITLE:

PROJECT NO.:

Labor Code §3700:

> "Every employer, except the State, and all political subdivisions or institutions thereof, shall secure the payment of compensation in one or more of the following ways:
>
> (a) By being insured against liability to pay compensation by one or more insurers, duly authorized to write compensation insurance in this State.
>
> (b) By securing from the Director of Industrial Relations a certificate on consent to self-insure, which may be given upon furnishing proof satisfactory to the Director of Industrial Relations of ability to self-insure and to pay any compensation that may become due to employees."

I am aware of the provisions of §3700 of the Labor Code that require every employer to be insured against liability for Worker's Compensation or to undertake self-insurance. In accordance with the provisions of that code, I will comply with such provisions before commencing the performance of the Work of this Contract.

Contractor: _____

By: _____

Title: _____

Dated: _____

(Labor Code §1861 requires that this Contractor certification must be signed and filed by the Contractor with the public agency prior to performing any Work.)

END OF SECTION

**SECTION 00600**

**NOTICE TO PROCEED**

Date: _____

To: _____
(Name of Contractor)

Address: _____

_____

Project Name: _____

You are notified that the Contract Times under the above contract will commence to run three (3) consecutive calendar days after the above date of this Notice to Proceed. On that date, you are to start performing your obligations under the Contract Documents.

Before you may start any Work at the Site, you must:

1. Submit certified Safety Program as required by California Code of Regulations, Title 8, General Industry Safety Orders and other related regulatory requirements.

2. Submit copies of applicable permits (Example: Cal DOSH Annual Trench Excavation Permit) Submit approved fire protection plan, if applicable.

3. Submit approved Excavation and Shoring Plan.

4. Attend preconstruction conference.

Sausalito-Marin City Sanitary District

By: _____

Its: _____

Copy to: Construction Manager
Design Engineer

END OF SECTION

**SECTION 00610**

**SAMPLE ESCROW AGREEMENT**
**FOR**
**SECURITY DEPOSITS IN LIEU OF RETENTION**

**This Escrow Agreement is made and entered into by and between:** Sausalito-Marin City Sanitary District whose address is 1 East Road, Sausalito, California 94965, hereinafter called **"District"**, and _____ whose address is _____ hereinafter called **"Contractor"**, and _____ whose address is _____ hereinafter called **"Escrow Agent"**.

**For the consideration hereinafter set forth, District, Contractor, and Escrow Agent agree as follows:**

1. Pursuant to Section 22300 of the Public Contract Code of the State of California, Contractor has the option to deposit securities with Escrow Agent as a substitute for retention earnings required to be withheld by District pursuant to the Construction contract entered into between the District and Contractor for the Project, in the amount of $_____ dated _____ (hereinafter referred to as the "Contract"). Alternatively, on written request of the contractor, the District shall make payment of the retention earnings directly to the Escrow Agent. When the Contractor deposits the securities as a substitute for Contract earnings, the Escrow Agent shall notify the District within ten (10) days of the deposit. The market value of the securities at the time of the substitution shall be at least equal to the cash amount then required to be withheld as retention under the terms of the Contract between the District and Contractor. Securities shall be held in the name of _____ and shall be designated the Contractor as the beneficial owner.
2. District shall make progress payments to Contractor for those funds which otherwise would be withheld from progress payments pursuant to the Contract provisions, provided that Escrow Agent holds securities in the form and amount specified above.
3. When the District makes payment of retentions earned directly to the Escrow Agent, the Escrow Agent shall hold them for the benefit of Contractor until the time that the escrow created under this contract is terminated. The Contractor may direct the investment of the payments into securities. All terms and conditions of this Escrow Agreement and the rights and responsibilities of the parties shall be equally applicable and binding when the District pays the Escrow Agent directly.
4. Contractor shall be responsible for paying all fees for the expenses incurred by Escrow Agent in administering the Escrow Account and all expenses of the District. The District, Contractor, and Escrow Agent shall determine these expenses and payment terms.
5. The interest earned on the securities or money market accounts held in escrow and all interest earned on that interest shall be for the sole account of Contractor and shall be subject to withdrawal by Contractor at any time and from time to time without notice to District.
6. Contractor shall have the right to withdraw all or any part of the principal in the Escrow Account only by written notice to Escrow Agent accompanied by written authorization from District to Escrow Agent that District consents to the withdrawal of the amount sought to be withdrawn by Contractor.
7. District shall have a right to draw upon the securities in the event of default by Contractor. Upon seven (7) days written notice to Escrow Agent from District of the default, Escrow Agent shall immediately convert the securities to cash and shall distribute the cash as instructed by District.
8. Upon receipt of written notification from District certifying that the Contract is final and complete, and that Contractor has complied with all requirements and procedures applicable to the Contract, Escrow Agent shall release to Contractor all securities and interest on deposit less escrow fees and charges of the Escrow Account. The escrow shall be closed immediately upon disbursement of all moneys and securities on deposit and payment of all fees and charges.
9. Escrow Agent shall rely on the written notifications from the District and the Contractor pursuant to Sections (5) through (8), inclusive, of this Escrow Agreement, and the District and the Contractor shall hold Escrow Agent harmless from Escrow Agent's release and disbursement of securities and interest as set forth above.

10. The names of the persons who are authorized to give written notice or to receive written notice on behalf of District, Contractor and Escrow Agent in connection with the foregoing, and exemplars of their respective signatures are as follows:

**On behalf of District:**

_____
Signature

_____
Name

_____
Title

_____
Address

**On behalf of Contractor:**

_____
Signature

_____
Name

_____
Title

_____
Address

**On behalf of Escrow Agent:**

_____
Signature

_____
Name

_____
Title

_____
Address

At the time the Escrow Account is opened, District and Contractor shall deliver to Escrow Agent a fully executed counterpart of this Escrow Agreement.

**IN WITNESS WHEREOF,** the parties have executed this Escrow Agreement by their proper officers on _____.

**DISTRICT:**

_____
Signature

_____
Name

_____
Title

_____
Address

**CONTRACTOR:**

_____
Signature

_____
Name

_____
Title

_____
Address

END OF SECTION

**SECTION 00700**

**GENERAL CONDITIONS**

**TABLE OF CONTENTS**

**ARTICLE 1 - GENERAL PROVISIONS ..... 1**
1.01 ABBREVIATIONS ..... 1
1.02 DEFINITION OF WORDS AND TERMS: ..... 1
1.03 CONTRACT DOCUMENTS- REPRESENTATIONS, CORRELATION AND INTENT ..... 10
1.04 INTERPRETATION OF THE CONTRACT DOCUMENTS ..... 11
1.05 ORDER OF PRECEDENCE OF THE CONTRACT DOCUMENTS ..... 12
1.06 ADDITIONAL DETAILED INSTRUCTIONS ..... 12
1.07 RIGHTS AND REMEDIES ..... 13

**ARTICLE 2 - CONTRACT ADMINISTRATION ..... 14**
2.01 ADMINISTRATION OF THE CONTRACT ..... 14
2.02 DISTRICT'S AUTHORIZED REPRESENTATIVE ..... 14
2.03 CONSTRUCTION MANAGER ..... 14
2.04 DESIGN ENGINEER ..... 16

**ARTICLE 3 - DISTRICT ..... 17**
3.01 GENERAL ..... 17
3.02 ATTENTION TO WORK ..... 17
3.03 OBSERVATION AND INSPECTION ..... 17
3.04 DISTRICT'S RIGHT TO USE OR OCCUPY ..... 17
3.05 DISTRICT'S RIGHT TO CARRY OUT THE WORK ..... 17
3.06 DISTRICT'S RIGHT TO PERFORM WORK AND TO AWARD SEPARATE CONTRACTS ..... 18
3.07 DISTRICT ACCESS TO WORK AREAS ..... 18
3.08 DISTRICT-ACQUIRED PERMITS ..... 18
3.09 DISTRICT-ACQUIRED EASEMENTS ..... 18
3.10 NON-RESPONSIBILITY OF THE DISTRICT ..... 19

**ARTICLE 4 - CONTRACTOR ..... 20**
4.01 GENERAL RESPONSIBILITIES ..... 20
4.02 STATUS OF CONTRACTOR, SUBCONTRACTORS AND SUPPLIERS ..... 20
4.03 CONTRACTOR REPRESENTATIVE ..... 21
4.04 WORKPLACE ENVIRONMENT ..... 21
4.05 COMPLIANCE WITH LAWS ..... 22
4.06 COMPLIANCE WITH ENVIRONMENT LAWS ..... 27
4.07 AUDITS AND ACCESS TO RECORDS ..... 28
4.08 USE AND PROTECTION OF DISTRICT'S SITE AND ADJACENT PROPERTY ..... 28
4.09 FEES AND PERMITS ..... 29
4.10 PROVISIONS FOR HANDLING EMERGENCIES ..... 30
4.11 standard AND NONSTANDARD WORKING HOURS ..... 30

**ARTICLE 5 - SUBCONTRACTORS ..... 31**
5.01 SUBLETTING AND SUBCONTRACTING ..... 31
5.02 SUBCONTRACTOR'S CONTRACTUAL OBLIGATIONS ..... 31
5.03 CONTROL OF SUBCONTRACTORS ..... 32

**ARTICLE 6 - CONSTRUCTION BY DISTRICT OR BY SEPARATE CONTRACTORS ..... 33**
6.01 DISTRICT'S RIGHT TO PERFORM CONSTRUCTION AND AWARD SEPARATE CONTRACTS ..... 33
6.02 COOPERATION WITH DISTRICT'S FORCES AND OTHER CONTRACTORS EMPLOYED BY DISTRICT ..... 33
6.03 MUTUAL RESPONSIBILITY ..... 33
6.04 DISTRICT'S RIGHT TO CLEAN UP ..... 33

**ARTICLE 7 - CONTROL OF THE WORK AND MATERIALS ..... 34**
7.01 MEANS, METHODS AND APPLIANCES ..... 34
7.02 CONTRACTOR'S RESPONSIBILITY FOR WORK ..... 34
7.03 SUPPLY OF SUFFICIENT WORKERS ..... 34
7.04 MATERIALS AND WORKMANSHIP ..... 35
7.05 USE OF MATERIALS FOUND ON THE PROJECT SITE ..... 35
7.06 EXISTING UTILITIES ..... 35

**ARTICLE 8 - PROGRESS OF THE WORK AND TIME ..... 38**
8.01 COMMENCEMENT OF THE WORK ..... 38
8.02 CONTRACT TIME ..... 38
8.03 DELAYS ..... 38
8.04 TIME EXTENSIONS ..... 39
8.05 INDIRECT OVERHEAD ..... 40
8.06 LIQUIDATED DAMAGES FOR Failure to meet completion dates ..... 41
8.07 LIQUIDATED DAMAGES FOR PUBLIC HARDSHIP, NEGATIVE IMPACT, AND DAMAGE TO EXISTING UTLITY MAINS ..... 41
8.08 ACCELERATION OF WORK ..... 42
8.09 SUSPENSION OF WORK ..... 43
8.10 DISTRICT'S RIGHT TO TERMINATE CONTRACT ..... 43
8.11 CONTRACTOR'S RIGHT TO TERMINATE ..... 46

**ARTICLE 9 - CHANGES IN THE WORK ..... 47**
9.01 GENERAL ..... 47
9.02 CONTRACT MODIFICATION PROCEDURES AND TIMELINES ..... 48
9.03 COST DETERMINATION ..... 52
9.04 INCREASED OR DECREASED QUANTITIES ..... 54
9.05 COST PRICING DATA AND ACCESS TO RECORDS ..... 56
9.06 TIME EXTENSIONS FOR CHANGE ORDERS ..... 56
9.07 CONTRACTOR'S ACCEPTANCE OF CHANGE ORDERS ..... 56
9.08 CONSTRUCTION COST REDUCTION INCENTIVE (Value Engineering Proposal) ..... 57

**ARTICLE 10 - PAYMENTS ..... 60**
10.01 BASIS OF PAYMENT ..... 60
10.02 PARTIAL PAYMENTS ..... 60
10.03 PARTIAL PAYMENTS- INCLUSION OF MATERIALS ON HAND ..... 61
10.04 RIGHT TO WITHHOLD AMOUNTS ..... 63
10.05 STOP NOTICES ..... 63
10.06 SECURITY SUBSTITUTION FOR RETENTION ..... 63
10.07 WARRANTY OF TITLE ..... 64
10.08 SUBSTANTIAL COMPLETION ..... 65
10.09 FINAL INSPECTION AND PAYMENT ..... 65

**ARTICLE 11 - PROTESTS, DISPUTES AND CLAIMS ..... 67**
11.01 PROTESTS ..... 67
11.02 DISPUTES ..... 67
11.03 NOTICE OF POTENTIAL CLAIM ..... 68
11.04 CONTEMPORANEOUS DOCUMENTATION ..... 68
11.05 CLAIMS ..... 68
11.06 PROCESSING OF CLAIMS ..... 70
11.07 UNSUCCESSFUL NEGOTIATIONS ..... 73

**ARTICLE 12 - PROTECTION OF PERSONS AND PROPERTY ..... 74**
12.01 SAFETY PROVISIONS ..... 74
12.02 PUBLIC ACCESS, SAFETY AND CONVENIENCE ..... 79
12.03 PROTECTION AND RESTORATION OF PROPERTY ..... 80
12.04 PRESERVATION OF CULTURAL RESOURCES ..... 81

**ARTICLE 13 - INSURANCE AND INDEMNIFICATION ..... 83**
13.01 Insurance ..... 83
13.02 General Indemnification Obligations ..... 88
13.03 Hazardous Substance Indemnifications Obligations ..... 90

**ARTICLE 14 - UNDERCOVERING AND CORRECTION WORK ..... 92**
14.01 GENERAL ..... 92
14.02 CORRECTION OF WORK AND CORRECTIVE ACTION PLANS ..... 92
14.03 ACCEPTANCE OF NONCONFORMING WORK ..... 93

**ARTICLE 15 - FINAL COMPLETION AND ACCEPTANCE ..... 94**
15.01 USE BEFORE ACCEPTANCE ..... 94
15.02 CONTRACTOR'S RESPONSIBILITY TO MANAGE INCOMPLETE AND DEFICIENT WORK94
15.03 COMPLETION OF INTERMEDIATE MILESTONES ..... 95
15.04 PRELIMINARY FINAL INSPECTION FOR INTERMEDIATE MILESTONE(S) ..... 95
15.05 FINAL INSPECTION FOR INTERMEDIATE MILESTONE(S) ..... 95
15.06 COMPLETION OF FINAL PROJECT MILESTONE ..... 95
15.07 RECOMMENDATION FOR ACCEPTANCE BY THE DISRICT ENGINEER ..... 96
15.08 ACCEPTANCE OF THE WORK ..... 96
15.09 FINAL PAYMENT ..... 96
15.10 CONTRACTOR'S DUTIES AND RESPONSIBILITIES AFTER ACCEPTANCE ..... 97
15.11 RETENTION PROCEEDS, WITHHOLDING AND DISBURSEMENT ..... 97
15.12 WARRANTY & GUARANTEES ..... 97

**ARTICLE 16 - MISCELLANEOUS PROVISIONS ..... 99**
16.01 CONTRACTOR'S USE OF COMPUTER SOFTWARE ..... 99
16.02 RIGHTS IN LAND AND IMPROVEMENTS ..... 99

***(THIS PAGE LEFT BLANK INTENTIONALLY)***

## ARTICLE 1 - GENERAL PROVISIONS

1.01 ABBREVIATIONS

A. References in the General Conditions are sometimes referred to only by corresponding abbreviation. Not all abbreviations are listed and not all listed abbreviations are used. Unless otherwise specifically defined in the General Conditions, when the following abbreviations are used, the intent and meaning will be interpreted as follows:

1. CM – Construction Manager.
2. DE- Design Engineer.
3. LDs – Liquidated Damages.
4. NTP – Notice to Proceed.
5. QC – Quality Control.
6. RFI – Request for Interpretation.
7. SOV – Schedule of Values.

B. Additional abbreviations related to the Technical Specifications are found in Section 01424, Abbreviations.

1.02 DEFINITION OF WORDS AND TERMS:

A. Where used in the Contract Documents, the following words and terms shall have the meanings indicated. The meanings shall be applicable to the singular, plural, masculine and feminine of the words and terms. For the sake of convenience, the masculine/feminine pronoun may be used to designate who performs the work and for other purposes and, in call case, applies equally to all persons.

B. The Contract Documents include the terms “as allowed,” “as approved,” “as ordered”, “as directed” or terms of like effect or import to authorize an exercise of professional judgment by the District, Construction Manager or Engineer. In addition, the adjectives “reasonable,” “suitable,” “acceptable,” “proper,” “satisfactory,” or adjectives of like effect or import are used to describe an action or determination of the District, Construction Manager or Engineer as to the Work. It is intended that such exercise of professional judgment, action or determination will be solely to evaluate, in general, the Work for compliance with the requirements of and information in the Contract Documents and conformance with the design concept of the completed Project as a functioning whole as shown or indicated in the Contract Documents (unless there is a specific statement indicating otherwise). The use of any such term or adjective is not intended to and shall not be effective to assign to District, Construction Manager or Engineer any duty or authority to supervise or direct the performance of the Work or any duty or authority contrary to the provisions of the Contract Documents.

C. Wherever in the Contract Documents, the following terms, or pronouns in place of them are used, the intent and meaning will be interpreted as follows:

1. **Acceptance, Final Acceptance** - The formal acceptance by the District Board of Directors, or as delegated by the District Board of Directors, of the Completion of the entire Work of the Contract, which to District’s knowledge has been performed in accordance with the requirements of the Contract Documents and all Approved modifications thereof.
2. **Acts of God** - "Acts of God" shall include only the following occurrences or conditions and effects: earthquakes in excess of a magnitude of 3.5 on the Richter Scale and tidal waves
3. **Addendum** - A written change to the Contract Documents issued before the time fixed for the opening of Bids.
4. **Agreement** - The written and signed document known as Section 00510, Agreement. (Sometimes also referred to as Contract Agreement or Contract.).
5. **Allowance** - “Allowance” shall mean an amount of money set aside under the Contract for a special purpose identified and defined in the Contract Documents.
6. **Alternative** - Refer to Approved Equal and Substitution.
7. **Applicable Laws** - All laws, codes, ordinances, rules and regulations of governmental authorities having jurisdiction over the Site and/or the Work.

8. **Application for Payment** - The form acceptable to District's Representative which is to be used by Contractor during the course of the Work in requesting progress or final payments and which is to be accompanied by such supporting documentation as is required by the Contract Documents.
9. **Approved, Directed, Ordered, or Required** - Whenever these words or their derivatives are used, it is the intent, unless otherwise clearly stated, that written approval, acceptance, or direction by the District's Authorized Representative or District's Project Manager is required.
10. **Asbestos** - Any material that contains more than one percent asbestos and is friable or is releasing asbestos fibers into the air above current action levels established by the United States Occupational Safety and Health Administration.
11. **As-Built Documents** - A set of the Contract Documents including Drawings and Specifications updated on a continuous basis to indicate conditions encountered and the final configuration of a Project as it was constructed. May also be referred to as Project Record Documents. As-Built Documents must include all Addenda, Changes, Additional Detailed Instructions or other clarifications to the Contract Documents and dimensional information showing the actual locations of Installed components of the Work.
12. **Award Date** - Date of action taken by the District Board of Directors accepting Contractor's Bid and authorizing its designee to execute the Agreement. (Sometimes also referred to as Award.)
13. **Bid Alternate** – Additive and/or deductive Bid items identified as such on the Bid Form.
14. **Bid** - The offer of a Bidder to perform the Work pursuant to a completed prescribed Bid Form, properly executed and guaranteed, and timely submitted.
15. **Bidder** - Any individual, firm, partnership, corporation, or combination thereof, submitting a Bid for the Work contemplated, acting directly or through a duly authorized representative.
16. **Bid Form** - The approved form upon which District requires a formal Bid be prepared and submitted for the Work.
17. **Bidder's Security** - The cash, cashier's check, certified check, or Bidder's bond accompanying the Bid submitted by the Bidder as a guaranty that the Bidder will enter into a Contract with District for the performance of the Work of the Contract is awarded to the Bidder.
18. **Business Day** - "Business Day" means any day when the office of the of the District is open for business.
19. **Caltrans**- The California Department of Transportation.
20. **Change Order** - A document, which is signed as recommended by the Construction Manager, accepted by the Contractor, and accepted by an authorized representative of the District, which authorizes an addition, deletion, or revision in the Work or an adjustment in the Contract Price or the Contract Time, issued on or after the Effective Date of the Agreement.
21. **District's Authorized Representative** (District's Representative) - The District's Engineer or District appointed Project Manager's authority includes but is not limited to the authority to approve Addenda, Change Orders, Payment Requests, Milestone and Project Completion dates(s).
22. **District General Manager**- District General Manager means the General Manager of the District acting either directly or through properly authorized representatives acting within the scope of their authorized duties.
23. **Claim** - A separate unresolved Dispute by the Contractor for: (A) a Contract Time extension, (B) payment of money or damages arising from Work done by, or on behalf of, the Contractor pursuant to the contract for a public work and payment of which is not otherwise expressly provided for or the claimant is not otherwise entitled to, or (C) an amount the payment of which is disputed by the District.
24. **Completion** - Acceptance of the Work.
25. **Construction Manager (CM)** - A consultant firm or such other individual or entity designated, in writing, by the District to act as its representative at the construction Site and to perform administrative functions relating to this Contract. The Construction Manager may also furnish inspection services as provided by the Contract. All contact by the Contractor with the District shall be through the Construction Manager.
26. **Consultants** - Architects, Engineers, Construction Managers and other professionals engaged to provide the District with professional services for the Project.

27. **Contract** - The written Agreement on the District's form encompassing the performance of the Work and the furnishing of labor, materials, tools, and equipment in the construction of the Work. Synonymous with "Agreement", and "Contract Agreement".
28. **Contract Bonds** - The Performance Bond and the Payment Bond for Public Works.
29. **Contract Documents** - The words "Contract Documents" shall mean any or all of the items listed in Section 00510, Agreement, Article 2, Contract Documents.
30. **Contract Price (also referred to as Contract Amount or Contract Sum)** - The Contract Price is stated in the Agreement and, including authorized adjustments by Change Order, is the total amount payable by District to the Contractor for performance of the Work pursuant to the Contract Documents.
31. **Contract Time(s)** - Unless otherwise provided, the Contract Time is the period of time, including authorized adjustments, identified in the Contract Documents for Completion of the Work or a designated portion of the Work.
32. **Contractor** - The individual, partnership, corporation or limited liability company who enters into the Contract for the performance of the Work. The term "Contractor" means the Contractor or his authorized representative. The term "Contractor" also may include subcontractors, sub-tier subcontractors, consultants, equipment and material suppliers, and their employees. Sometimes also referred to as "Prime Contractor" or "General Contractor")
33. **Contractor's Authorized Representative** – The Contractor's authorized representative(s) who has the authority to represent and act for Contractor.
34. **Contractor's Plant and Equipment** - The equipment, material, supplies and all other items, except labor, brought onto the Site by the Contractor to carry out the Work, but not to be incorporated in the Work.
35. **Controlling Operation**- A Controlling Operation means an item of the Work on the Project's critical path whose duration time directly affects the date that the entire Work can be completed.
36. **Coordination Drawings** - Contractor prepared drawings submitted by Contractor to District to demonstrate the coordination of methods, materials, equipment, plans, or sequence the Contractor proposes to use when limited space is available for installation of different components, coordination is required for installation of Products and materials Fabricated by separate entities, or the relationship of components is shown on separate Shop Drawings or Submittals. Coordination Drawings are not considered Contract Documents.
37. **Corrective Work Item List** - List of incomplete items of work, incomplete administrative requirements and items of work which are not in conformance with the Contract, prepared by the Construction Manager and issued to the Contractor as an attachment to the response to the Contractor's notification of Substantial Completion.
38. **Cost Proposal** - A proposed cost made by the Contractor to the District to add, delete or change the Work based on a District Request for Proposal (RFP).
39. **County** – The County of Marin, a political subdivision of the State of California.
40. **Critical Path** - The path(s) of activities on the current updated version of the Official Progress Schedule without any Total Float Time.; all references in the Contract Documents to the Critical Path mean the longest path of dependent activities within the current updated version of the Official Progress Schedule that determine when the Work of a Milestone or the entire Work of the Project will be complete. A Critical Path Method (CPM) schedule is in the form of precedents, networks, and time sequences.
41. **Critical Supply Shortage** -- An unusual shortage in materials that is (a) supported by documented proof that Contractor made every effort to obtain such materials from all available sources; (b) such shortage is due to the fact that such materials are not physically available from single or multiple sources or could have been obtained only at exorbitant prices entirely inconsistent with current and standard rates taking into account the quantities involved and the usual industry practices in obtaining such quantities; and (c) such shortages and the difficulties in obtaining alternate sources of materials could not have been known or anticipated by Contractor at the time it submitted its bid or entered the Contract. Market fluctuations in prices of materials, whether or not resulting from a Force Majeure Event, does not constitute a Critical Supply Shortage.
42. **Date of Acceptance** - The date that the Notice of Completion is filed by the District.

43. **Day(s)** - The word "Days" shall mean calendar days, including legal holidays, Saturdays and Sundays, unless specifically designated otherwise. The day shall be 24 hours measured from midnight to the next midnight.
44. **Defective** - The word “defective,” when modifying the word “Work,” refers to Work that is unsatisfactory, faulty, or deficient in that it:
    a. does not conform to the Contract Documents, or
    b. does not meet the requirements of any applicable inspection, reference standard, test, or approval referred to in the Contract Documents, or
    c. has been damaged prior to Engineer’s recommendation of final payment (unless responsibility for the protection thereof has been assumed by District at Substantial Completion in accordance with the Contract Documents).
45. **Demobilization** –Demobilization includes: movement off the Project Site, upon completion of the Work, of personnel, equipment, temporary offices, buildings and other facilities, supplies and incidentals; and submission of final Project submittals.
46. **Design Engineer** - The engineer, architect or specialty design consultant designated by the District to have design control over the Work or a specified portion of the Work, acting either directly or through duly authorized representatives. Such representatives shall act within the scope of the particular duties delegated to them. The Design Engineer may also furnish inspection services as provided by the Contract. The Design Engineer may be also be referred to as “Engineer” if the definition is used in a Design Engineer role and capacity.
47. **Direct** - Action of the District or Construction Manager by which the Contractor is ordered to perform or refrain from performing work under the Contract.
48. **Director** - The definition contained in Section 1-1.15, "Director," of the Standard Specifications is hereby deleted and replaced with the following: the District Board of Directors or members thereof.
49. **Dispute** - A written disagreement submitted by the Contractor seeking adjustment of Contract terms, payment of money, extension of Contract Time or other relief with respect to the terms of the Contract. A Dispute is not a Claim.
50. **Drawings** - The graphic and pictorial portions of the Contract Documents, illustrating the design, character, location, and dimensions of the Work to be performed, generally including but not limited to, elevations, sections, details, schedules, General Notes, specific notes, and diagrams. Synonymous with “Contract Drawings” and “Plans”.
51. **Easements** - A recorded document in which the land owner gives the District permanent rights to construct and maintain water mains, sanitary sewers, storm drains and/or facilities across private property.
52. **Emergency** – A sudden, unexpected occurrence that poses a clear and imminent danger, requiring immediate action to prevent or mitigate the loss or impairment of life, health, property, or essential public services.
53. **Engineer** - The Engineer shall mean the District Engineer as well as the District Engineer’s subordinates and other District Representative(s) who have been duly authorized to exercise control and supervision of the Work. The Engineer generally will be either a professional engineer or architect, depending on the nature of the Work, but the Engineer is not required to be a professional engineer or architect.
54. **Equipment (Construction)** - All machinery and equipment, together with the necessary supplies for upkeep and maintenance, including tools and apparatus necessary for the proper construction and acceptable completion of the Work contemplated. (Installation) - All material or articles used in equipping a facility or apparatus required to fulfill a functional design.
55. **Execution** - Field or Site performance, workmanship, installation, erection, application, field fabrication, quality control, and protection of installed products on the Site.
56. **Extra Work** - New or unforeseen work, or added work of a different character or function and for which no basis for payment is prescribed in the Contract Documents; or that involves revisions of the details of the Work in such a manner as to render inequitable payment under items upon which the Contractor bid in its bid; or that work to be done under “stipulated prices” as given in the Bid Schedule of Prices.
57. **Fabricated** - Specifically assembled or made out of selected materials to meet Project specific design requirements.

58. **Field Directive** - A Field Directive (FD) is used for providing written direction to the Contractor to perform work which: a) directs the Contractor to proceed with work that the Construction Manager has not recognized as extra work, b) directs the Contractor to proceed with work that the Construction Manager has determined is extra work but costs have not been determined or are difficult to determine by the Construction Manager. Also referred to as a “Directive”.
59. **Field Order** - A written instruction given to the Contractor authorizing work that is a change to the scope of work carried out on a time and material basis or a lump sum cost agreed to between District and Contractor.
60. **Final Acceptance** - Action taken by the District Board of Directors, or as delegated by the District Board of Directors, accepting the Work as fully completed.
61. **Final Completion** - The date when the Work is 100% complete, including completion and acceptance of all punch list corrections, as certified by the Construction Manager.
62. **Final Inspection List** - List of materials, equipment, workmanship, or administrative requirements which are not in conformance with the Contract. The list shall be prepared by the Construction Manager and submitted to the Contractor following the Contractor’s notice of completion of the Work, including all items on the Punch List.
63. **Force Account** - The method of performing Work by or on behalf of Contractor on a time, materials and equipment basis.
64. **Force Majeure Event**- An event that materially affects a party’s performance and is one or more of the following: (1) Acts of God or other natural disasters occurring at the Site; (2) terrorism or other acts of a public enemy; (3) orders of governmental authorities (including, without limitation, unreasonable and unforeseeable delay in the issuance of permits or approvals by governmental authorities that are required for the Work); (4) pandemics, epidemics or quarantine restrictions; (5) strikes and other organized labor action occurring at the Site and the effects thereof on the Work, only to the extent such strikes and other organized labor action are beyond the control of Contractor and its Subcontractors, of every tier, and to the extent the effects thereof cannot be avoided by use of replacement workers; and (6) a Critical Supply Shortage. For purposes of this section, “orders of governmental authorities,” includes ordinances, emergency proclamations and orders, rules to protect the public health, welfare and safety, and other actions of the District in its capacity as a municipal authority.
65. **Furnish** - The word “furnish” when used in connection with services, materials, or equipment, shall mean to supply and deliver said services, materials, or equipment to the Site (or some other specified location) ready for use or installation and in usable or operable condition.
66. **General Conditions** - Sections 00700, General Conditions, and 00800, Supplementary General Conditions, which form the part of the Contract Documents setting forth legal and contractual instructions to the Contractor and general clauses that establish how the Project is to be administered.
67. **General Requirements** - Division 1, GENERAL REQUIREMENTS, which forms the part of the Contract Documents establishing special conditions or requirements peculiar to the Work and supplementary to the General Conditions.
68. **Governing Body** - The Sausalito-Marin City Sanitary District Board of Directors.
69. **Governmental Agencies** - Whenever, in the Contract Documents, reference is made to any governmental agency or officer, such reference will be deemed made to any agency or officer acting in accordance with law to the power, duties, jurisdiction, and authority of the agency or officer mentioned.
70. **Guarantee** - A promise or assurance given by one party to a second party that a third party's obligations will be fulfilled (i.e., Contractor agrees to guaranty the Work performed by one of its Subcontractors to the District). (Also sometimes referred to as Warranty/Guarantee)
71. **Hazardous Waste** - The term Hazardous Waste shall have the meaning provided in Section 1004 of the Solid Waste Disposal Act (42 USC Section 6903) as amended from time to time, or any other material with Hazardous Waste requirements.
72. **Herein** - Refers to information presented in the Contract Documents.
73. **Hold Harmless** - Agreement by one (1) party to indemnify and defend a second party when the second party is sued by a third party as a result of the first party’s actions or inactions.

74. **Holidays** - Legal holidays shall include the following holidays designated by the District: January 1- New Year's Day, Third Monday in January- Martin Luther King Jr. Day, Third Monday in February- President's Day, Last Monday in May- Memorial Day, July 4- Independence Day, First Monday in September- Labor Day, November 11- Veterans Day, Thanksgiving Day, the day after Thanksgiving and December 24 & 25.
75. **Incomplete Work** - Work required by the Contract Documents that is not yet installed.
76. **Inspector** – Inspector shall mean an engineering or construction inspector acting within the authorized scope of the particular duties and authority delegated to such inspector by the District. Inspector may include the person(s), firm(s), or agency(ies) employed by the District to perform inspection during construction of the Work, under the direction of the Construction Manager. It shall also mean any representative of the District who will perform inspections of the Work for code compliance and quality assurance reporting in addition to those inspections performed by the Engineer. Said inspector may be the Construction Manager or may be another representative of the District.
77. **Install** - The word "install" when used in connection with services, materials, or equipment, shall mean to put into use or place in final position said services, materials, or equipment, complete and ready for intended use. Synonymous with "Provide" for the purposes of this Contract.
78. **Laboratory** - Any laboratory authorized or accepted by District to test materials and Work involved in the Contract.
79. **Laws and Regulations; Laws or Regulations** - Any and all applicable laws, rules, regulations, ordinances, codes, and orders of any and all governmental bodies, agencies, authorities, and courts having jurisdiction.
80. **Liens** - Charges, security interests, or encumbrances upon Project funds, real property or personal property.
81. **Liquidated Damages** - The amount prescribed in the Contract Documents to be paid to District or to be deducted from any payments due or to become due Contractor for each Day's delay in completing the whole or any specified portion of the Work, beyond the time(s) allowed in the Contract Documents plus approved time extensions, or as otherwise used in provisions for liquidated damages for public hardship.
82. **May** - "May," wherever or in whatever manner used, refers to permissive actions.
83. **Named Products** - Products identified in the Contract Documents by Manufacturer's product name. Named Products may include Manufacturer's make or model number or other designation.
84. **Notice Inviting Bids** - The Section inviting sealed Bids for the Work. See Section 00100, Notice Inviting Bids.
85. **Notice of Award** - The document from the District notifying Contractor that the District Board of Directors accepted Contractor's Bid and authorized the District General Manager to execute the Agreement.
86. **Notice of Completion** - A document executed by the District, as authorized by the District Engineer and filed with the County Recorder, signifying that the Contract has been Completed and Accepted.
87. **Notice to Proceed** - The written notice issued by District's Authorized Representative to Contractor whereby the Contractor is notified of the official construction Contract start date and is authorized to proceed with the Work. Unless otherwise specified in the Contract Documents or Directed by written Order of District's Authorized Representative, the Contractor must begin Work within fourteen (14) Days following the start date for the Work as stated in the Notice to Proceed.
88. **Operational Acceptance** - Written notice by the Construction Manager accepting the Work, or portions of the Work, as operationally complete. Used for the purpose of placing equipment or facilities in service before all of the Contract Work is completed, thus affording the District beneficial use of the equipment or facilities
89. **Paragraph** - For reference or citation purposes, a paragraph shall refer to the paragraph, or paragraphs, called out by paragraph number and alphanumeric designator.
90. **Party** - The District or the Contractor individually, and "Parties" shall mean the District and the Contractor collectively.
91. **Perform** - Refer to "Provide."
92. **Person** - The term, person, includes firms, companies, corporations, partnerships, and joint ventures.
93. **Plans** - See Drawings

94. **Prejudiced** - As used herein, the term “Prejudiced” shall include, but is not limited to, material interference with the District's timely consideration of action to prevent increases in the cost or time required to perform the Work, ability to monitor the Contractor’s increased costs resulting from the situation, to timely marshal facts, and to timely plan its affairs.
95. **Products** - Materials, equipment, systems, shop fabrications, mixtures, and source controls.
96. **Progress Schedule** - A schedule, prepared and maintained by Contractor, describing the sequence and duration of the activities comprising the Contractor’s plan to accomplish the Work within the Contract Times.
97. **Project** – The total construction of which the Work to be provided under the Contract Documents, may be the whole, or a part thereof as indicated elsewhere in the Contract.
98. **Product Data** - Illustrations, Manufacturer’s literature, standard schedules, performance charts, instructions, brochures, diagrams and other information submitted by the Contractor to illustrate materials or equipment for some portion of the Work. Product Data are not considered Contract Documents.
99. **Punch List** – “Minor” Work that remains to be completed before the District’s Authorized Representative will issue a Milestone Completion Letter. Punch List work includes minor architectural cosmetic work to correct minor flaws or deficiencies related to painting, trim, ceiling tile, joinery work or other architectural features; minor adjustments to door hardware; minor cleaning to include scuff marks and small stains; correction of minor mechanical or electrical deficiencies such as tightening of plumbing fixtures and connections, affixing electrical cover plates, minor adjustments to HVAC controls and settings; minor corrections to landscaping; etc. Punch List does not include “Major” Work that would prevent District from occupying and using the facility for its intended use.
100. **Quality** - Conformance to the requirements established by the Contract Documents
101. **Quality Control (QC)** - The Contractor's system in place during execution of the Work, to manage and control its own, and its Supplier's and Subcontractor's activities to comply with the requirements of the Contract Documents.
102. **Reference Specifications** - Those standards, rules, method of tests or analysis, codes, and specifications of other agencies, engineering societies, or industrial associations referred to in the contract documents. These refer to the current edition of amendments in effect at the date of Section 00100, Notice Inviting Bids, unless specifically referred to by edition, volume or date.
103. **RFI or Request for Interpretation** - A written request by the Contractor for information or clarification regarding the requirements of the Contract Documents.
    a. RFI’s are not to be used in place of a Substitution.
    b. RFI’s are not to be used in lieu of a Corrective Action Plan, described in Article 14 of this Section.
    c. Requests for Information must be numbered sequentially and presented in a format furnished by, or acceptable to, the District’s Project Manager. The District’s response to an RFI does not change the requirements of the Contract Documents, Contract Time, or Contract Sum.
104. **RFP or Request for Proposal** - A request for a proposed cost made to the Contractor by the District to add, delete or change the Work. RFP’s shall not be deemed to be directions to proceed with any addition, deletion or change to the Work. RFP’s may also be referred to as “Request for Quotation”.
105. **Retention** - A defined percentage of the Contract Sum held by the District pending Completion of the Work, or any portion of the Work.
106. **Salvage** - All items specified to be salvaged shall be carefully removed so as not to damage the item, and neatly stockpiled at the construction Site by the Contractor. The exact location to stockpile items shall be determined by the Construction Manager. The Construction Manager shall then make a determination as to which items are to be retained by the District. All other items shall be properly disposed of at no additional cost to the District.
107. **Samples** - Physical examples that illustrate materials, equipment or workmanship and establish standards by which the Work will be evaluated.
108. **Schedule of Values** – A document submitted by the Contractor to the District reflecting the portions of the Contract Sum allotted for the various parts of the Work. (Sometimes also referred to as “Cost Breakdown.”)

109. **Shall** - Refers to actions entered into by the Contractor or the District as a covenant with the other party to do or to perform the action.
110. **Shop Drawings** - Drawings, diagrams, schedules, and other data specially issued for the Work by the Contractor or a Subcontractor, Sub-Subcontractor, and Suppliers to demonstrate and/or illustrate the way by which the Contractor proposes to conform to the information given and the design concept expressed in the Contract Documents for some specific portion of the Work. Shop Drawings are not considered Contract Documents.
111. **Site** - Lands or areas indicated in the Contract Documents as being furnished by District upon which the Work is to be performed, including rights-of-way and easements for access thereto, and such other lands furnished by District which are designated for the use of Contractor.
112. **Specifications** - The written directions, provisions and requirements pertaining to the materials to be provided and to the method and manner of performing the Work, including any Addenda and Approved revisions by District. (Also sometimes referred to as “Technical Specifications” or “Specs.”)
113. **Standard Drawings, Standard Plans, Standard Specifications** – Unless specifically stated otherwise, the latest edition of the District’s Standard Drawings, Standard Plans or Standard Specifications referenced in the Contract Documents.
114. **State of California Specifications** - The State of California Department of Transportation Standard Specifications in effect at the date of Section 00100, Notice Inviting Bids. Also referred to as State Standard Specifications and Caltrans Standard Specifications. Where the terms the "State" or the "Engineer" are used in the California Standard Specifications, they shall be considered as meaning the "District" or the "Engineer" as defined herein. Paragraphs of the California Standard Specifications on Measurement and Payment shall not apply.
115. **State** - The State of California.
116. **Stop Notice** - A legal remedy for subcontractors and suppliers who contribute to public works, but who are not paid for their work which secures payment from construction funds possessed by the District.
117. **Subcontractor** - A contractor, within the meaning of the provisions of Chapter 9 (commencing with §7000) of Division 3 of the Business and Professions Code, who contracts directly with the Contractor to perform any Work of the Project. The term Subcontractor is referred to throughout the Contract Documents as if singular in number and means a Subcontractor or its authorized representative.
118. **Sub-subcontractor** - A contractor, within the meaning of the provisions of Chapter 9 (commencing with §7000) of Division 3 of the Business and Professions Code, that has a direct or indirect contract with a Subcontractor to perform any Work of the Project. The term Sub-subcontractor is referred to throughout the Contract Documents as if singular in number and means a Sub-subcontractor or an authorized representative thereof.
119. **Submittal** - Data or items required by the Contract Documents to be submitted by the Contractor to the District. Submittals demonstrate the method, materials, plan, or sequence the Contractor proposes to use to conform to the design concept expressed in the requirements of the Contract Documents. Submittals include but are not limited to Shop Drawings, Coordination Drawings, layouts, Progress Schedules, Substitution requests, Samples, mockups, catalogs, Product Data and literature, equipment data sheets, maintenance and operating data. Unless otherwise stated in the Contract Documents, Submittals are not considered Contract Documents.
120. **Substantial Completion** - Sufficient completion of the Project, or the portion thereof, to permit a utilization of the Project. Determination of substantial completion is solely at the discretion of the District. Substantial completion does not mean complete in accordance with the Contract nor shall substantial completion of all or any part of the Project entitle the Contractor to acceptance under the Contract.
121. **Substantial Completion Date** - Date when the District puts into service, the Project or that portion of the Project that has been determined to be substantially complete.
122. **Substitution** - A material and/or process offered by the Contractor in lieu of the specified material and/or process, and accepted by the District’s Authorized Representative in writing as being equivalent (equal) to the specified material and/or process, such as an excepted or equal. (Also sometimes referred to as Product Substitution)

123. **Supplementary General Conditions** - That part of the Contract Documents which amends or supplements the General Conditions.
124. **Supplier** - A person or organization contracting with Contractor, a Subcontractor or a Sub-subcontractor to supply materials and/or equipment for the Work.
125. **Surety** - A company that provides Contractor's bonds for bidding, performance and payment and is admitted as a surety insurer as defined in §995.120(a) of the California Code of Civil Procedure.
126. **Surveyor** - A land surveyor licensed in the State of California.
127. **Total Float Time** - The time difference between the earliest start date and the latest start date, or between the earliest finish date and the latest finish date, of Project activities. (Also sometimes referred to as "slack time" or "Total Float" or "Float").
128. **Trade Names** - Where a certain product is called by its Trade Name, it is intended as a guide for type and quality.
129. **Typical Details** - Details of standard structures, devices or instructions referred to on the Plans and Specifications by title or number and developed by the Engineer.
130. **Unbalance Bid** - A Bid containing a combination of lump sum and unit price Contract Items where individual Contract Items contained in the bid do not reflect reasonable actual direct costs plus a reasonable proportionate share of the Bidder's anticipated indirect costs and profit.
131. **Underground Facilities** - All underground pipelines, conduits, ducts, cables, wires, manholes, vaults, tanks, tunnels, or other such facilities or attachments, and any encasements containing such facilities, including those that convey electricity, gases, steam, liquid petroleum products, telephone or other communications, cable television, water, wastewater, storm water, other liquids or chemicals, or traffic or other control systems.
132. **Unilateral Change Order** – A Change Order issued by the District without the consent of the consent or signature of the Contractor.
133. **Unit Price Work** – Work to be paid for on the basis of unit prices.
134. **Utility** - Public or private fixed works for the transportation of fluids, gasses, power, signals, or communications.
135. **Warranty** - A Contractor's, Subcontractor's, Manufacturer's or material Supplier's promise or assurance, written or otherwise, that it's Products and services provided meet industry (implied) or contractual (the requirements of the Contract Documents) standards of performance. (Also sometimes referred to as Warranty/Guarantee.)
136. **Will** - See definition of "Shall".
137. **Work** - Any and all obligations, duties, and responsibilities necessary to complete the construction assigned to, or undertaken by, the Contractor pursuant to the Contract Documents including all labor necessary to produce such construction and all materials, equipment, and supplies incorporated or to be incorporated in the construction. Also, the completed construction or parts thereof required to be provided under the Contract Documents.
138. **Work Day** - A working day is defined as any day, except Saturdays, Sundays and District Legal Holidays. Any work scheduled by the Contractor on non-working days (Saturdays, Sundays, and District Legal Holidays) shall be verified with the District at least 72 hours in advance. Unless specifically provided for otherwise in the Contract Documents, the District shall be compensated for inspection work, at an hourly rate, for any work on non-working days and for overtime. A "working day" may also be referred to as a "business day".

1.03 CONTRACT DOCUMENTS- REPRESENTATIONS, CORRELATION AND INTENT

A. Upon Notice to Proceed, the Contractor may obtain from the District, free of charge, two (2) copies of the Drawings (half- size), Specifications and Addenda issued during the bid period. The District will also provide one electronic copy of the Contract Documents in PDF format.

B. The Contractor shall keep on the Project Site a complete copy of the Conformed Drawings and Specifications and shall at all times give the Construction Manager and District's staff access thereto.

C. The Contract Documents are complementary; what is called for by one is as binding as if called for by all. The intent of the Contract Documents is to include all labor, materials, equipment, and all other items necessary for the proper execution and completion of the entire Work. Unless otherwise specifically noted, Contractor must provide and pay for all labor, materials, equipment, tools, construction equipment and machinery, water, heat, utilities, transportation, and all other facilities and services necessary for the proper execution and completion of the Work.

D. Work not explicitly depicted or mentioned in any portion of the Contract Documents is nevertheless required if it is consistent therewith and is reasonably inferable therefrom as being necessary to produce the intended results. Words and abbreviations having well known technical, trade or industry meanings are herein in accordance with such recognized meanings.

E. Any Work called for by the Drawings and not mentioned in the Specifications, or vice versa, is to be provided as though fully set forth by both.

F. The intent of the Drawings specifically includes the intent to depict construction that complies with all applicable laws, codes and standards.

G. The Contract Documents prescribe the details for the construction and completion of the Work that Contractor undertakes to perform in accordance with the terms of the Contract.

H. Subject to applicable law, including without limitation to California Public Contract Code sections 4100 et seq., and the terms of the Contract governing subcontracting, the Divisions and Sections of the Specifications and identifications of any Drawings shall not control Contractor in dividing the Work among subcontractors or suppliers or delineating the work to be performed by any specific trade. Paragraphs titled "Section Includes" are not intended to "scope" the Section nor imply a trade responsibility, but serve merely as a listing of significant items in the Section to allow the reader to quickly asses the Section content. Similarly, Paragraphs titled "Related Sections" or "Related Requirements" or "Related Documents" are not intended to coordinate the Contractor's work, but merely indicate where certain other significant items that may be related to the Work of the Section are specified.

I. Reasonably implied parts of the Work shall be performed as "incidental work" even though absent from the Drawings and Specifications. "Incidental" work shall be performed by Contractor without extra cost to District. Incidental work includes any work not shown on Drawings nor described in Specifications, but which is necessary or normally or customarily required as a part of the Work shown on the Drawings or described in the Specifications, or is necessary or required to make each installation satisfactory, legally operable, functional, consistent with the intent of the Drawings and Specifications or the requirements of the Contract Documents. Incidental work shall be treated as if fully described in Specifications and shown on Drawings, and expense thereof shall be included in the Bid Price. Incidental work includes, but is not limited to, tasks required to be performed under Division 1, GENERAL REQUIREMENTS, of the Specifications.

J. By entering into the Agreement, Contractor represents it is familiar with the Project Site conditions including the availability of labor and materials in the local geographic area where the Work is to be performed and has correlated personal observations with requirements of the Contract Documents.

K. While the District has endeavored to accurately represent the physical conditions which may affect the cost of the proposed work shown on the plans or indicated in the Specifications, the District does not warrant the completeness or accuracy of such information. It is the Contractor's responsibility to ascertain the existence of any such conditions affecting the cost of the work which would have been disclosed by reasonable examination to the Site.

L. No test, investigation, statement or estimate of a factual situation not incorporated in the Contract shall be relied on by the Contractor. Any test, investigation, statement or estimate of fact incorporated in the Contract shall be considered by the Contractor to be a suggestion only, and he or she may request equal access to the underlying

or background informative material or source and shall arrive at his or her own opinion thereon, including his or her own determination of how reliable any conclusion appearing in (or inferred from) the Contract.

M. The Contractor may not rely on “drawings of record” or similarly final or accepted drawings or maps of facilities constructed on public or private property for or under inspection by the District. Such information may be used for reference only. Actual locations and depths shall be determined by field investigations by the Contractor.

N. In the event of any difference, discrepancy, inconsistency, error, omission, or other apparent conflict within the Contract Documents and/or with actual field conditions, Contractor must immediately notify District in writing, requesting clarification. If Contractor is aware the Work is affected and proceeds with the Work without instructions from District, Contractor must make good any resultant damage or defects without additional cost to the District.

O. The misplacement, addition, omission of a word or character shall not change the intent of any part of the Contract form that set forth by the Contract as a whole.

P. When standards of the Federal Government, trade societies, trade associations, or similar commercial standards are referred to in the Contract Documents by specific date of issue, these standards, including amendments or supplements, will be considered as part of the Contract Documents. When such references do not bear date of issue, the current published edition, including amendments or supplements, at the date of the first Notice Inviting Bids will be considered as part of the Contract Documents.

Q. Contractor is responsible for the complete and proper execution of the Work as described in, and as reasonably implied by, the Contract Documents. Contractor is solely responsible for ensuring that all Subcontractors, Suppliers, Manufacturers, etc., working with any portion of the Contract Documents are fully aware that all the Contract Documents apply to their Work, although the other portions of the Contract Documents may not be fully reproduced or repeated therein.

R. The Contract Documents issued by District and copies furnished to the Contractor, are for use solely with respect to the Work of this Project. They are not to be used by the Contractor or any Subcontractor, Sub-Subcontractor or Supplier on other projects, nor for additions to this Project outside the scope of the Work without the specific written consent of District. The Contractor, Subcontractors, Sub-Subcontractors and Suppliers are granted permission to use and reproduce applicable portions of the Contract Documents issued by District appropriate to, and for use in, the execution of their Work pursuant to the requirements of the Contract Documents.

S. Unless otherwise indicated, highlighted, emboldened, italicized, or underlined text is not indented to imply special significance but serves merely as an aid to the reader to distinguish or quickly reference selected text.

1.04 INTERPRETATION OF THE CONTRACT DOCUMENTS

A. Notwithstanding any omission from these Specification or the Drawings it shall be the duty of the Contractor to call the Construction Manager's attention to apparent errors or omissions and request instructions in writing before proceeding with the work. The Contractor, as part of the Contract, shall agree not take advantage of any errors or omissions in the Contract Documents. It is also the duty of the Contractor to promptly notify the Construction Manager in writing of any design, materials, or specified method that the Contractor believes may prove defective or insufficient or for which there are procurement challenges affecting the ability of the Contractor to complete the Work within the times required. If the Contractor believes that a defect or insufficiency exists in design, materials or specified method and fails to promptly notify the Construction Manager in writing of this belief, the Contractor thereby waives any right to assert entitlement to and/or recover any damages and/or time extensions arising from any such that a defect or insufficiency in design, materials or specified method at any later date in any legal or equitable proceeding against the District, or in any subsequent arbitration or settlement conference between the District and the Contractor. The Construction Manager may, by appropriate instructions correct errors and supply omitted information, which instructions shall be as binding upon the Contractor as though contained in the original Specifications or Drawings.

B. Any discrepancies found between the Contract Documents and Project Site conditions or any inconsistencies or ambiguities in the Contract Documents shall be immediately reported, in writing, to the Construction Manager. Questions regarding the meaning and intent of the Contract Documents shall be referred in writing by the Contractor to the Construction Manager with a RFI. The Construction Manager shall respond to the Contractor in writing with a decision within fifteen (15) days of receipt of the request, or if it is necessary to extend this

period, the Construction Manager shall notify the Contractor in writing as to when a decision will be provided. RFI procedures are further described in Section 01340, Request for Interpretation.

C. Work done by the Contractor after its discovery of such errors, omissions, discrepancies, inconsistencies or ambiguities without such notice and prior to response from the Construction Manager shall be done at the Contractor's risk.

1.05 ORDER OF PRECEDENCE OF THE CONTRACT DOCUMENTS

A. In resolving conflicts resulting from errors or discrepancies in any of the Contract Documents, the order of precedence shall be as follows:

1. Permits from other agencies as may be required by law.
2. Addenda, Supplemental Agreements and Change Orders, the one dated later having the precedence over another dated earlier.
3. Agreement (Section 00510).
4. Contractor's accepted Bid Form (Section 00400).
5. General Requirements (Division 1).
6. Supplementary General Conditions (Section 00800).
7. General Conditions (Section 00700).
8. Instructions to Bidders (Section 00200).
9. Notice Inviting Bids (Section 00100).
10. Technical Specifications (Division 2 and all other Divisions following).
11. Contract Drawings.
12. District Standard Specifications.
13. Reference/Standard Plans.
14. Reference/Standard Specifications.

B. With reference to the Drawings, the order of precedence is as follows:

1. Enumerated dimensions govern over scaled dimensions.
2. Detail drawings govern over general drawings.
3. Addenda/Change Order drawings govern over any other drawings.
4. Contract Drawings govern over standard drawings/plans.

C. The provisions of the Contract Documents shall take precedence over any Laws or Regulations applicable to the performance of the Work unless such an interpretation of the provisions of the Contract Documents would result in a violation of such Law or Regulation.

D. Minor Omissions:

1. If the Contract Documents are not complete as to any minor detail or required construction system or with regard to the manner of combining or Installing of parts, materials, or equipment, but there exists accepted trade standard for good and workmanlike construction, such detail will be deemed to have been included by the requirements of the Contract Documents in accordance with such standard.

1.06 ADDITIONAL DETAILED INSTRUCTIONS

A. District may furnish additional detailed written and/or graphic instructions to explain the Work more fully, and such instructions become a part of the requirements of the Contract Documents. Should Additional Detailed Instructions, in the opinion of the Contractor, constitute Work in excess of the requirements of the Contract Documents, the Contractor must submit written notice to the District within seven (7) Days following receipt of such instructions, and in any event prior to commencement of the Work thereon. If in the District's judgment the

Additional Detailed Instructions constitute Work in excess of the requirements of the Contract Documents, the Additional Detailed Instructions will be revised or the extra Work will be added by Change Order.

1.07 RIGHTS AND REMEDIES

A. The duties and obligations imposed by the Contract Documents and the rights and remedies available thereunder shall be in addition to, and not a limitation of, any duties, obligations, rights, and remedies otherwise imposed or available by law.

B. No action or failure to act by the District, the Design Engineer, or the Construction Manager shall constitute a waiver of any right or duty afforded any of them under the Contract, nor shall any such action or failure to act constitute an approval of or acquiescence in any breach thereunder, except as may be specifically agreed in writing.

****END ARTICLE 1****

## ARTICLE 2 - CONTRACT ADMINISTRATION

2.01 ADMINISTRATION OF THE CONTRACT

A. The District's Representative, the Construction Manager, and the Design Engineer will provide administration of the Contract as hereinafter described. These parties are designated in Section 00510, Agreement. If the status of any of the above parties should change, the District will provide written notice to the Contractor of such change.

B. Contractor recognizes that the District is a public agency and that it can act only through its duly authorized agents, and in this regard agrees that only written change orders, executed as specifically authorized by the governing body of the District either directly or through properly authorized agents, shall be valid. The District's Representative shall have no authority to issue a change order unless so specifically authorized, and no person shall have authority to issue any oral change order. Unless a valid change order is issued therefore, all changes in the work performed by the Contractor shall be at its own risk, and the Contractor shall not be entitled to any additional compensation on account thereof, and the Contractor may be required to make the work conform to the Specifications. No act or series of acts by the District during the course of the Contract shall be deemed to constitute a waiver of the right of the District to rely upon the provisions of this subparagraph.

C. The District's Representative shall decide any and all questions which may arise as to the quality or acceptability of materials furnished and work performed and as to the manner of performance and rate of progress of the work; all questions which arise as to the interpretation of the Plans and Specifications; all questions as to the acceptable fulfillment of the Contract on the part of the Contractor; and all questions as to claims and compensations.

D. Any decision of the District's Representative shall be final and he or she shall have executive authority to enforce and make effective such decisions and orders should the Contractor fail to carry out promptly.

2.02 DISTRICT'S AUTHORIZED REPRESENTATIVE

A. General:

1. The District's Representative has the authority to act on behalf of the District on change orders, field orders, progress payments, Contract decisions, acceptability of the Contractor's work, or early possession.

B. Change Orders/Field Orders:

1. The District's Representative has the authority to accept or reject change orders, field orders and cost proposals submitted by the Contractor or as recommended by the Construction Manager.

C. Progress Payments:

1. The District's Representative has the authority to accept or reject requests for progress payments which have been submitted by the Contractor and recommended by the Construction Manager.

D. Contract Decisions:

1. Should the Contractor disagree with the Construction Manager's decision with respect to the Contract, the Contractor may appeal to the District's Representative in accordance with the provisions of the Contract.

E. Acceptability of Work:

1. The District's Representative has the authority to make the final determination of the acceptability of the Work. The District's Representative also has the authority to accept or reject the Design Engineer's recommendations regarding retention of defective work as provided.

2.03 CONSTRUCTION MANAGER

A. General:

1. The Construction Manager is a representative of the District employed to act as advisor and consultant to the District in construction matters related to the Contract. The term Construction Manager may include more than one individual to perform contract administration and construction observation. Hereinafter, the term Construction Manager includes any and all representatives working under the direction of the Construction Manager.

2. All instructions to the Contractor and all communications from the Contractor to the District or the Design Engineer shall be forwarded through the Construction Manager. The Construction Manager will have authority to act on behalf of the District only to the extent provided in the Contract Documents. The District has delegated its authority to the Construction Manager to make initial decisions regarding questions which may arise as to the quality or acceptability of materials furnished and work performed, and as to the manner of performance and rate of progress of the Work under the Contract. The Construction Manager shall interpret the intent and meaning of the Contract and shall make initial decisions with respect to the Contractor's fulfillment of the Contract and the Contractor's entitlement to compensation. The Contractor shall look initially to the Construction Manager in matters relating to the Contract.
3. The Construction Manager's authority to act under Section 00700- Article 2, Contract Administration, and any decision made by it in good faith either to exercise or not to exercise such authority, shall not be interpreted or construed as control or responsibility of any of the work performed under this Contract.

B. Construction Manager’s Responsibility:

1. The Construction Manager will observe the progress, quality, and quantity of the Work to determine, in general, if the Work is proceeding in accordance with the provisions of the Contract Documents. The Construction Manager shall not be responsible for construction means, methods, appliances techniques, sequences, or procedures, or for safety precautions and programs in connection with the Work.
2. In accordance with the provisions detailed elsewhere in these General Conditions, the Construction Manager will make decisions relative to all matters of interpretation or execution of the Contract Documents.

C. Observation and Inspections of Construction:

1. The Construction Manager shall observe the construction and shall have the authority to reject work and materials which do not conform to the Contract Documents, and to require special inspection or testing.
2. Observation and inspection by an Inspector is not an authorization to revoke, alter, or waive any requirements of the Specifications. Observation and inspection by an Inspector is an authorization to call the attention of the Contractor to any failure of the Work, materials, or workmanship to conform to the Contract Documents. The Inspector shall have this authority including the ability to reject materials or, in any emergency, suspend the Work. The Contractor may appeal any such issue which it disagrees with to the Construction Manager for decision. If the decision of the Construction Manager is not satisfactory to the Contractor, the Contractor may appeal such decision to the District’s Representative.

D. Acceptability of the Work:

1. The Construction Manager has the authority to make a recommendation as to the acceptability of the Work.

E. Change Orders:

1. The Construction Manager has the authority to initiate change orders; to reject change orders proposed by the Contractor or Design Engineer; to negotiate and recommend acceptance of change orders; or to order minor changes in the Work at no cost to the District.

F. Construction Schedule:

1. The Construction Manager has the authority to review and recommend acceptance of the Progress Schedule submitted by the Contractor at the start of the Work and subsequent significant revisions for conformance to the specified sequence of work and logic.

G. Progress Payments:

1. The Construction Manager has the authority to recommend acceptance or rejection of requests for progress payments which have been submitted by the Contractor.

H. Completion:

1. The Construction Manager, with the assistance of the Design Engineer, will conduct inspections to determine the dates of Substantial Completion of the Work and final completion of the Work, and will receive and forward to the District, for the District's review, written warranties, and related documents required by the Contract and assembled by the Contractor.

2.04 DESIGN ENGINEER

A. General:

1. The Design Engineer will have the authority to act on behalf of the District only to the extent provided in the Contract Documents.

B. Interpretations:

1. The Design Engineer has the authority to be the initial interpreter of the technical requirements of the Contract Documents. Either party to the Contract may make written request to the Construction Manager for interpretations necessary for the proper execution or progress of the Work. The Construction Manager shall refer such written requests to the Design Engineer, who will render such interpretations. Where the Contractor has requested an interpretation from the Construction Manager, or been notified by the Construction Manager that such interpretation has been requested by the District, any work done before receipt of such interpretations, if not in accordance with same, shall be removed and replaced or adjusted as directed by the Construction Manager without additional expense to District.

C. Acceptability of the Work:

1. The Design Engineer has the authority to make a recommendation as to the acceptability of the Work. The Design Engineer has the authority to recommend acceptance regarding the retention of defective work.

D. Submittals

1. The Design Engineer shall receive, through the Construction Manager, shop drawings, product data, and samples for review in accordance with Section 01330, Submittal Procedures.

2. The Design Engineer has the authority to review and take other appropriate action upon the Contractor's submittal such as shop drawings, product data and samples, but only for conformance with the design concept of the Work and the information given in the Contract Documents.

****END ARTICLE 2****

**ARTICLE 3 - DISTRICT**

3.01 GENERAL

A. The District, acting through the District's Representative or the Construction Manager, shall have the authority to act as the sole judge of the Work and materials with respect to both quantity and quality as set forth in the Contract Documents.

3.02 ATTENTION TO WORK

A. The District’s Representative, Construction Manager, and Design Engineer are designated in Section 00510, Agreement. The Construction Manager's designated representative may be available at the Project Site of the Work. An alternate representative may be designated when the designated Construction Manager’s representative is not available at the Project Site of the Work. The Design Engineer may assign a representative to be available at the Project Site of the Work.

3.03 OBSERVATION AND INSPECTION

A. In addition to the Construction Manager’s designated representative, the District may provide one or more Inspectors to the Construction Manager to observe the work and with the same authority.

B. Separate and independent from the observations and inspections above, the Project may be inspected by others for code and permit compliance. Such inspectors shall have the authority provided to them by local jurisdiction.

3.04 DISTRICT’S RIGHT TO USE OR OCCUPY

A. The District reserves the right, prior to Substantial Completion, to occupy, or use, any completed part or parts of the Work, providing these parts or areas have been approved for occupancy or use by the District. Subject to applicable laws, the exercise of this right shall in no way constitute an acceptance of such parts, or any part of the Work, nor shall it in anyway affect the dates and times when progress payments shall become due from the District to the Contractor or in any way prejudice the District’s rights in the Contract, or any bonds guaranteeing the same. The Contract shall be deemed completed only when all the Work contracted has been duly and properly performed and accepted by the District.

B. Prior to such occupancy or use, the District and Contractor shall agree in writing regarding the responsibilities assigned to each of them for payments, security, maintenance, heat, utilities, damage to the Work, insurance, the period for correction of the Work, and the commencement of warranties required by the Contract Documents.

C. In exercising the right to occupy or use completed parts of the Work prior to the Substantial Completion thereof, the District shall not make any use which will materially increase the cost to the Contractor, without increasing the Contract Amount, nor materially delay the completion of the Contract, without extending the time for completion.

D. The part or parts of the Work, if any, which the District anticipates the use or occupancy of prior to Substantial Completion are noted in Division 1, General Requirements,. Failure to include a part of the Work in the above referenced section, shall not limit the District’s right to use or occupy parts of the Work not listed.

3.05 DISTRICT’S RIGHT TO CARRY OUT THE WORK

A. If the Contractor should neglect to prosecute the Work properly or fail to perform any provision of the Contract, and fails within five (5) days after receipt of written notice from the District to commence and continue correction of such neglect or deficiency with diligence and promptness, the District may, and without prejudice to any other remedy, make good such default, neglect or failure.

B. The District also reserves the right to perform any portion of the Work due to an emergency threatening the safety of the Work, public, District, and any property or equipment.

C. In either case, a Change Order shall be issued unilaterally deducting from the payments then or thereafter due the Contractor the cost of correcting such deficiencies and/or for performing such work, including compensation

for the Design Engineer's, the Construction Manager's, and District's additional services made necessary by such default, neglect, failure or emergency.

3.06 DISTRICT'S RIGHT TO PERFORM WORK AND TO AWARD SEPARATE CONTRACTS

A. The District reserves the right to perform work related to the Project with the District's own forces, and to award separate contracts in connection with the Project or other work on the Project Site.

B. When separate contracts are awarded for different portions of the Project or other work on the Project Site, the term "Contractor" in the Contract Documents in each case shall mean the contractor who executes each separate Agreement.

C. The District will provide for the coordination of the work of the District's own forces and of each separate contractor with the Work of the Contractor, who shall cooperate therewith as provided in Section 00700-6.02, Cooperation with District's Forces, and other contractors employed by District.

3.07 DISTRICT ACCESS TO WORK AREAS

A. The District, and its officers, agents, agents, employees, and any other duly authorized representatives and employees, and all duly authorized representatives of governmental agencies having jurisdiction over work areas or any part thereof shall at all reasonable times, for the purpose of determining compliance with Contract requirements, have access to such areas and the premises used by the Contractor. The Contractor shall also arrange for the District, and its officers, agents, employees, and any other duly authorized representatives and employees, to have access at all reasonable times to all places where equipment or materials are being manufactured, produced, or fabricated for use under the Contract.

B. The Contractor's attention is drawn to the fact that during the course of the work of this Contract, existing facilities will be used and maintained by District's personnel. The Contractor shall coordinate its work in such a way as to interfere as little as possible with the routine work of existing facility operation consistent with the necessity for making the connections as specified and as shown on the Project Drawings. The intent of this item is also that the Contractor's work force shall be excluded from access to and use of existing facilities except in direct pursuit of the work of this Contract, unless approved by the Engineer. The Contractor shall provide safe access at all times to all existing facilities for operating personnel and equipment.

3.08 DISTRICT-ACQUIRED PERMITS

A. Attention is directed to the Contract Documents and to any permits that may have been acquired by or imposed upon the District that contain requirements related to performance of the work, including but not limited to encroachment permits and storm water pollution prevention. All work within public properties and rights of way shall be accomplished in conformance with any specific conditions, instructions, and/or requirements contained in permits issued by the agencies having jurisdiction over such property and rights of way.

3.09 DISTRICT-ACQUIRED EASEMENTS

A. The District may provide easements for work under the Contract. District-provided easements are shown in the Contract Documents. All work within private and public properties shall be accomplished in conformance with any specific conditions, instructions, and/or requirements of the respective easements.

B. The District may provide additional easements for use of public or private property for working space, haul roads, and for storage of materials and equipment. District provided easements are shown in the Project Documents. The Contractor may use such property so provided for working space, haul roads, and for storage of materials and equipment. Should the Contractor find it necessary or advantageous to use any land, over and above that land that is provided, for any purpose whatever, the Contractor shall, at its expense, obtain a written agreement with the property owner and obtain approval from the District for the use of such land. A copy of any such agreement shall be submitted to the Engineer prior to implementation.

C. Nothing in the Contract shall be construed as allowing the Contractor to make any arrangements with any person to permit occupancy or use of any land, structure, or building for any Contract purpose whatsoever,

either with or without compensation, in conflict with any agreement between the District and any owner, former owner, or tenant of such land, structure, or building.

3.10 NON-RESPONSIBILITY OF THE DISTRICT

A. The District shall not be held responsible for the care or protection of any material or parts of the Work prior to the final acceptance, except as expressly provided in these Contract Documents.

****END ARTICLE 3****

**ARTICLE 4 - CONTRACTOR**

4.01 GENERAL RESPONSIBILITIES

A. Contractor must supervise and direct the Work, using its best skill and attention.

B. Contractor is solely responsible for all construction means, methods, techniques, operations, sequences and procedures, and for coordinating all portions of the Work.

C. Contractor is responsible to District for the acts and omissions of Contractor's employees, Subcontractors, Suppliers, their agents and employees, and all other persons performing any Work pursuant to a contract with Contractor.

D. Contractor will not be relieved from its obligations to perform the Work in accordance with the requirements of the Contract Documents, either by the activities or duties of District or District's consultants in their administration of the Contract, or by inspections, tests, acceptance, or approvals required or performed by persons other than Contractor.

E. Contractor must at all times enforce good order and discipline among its employees and must not employ on the Work anyone not skilled in the task assigned.

F. Contractor shall at all times employ qualified workers sufficient to prosecute the Work at a rate and in a sequence and manner necessary to complete the Work within the Contract Time(s). This obligation shall remain in full force and effect notwithstanding disputes or claims of any type.

G. Contractor warrants to District that all materials and equipment provided pursuant to the Contract are new unless otherwise specified, and that all Work is of good quality, free from faults and defects and in conformance with the requirements of the Contract Documents. All Work not conforming to these requirements, including substitutions not properly accepted and authorized by District's Authorized Representative may be considered defective. Upon request at any time, Contractor must furnish evidence, satisfactory to District, demonstrating the quality of installed materials and equipment.

H. Unless otherwise provided in the Contract Documents, the Contractor must provide and pay for all labor, materials, equipment, tools, construction equipment and machinery, water, heat, transportation, and other facilities and services necessary for proper execution and completion of the Work, whether temporary or permanent and whether or not incorporated or to be incorporated in the Work. The provision of utilities such as gas, electricity and water is governed by Section 01500, Construction Facilities and Temporary Controls.

I. Contractor has charge and care of all Work and all materials to be used therein (including materials for which Contractor has received partial payment or materials which have been furnished by District) until Acceptance of the Work. Contractor bears the risk of injury, loss, or damage to any part thereof by the action of the elements or from any other cause, whether arising from the performance or nonperformance of the Work, except as otherwise expressly provided.

J. Contractor must rebuild, repair, restore, and make good all injuries, losses, or damages to any portion of the Work or the materials by any cause before Completion and Acceptance.

K. Contractor must Provide suitable drainage and erect such temporary structures as are necessary to protect the Work or materials from damage. Suspension of the Work from any cause whatever will not relieve Contractor of responsibility for the Work and materials as herein specified.

L. The Contractor, at its expense, store and maintain all materials and equipment as specified in the Contract Documents or, where not specified, in such a manner as to assure the preservation of their quality and fitness, including warehousing if required by the Engineer, and so as to facilitate job-site safety and convenient inspection by the Engineer. Contractor must properly store materials which have been partially paid for by District or which have been furnished by District. Such storage by Contractor is on behalf of District who shall at all times be entitled to the possession of such materials. Contractor must promptly return such materials to the Project Site when requested. Contractor must not dispose of any of the materials so stored except upon District's written authorization.

4.02 STATUS OF CONTRACTOR, SUBCONTRACTORS AND SUPPLIERS

A. It is stipulated and agreed that the Contractor shall be an independent contractor in the performance of this Contract and shall have complete charge of persons engaged in performance of the Work. During the term of

the Contract, Contractor shall not under any circumstances be considered an employee, agent, or other representative of the District. Contractor is not authorized to bind District to any obligation. Nothing in this Contract creates any relationship of joint venture, partnership or any other association of any nature whatsoever between District and Contractor other than that of owner and independent contractor. District has the right to control Contractor only insofar as provided in this Contract and only insofar as the results of Contractor's work pursuant to the Contract. The District's right of supervision does not reduce or abrogate Contractor's liability for any and all damage or injury to persons, public property or private property that may arise directly or indirectly from Contractor's performance of the Work.

B. The Contractor shall perform the Work in accordance with its own means, methods, and appliances subject to compliance with the requirements of the Contract.

C. Subcontractors and Suppliers will not have or be recognized as having a direct relationship with the District. The persons engaged in the work, including employees of Subcontractors and Suppliers, will be considered employees of the Contractor and their work shall be subject to the provisions of the Contract. References in the Contract Documents to actions required of subcontractors, manufacturers, suppliers, or any person other than the Contractor, the District, or the Construction Manager shall be interpreted as requiring that the Contractor shall require such subcontractor, manufacturer, supplier, or person to perform the specified action.

4.03 CONTRACTOR REPRESENTATIVE

A. Only the Project Manager named in Section 00400 Bid Form Attachment A-**CERTIFICATION OF BIDDER'S EXPERIENCE AND QUALIFICATIONS,** or an equally qualified alternate approved by the District**,** will permitted as the Contractor's on-site authorized representative. The Contractor shall confirm in writing, before starting work, an authorized representative who shall have complete authority to represent and to act for the Contractor. Said authorized representative, or designated alternate, which has the authority to act in matters relating to the Contract, shall be personally present at the Project Site at all times while work is actually in progress on the Contract. During periods when the Work is suspended, arrangements acceptable to the District shall be made for any emergency work that may be required. The Contractor's authorized representative, or designated alternate(s), shall be fluent and proficient in the English language in order to understand, receive, and carry out oral and written communications or instructions relating to all job functions and responsibilities.

B. When the Contractor consists of two or more persons, firms, partnerships, limited liability companies, or corporations functioning on a joint venture basis, said Contractor shall designate in writing to the Construction Manager, the name of their authorized representative who shall have supreme authority to direct the work and to whom orders will be given by the Construction Manager, to be received and obeyed by the Contractor.

C. Information shall include the representative's name, street address, town, and office telephone number, cell phone number and email address.

D. The Contractor's authorized representative shall give its personal attention to and shall supervise the Work to the end that it shall at all reasonable times be prosecuted faithfully; and when the authorized representative or designated alternate is not personally present on the Work, the representative shall at all reasonable times be represented by a competent superintendent or foreman who shall receive and obey all instructions or orders given under this Contract, and who shall have full authority to supply materials, tools, and labor without delay, and who shall be the legally appointed representative of the Contractor. The Contractor shall be liable for the faithful observation of any instructions delivered to the Contractor or to its authorized representative.

E. The District's Representative shall have the right to remove and replace the Contractor's Authorized Representative at any time.

4.04 WORKPLACE ENVIRONMENT

A. The use or possession of alcohol, weapons, or illegal controlled substances by the Contractor, or others subject to the Contractor's control, on District property is prohibited. The Contractor shall not sell and shall neither

permit nor suffer the introduction or use of intoxicating liquors or non-prescribed illegal narcotics or drugs upon or about the Work.

B. The Contractor must ensure and maintain a workplace environment free of personal harassment and intimidation.

C. Conduct that creates an intimidating, hostile, or offensive workplace environment is prohibited. Such conduct includes, but is not limited to, the following:

1. Verbal harassment, e.g., epithets, derogatory comments or slurs;
2. Physical harassment, e.g., assault, impeding or blocking movement, gestures, staring, or any physical interference with normal work or movement;
3. Visual forms of harassment, e.g., derogatory posters, letters, poems, graffiti, cartoons, or drawings.

D. Unwelcome and unwanted sexual advances constitute sexual harassment that is prohibited. For example, requests for sexual favors and verbal or physical conduct of a sexual nature are prohibited.

E. It is the responsibility of the Contractor to:

1. Inform its employees and Subcontractors that behavior that creates an intimidating, hostile, or offensive workplace environment is prohibited;
2. Create a workplace environment that is free from harassment; and,
3. Take corrective action to stop prohibited behavior/conduct.

F. None but competent superintendents, forepersons, and workers shall be employed on the Work. The Contractor shall remove from the Work any person who commits trespass, possesses firearms or other weaponry, is under the influence or is in the possession of alcohol or other illegal drugs/controlled substance, or is, in the opinion of the Contractor or Construction Manager, disorderly, dangerous, insubordinate, incompetent, or otherwise objectionable.

G. If in the opinion of the District's Authorized Representative, any employee of the Contractor or Contractor's Subcontractors violate the prohibitions of this Section 00700-4.04, Workplace Environment, Contractor must immediately remove that person or Subcontractor from the Project upon District's request, and such person or Subcontractor must not be permitted to perform further Work on the Project Site.

H. Such above discharges and removal from the Project Site shall not be the basis of any claim for compensation or damages against the District, its officers, officials, employees, agents, and volunteers, the Design Engineer, the Construction Manager, and their partners, officers, employees, agents or any of its officers or representatives.

I. Nothing contained in 4.04, Workplace Environment, shall be used to shift the responsibility for supervision of Contractor's employees or subcontractors from the Contractor to the District's Authorized Representative or to require the District's Authorized Representative to take any action with regard to any employee of the Contractor or its subcontractors.

J. The Contractor shall maintain labor relations in such manner and by such methods as will provide for harmony among workers. The Contractor shall assure that its subcontractors of all tiers comply with the provisions set forth in this Section. Failure of the Contractor or any of its subcontractors at any tier to comply with these provisions shall be considered as grounds for termination of the Contract in accordance with Section 00700-8.09, District's Right to Terminate Contract.

4.05 COMPLIANCE WITH LAWS

A. General:

1. The District is a public agency in the State of California and is subject to the provisions of law relating to public contracts. It is agreed that all provisions of law applicable to public contracts are a part of these Contract Documents to the same extent as though set forth herein and will be complied with by Contractor.
2. The Contractor, shall at its own cost and expense, observe and keep itself and its Subcontractors fully informed of all existing and future legislated State and Federal Laws and District and County ordinances and regulations which in any manner affect those engaged or employed in the Work, or the materials and equipment used in the Work, or which in any way affect the conduct of the Work, and all such orders and

decrees of bodies or tribunals having any jurisdiction or authority over the same. If any discrepancy or inconsistency is discovered in the Drawings, Specifications, or in any other part of this Contract, in relation to any such law, ordinance, regulation, order, or decree, the Contractor shall immediately report the same to the Construction Manager in writing. The Contractor shall at all times observe and comply with all such existing and future laws, ordinances, regulations, orders and decrees; and shall protect, indemnify, defend and hold harmless the District, the Construction Manager, the Design Engineer, and all of their officers, officials, employees, agents, volunteers, and servants against any claim or liability arising from or based upon the violation of any such law, ordinance, regulation, order, or decree, whether by the Contractor itself, its employees, subcontractors, suppliers or others acting on the Contractor's behalf.

3. The following regulations and requirements that are included in the Contract Documents do not relieve the Contractor of the burden of ascertaining legal requirements that must be satisfied in accordance with this Section and applicable law.

B. Eight Hour Day Limitation

1. The Contractor's attention is directed to the provisions of Division 2, Part 7, Chapter 1, Article 3 of the Labor Code, State of California, and in particular Sections 1810 to 1815 inclusive. In accordance with California Labor Code §1810, eight (8) hours of labor in performance of the Work shall constitute a legal day's work under this Agreement. Contractor and any subcontractor shall pay workers overtime pay (not less than 1 1/2 times the base rate of pay) as required by Sections 1810 to 1815, inclusive, of the California Labor Code relating to working hours. Contractor and any Subcontractor shall, as a penalty to the District, forfeit the sum of twenty-five dollars ($25) for each worker employed in the execution of the Contract by the respective Contractor or Subcontractor for each calendar day during which the worker is required or permitted to work more than 8 hours in any one calendar day and 40 hours in any one calendar week in violation of the provisions of Article 3 of Chapter 1 of Part 7, Division 2 of the California Labor Code, which is incorporated by this reference as though fully set forth herein.

C. Prevailing Wage

1. The Work to be performed pursuant to this contract is "public works" subject to California Labor Code §1771, et. seq. and the applicable implementing regulations. The General Prevailing Wage Rates issued by the California Department of Industrial Relations may be adjusted by the State during the term of this Contract. Notwithstanding any other provisions of this Contract, Contractor will not be entitled to any adjustment in compensation rates in the event there are adjustments to the General Prevailing Wage Rates.

2. Contractor shall comply with California Labor Code §1775, whereby Contractor shall be assessed a penalty for each calendar day or portion thereof, for each worker paid less than the stipulated prevailing rates for such work or craft in which such worker is employed for any Work done pursuant to the Contract by Contractor or any Subcontractor in violation of the California Labor Code and in particular §1770 through §1780. In addition to said penalty and pursuant to §1775, Contractor shall pay each worker the difference between such stipulated prevailing wages and the amount paid to each worker for each calendar day or portion thereof for which each worker was paid less than the stipulated prevailing wage rate.

3. Pursuant to the provisions of California Labor Code §1770 and following, the California Department of Industrial Relations has ascertained the general prevailing rate of wages (which rate includes employer payments for health and welfare, vacation, pension, and similar purposes) applicable to the Work, for straight time, overtime, Saturday, Sunday, and Holiday work. The Holiday wage rate listed shall be applicable to all holidays recognized in the collective bargaining agreement of each craft, classification, or type of workers concerned. Said prevailing wage rates are on file in the District's offices, incorporated herein by reference, and copies of which are available to any interested party on request. The rates are also available on the State of California's Department of Industrial Relations home page website at http://www/dir.ca.gov.

4. If Contractor uses a craft or classification not shown on the prevailing wage determinations, Contractor may be required to pay the wage rate of that craft or classification most closely related to it, shown in the general determinations in effect when the Bids were received. Pursuant to California Labor Code §1773.2, Contractor shall prominently post a copy of such prevailing wages at each job site.

5. Pursuant to California Public Contract Code §6109, the Contractor shall not perform Work on this public works project with any Subcontractor who is ineligible to perform Work on a public works project pursuant

to §1777.1 or §1777.7 of the California Labor Code. Any contract on a public works project entered into between the Contractor and a debarred Subcontractor is void as a matter of law. A debarred Subcontractor may not receive any public money for performing Work as a Subcontractor on a public works contract, and any public money that may have been paid to a debarred Subcontractor by the Contractor on this Project shall be returned to the District. The Contractor shall be responsible for the payment of wages to workers of a debarred Subcontractor who has been allowed to work on the Project.

6. Pursuant to California Labor Code §1771.5.b.6, the District will withhold contract payments equal to the amount of underpayment and applicable penalties when, after investigation, it is established that underpayment of prevailing wage has occurred.

D. Certified Payrolls:

1. Contractor shall provide certified payroll records electronically to the Division of Labor Standards Enforcement in accordance with California Labor Code §1776. In addition to the California Labor Code requirements related to certified payroll records enumerated herein, the Contractor shall submit weekly certified payrolls and comply with all payroll requirements of this Section. Contractor and any subcontractor shall maintain and make available for inspection payroll records as required by California Labor Code §1776, which is incorporated by this reference as though fully set forth herein. Contractor is responsible for ensuring compliance with this Section. Contractor and each subcontractor shall keep an accurate payroll record, showing the name, address, social security number, work classification, and straight time and overtime hours worked each day and week, and the actual per diem wages paid to each journeyman, apprentice, worker, or other employee employed by the Contractor in connection with the Project. Said payroll shall be certified and shall be available for inspection at all reasonable hours at the principal office of the Contractor on the following basis:

   a. A certified copy of an employee's payroll record shall be made available for inspection or furnished to the employee or his or her authorized representative on request.

   b. A certified copy of all payroll records enumerated in Section 00700-4.07.D, herein, shall be made available for inspection or furnished upon request to the District, the Division of Labor Standards Enforcement, and the Division of Apprenticeship Standards of the Department of Industrial Relations.

   c. A certified copy of all payroll records enumerated in Section 00700-4.07.D, herein, shall be made available upon request by the public for inspection or for copies thereof; provided, however, that a request by the public shall be made through either the District, the Division of Apprenticeship Standards, or the Division of Labor Standards Enforcement. If the requested payroll records have not been provided pursuant to subparagraph (2) herein, the requesting party shall, prior to being provided the records, reimburse the costs of preparation by the Contractor, subcontractors, and the entity through which the request was made. The public shall not be given access to the records at the principal offices of the Contractor.

2. Certified payroll records shall be submitted electronically as required under California Labor Code §1776 to the Labor Commissioner pursuant to California Code of Regulations Chapter 8, §16404. Per §1776 of the Labor Code, the Contractor shall be responsible for the submittal of its own payroll records and the payroll records of all its subcontractors. All certified payroll records shall be accompanied by a statement of compliance signed by the Contractor indicating that the payroll records are correct and complete, that the wage rates contained therein are not less than those determined by the Director of the Department of Industrial Relations, and that the classifications set forth for each employee conform with the work performed. All such payroll records and compliance forms required hereunder shall be maintained by Contractor for a period of no less than three (3) years after the completion of the Work.

3. The Contractor is responsible for its and its subcontractors' compliance with the provisions of §1776 of the Labor Code.

4. Each Contractor shall file a certified copy of the records, enumerated in Section 00700-4.07.D with the entity that requested the records within ten (10) days after receipt of a written request. Any copy of records made available for inspection as copies and furnished upon request to the public or any public agency by the District, the Division of Apprenticeship Standards, or the Division of Labor Standards Enforcement shall be marked or obliterated in such a manner as to prevent disclosure of an individual's name, address, and social security number. The name and address of the Contractor awarded the Contract or performing the Contract shall not be marked or obliterated. The Contractor shall inform the District of the location of

the records enumerated under Section 00700-4.07.D including the street address, city and county, and shall, within five (5) working days, provide a notice of change of location and address. The Contractor shall have ten (10) days in which to comply subsequent to receipt of written notice specifying in what respects the Contractor must comply with this Section 00700-4.07.D. In the event that the Contractor fails to comply within the 10-day period, he or she shall, as a penalty to the State of California or the District, forfeit one hundred dollars ($100) for each calendar day, or portion thereof, for each worker, until strict compliance is effectuated. Upon the request of the Division of Apprenticeship Standards or the Division of Labor Standards Enforcement, these penalties shall be withheld from progress payments then due. Responsibility for compliance with Section 00700-4.07.D lies with the Contractor

5. On-Site Worker Interviews. The District or a representative of the District may make periodic Site visits to observe and interview workers regarding the payment of prevailing wages and proper work classifications. Contractor and each subcontractor shall cooperate and coordinate with the District and provide unaccompanied access to workers on the job Site.

6. Additionally, each contractor and every lower-tier subcontractor and supplier may be required to submit certified payrolls and labor compliance documentation electronically at the discretion of and the manner specified by the District. If requested, electronic submittal will be on a web-based system. Each contractor and subcontractor will be given a Log On identification and password to access the District reporting system. Use of the system may entail additional data entry of weekly payroll information including; employee identification, labor classification, total hours worked and hours worked on this project, wage and benefit rates paid, etc. This requirement will be necessary for every lower-tier subcontractor and vendor required to provide labor compliance documentation. Submission of payroll information electronically shall be inclusive of the project base bid indirect costs and no additional payment shall be made.

7. As required by §1773.1 of the California Labor Code, the Contractor shall pay travel and subsistence payments to each worker needed to execute the work, as such travel and subsistence payments are defined in the applicable collective bargaining agreements filed in accordance with this Section.

8. To establish such travel and subsistence payments, the representative of any craft, classification, or type of workman needed to execute the contracts shall file with the Department of Industrial Relations fully executed copies of collective bargaining agreements for the particular craft, classification, or type of work involved. Such agreements shall be filed within ten (10) days after their execution and thereafter shall establish such travel and subsistence payments whenever filed thirty (30) days prior to the call for bids.

9. The Contractor shall comply with the provisions of §1775 of the California Labor Code and shall, as a penalty to the District, forfeit not more than two hundred dollars ($200) for each calendar day, or portion thereof, for each worker paid less than the prevailing rate of per diem wages for each craft, classification, or type of worker needed to execute the contract. The Contractor shall pay each worker an amount equal to the difference between the prevailing wage rates and the amount paid worker for each calendar day or portion thereof for which a worker was paid less than the prevailing wage rate. Contractor is required to pay all applicable penalties and back wages in the event of violation of prevailing wage law, and Contractor and any subcontractor shall fully comply with California Labor Code §1775, which is incorporated by this reference as though fully set forth herein.

10. In accordance with the provisions of §1727 of the California Labor Code, the District, before making payment to the Contractor of money due under this contract, shall withhold and retain therefrom sufficient funds to satisfy any civil wage and penalty assessment issued by the Labor Commissioner under Chapter 1, Part 7, Division 2 of the California Labor Code (commencing with §1720). If the District has not retained sufficient money under the Contract to satisfy a civil wage and penalty assessment based on a Subcontractor's violations, Contractor shall, upon the request of the Labor Commissioner, withhold sufficient money due the Subcontractor under the Contract to satisfy the assessment and transfer the money to the District. These amounts shall not be disbursed by the District until receipt of a final order that is no longer subject to judicial review. However, no sum shall be withheld, retained, or forfeited, except from the final payment, without a full investigation by either the Division of Labor Standards Enforcement or by the District.

E. Apprentices:

1. The Contractor's attention is directed to the provisions of Labor Code §1777.5. The Contractor and any subcontractors shall, when they employ any person in any apprenticeable craft or trade, apply to the joint

apprenticeship committee administering the apprenticeship standards of the craft or trade in the area of the construction Site for a certificate approving the Contractor or subcontractor under the apprenticeship standards for the employment and training of apprentices in the area or industry affected; and shall comply with all other requirements of §1777.5 of the California Labor Code, which is incorporated by this reference as though fully set forth herein. The responsibility of compliance with California Labor Code §1777.5 during the performance of this contract rests with the Contractor. Pursuant to California Labor Code §1777.7, in the event the Contractor willfully fails to comply with the provisions of California Labor Code §1777.5, the Contractor shall be denied the right to bid on any public works contract for up to three (3) years from the date noncompliance is determined and shall be assessed civil penalties.

F. Receipt of Workers' Wages, Fee for Registering or Placing Persons In Public Works

1. Attention is directed to the provisions of §1778 and §1779 of the California Labor Code, which read as follows:

   a. "Section 1778. Every person, who individually or as a representative of an awarding or public body or officer, or as a contractor or subcontractor doing public work, or agent or officer thereof, who takes, receives or conspires with another to take or receive, for its own use or the use of any other person any portion of the wages of any workman or working subcontractor, in connection with services rendered upon any public work is guilty of a felony."

   b. "Section 1779. Any person or agent or officer thereof who charges, collects, or attempts to charge or collect, directly or indirectly, a fee or valuable consideration for registering any person for public work, or for giving information as to where such employment may be procured, or for placing, assisting in placing, or attempting to place, any person in public work, whether the person is to work directly for the state, or any political subdivision or for a contractor or subcontractor doing public work is guilty of a misdemeanor."

G. Labor Discrimination:

1. Contractor shall abide by all federal and state laws preventing discrimination in the employment of persons upon public works and shall ensure by appropriate contract provisions that all subcontractors are similarly obligated to comply with all such laws. These laws include, but are not limited to the following. California Labor Code §1735 which provides that “No discrimination shall be made in the employment of persons upon public works because of the race, religious creed, color, national origin, ancestry, physical disability, mental disability, medical condition, marital status, or sex of such persons, except as provided in Section 12940 of the Government Code, and every contractor for public works violating this Section is subject to all the penalties imposed for a violation of this chapter.” Likewise, Contractor and all of its subcontractors shall abide by the provisions of California Labor Code §1777.6 prohibiting discrimination in the acceptance of otherwise qualified apprentices; and California Labor Code §3095 which declares unlawful the discrimination in any recruitment or apprenticeship program on stated grounds. District shall be entitled to retain and withhold all penalties as authorized pursuant to California Labor code, Division 2, Part 7, Chapter 1, commencing with §1720 and following, in accordance with the provisions of that Chapter, and the regulations established by the Director of Industrial Relations pursuant to the statutory authority of such chapter.

H. Workers’ Compensation Insurance:

1. Attention is directed to the provisions found in Section 00700- Article 13, Insurance and Indemnification, for requirements of Workers’ Compensation Insurance and California Labor Code §3700.

I. Certified Electricians:

1. It is the sole responsibility of the Contractor to ensure compliance with California Labor Code §108- 108.5- Electrician Certification. The Contractor shall use, and/or cause its electrical subcontractor to use, properly certified electricians to perform electrical work and specifically all work covered under the Contract Documents.

2. Information on the electrician certification program may be obtained at the Division of Apprenticeship Standards (DAS) at:

https://www.dir.ca.gov/dlse/ecu/electricaltrade.html

3. The Division of Apprenticeship Standards also requires that all electricians in the State of California possess adequate training to perform their job. As such, all electricians must fall into one of the following categories:

   Journeyman- Certified

   Journeyman- Trainee

   Apprentice

4. Prior to commencement of electrical work, submit current and complete documentation of electrician certification or enrollment in a California state or Federal approved apprenticeship program for all electrical workers, or any relevant exception on which you intend to rely for satisfying the certification requirements.

J. Lateral and Subjacent Supports:

1. Attention is directed to §832 of the Civil Code of the State of California relating to lateral and subjacent supports, and wherever structures or improvements adjacent to the excavation may be damaged by such excavation, the Contractor shall comply with this law. As provided in California Labor Code §6707, a separate bid item is provided for costs of shoring and bracing of excavations five (5) feet or more in depth.

K. Safety Standards:

1. The Contractor shall comply with all applicable provisions of the Safety and Health Regulations of Construction, promulgated by the Secretary of Labor under Section 107 of the Contract Work Hours and Safety Standards Act (40 USC 327 et. seq.) as set forth in Title 29, C.F.R., Cal/OSHA, and the regulations issued thereunder. Compliance shall be the Contractor's sole responsibility, and neither the District, the Construction Manager nor the Design Engineer shall have any liability for non-compliance. See Section 00700-Article 12, Protection of Persons and Property, for additional safety requirements.

L. Asbestos Related Work:

1. All work involving asbestos containing material must be performed in accordance with California Labor Code, Sections 6501.5 through 6510, inclusive, and California Administrative Code, Title 8, Section 5208 and all other pertinent laws, rules, regulations, codes, ordinances, decrees and orders.

M. Public Records Act:

1. Except as otherwise provided herein, all records, documents, drawings, plans, specifications, and all other information relating to the conduct of District's business, including information submitted by the Contractor ("Records"), shall become the exclusive property of District and shall be deemed public records. Said Records are subject to the provisions of the California Public Records Act (Government Code §6250 et. seq.). The District's use and disclosure of its records are governed by this Act. The District will use its best efforts to inform the Contractor of any request for any financial records or documents marked "Trade Secret", "Confidential" or "Proprietary" provided by the Contractor to District.

2. Contractor, at its sole expense and risk, shall be fully responsible for any and all fees for prosecuting or defending any action brought or instituted by Contractor opposing disclosure of Records and shall indemnify and hold District harmless from all costs and expenses including attorney’s fees and costs of litigation in connection with any such action.

N. District will have no liability to Contractor or Contractor’s privity concerning disclosure of records in accordance with the California Public Records Act or other applicable law or in accordance with the direction of any competent authority, and Contractor, on behalf of itself, and its privities waives, releases and fully discharges such liability.

4.06 COMPLIANCE WITH ENVIRONMENT LAWS

A. During construction, the Contractor shall comply with all pertinent requirements of Federal, State, and local environmental laws and regulations, including, but not limited to, the Federal Clean Air Act, State and local air pollution and noise ordinances, construction Site erosion control regulations, and if applicable, shoreline

construction requirements. Specific requirements are further specified in Section 01060, Regulatory Requirements, and Permits, and Section 01560, Environmental Controls.

4.07 AUDITS AND ACCESS TO RECORDS

A. The Contractor must maintain all books, records, documents, electronic media, and other evidence directly pertinent to the performance of the Work in accordance with generally accepted accounting principles and practices consistently applied. The Contractor must also maintain all financial information and data used by the Contractor in the preparation or support of any cost submission, including the Contractor's Bid estimate, any Change Order, Dispute, Claim, Pay Application, or other request for equitable adjustment. District and its representatives will have access upon 24 hours advanced written notice, at all times during normal business hours, to all Contractors books, summary reports, records, accounts, estimates, documents, detailed financial information, certified payroll records, and all other relevant information and documentation for the purposes of inspection, audit, and copying. The Contractor will, at no cost to District, provide proper facilities for such access, inspection and copying purposes.

B. Contractor agrees to include and make the requirements of Section 00700-4.07, Audits and Access to Records, applicable to all Subcontracts and Sub-subcontracts or purchase orders in excess of $10,000, at any tier.

C. Audits conducted pursuant to Section 00700-4.07, Audits and Access to Records. A will be in accordance with general accepted auditing standards and established procedures and guidelines of the reviewing or audit agency.

D. The Contractor agrees to provide all information and reports resulting from access to records to District and other affected parties.

E. Records must be maintained and made available during the performance of the Work and for five (5) years after Final Payment, and until final settlement of all Disputes, Claims, or litigation, whichever occurs later. In addition, those records which relate to any portion of this Contract, to any Change Order, to any Dispute, to any litigation, to the settlement of any Claim arising out of such performance, or to the cost or items to which an audit exception has been taken, must be maintained and made available until Final Payment or final resolution of such Dispute, litigation, Claim, or exception, whichever occurs later.

F. The right of access provisions of Section 00700-4.07, Audits and Access to Records, applies to all financial records pertaining to this Contract:

1. to the extent the records pertain directly to Contract performance;
2. to the extent required for verification of the costs incurred where such costs are the basis for billings pursuant to this Contract including Change Orders;
3. to the extent there is any indication of violation of the California False Claims statute or that fraud, gross abuse, or corrupt practices may be involved;
4. if the Contract is terminated for default or convenience.

G. Access to records is not limited to the required retention periods. District's Authorized Representative or designee will have access to records at any reasonable time for as long as the records are maintained.

H. Pursuant to California Government Code §8546.7, if the amount of public funds to be expended is in excess of $10,000, this Contract will be subject to the examination and audit of the State Auditor, at the request of the District, or as part of any audit of the District, for a period of three (3) years after final payment under the Contract.

4.08 USE AND PROTECTION OF DISTRICT'S SITE AND ADJACENT PROPERTY

A. With the approval of the District, the Contractor may use portions of the District's Site for storage of construction equipment, materials, and field offices. Any Work site office facilities used by the Contractor and/or its privities must conform to all applicable codes, ordinances and regulations. The cost of such Work site office facilities shall be included in the Contract Price. The District will not accept any responsibility for damage to or loss of the Contractor's equipment or materials stored on any Project related Site caused by vandalism, theft, nature, or otherwise, suffered by the Contractor. Protection of all construction equipment, stores, and supplies shall be the sole responsibility of the Contractor. Where additional work space is desired by the Contractor or where the

District cannot provide the space to the Contractor, it shall be the Contractor's sole responsibility and expense to obtain such a space for its use.

B. All workers or representatives of the Contractor, subcontractors, or suppliers are admitted to the Site only for the proper execution of the Work in accordance with the Contract Documents. Furthermore, no persons may occupy property owned by the District outside the limit of the Work, as indicated on the drawings, without the express written permission of the District.

C. The Contractor shall enforce any instructions from the District or Construction Manager regarding combustible materials, placement of signs, danger signals, barricades, radios, noise, dust, use of District's restrooms and shower facilities, and smoking. Upon completion of the Work, the Contractor shall remove all temporary barricades, signs, and related materials. No advertising signs shall be erected at the Site(s) of the Work.

D. The Contractor shall determine safe loading capacities and shall not overload any structure, building, pipe, or other existing facility beyond its safe capacity during construction. In addition to any requirements imposed by law, the Contractor shall shore up, brace, underpin and protect as may be necessary all foundations and other parts of all existing structures, facilities and improvements on the Site or adjacent to the Site which are in any way affected by the Contractor's excavations or other operations connected with the Work. Prior to commencing any work which in any way affects adjoining or adjacent land or buildings thereon, or public utilities, the Contractor shall notify the Construction Manager to discuss responsibilities for properly notifying the owners/occupants of adjacent land and the protective measures taken by the Contractor. Upon request of the Construction Manager, the Contractor shall meet with the recipient of any notice or attend local public meetings as proper public outreach on local impacts caused by completion of the Work.

E. The Contractor shall take all necessary precautions to protect existing facilities against the effects of all weather and environmental elements and Contractor shall be strictly liable for failure to protect any facility.

F. All existing improvements and facilities shall be protected from any damage resulting from the operations, equipment, or workers of the Contractor during the entire Contract Time.

G. The Contractor shall take all steps necessary to protect all structures, buildings, land, and other facilities from fires and sparks originating from the Work. The Contractor shall comply with all laws and regulations regarding fire protection and shall comply with all instructions given by the fire department with jurisdiction.

H. Any damage to existing conditions, or to any other improvement or property above or below the ground surface, whether public or private, arising from the Contractor's operations or performance of the Work shall be repaired within forty-eight (48) hours by the Contractor without expense to the District, unless disruption of the District's operations or creation of a safety hazard has occurred, in which case damage will be repaired immediately. The forty eight (48) hour non-emergency repair response time may be extended only if agreed to in writing by the District and/or private property owner. Any delays to the project completion times caused by such repairs shall be considered non-compensable and no further extension of the Contract Time will be granted therefor. Should the Contractor fail to timely repair damage caused by its operations or performance in accordance with this Section, the District may take steps to protect property and life, in its sole discretion, and deduct entire cost of such work from amounts due or that may become due the Contractor. No prior notice to the Contractor shall be necessary for the District to take such action.

I. The Contractor shall give at least 72 hours advance notice to the District before commencing any street work (such as pavement grinding or trenching) that may potentially damage any traffic signal detection loop wires or any other signal facility. This requirement is in addition to any Underground Services Alert notification action by the Contractor. The District will mark underground traffic signal facilities. The Contractor shall not proceed with any grinding, trenching, or other underground work until it has been verified with the Inspector that signal facilities have been marked. The Contractor shall be responsible for all damage to traffic signal facilities arising from failure to properly comply with these provisions.

J. In the event that the Contractor's construction activities cause any failure of a traffic facility, it shall be repaired and be made fully operable within 24 hours of the damage occurring. In the event that such repair is not undertaken within this time limit, the District will repair the facility and deduct the cost from monies due to the Contractor. The amount deducted will consist of the repair cost and a 25% markup for administrative costs.

4.09 FEES AND PERMITS

A. The California Environmental Quality Act (CEQA) (Public Resources Code, §21000 and following), may be applicable to permits, licenses and other authorizations which the Contractor must obtain from local agencies

in connection with performing the work of the Contract. The Contractor shall comply with the provision of those statutes in obtaining such permits, licenses, and other authorizations, and they shall be obtained in sufficient time to prevent delays in the Work. In the event that the District has obtained permits, licenses, or other authorization applicable to the work in conformance with the requirements of CEQA, the Contractor shall comply with the provisions of these permits, licenses, and other authorizations.

B. The requirements for fees and permits are specified in Section 01060, Regulatory Requirements and Permits.

4.10 PROVISIONS FOR HANDLING EMERGENCIES

A. It is possible that emergencies may arise during the progress of the Work, which may require special treatment or make advisable extra shifts of labor forces to continue the Work for twenty four (24) hours per day. These emergencies may be caused by damage or possible damage to nearby existing structures or property by reason of the work under construction, or by storm, accidents, or leakage. The Contractor shall be prepared in case of such emergencies to make all necessary repairs and shall promptly execute such work when required by the Construction Manager. The determinations made by the Construction Manager for handling emergencies shall be final and conclusive upon the parties. Upon start of the Work, Contractor shall provide means for immediate emergency notification of Contractor's designated representative and designated emergency alternates.

4.11 STANDARD AND NONSTANDARD WORKING HOURS

A. Work hours shall conform to all applicable Federal, State, County, and local laws, ordinances, and codes applicable to the Work. Where any of these laws are in conflict, the more stringent requirements shall be followed.

B. All work shall be performed during the hours of 7:00 a.m. and 6:00 p.m., Monday through Friday. This restriction includes deliveries of materials and equipment and servicing of construction equipment on the Project Site. Any work outside this time frame shall be allowed only with prior written permission from the Owner's Representative. The actual time the Owner's personnel, Construction Manager or Engineer spend working outside this time frame shall be billed to the Contractor at the personnel's standard charge out rate. Any work designated to have a special time frame shall be so noted on the Plans and/or elsewhere in these Specifications and shall be excluded from this reimbursement.

C. The Contractor may be required to prosecute the Work at night or outside of the standard working hours defined in 4.11.B above. Such work may be required due to project and/or operational constraints as defined in the Contract Documents, or if emergencies arise as provided for in Section 00700-4.10, Provisions for Handling Emergencies. When required, ordered, or permitted to work at night, the Contractor shall provide sufficient and satisfactory lighting and other facilities therefor. Subject to applicable law, for work outside of the normal working hours, the Contractor shall receive no extra payment, but compensation shall be considered as having been included in the price stipulated for the Work, except for authorized work performed outside of the Contract requirements.

D. Should the Contractor perform work outside of the standard hours of 7:00 a.m. and 6:00 p.m., Monday through Friday without the Owner's written permission, the Owner will charge the Contractor, as a penalty, five hundred dollars ($500.00) for each infraction. This charge will be deducted from the next progress payment due Contractor.

E. If by 9:00 a.m. each and every work day the Contractor is not going to perform any work, the Contractor is to review the entire Site, considering all situations, and notify the Construction Manager that the Site has been reviewed and the Site is secure. Should any mitigation be necessary, the Contractor should also advise the Construction Manager.

****END ARTICLE 4****

## ARTICLE 5 - SUBCONTRACTORS

5.01 SUBLETTING AND SUBCONTRACTING

A. The Contractor must adhere to the rules governing subcontracting as set forth in the Subletting and Subcontracting Fair Practices Act, commencing with Public Contract Code §4100. Subcontractor substitutions must be in accordance with provisions of the Subletting and Subcontracting Fair Practices Act, beginning with Public Contract Code §4100. Violations of this Act by the Contractor may subject the Contractor to penalties and disciplinary action pursuant to the Subletting and Subcontracting Fair Practices Act.

B. The Contractor is responsible for all Work performed pursuant to the requirements of the Contract Documents, including Work Subcontracted to others. All persons engaged in the Work of the Project are the responsibility of and subject to the control of the Contractor.

C. No Subcontractor will be recognized as such, and all persons engaged in the Work will be considered as employees of Contractor who is responsible for their work, which is subject to all the provisions of the Contract Documents.

D. When any Subcontractor fails to execute a portion of the Work in a manner satisfactory to District, the Contractor must remove such Subcontractor immediately upon written notice from District, and the Subcontractor must not again be employed on the Project.

E. Although the Contract Documents are divided into Sections, Articles, Parts, Sub-Parts and Divisions, Sections, and Paragraphs, it is not intended to provide a basis for the Bidding, assignment, or performance of the Work. Contractor is fully responsible for assigning the Work to the various Subcontractors, Suppliers and vendors that will be bidding or performing the Work. The District will not entertain requests to arbitrate disputes among Subcontractors or between the Contractor and Subcontractor(s) concerning responsibility for performing any part of the Work.

5.02 SUBCONTRACTOR'S CONTRACTUAL OBLIGATIONS

A. By an appropriate agreement, Contractor shall require each Subcontractor, to the extent of that Subcontractor's work, to be bound to Contractor by the terms of the Contract, and to assume toward Contractor all the obligations and responsibilities which Contractor, by these Contract Documents, assumes toward District.

B. Said subcontracts and agreements must preserve and protect District's rights pursuant to the Contract with respect to the Subcontractor's or Suppliers Work so the subcontracting thereof will not prejudice such rights. Contractor must require each Subcontractor to enter into similar agreements with its Sub subcontractors.

C. Contractor must make available to each proposed Subcontractor and Supplier, prior to execution of the subcontract or agreement, copies of the Contract Documents to which the Subcontractor or Supplier will be bound and, upon written request of the Subcontractor or Supplier, identify to the Subcontractor or Supplier any terms and conditions of the proposed subcontract or agreement that may be at variance with the Contract. Each Subcontractor must similarly make copies of all such Documents available to its proposed Sub subcontractors.

D. The Contractor shall not employ any subcontractors that are not properly licensed in accordance with State law. Prior to commencement of any work by a subcontractor, the Contractor shall submit verification to the Construction Manager that the subcontractor is properly licensed for the work it will perform.

E. Each subcontract agreement shall expressly incorporate by reference the Contract Documents, including the following provisions:

1. Each subcontractor shall carry insurance as required by the Contract Documents, and provide evidence of such insurance, as provided in Section 00700- Article 13, Insurance and Indemnification.

2. Each subcontractor shall be obligated to defend, indemnify, and hold harmless the District and additional insureds listed in Section 00700- Article 13, Insurance and Indemnification, from all claims arising from the subcontractor's portion of the Work in the same manner as Contractor.

3. Each subcontract shall include language assigning the subcontract to the District in the event District terminates Contractor. The assignment shall be effective at District's discretion. The Contractor hereby assigns to the District each Subcontract entered into by Contractor for performance of any part of the Work provided that:

a. The assignment is effective only after the District's termination of the Contractor's right to proceed under the Contract Documents, (or portion thereof relating to that Subcontract), see Section 8.09, District's Right to Terminate Contract;
b. The assignment is effective only for the Subcontracts which the District expressly accepts by notifying the Subcontractor in writing;
c. The assignment is subject to the prior rights, if any, of the Surety, where the Surety exercises its rights to complete the Contract;
d. After the effectiveness of an assignment, the Contractor shall, at its sole cost and expense, sign all instruments and take all actions reasonably requested by the District to evidence and confirm the effectiveness of the assignment to the District;
e. Nothing in this paragraph shall modify or limit any of the Contractor's obligations to the District arising from acts or omissions occurring before the effectiveness of any Subcontract assignment, including but not limited to all defense, indemnity and hold harmless obligations arising from or related to the assigned Subcontract; and
f. The District may accept the assignment at any time during the course of the Work and prior to Final Completion in the event of a suspension or termination of Contractor's rights under the Contract Documents. Such assignment is part of the consideration to the District for entering into the Contract with the Contractor and may not be withdrawn.

5.03 CONTROL OF SUBCONTRACTORS

A. Subcontractors will not be recognized as having a direct relationship with the District. The persons engaged in the work, including employees of subcontractors and suppliers, will be considered employees of the Contractor and their work shall be subject to the provisions of the Contract. References in the Contract Documents to actions required of subcontractors, manufacturers, suppliers, or any person other than the Contractor, the District or the Construction Manager shall be interpreted as requiring that the Contractor shall require such subcontractor, manufacturer, supplier or person to perform the specified action.

B. Contractor must:

1. Schedule and coordinate the Work of all Subcontractors;
2. Instruct all Subcontractors to consult with other Subcontractors to ascertain the locations of their various materials including stored materials and to familiarize themselves with their own material locations, making such changes as required to obtain the best results;
3. Instruct all Subcontractors to schedule their Work and cooperate with the other Subcontractors to avoid delays, interferences, and unnecessary work, to conform to the schedule of operations as indicated in the Official Progress Schedule, and make Installations when and where directed.
4. Make all necessary changes, including removing and reinstalling of materials, at their sole expense if they fail to check with other Subcontractors, and their Installed Work is later found to interfere with Work of other Subcontractors.
5. Follow up to ensure that all Subcontractors install their Work when and where directed.

****END ARTICLE 5****

## ARTICLE 6 - CONSTRUCTION BY DISTRICT OR BY SEPARATE CONTRACTORS

6.01 DISTRICT'S RIGHT TO PERFORM CONSTRUCTION AND AWARD SEPARATE CONTRACTS

A. District has the right to perform work at any time related to the Project with its own forces and/or to Award separate contracts in connection with other portions of the Project or other work on the Site pursuant to these or similar conditions of this Contract.

B. When separate contracts are awarded for different portions of the Project or other work on the Site, the term contractor in the Contract Documents in each case means the contractor who executes each separate District/Contractor Agreement.

6.02 COOPERATION WITH DISTRICT'S FORCES AND OTHER CONTRACTORS EMPLOYED BY DISTRICT

A. Unless otherwise indicated in the Contract Documents, District will provide for the coordination of the work of District's own forces and of each separate contractor with the Work of the Contractor, who must cooperate therewith as provided herein.

B. When Contractor and one or more other contractors are employed by District on related or adjacent work, Contractor must not cause any unnecessary delay or hindrance to the other contractors.

C. If the performance of the Work of this Contract is likely to be interfered with by the simultaneous performance of the work of some other separate contract or contracts, the District will decide which contractors or Contractor may proceed.

D. Contractor must accommodate District move-in activities including installation of Furniture, Fixtures, and Equipment (FF&E) by District or others.

6.03 MUTUAL RESPONSIBILITY

A. The Contractor must cooperate fully with District and all separate contractors including utility companies with regard to the execution of their Work as follows:

1. The Contractor must cooperate fully with District and all separate contractors with regard to introduction and storage of their materials and equipment.
2. The Contractor must coordinate with District, all separate contractors, and all utility companies with regard to construction scheduling, sequence of operations and Site access, all subject to approval of the District. Contractor must include activities in Contractor's Progress Schedule for all on-site activities performed by utility companies.
3. The Contractor must coordinate and accommodate the concurrent installation of inserts, hangers, blocking, and all other items or embeds to be installed by others within or upon the Contractor's Work. The Contractor must coordinate and schedule the concurrent installation of these items in such a manner to cause no Critical Path delay to its Work or the work of others.
4. The Contractor must properly connect the Work to the work of District or the separate contractors.
5. The Contractor must inspect the work of District or other contractors affecting the Work and promptly report to the District in writing irregularities or defects in the separate work that render it unsuitable for reception or connection of the Work.
6. Failure of the Contractor to inspect and report constitutes acceptance of the other work as fit and proper to receive the Work, except as to defects that may develop in the other work after execution of the Contractor's Work.

6.04 DISTRICT'S RIGHT TO CLEAN UP

A. If a disagreement or Dispute arises among the Contractor, separate contractors and/or District as to the responsibility pursuant to their respective contracts for maintaining the Project Site and surrounding areas free from waste materials and rubbish, District may clean up or cause to be cleaned up the waste, materials, and rubbish and allocate the costs among those responsible, and deduct each contractor's share from progress payments due or to become due to each contractor.

****END ARTICLE 6****

## ARTICLE 7 - CONTROL OF THE WORK AND MATERIALS

### 7.01 MEANS, METHODS AND APPLIANCES

A. The means, methods, and appliances adopted by the Contractor shall be planned and executed to produce the highest grade quality of work and will enable the Contractor to complete the Work in the time agreed upon. The District and Construction Manager shall not supervise, direct, or have control over, or be responsible for, Contractor's means, methods and appliances of construction or for the safety precautions and programs incident thereto, or for any failure of Contractor to comply with laws and regulations applicable to the furnishing or performance of Work. However, if at any time the means, methods and appliances appear inadequate or of inferior quality, the Construction Manager may order the Contractor to improve their character or efficiency, and the Contractor shall conform to such order; failure of the Construction Manager to order such improvement of methods of efficiency will not relieve the Contractor from its obligation to perform satisfactory work and to finish the Work in the time agreed upon.

B. The approval by the Engineer of any drawing or any method of work proposed by Contractor does not relieve Contractor of responsibility for any errors and is not an assumption of risk or liability by District or any District officer or employee. Contractor has no claim under the Contract on account of the failure or partial failure or inefficiency of any plan or method so approved. Such approval by the Engineer merely means that the Engineer has no objection to Contractor's using, at Contractor's sole responsibility and risk, the plan or method Contractor proposes.

C. Subject to the Contract Times specified in the Contract Documents, the Contractor is solely responsible for planning and scheduling the means, methods, and appliances to address weather conditions that may occur during the course of the Work. The Contractor is solely responsible for all costs to address such means, methods, and appliances and for the direct and indirect costs resulting from weather conditions

### 7.02 CONTRACTOR'S RESPONSIBILITY FOR WORK

A. Until the formal acceptance of the work by the District, the Contractor shall have the charge and care and shall bear the risk of injury or damage to any part thereof by the action of the elements or from any other cause, whether arising from the execution or non-execution of the work.

B. The Contractor shall rebuild, repair, restore and make good all injuries or damages to any portion of the work occasioned by any of the above causes before final acceptance and shall bear the expense, except such injuries or damages occasioned by the acts of the Federal government or acts of war.

C. In case of suspension of work from any cause whatsoever, the Contractor shall be responsible for the work as previously specified and shall also be responsible for all materials delivered to the work. Where necessary to protect the work from damage, the Contractor shall, at his own expense, provide suitable drainage of the worksite and erect such temporary structures as necessary to protect the work from damage during any period of suspension of work.

D. The Contractor shall provide twenty-four (24) hour emergency service for all maintenance and operations of the work specified and shall supply the District with the name and phone number of the responsible person. Emergency service shall be within thirty (30) minutes from the time of notification. If the Contractor fails to provide this service, the District shall perform such emergency service and the cost thereof shall be deducted from the next progress pay estimate due the Contractor.

### 7.03 SUPPLY OF SUFFICIENT WORKERS

A. The Contractor shall at all times employ qualified workers sufficient to prosecute the Work at a rate and in a sequence and manner necessary to complete the Work within the Contract Time(s). This obligation shall remain in full force and effect notwithstanding disputes or claims of any type. At any time during the progress of Work, should Contractor directly or indirectly (through subcontractors), refuse, neglect, or be unable to employ a sufficient number of qualified workers to prosecute the Work as required, then the District may require the Contractor to accelerate the Work and/or furnish additional qualified workers as District may consider necessary, at no cost to District.

B. If Contractor does not comply with the notice within five (5) days of date of service thereof. District shall have the right (but not a duty) to provide qualified workers to finish the Work or any affected portion of Work, as District may elect. District may at its discretion, exclude Contractor from the Site, or portions of the Site or separate Work elements during the time period that District exercises this right. District will deduct from moneys

due or which may thereafter become due under the Contract Documents, the sums necessary to meet expenses thereby incurred and paid to persons doing Work. District will deduct from funds or appropriations set aside for purposes of Contract Documents, the amount of such payments and charge them to Contractor as if paid to Contractor. Contractor shall remain liable for resulting delay, including liquidated damages and indemnification of District from claims of others.

C. Exercise by District of the rights conferred upon District in this Section 00700, General Conditions, is entirely discretionary on the part of District. District shall have no duty or obligation to exercise the rights referred to in Section 00700-7.03, Supply of Sufficient Workers, and its failure to exercise such rights shall not be deemed an approval of existing Work progress or a waiver or limitation of District's right to exercise such rights in other concurrent or future similar circumstances. The rights conferred upon District under Section 00700-7.03, Supply of Sufficient Workers, are cumulative to District's other rights under any provision of the Contract Documents.

7.04 MATERIALS AND WORKMANSHIP

A. Unless otherwise indicated in these Specifications, or favorably reviewed by the Design Engineer, materials and equipment for the construction work shall be the best grade in quality of a manufacturer regularly engaged in the production of such materials and equipment or materials and equipment of comparable character. All materials must be of the specified quality and equal to approved samples, if samples have been submitted. All work shall be done and completed in the best workmanlike manner. All permanent materials and equipment shall be new unless otherwise specified.

B. All defective work or materials shall be promptly removed from the premises by the Contractor, whether in place or not, and shall be replaced or renewed in such manner as the Construction Manager may direct. All materials and workmanship of whatever description shall be subjected to the inspection of, and rejection by, the Construction Manager if not in conformance with the Contract Documents. The decision of the Construction Manager is final and conclusive upon the parties.

C. Unless otherwise stipulated in the Contract Documents, any defective material or workmanship, or any unsatisfactory or imperfect work which may be discovered before the final acceptance of the Work or within one (1) year thereafter, shall be corrected immediately upon the receipt of notice from the Construction Manager, without extra charge, notwithstanding that it may have been overlooked in previous inspections and estimates. Failure to inspect work shall not relieve the Contractor from any obligation to perform sound and reliable work as herein described.

D. In the event that the Contractor shall fail to comply with the conditions of the foregoing guarantee within ten (10) calendar days' time after the date of written notification of the defect, the District shall have the right, but shall not be obligated to repair, or obtain the repair of, the defect and the Contractor shall pay to the District on demand all costs and expense of such repair. Notwithstanding anything herein to the contrary, in the event that any defect in workmanship or material covered by the foregoing guarantee results in a condition which constitutes an immediate hazard to the health or safety, or any property interest, or any person, the District shall have the right to immediately repair, or cause to be repaired, such defect, and the Contractor shall pay to the District on demand all costs and expense of such repair. The foregoing statement relating to hazards to health, safety or property shall be deemed to include either temporary or permanent repairs which may be required as determined in the sole discretion and judgment of the District.

7.05 USE OF MATERIALS FOUND ON THE PROJECT SITE

A. The District does not warrant the suitability of any native material on the Project Site for use in the Project. The Contractor, with the approval of the Engineer, may use in the proposed construction such stone, gravel, sand or other material as may be found on the Project Site and deemed suitable in the opinion of the Engineer. The Contractor shall replace at his own expense all of that portion of the material so removed and used with other suitable material. No charge for native materials so used will be made against the Contractor. The Contractor shall not excavate or remove any material from any roadway location that is not within the excavation, as indicated by the slope and grade lines shown on the Contract Drawings, without written authorization from the Engineer.

7.06 EXISTING UTILITIES

A. General:

1. The location of known existing utilities and pipelines are shown on the Drawings in their approximate locations. However, nothing herein shall be deemed to require the District to indicate the presence of

existing service laterals or appurtenances whenever the presence of such utilities on the Site of the Project can be inferred from the presence of other visible facilities, such as buildings, cleanouts, meter and junction boxes, on or adjacent to the Site of the Project.

2. The District will assume the responsibility for the timely removal, relocation, or protection of existing main or trunkline utility facilities located on the Project Site if such utilities are not identified by the District in the Contract Documents or which cannot reasonably be inferred from the presence of other visible facilities.

B. Utility Relocation:

1. It shall be the Contractor's responsibility to determine the exact location and depth of all utilities, including service connections, which have been marked by the respective utility owners and which the Contractor believes may affect or be affected by the Contractor's operations. The Contractor shall not be entitled to additional compensation or time extensions for work necessary to avoid interferences nor for repair to damaged utilities if the Contractor does not expose all such existing utilities as required by this Section.
2. The locating of utilities shall be in conformance with California Government Code §4216 et seq. except for the District's utilities located on the District's property and not on public right-of-way.
3. A "High Priority Subsurface Installation" is defined in §4216 (j) as "high-pressure natural gas pipelines with normal operating pressures greater than 415kPA gauge (60 psig) or greater than six inches nominal pipe diameter, petroleum pipelines, pressurized sewage pipelines, high- voltage electric supply lines, conductors, or cables that have a potential to ground of greater than or equal to 60kv, or hazardous materials pipelines that are potentially hazardous to workers or the public if damaged."
4. A "Subsurface Installation" is defined in California Government Code §4216 (ls) as "any underground pipeline, conduit, duct, wire, or other structure, except non-pressurized sewer lines, non-pressurized storm drains, or other non-pressurized drain lines."
5. Pursuant to California Government Code §4216.2 the Contractor shall contact the appropriate regional notification center at least two (2) working days but not more than fourteen (14) calendar days before performing any excavation. The Contractor shall request that the utility owners conduct a utility survey and mark or otherwise indicate the location of their service. The Contractor shall furnish to the Construction Manager written documentation of its contact(s) with the regional notification center prior to commencing excavation at such locations.
6. After the utility survey is completed, the Contractor shall commence "potholing" or hand digging to determine the actual location of the pipe, duct, or conduit. The Construction Manager shall be given notice prior to commencing potholing operations. The Contractor shall uncover all piping and conduits, to a point one (1) foot below the pipe when required by the District, where crossings, interferences, or connections are shown on the Drawings, prior to trenching or excavating for any pipe or structures, to determine actual elevations. New pipelines shall be laid to such grade as to clear all existing facilities, which are to remain in service for any period subsequent to the construction of the run of pipe involved.
7. The Contractor's attention is directed to the requirements of California Government Code §4216.2 (c) which provides: "When the excavation is proposed within 10 feet of a high priority subsurface installation, the operator of the high priority subsurface installation shall notify the excavator of the existence of the high priority subsurface installation to set up an onsite meeting prior to the legal excavation start date and time or at a mutually agreed upon time to determine actions or activities required to verify the location and prevent damage to the high priority subsurface installation. As part of the meeting, the excavator shall discuss with the operator the method and tools that will be used during the excavation and the information the operator will provide to assist in verifying the location of the subsurface installation. The excavator shall not begin excavating until after the completion of the onsite meeting." The Contractor shall notify the Construction Manager in advance of this meeting.

C. Utility Relocation and Repair:

1. If interferences occur at locations other than those indicated in the Contract Documents with reasonable accuracy, the Contractor shall notify the Construction Manager in writing. The Construction Manager will supply a method for correcting said interferences in accordance with the responsibilities of this Section and California Government Code §4215.
2. Care shall be exercised by the Contractor to prevent damage to adjacent existing facilities and public or private works; where equipment will pass over these obstructions, suitable planking shall be placed. If high

priority subsurface installations are damaged and the operator cannot be contacted, the Contractor shall call 911 emergency services.

3. The District will compensate the Contractor for the costs of locating and repairing damage not due to the failure of the Contractor to exercise reasonable care, and for removing or relocating such main or trunk line utility facilities not indicated in the Contract Documents with reasonable accuracy, and for the cost of equipment on the Project necessarily idled during such work. The payment for such costs will be made as provided in Section 00700-Article 9, Changes in the Work. The Contractor shall not be assessed liquidated damages for delay in completion of the Project, when such delay is caused by the failure of the District or utility company to provide for removal or relocation of such utility facilities. Requests for extensions of time arising out of utility relocation or repair delays shall be filed in accordance with Section 01324, Progress Schedules and Reports.
4. The public utility, where they are the owner of the effected utility, shall have the sole discretion to perform repairs or relocation work or permit the Contractor to do such repairs or relocation work at a reasonable price. The right is reserved to the District and the owners of utilities or their authorized agents to enter upon the Work area for the purpose of making such changes as are necessary for the rearrangement of their facilities or for making necessary connections or repairs to their properties. The Contractor shall cooperate with forces engaged in such work and shall conduct its operations in such a manner as to avoid any unnecessary delay or hindrance to the work being performed by such forces and shall allow the respective utilities time to relocate their facility.
5. When the Contract Documents indicate that a utility is to be relocated, altered, or constructed by others, the District will conduct all negotiations with the utility company and the work will be done at no cost to the Contractor, unless otherwise stipulated in the Agreement.
6. Temporary or permanent relocation or alteration of utilities desired by the Contractor for its own convenience shall be the Contractor's responsibility and it shall make arrangements and bear all costs for such work.
7. All Underground Services Alert (USA) markings on concrete or asphaltic pavement or other structures shall be removed when they are no longer required. Acceptable means of removal include sand blasting or high pressure water blasting.

****END ARTICLE 7****

## ARTICLE 8 - PROGRESS OF THE WORK AND TIME

8.01 COMMENCEMENT OF THE WORK

A. Within ten (10) calendar days after receipt of the required bonds and evidences of insurance and the executed Agreement from the Contractor, written Notice to Proceed will be given by the District to Contractor. Notwithstanding other provisions of the Contract, the Contractor shall not be obligated to perform work, and the District shall not be obligated to accept or pay for work performed by the Contractor, prior to Notice to Proceed. The Contractor shall provide the required Contract bonds and evidences of insurance prior to Notice to Proceed and commencing work at the Site.

B. The Contractor shall commence the Work covered by this Contract within ten (10) days after the date established in the Notice to Proceed for the commencement of Contract Time.

C. The Contractor shall give the Construction Manager written notice not less than two (2) working days in advance of the actual date on which the work will be started. The Contractor shall be entirely responsible for any delay in the work which may be caused by its failure to give such notice.

8.02 CONTRACT TIME

A. Time is of the essence in the performance of this Contract. The Contractor shall prosecute the work so that the various portions of the project shall be complete and ready for use within the time specified in Sections 00510, Agreement, and 00800, Supplementary General Conditions. It is expressly understood and agreed by and between the Contractor and the District that the Contract Time for completion of the Work described herein is a reasonable time taking into consideration the general climatic and economic conditions and other factors prevailing in the locality and the nature of the Work. The Contractor is hereby advised that the Contractor's Bid is to be based on the entire Contract Time and the Contractor shall include its field and home office overhead costs in the Bid for the entire Contract Time.

8.03 DELAYS

A. Notice of Delays

1. When the Contractor foresees a delay in the prosecution of the Work and, in any event, immediately upon the occurrence of a delay, the Contractor shall notify the Construction Manager in writing of the probability of the occurrence of the delay, and its cause. The Contractor shall provide this notice no later than five (5) calendar days after the occurrence of such delay, including weather delays as specified herein. The Contractor shall take immediate steps to prevent, if possible the occurrence or continuance of the delay. The Contractor agrees that no claim shall be made for delays which the Construction Manager is not notified of within the time specified herein. Contractor further agrees that Contractor shall not be permitted any additional time for completion of the Work or any additional compensation as a result of delay unless Contractor notifies the Construction Manager of the delay within the time specified herein.

B. Non-Excusable Delays

1. Non-excusable delays in the prosecution of the Work shall include delays which could have been avoided by the exercise of care, prudence, foresight, and diligence on the part of the Contractor or its subcontractors, at any tier level, or suppliers. The Contractor shall receive no compensation or time extension for such delay.

C. Excusable Delays

1. Excusable delays in the prosecution or completion of the Work shall include delays to the Critical Path which result from causes beyond the control of the Contractor and District and which could not have been avoided by the exercise of care, prudence, foresight, and diligence on the part of the Contractor or its subcontractors, at any tier level, or suppliers. The Contractor shall receive no compensation for such delay.

   a. Abnormal Delays- Delays caused by a Force Majeure Event shall be considered as excusable delays insofar as they prevent the Contractor from proceeding with the Work for at least five (5) hours per day toward completion of the current critical activity item(s) on the latest favorably reviewed progress schedule.

   b. Weather Delays- Should inclement weather conditions or the conditions resulting from weather prevent the Contractor from proceeding with seventy five (75) percent of the normal labor and equipment force engaged in the current critical activity item(s), (as shown on the latest CPM Progress

Schedule accepted by the Construction Manager), for a period of at least five (5) hours per day toward completion of such operation or operations, and the crew is dismissed as a result thereof, it shall be a weather delay day. An allowance of ten (10) working days of weather caused delay have been included in the time allowed for completion. These weather days shall be included in the Contractor's schedule as specified in Section 01324-1.08, Weather Day Allowance.

c. Material Critical Supply Shortages- Upon the submission of satisfactory proof to the Construction Manager by the Contractor, Critical Supply Shortage of material may be acceptable as grounds for granting a time extension. See definition of Critical Supply Shortage in Article 1.02, Definitions of Words and Terms. A time extension for shortage of material will not be considered for material ordered or delivered late or whose availability is affected by virtue of the mishandling of procurement. The above provisions apply equally to equipment to be installed in the work.

D. Compensable Delays

1. Compensable delays in the prosecution or completion of the Work shall include delays that occur through no fault of the Contractor or its subcontractors and prevent the Contractor from proceeding with the Work for at least five (5) hours per day toward completion of the current critical activity item(s) on the latest favorably reviewed progress schedule due to the following cause(s):

   a. Delays due solely to the actions and/or inactions of the District.
   b. Delays due to differing Site conditions as defined in Section 00700-9.02.G, Differing Site Conditions.
   c. Delays due to other Contractors employed by the District who interfere with the Contractor's prosecution of the Work as defined above.

E. Concurrent Delays

1. Concurrent delays are those delay periods when the prosecution of the Work is delayed during the same period of time due to causes from a combination of the delays defined in Sections 00700-8.03.B, Non-Excusable Delays, 00700-8.03.C, Excusable Delays, or 00700-8.03.D, Compensable Delays. During such concurrent delay periods, time extensions will be granted in accordance with Section 00700-8.04, Time Extensions; however, the Contractor will be granted a non-compensable time extension, shall not be compensated for its overhead costs as defined in section 00700-8.05, Indirect Overhead and the District shall not assess its actual costs as defined in Section 00700-8.04.A, Non-Excusable Delays.

F. Critical Activity

1. The definition and application of the term "critical activity" and "critical path" as used in Section 8.03, Delays, and 8.04, Time Extensions, is specified in Section 01324, Progress Schedules and Reports.

8.04 TIME EXTENSIONS

A. Non-Excusable Delays

1. The District, at its sole option, may grant an extension of time for milestone or completion dates for non-excusable delays if the District deems it is in its best interest. If the District grants an extension of time for non-excusable delays, the Contractor agrees to pay the District's actual costs, arising from the delay, including charges for engineering, inspection, and administration incurred during the extension, as determined by District.

B. Excusable or Compensable Delays

1. If the Contractor is delayed in the performance of its work as defined in Sections 00700-8.03.C, Excusable Delays, or 00700-8.03.D, Compensable Delays, then milestone and Contract completion dates may be extended by the District for such time that, in the District's and Construction Manager's determination, the Contractor's completion dates will be delayed, provided that the Contractor strictly fulfills the following:

   a. The Contractor shall provide notification, in accordance with Paragraph 00700 8.03.A, Notice of Delays, and submit in writing a request for an extension of time to the Construction Manager stating at a minimum the probable cause of the delay and the number of days being requested. The time extension request shall be submitted in accordance with the requirements of Section 01324, Progress Schedules and Reports.

b. If requested by the Construction Manager, the Contractor shall promptly provide sufficient information to the Construction Manager to assess the cause or effect of the alleged delay, or to determine if other concurrent delays affected the Work.

c. Weather Delays. The Contractor will be granted a non-compensable time extension for weather caused delays, pursuant to Section 00700-8.03.C.1.b, Weather Delays, over and above an allowance as provided for in Section 01324, Progress Schedules and Reports.. No time extensions for weather delays will be granted until the total number of weather days exceeds this allowance. The provisions of paragraphs a. and b. above also apply to Weather Delays. Both the use of the Weather Day allowance and the granting of additional days to the Contract due to weather require an actual impact to the critical path as defined below and in Section 01324, Progress Schedules and Reports.

2. Should the Contractor fail to fulfill any of the foregoing, which are conditions precedent to the right to receive a time extension, the Contractor waives the right to receive a time extension.

3. During such extension of time, neither extra costs incurred by the District for engineering, inspection and administration nor damages for delay will be charged to the Contractor. It is understood and agreed by the Contractor and District that time extensions due to excusable or compensable delays will be granted only if such delays involve an impact to the Critical Path that would prevent completion of the whole Work within the specified Contract time. Attention is directed to Section 01324, Progress Schedules and Reports, regarding the use of float in the Project schedule as related to time extensions.

4. Should the Contractor fail to complete the Work within the time specified in the Contract, as extended in accordance with this Section if applicable, the Contractor shall forfeit and the District may recover liquidated damages in accordance with Section 00700-8.06, Liquidated Damages.

5. Upon Contractor's submittal of satisfactory proof to Construction Manager of a Force Majeure event causing an unavoidable Controlling Operation delay, the delay shall be considered an Excusable Delay. Any claim by Contractor to classify a Force Majeure event as a Compensable Delay shall be handled pursuant to Article 11, Protests, Disputes and Claims. See definition of Force Majeure in Article 1.02, Definitions of Words and Terms.

## 8.05 INDIRECT OVERHEAD

A. The Contractor shall be reimbursed for indirect overhead expenses for periods of time when the Work is delayed as defined in Section 00700-8.03.D, Compensable Delays, only when such delay involves an impact to the Critical Path that would prevent completion of the whole Work within the specified Contract Time. However, no reimbursement for indirect overhead shall be made for compensable delays which occur during a concurrent delay as defined in Section 00700-8.03.E, Concurrent Delays. If it is mutually agreed that the allowable markups provided for in Section 00700-Article 9, Changes in the Work, do not provide equitable compensation for the Contractor's indirect overhead expenses then the adjustments provided for under this Section shall be applied and the change order markups in 00700-Article 9, Changes in the Work, reduced to reflect the compensation provided by this Section. As a condition precedent to any reimbursement, the Contractor must fulfill all conditions as provided in Section 00700-8.02.C Excusable or Compensable Delays. No additional markup for overhead or profit shall be provided for such indirect overhead expenses.

B. Payment to the Contractor for indirect overhead expenses will be made only if the extended Contract period granted for the compensable delay(s) is required to complete the work following the depletion of the original Contract period and any time extensions granted other than compensable time extensions.

C. Indirect Field Overhead

1. For those allowable delay periods as defined in Section 00700-8.05, Indirect Overhead, the Contractor shall be reimbursed for its indirect field overhead based on:

a. Actual invoice costs for on-Site field offices and temporary utilities as described in Section 01500, Temporary Facilities and Controls.

b. Actual labor costs, as determined consistent with Section 00700-9.03.A.1, Direct Field Labor for office staff labor.

c. Fair rental values acceptable to the Construction Manager as described in Section 00700-9.03.A.3, Construction Equipment, for construction equipment idled due to the delay.

D. Indirect Home Office Overhead

1. For those allowable delay periods as defined in Section 00700-8.05, Indirect Overhead, the Contractor shall be reimbursed for its home office overhead based on the following formula:

   a. Total Contract Bid Price ($) divided by the Total Contract Period (Calendar Days) multiplied by 0.03 equals the Daily Indirect Home Office Overhead ($/Calendar Day of Delay)

2. As it is impractical to determine the actual home office overhead, such reimbursement shall encompass full payment for any and all home office overhead expenses for such periods of time for the Contractor and all subcontractors. Distribution of the markup amount among the Contractor and all subcontractors and suppliers is the responsibility of the Contractor. Contractor agrees to indemnify, defend, and hold harmless for any indirect home office overhead claims from its subcontractors.

8.06 LIQUIDATED DAMAGES FOR FAILURE TO MEET COMPLETION DATES

A. The District and the Contractor recognize that time is of the essence of this Agreement and that the District will suffer financial loss if the Work is not completed within the time specified in Sections 00510, Agreement, and 00800, Supplementary General Conditions, and required milestone work in Sections 00510 and 00800, herein, plus any extensions thereof allowed in accordance with Section 00700-8.04, Time Extensions. It is hereby understood and agreed that it is and will be difficult and/or impossible to ascertain and determine the actual damage which the District will sustain in the event of and by reason of the Contractor's failure to fully perform the Work or to fully perform all of its contract obligations that have accrued by the time for completion as specified in Sections 00510 and 00800, herein and/or as specified for completion of any scheduled operations or works described in the Contract Documents. It is, therefore, agreed in accordance with California Government Code §53069.85 that the Contractor will forfeit and pay to the District liquidated damages in the amount set forth in Sections 00510 and 00800, per day for each and every calendar day that expires after the time for completion specified in Sections 00510 and 00800, herein and/or as specified for completion of any scheduled operations or works described in the Contract Documents, except as otherwise provided by extension of time pursuant to Section 00700-8.04, Time Extensions. It is further understood and agreed in accordance with California Government Code §53069.85 that the liquidated damages sum specified in this provision is not manifestly unreasonable under the circumstances existing at the time this Contract was made, and that the District may deduct liquidated damages sums in accordance with this provision from any payments due or that may become due the Contractor.

B. Liquidated damages will continue to accrue at the stated rate until Substantial Completion of the Work. Accrued liquidated damages may be deducted by the District from amounts due or that become due to the Contractor for performance of the Work.

8.07 LIQUIDATED DAMAGES FOR PUBLIC HARDSHIP, NEGATIVE IMPACT, AND DAMAGE TO EXISTING UTLITY MAINS

A. The liquidated damage provision described below is intended to compensate for the public hardship and negative impact resulting from the Contractor's failure to comply with specific construction constraints, which are difficult to quantify despite the definite impact to the District. The assessment of liquidated damages under this provision shall not preclude recovery by the District of other damages subject to reasonable quantification, including consequential damages. The liquidated damages are separate and distinct liability from any other damages that are subject to quantification resulting from such Contractor activities, for which the Contractor also shall remain liable. Consequential and other damages not provided for by this liquidated damages provision may include, but are not limited to, first- and third-party claims for personal injuries and/or property damages, inverse condemnation, environmental claims, or regulatory fees or fines imposed in whole or in part due to Contractor's acts or failures to act.

B. Liquidated damages shall be deducted from the progress payments or from any other monies due to or to become due the Contractor. If the payments due to the Contractor are less than the amount of such liquidated damages, the Contractor or its Surety shall pay the balance to the District.

C. The liquidated damages considered in this Section shall apply to the damages to the District that are difficult to quantify and that are caused by, among other causes, the Contractor's failure to comply with the following requirements:

1. Traffic Control.

2. Work Hours.

3. Site Cleanliness.
4. Public Notification.
5. Vegetation/Survey Monument Protection.
6. Maintenance of Temporary Pavement.
7. Rights-of-Way Restrictions.

D. It is recognized that it is and will be impractical to ascertain and determine the exact amount of damages that the District will suffer as a result of the public hardship or negative impact. The factors relating to the impracticability of ascertaining a monetary value for such hardships or negative impacts include, but are not limited to, the fact that: (i) it is difficult to calculate all actual time spent by District staff, management, consultants, and other agency staff in dealing with the public hardship or negative impact; (ii) such public hardship or negative impact causes inconvenience, anxiety, and frustration to individual members of the general public in subjective ways and in varying degrees of intensity that bear on the District and that are incapable of measurement in precise monetary terms; (iii) the public hardship or negative impact is cumulative with each occurrence. Therefore, the Contractor and the District mutually agree that the amount set forth in Section 00800-1.1, Amount of Liquidated Damages, including the escalation amounts for repeated or protracted occurrences, is reasonable as a liquidated damage amount for each situation creating public hardship or negative impact. This liquidated damage provision is a separate and distinct liability from any other damages that are subject to quantification resulting from such Contractor activities, for which the Contractor also shall remain liable. Quantifiable damages may include, but shall not be limited to, repairs to damaged property, additional right-of-way compensation, or fines. Liquidated damages imposed shall be deducted from the progress payments or from any other monies due or to become due to the Contractor. If the payments due to the Contractor are less than the amount of such liquidated damages and actual damages, the Contractor or its Surety shall pay the balance to the District.

E. The Contractor shall be responsible for the discovery and protection of all existing underground utilities and installations in accordance with the Contract Documents.

F. If the Engineer determines that damage to an existing utility main is due to the Contractor's noncompliance with the Contract Documents, or inadequate effort in discovering or protecting the utility main lines, ducts, or cables (excluding service lines), the Contractor shall be responsible for the quantifiable District expenses and damages, including without limitation consequential damages, time and resources spent by District staff, management, and consultants in dealing with such utility damage and impacts, and any and all costs related to repairs by the utility, resulting from such damage to the utility.

## 8.08 ACCELERATION OF WORK

A. District reserves the right to direct the Contractor to accelerate performance of the Work or any portion of the Work. No action or direction of District other than an express written Order by the District's Authorized Representative to accelerate performance of the Work shall be construed by the Contractor to be direction to accelerate the Work.

B. If the Contractor believes that some action or inaction on the part of District constitutes an acceleration directive, the Contractor must immediately notify the District in writing that the Contractor considers the actions or inaction an acceleration directive. This written notification must detail the circumstances of the acceleration directive. Should the Contractor fail to provide timely written notice of any such acceleration directive prior to accelerating

its performance of the Work, or any portion thereof, the Contractor waives the right to receive additional compensation for any acceleration costs incurred.

C. Contractor must keep Daily cost and other Project records related to the District's acceleration Directive separate from other Project costs and records, and must submit a written Daily record of acceleration cost to District at the end of each Day.

D. Allowable labor costs are limited to overtime or shift premium costs. Allowable equipment costs are only the cost of added equipment mobilized to the Site to accomplish the accelerated Work effort.

8.09 SUSPENSION OF WORK

A. If the Contractor fails to correct defective work as required by Section 00700-7.03, Supply of Sufficient Workers, or fails to carry out the Work in accordance with the Contract Documents or any other applicable rules and regulations, the District, by a written order of the District's representative or signed personally by an agent specifically so empowered by the District, in writing, may order the Contractor to stop the work, in its entirety or any portion thereof. In the event of a suspension of only a portion of the work, the Contractor is obligated to perform the portion of the work not suspended. The Suspension of Work shall remain in effect until the condition or cause for such order has been eliminated. The District's concurrence that the condition or cause has been eliminated will be provided to the Contractor in writing. This right of the District to stop and suspend the Work shall not give rise to any duty on the part of the District to exercise this right for the benefit of the Contractor or any other person or entity. All delays in the Work occasioned by such stoppage shall not relieve the Contractor of any duty to perform the Work or serve to extend the time for its completion. Any and all necessary corrective work done in order to comply with the Contract Documents shall be performed at no cost to the District.

B. In the event that a suspension of Work is ordered, as provided in this paragraph, the Contractor, at its expense, shall perform all work necessary to provide a safe, smooth, and unobstructed passageway through construction for use by public, pedestrian, and vehicular traffic, during the period of such use by suspension. Should the Contractor fail to perform the Work as specified, the District may perform such work and the cost thereof may be deducted from partial payments and/or final payment due the Contractor under the Contract.

C. The District shall also have authority to suspend the Work wholly or in part, for such period as the District may deem necessary, due to unsuitable weather, or to such other conditions as are considered unfavorable for the suitable prosecution of the Work. Such temporary suspension of the Work will be considered justification for time extensions to the Contract in an amount equal to the period of such suspension if such suspended work includes the current critical activity on the latest favorably reviewed progress schedule. The Contractor as directed by the District shall comply with the provisions in Section 00700-8.08, Suspension of Work, above. Such additional work shall be compensated as provided for in Section 00700-Article 9, Changes in the Work.

8.10 DISTRICT'S RIGHT TO TERMINATE CONTRACT

A. Termination for Default

1. If the Contractor refuses or fails to prosecute the Work or any separable part thereof with such diligence as will ensure its completion within the time specified herein, or any authorized extension thereof, or fails to perform the Work in a manner required by the Contract Documents and/or industry standards, or fails to complete such Work within such time as required under the Contract Documents or, if the Contractor should be adjudged as bankrupt, or is otherwise deemed insolvent by the District based on good cause and is unable to proceed with the Work, or if the Contractor should make a general assignment for the benefit of creditors, or if a receiver should be appointed on account of insolvency, or if the Contractor files a petition to take advantage of any debtor's act, or should any Subcontractor materially violate any of the provisions of the Contract Documents, or if the Contractor should persistently or repeatedly refuse or fail, except in cases for which an authorized extension of time is provided, to provide the required project management, supervision, quality control, and/or supply enough properly skilled workers or proper materials to complete the Work in the time specified, or if the Contractor should fail to make prompt payment to Subcontractors for material or labor, or if the Contractor should persistently disregard laws, or instructions given by District, or if the Contractor otherwise substantially fails to fulfill its obligations under the Contract Documents, the District may, without prejudice to any other right or remedy, serve written notice upon the Contractor and Sureties of the District's intention to terminate the Contractor's performance under the Contract Documents. Said notice shall contain the reasons for such intention to terminate the Contractor's performance under the Contract Documents, and unless, within ten (10) days after the service of such notice, such violations cease and/or satisfactory arrangements for the corrections thereof have

been made, the District may terminate Contractor's performance under the Contract Documents and the Contractor shall not be entitled to receive any further payment until the Work is finished. Preliminary notice of any or all of the foregoing may be provided to the Surety by or on behalf of District so as to enable it to investigate the contentions and project status so as to be poised to promptly respond, as required in the performance bond, to a declaration from the District declaring the right of the Contractor to proceed to be terminated due to default. Upon receipt of such notice the Surety on the performance bond shall investigate the contentions raised and keep a record of its investigation in its files for a period of no less than five (5) years following the notice.

2. In the event of any such termination, the District shall serve written notice thereof upon the Surety and Contractor, and the Surety shall have the right to take over and perform the Work. However, if the Surety, within five (5) days after the service of a notice of termination, does not give the District written notice of its intention to take over and perform the Work, the District shall serve a demand upon Surety that it perform its obligations under the Performance Bond. If within ten (10) calendar days after receipt of such demand Surety fails to take over the Work or otherwise perform under the Performance Bond, or if Surety serves such notice of its intent to take over and perform the Work and does not begin performance thereof within fifteen (15) days from the date of serving said notice, the District may take over the Work and prosecute the same to completion by contract or by any other method it may deem advisable for the account and at the expense of the Contractor, and the Sureties and/or Contractor shall be liable to the District for any excess cost or other damage incurred by the District thereby. In such an event, the District may without liability for so doing, take possession of and utilize such materials, tools, equipment, supplies and other property belonging to the Contractor and/or assume assignment of any and all subcontracts for subcontractors and/or suppliers that may be on the worksite and be necessary to complete the Work. For any portion of such Work that District elects to complete by furnishing its own employees, materials, tools, and equipment, the District shall be compensated in accordance with the schedule of compensation for force account work as stated in Section 00700-Article 9, Changes in the Work.

3. If the Surety assumes the Contractor's terminated Work, it shall take the Contractor's place in all respects for that part and shall be paid by District for all Work performed by it in accordance with the terms of the Contract Documents. If the Surety assumes the entire Contract, all money due the Contractor at the time of its default shall be payable to the Surety as the Work progresses, subject to the terms of the Contract Documents.

4. Contractor hereby consents to assigning to the District and/or District's replacement contractor all subcontracts and other agreements of any and all Subcontractors and/or suppliers that may be on the worksite and/or may be necessary to complete the Work in the event of Termination for Default or Termination for Convenience, as set forth below. Contractor agrees to obtain, by way of a subcontract provision, the consent of each and every Subcontractor and/or supplier for such assignment prior to the commencement of each such Subcontractor's and/or supplier's conduct of the Work.

5. In the event of such termination, the Contractor will be paid the actual amount due based on unit prices or lump sums Bid and the quantity of Work completed at the time of termination, less damages caused to the District by acts of the Contractor causing the termination, including but not limited to, all costs to the District arising from professional services and attorneys' fees and all costs generated to insure or bond the work of substituted Contractors or Subcontractors utilized to complete the Work, such excess shall be paid to the Contractor. If such costs exceed the unpaid balance, the Contractor shall pay the difference to the District promptly upon demand. On failure of the Contractor to pay, the Surety shall pay on demand by District. Any portion of such difference not paid by the Contractor or Surety within thirty (30) days following the mailing of a demand for such costs shall earn interest at the maximum rate authorized by California law.

6. The Contractor and the District agree that nothing in this Section is intended to create a right of either party to recover attorney fees as prevailing party in any lawsuit on this Contract.

7. The foregoing provisions are in addition to and not in limitation of any other rights or remedies under law or in equity available to District.

8. If it is later determined by the District that the Contractor had an excusable reason for not performing, such as a fire, flood, or other event which was not the fault of or was beyond the control of the Contractor, the District, after setting up a new performance schedule, may allow the Contractor to continue Work, or treat the termination as a termination for convenience, and the rights and obligations of the parties shall be the same as if the termination had been issued for the convenience of the District. If a Termination for Default

is later determined to be wrongful, unsubstantiated, or otherwise without just cause, such Termination for Default will be automatically converted to, and treated as, a Termination for Convenience, in accordance with Section 00700- 8.10.B.

B. Termination for Convenience

1. The District may terminate the Contractor's performance under the Contract, either in whole or in part, at its own discretion or when conditions encountered during the Work make it impossible or impracticable to proceed, or when the District is prevented from proceeding with the Contract by act of God, by law, or by official action of a public authority, or upon a determination that such termination is in the best interest and convenience of the District, or whenever the District is prohibited from completing the Work for any reason. The District shall provide no less than ten (10) days written notice of its intent to terminate the Contract for convenience, and shall endeavor to provide the Contractor with consultation with the District prior to termination.

2. Upon receipt of such written notice of termination, the Contractor shall:

   a. Stop work as specified in the written notice;

   b. Terminate all orders and Subcontractors except as necessary to complete any portion of the Work that is not terminated;

   c. If directed in writing by the District to do so, assign all right, title and interest in subcontracts and materials in progress, in which case the District will have the right at its discretion to settle, or pay any or all claims arising out of the termination of such subcontractors, but in no event shall recovery by any Contractor include lost profits for uncompleted portions of the Work;

   d. Deliver or otherwise make available to the District all data, drawings, specifications, reports, estimates, summaries and such other information and material as may have been accumulated by the Contractor in performing the Work whether completed or in process;

   e. Settle outstanding liabilities and claims with the approval of District;

   f. Complete performance of such part of the Work as has not been terminated; and

   g. Take such other actions as may be necessary, or as may be directed by the District for the protection and preservation of the Work and/or property related to the Work.

      1) Upon receipt of District's written notice of termination for convenience, and within a period of 30 to 60 days, as determined by the District at the time of termination, the Contractor shall submit to the Construction Manager a Termination Proposal which shall include, but is not limited to, the Contractor's estimated costs to be incurred by the Contractor as a result of the termination for convenience, and as allowed by the Contract Documents, including all documentation to support such costs; the status of the Work at time of termination; the status of termination of the Contractor’s subcontractor(s) and supplier(s) agreement(s) including the amount of each such agreement, amount paid under each agreement up to the date of termination, and the amount that currently remains due and owing under each agreement for Work completed as of the date of termination, if any; a list, certified as to quantity and quality, of termination inventory not previously disposed of, excluding items authorized for disposition by the Construction Manager; and any other information and/or documentation as required by District.

      2) Upon receipt of District's written notice of termination for convenience, the Contractor shall submit to the Construction Manager a request for final payment in accordance with the requirements of the Contract. Such request shall be submitted promptly, but no later than sixty (60) days from the effective date of the termination for convenience.

      3) The final payment to the Contractor after termination for convenience shall be limited to amounts due and owing under the Contract at time of termination, including the following:

         a) Any actual costs incurred by the Contractor for restocking charges;

         b) The agreed upon price of protecting the Work in any manner, if any, as directed by the District;

         c) The cost of settling and paying claims arising out of the termination of the Work under subcontract agreements or orders with the District's approval, as specified above, exclusive of the amounts paid or payable on account of goods delivered or work furnished by a subcontractor prior to the effective date of the termination; and

d) The contract price allocable to the portion of the Work properly performed or goods supplied by the Contractor as of the date of termination, as determined in accordance with the Contract Documents, reduced by any sums previously paid to the Contractor.

3. The District shall have the right to withhold any portion or the whole of the final payment under this provision in the event there are any outstanding Claims for compensation asserted by the District against the Contractor, or by any third party against the District which arises out of the Contractor's work.

8.11 CONTRACTOR'S RIGHT TO TERMINATE

A. Upon ten (10) days written notice to the District, the Contractor may terminate this Agreement for any of the following reasons:

1. If the Work has been stopped for a one hundred and eighty (180) consecutive day period due to:
   a. A court order or order of other governmental authorities having jurisdiction; or
   b. As a result of the declaration of a national emergency or other governmental act during which, through no act or fault of the Contractor, materials are not available; or
   c. The District's failure to pay the Contractor in accordance with the Contract Documents; or
2. If the Work is suspended by the District, without cause attributable to the wrongful acts of Contractor, for one hundred and eighty (180) consecutive days.

B. The Contractor's exclusive remedy in the event of termination under Section 8.10, Contractor's Right to Terminate, shall be to recover from District payment on the same terms as provided in Section 8.09.B, Termination for Convenience, resulting from a properly noticed termination for the specific reasons allowed for in this Section 8.10, Contractor's Right to Stop Work or Terminate.

C. The provisions of this Section 8.10, Contractor's Right to Stop Work or Terminate, are not intended to preclude Contractor from making a Claim as provided for in the Contract Documents for an adjustment in Contract Price or Contract Times or otherwise for expenses or damage directly attributable to Contractor's stopping the Work as permitted by this Section 8.10, Contractor's Right to Stop Work or Terminate.

****END ARTICLE 8****

## ARTICLE 9 - CHANGES IN THE WORK

9.01 GENERAL

A. District may at any time, without notice to the Sureties, by written Order, make changes in the Work within the general scope of the Contract, including but not limited to additions, deletions or other revisions, changes in the Contract Documents and in the method and manner of performing the Work. Such changes will be ordered in one or more of the following ways.

1. **Field Directive**: A Field Directive (FD) is used for providing written direction to the Contractor to perform work which: a) directs the Contractor to proceed with work that the Construction Manager has not recognized as extra work, b) directs the Contractor to proceed with work that the Construction Manager has determined is extra work but costs have not been determined or are difficult to determine by the Construction Manager; or by
2. **Field Order**: A written instruction given to the Contractor authorizing work that is a change to the scope of work carried out on a time and material basis or a lump sum cost agreed to between District and Contractor; or by
3. **Change Order**: A document, which is signed as recommended by the Construction Manager, accepted by the Contractor, and accepted by an authorized representative of the District, which authorizes an addition, deletion, or revision in the Work or an adjustment in the Contract Price or the Contract Time, issued on or after the Effective Date of the Agreement. A Change Order may be a bi-lateral Change Order signed by both the District and Contractor or the Change Order may be a Unilateral Change Order signed only by the District.

B. Any change in scope of Work or deviation from Contract Documents including, without limitation, extra Work, or alterations or additions to or deductions from the original Work, shall not invalidate the original Contract, and shall be performed under the terms of the Contract Documents. The difference in cost of the work affected by such change will be added to or deducted from the amount of said Contract price, as the case may be, by a fair and reasonable valuation, as outlined in this Section.

C. The prices agreed upon and any agreed upon adjustment in Contract Time shall be incorporated in the written order issued by the District, which shall be written so as to indicate an acceptance on the part of the Contractor as evidenced by its signature. By signature of the Change Order, the Contractor acknowledges that the adjustments to cost and time contained in the Change Order are in full satisfaction and accord, payment in full, and so waives any right to claim any further cost and time impacts at any time during and after completion of the Contract for the changes encompassed by the Change Order.

D. Only Contractor or District may initiate changes in scope of Work or deviation from Contract Documents.

E. Timeline: Within fifteen (15) Days of receipt of a request for a proposed Change Order (PCO) from the District, Contractor must submit in a format acceptable to the District, four (4) copies of Contractor's proposed cost and time estimates detailing the amount to be added to or deducted from the Contract Sum and Contract Time due to the proposed change. The Contractor's proposal must include:

1. Detailed estimates and other documentation supporting the proposed cost; and
2. Proposed adjustments of the Contract Time that is known by the Contractor to be directly or indirectly attributable to the proposed Change Order. All requests for adjustment to the Contract Time must be supported by a detailed schedule analysis as specified in Section 01324, Progress Schedule and Reports.

F. Failure to submit cost and time estimate: If Contractor fails to submit the required information and documentation within the 15-Day time limit, District has the right to issue a Unilateral Change Order. The Contract Sum and Contract Time will be changed in accordance with the District's estimate of cost and time, unless, within fifteen (15) Days following completion of the added Work or with written notice to delete the Work, the Contractor submits to the District written proof that the District's estimate is in error.

G. If, after the Contractor has submitted their cost and time proposal, the District and the Contractor fail to successfully negotiate and agree on a time and/or cost for the proposed Change Order, the District may issue a Unilateral Change Order to the Contractor and the Contractor must proceed with the changed Work. If the Contractor disputes any portion of the unilateral Change Order, the Contractor must maintain time and materials records as specified in Section 00700-9.02.D, Field Order- Force Account Work. If the Contractor fails to

maintain such records or fails to submit such records within fifteen (15) Days following completion of the added Work, District's estimate will be used for the purpose of final adjustment in Contract Time and Contract Sum.

H. Adjustment of the Contract Sum and/or Contract Time will be determined in accordance with Section 00700- Article 9, Changes in the Work.

I. Contractor's failure to provide a complete and timely notice of change/delay and/or Change Order request, or to comply with any other requirement of this Article, shall constitute a waiver by Contractor of the right to a contract adjustment on account of such circumstances and a waiver of any right to further recourse or recovery by reason of or related to such change by means of the claims dispute resolution process or by any other legal process otherwise provided for under applicable laws.

J. See Section 01999, Referenced Forms, for forms related to Article 9.

9.02 CONTRACT MODIFICATION PROCEDURES AND TIMELINES

A. Field Directive:

1. The Contractor may be issued a Field Directive.
2. If Contractor is satisfied with Field Directive and does not request change in Contract Sum or Contract Time, then Field Directive shall be executed without a Change Order.
3. If Contractor believes the Field Directive results in a change to Contract Sum or Contract Time, then Contractor must notify the Construction Manager with seven (7) days following receipt of Field Directive. Contractor shall proceed with executing work described in the Field Directive regardless of time or cost impacts, which are to be evaluated subsequent to or concurrently with field directive work. A proposed change order may be issued for the District's consideration for any resulting time or cost impacts which are outside of the project scope of work. The Contractor shall within fifteen (15) days from the date of notification provide detailed justification and analysis as well as complete pricing and schedule CPM fragmentary network to support any request for time extension.
4. Should the Contractor proceed with the work affected before receipt of a response from the Construction Manager, any portion of the work which is not done in accordance with the District's interpretation, clarifications, instructions, or decisions subject to removal or replacement and the Contractor shall be responsible for all losses.
5. If the parties are unable to agree on the Field Directive's impact to the Contract Sum or Contract Time, then Contractor may file a Claim in accordance with Section 00700- Article 11, Protests, Disputes and Claims.

B. Request for Proposal (RFP) for a Potential Change Order (PCO)

1. A request for a proposed cost made to the Contractor by the District to add, delete or change the Work. RFP's shall not be deemed to be directions to proceed with any addition, deletion or change to the Work.
2. Whenever Contractor is required to prepare a Cost Proposal, and whenever Contractor is entitled to submit a Cost Proposal and elects to do so, Contractor shall prepare and submit to District for consideration. All Cost Proposals must contain a complete breakdown of costs of credits, deducts, and extras; and itemizing materials, labor, equipment, special services, taxes, overhead and profit. All Subcontractor Work shall be so indicated. Individual entries on the Cost Proposal form shall follow the cost items defined in Cost Determination in this Section. The Contractor shall provide all required information requested in the RFP no later than fourteen (14) days after receiving the RFP.
3. Upon receipt of a Cost Proposal with a detailed breakdown as prescribed herein this Section, the Construction Manager will act promptly thereon. If Construction Manager accepts a Cost Proposal, Construction Manager will prepare Change Order for District and Contractor signatures. If Cost Proposal is not acceptable to Construction Manager because it does not agree with cost and/or time included in Cost Proposal, Construction Manager will submit in a response what it believes to be a reasonable cost and/or adjustment, if any. Except as otherwise provided in this Section, Contractor shall have seven (7) days in which to respond to Construction Manager with a revised Cost Proposal.

4. If the parties do not agree on the price or time for an RFP, District may either issue a unilateral change order pursuant to Section 00700-9.02.C, Unilateral Change Orders, as defined below. Contractor shall perform the changed Work notwithstanding any claims or disagreements of any nature.
5. When necessity to proceed with a change does not allow the Construction Manager sufficient time to conduct a proper check of a Cost Proposal (or revised Cost Proposal), Construction Manager may order Contractor to proceed on basis to be determined at earliest practical date. In this event, value of change, with corresponding equitable adjustment to Contract, shall not be more than increase or less than decrease proposed.

C. Unilateral Change Orders:

1. If at any time District believes in good faith that a timely Bilateral Change Order will not be agreed upon using the procedures in this Article, District may issue a Unilateral Change Order with its recommended cost and/or time adjustment. Upon receipt of the Unilateral Change Order, the Contractor shall promptly proceed with the change of Work involved and concurrently respond to District's Unilateral Change Order within ten (10) calendar days.
2. Contractor's response must be any one of following:
   a. Return Unilateral Change Order signed, thereby accepting District's response, time, and cost.
   b. Submit a (revised if applicable) Cost Proposal with supporting documentation (if applicable, reference original Cost Proposal number followed by letter A, B, etc. for each revision), if District so requests.
   c. Give notice of intent to submit a Claim as described in Section 00700-11.03, Notice of Potential Claim.
3. If the Unilateral Change Order provides for an adjustment to the Contract Sum, the adjustment shall be based on one of the following methods:
   a. Mutual acceptance of a lump sum properly itemized and supported by sufficient substantiating data to permit evaluation.
   b. Unit prices stated in the Contract Documents or subsequently agreed upon.
   c. Cost to be determined in a manner agreed by the District and Contractor.
4. A Unilateral Change Order signed by Contractor indicates the agreement of Contractor therewith, including adjustment in Contract Sum and Contract Time or the method for determining them. Such agreement shall be effective immediately and shall be recorded as a Change Order.
5. If Contractor does not respond promptly or disagrees with the method for adjustment in the Contract Sum, the method and the adjustment shall be determined by Construction Manager on the basis of reasonable expenditures and savings of those performing the Work attributable to the change including, in case of an increase in the Contract Sum, an allowance for overhead and profit in accordance with 00700-9.03.B, Mark-Up Allowances. If the parties still do not agree on the price for a Unilateral Change Order, Contractor may file a Claim in accordance with Section 00700-Article 11, Protests, Disputes and Claims. Contractor shall keep and present, in such form as Construction Manager may prescribe, an itemized accounting together with appropriate supporting data. Unless otherwise provided in the Contract Documents, costs for the purposes of this paragraph shall be limited to those provided in Section 00700-9.03, Cost Determination.
6. Pending final determination of cost to District, amounts not in dispute may be included in Applications for Payment.

D. Field Order- Force Account Work

1. If either the amount of work or payment for a Change Order cannot be determined or agreed upon beforehand, the District may direct by written Change Order or Field Order that the work be done on a force account basis. The term "force account" shall be understood to mean that payment for the work will be done on a time and expense basis, that is, on an accounting of the Contractor's forces, materials, equipment, and other items of cost as required and used to do the work. For the work performed, payment will be made for the documented actual cost of the work as described in Section 00700-9.03, Cost Determination.
2. Prior to the commencement of force account work, the Contractor shall notify the Construction Manager of its intent to begin work. Labor, equipment and materials furnished on force account work shall be recorded daily by the Contractor using a District supplied form or equivalent form approved by the

Construction Manager. The reports, if found to be correct, shall be signed by both the Contractor and Construction Manager, or inspector, and a copy of which shall be furnished to the Construction Manager no later than the working day following the performance of said work. The Daily Extra Work Report sheet shall thereafter be considered the true record of force account work provided. If the Construction Manager, or inspector, do not agree with the labor, equipment and/or materials listed on the Contractor's daily force account report, the Contractor and Construction Manager, or inspector, shall sign-off on the items on which they are in agreement. The Construction Manager shall then review the items of disagreement and will advise the Contractor, in writing, of its determination. If the Contractor disagrees with this determination, it shall have the right to file a claim notice as provided in Section 00700- Article 11, Protests, Disputes and Claims.

3. The Contractor shall maintain its records in such a manner as to provide a clear distinction between the direct costs of work paid for on a force account basis and the costs of other operations.
4. To receive partial payments and final payment for force account work, the Contractor shall submit, in a manner approved by the Construction Manager, detailed and complete documented verification of the Contractor's and any of its subcontractor's actual costs involved in the force account pursuant to the pertinent Change Order or Field Order. Such costs shall be submitted within thirty (30) days after said work has been performed. No payments will be made for work billed and submitted to the Construction Manager after the thirty (30) day period has expired.
5. The force account invoice shall itemize the materials used and shall cover the direct costs of labor and the charges for equipment rental, whether furnished by the Contractor, subcontractor, or other forces. The invoice shall be in a form acceptable to the Construction Manager and shall provide names or identifications and classifications of workers, the hourly rate of pay and hours worked, and also the size, type, and identification number of equipment and hours operated. Material charges shall be substantiated by vendor's invoices acceptable to the Construction Manager.

E. Unit Price Work

1. Contractor must include in each unit price an amount considered by Contractor to be adequate to cover all Contractor’s costs plus overhead and profit for each separately identified unit price item.
2. If there is any variance of less that twenty-five percent (25%) between the District’s estimated number of units of Work stated on the Section 00400, Bid Form, Bid Schedule and the actual number of units of authorized Work performed, there shall not be an adjustment of unit prices by reason of overruns or underruns; each unit of authorized Work performed will be paid for at the Contract unit price for that item of Work.
3. If the final quantity of any item of authorized Work varies from the District’s estimated quantity for that item of Work by twenty-five percent (25%) or more, the unit price for that item of work will be adjusted by Change Order.
4. All changes in Contract Sum and Contract Time due to quantity variations in unit price Work accepted by District's Authorized Representative are subject to approval by the District Engineer upon completion of the Contract by approval of a final balancing Change Order.
5. See Section 00700-9.04, Increased or Decreased Quantities for further Unit Price requirements.

F. Deleted Work

1. When Work is deleted, the District is entitled to a credit for the deleted Work.
2. The adjustment to the Contract Sum for deleted Work will be computed in accordance with Section 00700-9.02, Contract Modification Procedures and Timelines.
3. If Contractor has ordered acceptable material for the deleted Work before the date of notification of such deletion by District, and if orders for such material cannot be canceled, such material will be paid for by District at Contractor’s actual cost. In such case, the material paid for will become District’s property and District will pay the actual cost of any further handling. If the material is returnable to the vendor and if District so Directs, Contractor must return the material and District will pay the actual costs of returning the material, including reasonable and verifiable handling and restocking charges. The actual costs or charges to be paid by District to Contractor for deleted materials as provided in this paragraph will be computed in the same manner as if the Work were to be paid for on a Force Account basis as provided in Section

00700-9.02.D, Field Order-Force Account Work with a mark-up for deleted work as provided in Section 00700-9.03.B.4.

G. Differing Site Conditions

1. Contractor must immediately, and in any event no later than twenty-four (24) hours after discovery, and before such conditions are disturbed, notify District in writing of:
   a. Material that the Contractor believes may be material that is hazardous waste, as defined in section 25117 of the Health and Safety Code, that is required to be removed to a Class I, Class II, or Class III disposal site in accordance with provisions of existing law
   b. Subsurface or latent physical conditions at the Project Site which Contractor asserts differ materially from those indicated in the Contract Documents; or
   c. Unknown physical conditions at the Project Site, of an unusual nature, which Contractor asserts differ materially from those ordinarily encountered and generally recognized as inherent in work of the character provided for in this Contract.
2. District will promptly investigate the conditions. If District finds that such conditions do materially differ, or do involve hazardous waste, and cause an increase or decrease in the Contractor's cost of, or the time required for, performance of any part of the Work pursuant to this Contract, whether or not changed as a result of such conditions, an equitable adjustment will be made in accordance with Section 00700- Article 9, Changes in the Work.
3. Contractor shall submit Notices of Hazardous Waste Conditions to resolve problems regarding hazardous materials encountered in the execution of the Work pursuant to Section 00700-9.02.G, Differing Site Conditions, which shall govern.
4. Contractor has no right to an adjustment in Contract Sum or Contract Time pursuant to this Section 00700- 9.02.G, Differing Site Conditions, unless Contractor submitted the notice required in Section 00700-8.03.A, Notice of Delays, except that District may extend the notification time upon Contractor's written request in order to obtain additional relevant information.
5. In the event that a dispute arises between the District and the Contractor as to whether the conditions materially differ, or involve hazardous waste, or cause a decrease or increase in the Contractor's cost of, or time required for, performance of any part of the Work, the Contractor shall not be excused from any scheduled completion date provided for by the Contract, but shall proceed with all Work to be performed under the Contract. Contractor shall retain any and all rights provided either by contract or by law which pertain to the resolution of disputes and protests between the parties.
6. Contractor has no right to an adjustment in Contract Time or Contract Sum after accepting Final Payment pursuant to this Contract.

H. Contractor Cost Reduction Proposals: See 00700-9.08, Cost Reduction Incentive, below for procedures on Cost Reduction Proposals, also known as Value Engineering Proposals.

I. All Changes

1. Upon request of the Construction Manager, the Contractor shall provide the following information to support the request for change in cost:
   a. Copy of original quotations, purchase order or invoices to verify costs included in original bid.
   b. Copy of all quotations, purchase order or actual invoices to support new costs submitted.
   c. Copy of all subcontracts.
   d. Copy of all employee time records and wage rates paid.
   e. Copy of all insurance and bond costs resulting from change.
   f. Copy of all quantity takeoff sheets for materials, labor and equipment.
   g. Certified payroll records.
   h. Certified composite wage rate statements including employees' base rate and Contractor's contributions for fringe benefits, subsistence and travel.
   i. A list of equipment with manufacturer's name and model number and the alphanumeric designation used in the Equipment Rental Rates prepared by the California Department of Transportation.

j. Invoices for all rental equipment.

k. Other information, as required, to document the labor, equipment and materials used.

2. 0700-9.05, Cost Pricing Data and Access to Records, provides expanded Contractor requirements regarding providing access to cost pricing data and related change records.

3. Correlation of Other Items:

a. Contractor shall revise Schedule of Values and Application for Payment forms to record each authorized Change Order, Unilateral Change Order, or Field Order as a separate line item and adjust the Contract Sum as shown thereon prior to the next monthly pay period.

b. Contractor shall revise the Progress Schedules prior to the next monthly pay period to reflect the effects of all authorized Change Order, Unilateral Change Order, or Field Order.

c. Contractor shall enter changes in Project Record Documents prior to the next monthly pay period.

9.03 COST DETERMINATION

A. Direct Cost Categories: The categories described below are defined to be direct costs. No other type of costs will be allowable as a direct cost. Direct costs shall not include any labor costs or indirect costs pertaining to the Contractor's and subcontractor's managers or superintendents, their office and engineering staffs, the cost of their offices, facilities, vehicles, or anyone not directly employed on such work, nor small tools (as defined in item C below) and supplies. All such items are considered indirect costs which form a part of the Contractor's and subcontractors' overhead expenses. The District reserves the right to furnish such labor, materials and equipment as it deems expedient, and the Contractor shall have no claim for profit or added fees on the cost of such items.

1. Direct Field Labor:

a. The cost of labor for workers (including forepersons when authorized by the Construction Manager) used in actual and direct performance of the work by the Contractor will be the sum of the following:

1) The actual wages paid plus any employer payments to, or on behalf of workers for fringe benefits including health and welfare, pension, vacation and similar purposes.

2) All payments imposed by State and Federal Laws including, but not limited to, workers' compensation insurance, and social security payments. The rates used for workers' compensation insurance shall be actual rates paid by the Contractor for each specific craft and broken down by wage rate if applicable to that craft.

3) Liability insurance burden applied to Contractor's payroll. Contractor shall provide adequate backup information to Construction Manager to verify this burden rate is indicative of the actual rates paid by the Contractor as a percent of labor.

b. Except as otherwise may be agreed to in writing by the Construction Manager, the actual wages and benefits paid for manual classifications of Contractor's on-site workers will not, in the aggregate, be more than the current applicable wage for each classification as established by the State of California Director of Industrial Relations.

c. Specifically prohibited from the labor costs are other payroll burden factors such as small tools (as defined in item C below), bonuses of any kind and safety incentives.

d. Contractor shall include the actual travel and/or subsistence costs, if any, as a separate line item under the labor cost category. Except as otherwise may be agreed to in writing by the Construction Manager, the actual travel and/or subsistence costs will not be more than established in an applicable Master Labor Agreement or the State of California Director of Industrial Relations.

e. Within fifteen (15) days following Notice to Proceed date, the Contractor shall submit to Construction Manager for approval a breakdown of labor costs as allowed herein for each expected craft used in the Work showing straight time and overtime rates. These rates would be good during defined period for each craft until wages are changed by the either Union Master Labor Agreements, if Contractor is signatory, or the Department of Industrial Relations.

f. Contractor shall revise Schedule of Values and Application for Payment forms to record each authorized Change Order, Unilateral Change Order, or Field Order as a separate line item and adjust the Contract Sum as shown thereon prior to the next monthly pay period.

g. Contractor shall revise the Progress Schedules prior to the next monthly pay period to reflect the effects of all authorized Change Order, Unilateral Change Order, or Field Order.

h. Contractor shall enter changes in Project Record Documents prior to the next monthly pay period.

2. Materials

a. The cost of all materials, including all factory testing, freight and delivery costs of materials, accepted by the District and used in performing the work will be the cost to the Contractor from the supplier thereof. All discounts for early payment shall accrue to the Contractor unless the District's payment to Contractor is paid to Contractor before discount payment is due in which case discount savings will be fully credited to District on next progress billing. All rebates and all returns from the sale of surplus materials shall be credited to the Cost of the Work.

b. For materials used in construction of the Project which may have additional uses on other projects for the Contractor's benefit, such as dimensional lumber, beams and plywood to form concrete or temporary diversion pipes, the Contractor shall submit a material unit cost to cover use of these types of materials for the approval of the District prior to delivery to the Work Site. This unit cost shall take into account the use of such materials on other past and future projects.

3. Construction Equipment

a. The cost of construction machinery and equipment for changes shall be based on fair rental cost or equivalent rental cost of owned equipment. Such costs will be allowed for only those days or hours during which the equipment is in actual use. Payment shall be based on actual rental and transportation invoices but shall not exceed the rental rates listed for such equipment in the State of California Department of Transportation publication entitled "Labor Surcharge and Equipment Rental Rates" which is in effect on the date upon which the work is performed.

b. District-operated equipment rates shall not exceed the rates in the aforesaid Rental Rate publication plus the labor costs as provided in Section 00700-9.03.A.1, Direct Field Labor. The rental cost allowed for equipment will, in all cases, be understood to cover all fuel, supplies, repairs, ownership, and incidental costs and no further allowances will be made for those items, unless specific written agreement to that effect is made. Compensation for idle time of equipment through delays caused by the District will be made consistent with Section 8-1.09, Right of Way Delays, of the Caltrans Standard Specifications.

c. Individual items of construction equipment or small tools which have a replacement value of $500 or less shall not be charged to the Change Order work unless it can be demonstrated that the particular item is needed solely for the completion of the Change Order work.

d. Within fifteen (15) days following Notice to Proceed date, the Contractor shall submit to Construction Manager for approval a list of hourly rates for equipment owned by the Contractor and expected to be used in the Work.

4. Special Services

a. When the Construction Manager and the Contractor, by agreement, determine that special service or item of extra Work cannot be performed by forces of the Contractor or those of any Subcontractors, service or extra Work item may be performed by a specialist. These types of services will be paid based on an agreed upon current market rate.

B. Mark-up Allowances: The Contractor and subcontractors shall be entitled to compensation for indirect field and home office overhead costs, and profit for Change Order work. This compensation shall be in the form of markup percentages applied to the direct cost of the Change Order work, as further described below. The maximum markup which will be allowed for the Contractor's combined overhead and profit will be:

1. For work by its own organization, the Contractor may add up to the following percentages:

| Direct Cost Category | All Work except by Force Account | All Force Account Work |
|---|---|---|
| Direct Field Labor | 25% | 20% |
| Materials | 10% | 10% |
| Construction Equipment | 15% | 10% |
| Special Services | 5% | 5% |

2. For all such work performed by subcontractors, such subcontractor may add the same percentages as the Contractor as listed in .1 above to its actual net increase in costs for combined overhead and profit. The Contractor may add up to five percent (5%) of the subcontractor's total for its combined overhead and profit. No further compensation will be allowed for the Contractor's administration of the work performed by the subcontractor.
3. For all such work done by subtier-subcontractors, such sub-subcontractors may add the same percentages as the Contractor as listed in .1 above to its actual net increase in costs for combined overhead and profit. The subcontractor may then add up to five percent (5%) of the sub-subcontractor's total for its combined overhead and profit. The Contractor may add up to five percent (5%) of the subcontractor's total for its combined overhead and profit. No further compensation will be allowed for the subcontractors' and Contractor's administration of the work performed by the subtier-subcontractor. No additional mark-ups will be allowed for further tiered subcontracts.
4. For Deleted Work: When work is deleted, the District is entitled to a credit for the deleted work. The credit must include direct labor, materials, equipment, and special services as defined above plus overhead and profit of the Contractor and Subcontractor, as applicable to deleted Work. Deleted overhead and profit shall be computed as five present (5%) of the direct labor, materials, equipment, and special services as defined above. For example, if a $10,000 direct cost item of Work is deleted, the credit to the District would be $10,500. The Contractor shall not be entitled to nor claim for anticipated profits on work that may be deleted.
5. For combinations of Added and Delete Work: The costs before markups of added and deleted Work must be separately estimated. If the difference between such costs results in an increase, the markups for added Work will be applied to such difference. If the difference in such costs results in a decrease, the markups for deleted Work will be applied to such difference.
6. To the total of the actual costs and fees allowed herein for both Added and Deleted work, not more than two and one half percent (2.5%) shall be added for additional bond and builder’s risk insurance. The compensable percentage for additional bonds and insurance shall be based on the Contractor's actual costs, as substantiated through documentation submitted to the Construction Manager.
7. The added fixed fees shall be considered to be full compensation, covering the cost of general supervision, overhead, profit, small tools, incidentals and any other general expenses. The above fixed fees represent the maximum limits which will be allowed, and they include but are not limited to the Contractor's and all subcontractors' indirect field and home office expenses and all other costs for cost proposal preparation, schedule analysis and preparation, operation and maintenance manual documentation, and record documents and change order administration.

9.04 INCREASED OR DECREASED QUANTITIES

A. General:

1. Increases or decreases in the quantity of a Contract unit price bid item of work will be determined by comparing the total pay quantity of such item of work with the Bid Schedule quantity.
2. If the total pay quantity of any item of work required under the Contract varies from the Section 00400, Bid Form, Bid Schedule quantity by twenty-five percent (25%) or less, payment will be made for the quantity of work of said item performed at the Contract unit prices therefor, unless eligible for adjustment pursuant to Section 9.04, Increased or Decreased Quantities.
3. If the total pay quantity of any item of work required under the Contract varies from the Bid Schedule quantity by more than twenty-five percent (25%), in the absence of an executed Contract change order specifying the compensation to be paid, the compensation payable to the Contractor will be determined in accordance with 9.04.E, Changes in the Character of the Work..

B. Increases of More Than 25 Percent:

1. Should the total pay quantity of any item of work required under the Contract exceed the Bid Schedule quantity by more than twenty-five percent (25%), the work in excess of 125 percent of the Bid Schedule quantity will be paid for by adjusting the Contract unit price, as hereinafter provided. At the option of the Contraction Manager, payment for the work involved in such excess will be made on the basis of force account as provided by Section 00700-9.02.D, Field Order-Force Account Work.

2. Such adjustment of the Contract unit price will be the difference between the Contract unit prices and the actual unit costs, which will be determined as hereinafter provided, of the total pay quantity of the item. If the costs applicable to such item of work include fixed costs, such fixed costs will be deemed to have been recovered by the Contractor by the payments made for 125 percent of the Bid Schedule quantity for such item, and in computing the actual unit cost, such fixed costs will be excluded. Subject to the above provisions, such actual unit cost will be determined by the Construction Manager in the same manner as if the work were to be paid for on a force account basis as provided in Section 00700-9.02.D, Field Order-Force Account Work, or such adjustment will be as agreed to by the Contractor and the Construction Manager.
3. When the compensation payable for the number of units of an item of work performed in excess of 125 percent of the Bid Schedule quantity is less than $5,000 at the applicable Contract unit price, the Construction Manager reserves the right to make no adjustment in said price if it so elects, except that an adjustment will be further considered if requested in writing by the Contractor.

C. Decreases of More Than 25 Percent:

1. Should the total pay quantity of any item of work required under the Contract be less than seventy-five percent (75%) of the Bid Schedule quantity, an adjustment in compensation pursuant to this Section will not be made unless the Contractor so requests in writing. If the Contractor so requests, the revised quantity will be paid for by adjusting the Contract unit price as hereinafter provided. At the option of the Construction Manager, payment for the quantity of the work of such item performed will be made on the basis of force account as provided in Section 00700-9.02.D, Field Order-Force Account Work. However, in no case shall the payment for such work be less than that which would be made at the Contract unit price.
2. Such adjustment of the Contract unit price will be the difference between the Contract unit price and the actual unit cost of the total pay quantity of the item, including fixed costs. Such actual unit cost will be determined by the Construction Manager in the same manner as if the work were to be paid for on a force account basis as provided in Section 00700-9.02.D, Field Order-Force Account Work; or such adjustment will be as agreed to by the Contractor and the Construction Manager.
3. The payment for the total pay quantity of such item of work will in no case exceed the payment which would have been made for the performance of seventy-five percent (75%) of the Bid Schedule of the quantity for such item at the original Contract unit price.

D. Eliminated Items Covered by Unit Prices:

1. In the event that a part of the Work is to be eliminated in its entirety and such Work is covered by unit price(s) contained in the Bid and/or Contract Documents, the price of the eliminated Work item shall be based on the applicable unit price(s). The unit price includes compensation for all Contractor’s field and home office overhead costs and no further mark-ups will be allowed.
2. Should any Contract item of the Work be eliminated in its entirety, in the absence of an executed Contract change order covering such elimination, payment will be made to the Contractor for actual costs incurred in connection with such eliminated Contract item if incurred prior to the date of notification in writing by the Construction Manager of such elimination.
3. If acceptable material is ordered by the Contractor for the eliminated item prior to the date of notification of such elimination by the Construction Manager, and if orders for such material cannot be canceled, it will be paid for at the actual cost. In such case, the material paid for shall become the property of the District and the actual cost of any further handling will be paid for. If the material is returnable to the vendor and if the Construction Manager so directs, the material shall be returned and the Contractor will be paid for the actual costs of charges made by the vendor for returning the material. The actual cost of handling returned material will be paid for by the District. In addition for payment for actual material and handling charges, the Contractor shall be paid five percent (5%) for the eliminated Work item in consideration of the applicable Contractor's overhead costs.

E. Changes in Character of Work:

1. If an ordered change in the Plans and Specifications materially changes the character of work of a Contract unit price bid item from that on which the Contractor based its Bid price, and if the change increases or decreases the actual unit cost of such changed item as compared to the actual or estimated actual unit cost of performing the work of said item in accordance with the Plans and Specifications originally

applicable thereto, in the absence of an executed Contract change order specifying the compensation payable, an adjustment in compensation therefor will be made in accordance with the following:

2. The basis of such adjustment in compensation will be the difference between the actual unit cost to perform the work of said item or portion thereof involved in the change as originally planned and the actual unit cost of performing the work of said item or portion thereof involved in the change, as changed. Actual unit costs will be determined by the Construction Manager in the same manner as if the work were to be paid for on a force account basis as provided in Section 00700-9.02.D, Field Order-Force Account Work; or such adjustment will be agreed to by the Contractor and the Construction Manager. Any such adjustment will apply only to the portion of the work of said item actually changed in character. At the option of the Construction Manager, the work of said item or portion of item which is changed in character will be paid for by force account as provided in Section 00700-9.02.D, Field Order-Force Account Work.

3. If the compensation for an item of work is adjusted under this Section, the costs recognized in determining such adjustment shall be excluded from consideration in making an adjustment for such item of work under the provisions in this Section 9.04.B, Increases of More Than 25 Percent, and 9.04.C, Decreases of More Than 25 Percent.

9.05 COST PRICING DATA AND ACCESS TO RECORDS

A. All cost and pricing data submitted by the Contractor with respect to any change, prospective or executed, or any claim for extra compensation shall be a true, complete, accurate and current representation of actual cost and pricing of the work. The Construction Manager may require a formal certification as to cost and pricing data submitted by the Contractor.

B. The Construction Manager shall have access, upon reasonable notice during normal business hours, to any books, documents, accounting records, papers, project correspondence, project files, scheduling information and other relevant records of the Contractor and all subcontractors directly or indirectly pertinent to the work, original as well as changes and claimed extra work, and the Contract for the purpose of making audit, examination, excerpts and transcriptions and in order to verify or evaluate any change, prospective or executed, or any claim for which compensation has been requested or notice of potential claim has been tendered.

C. Such books, documents, and other records mentioned above shall include, but are not limited to all those reasonably necessary to determine the accurate amount of direct and indirect costs, job Site, and delay and impact costs, however characterized, and shall include the original Bid and all documents related to the Bid and its preparation, as well as, the as-planned construction schedule and all related documents.

D. Such access shall include the right to examine and audit such records and make excerpts, transcriptions, and photocopies at the District's cost.

9.06 TIME EXTENSIONS FOR CHANGE ORDERS

A. If the Contractor requests a time extension for the extra work necessitated by a proposed Change Order, the request must comply with the applicable requirements of this Section 00700 and Section 01324, Progress Schedule and Reports.

9.07 CONTRACTOR’S ACCEPTANCE OF CHANGE ORDERS

A. Contractor’s written acceptance of a Change Order constitutes final and binding agreement to the provisions thereof and a waiver of all Claims in connection therewith, whether direct, indirect or consequential. Pursuant to California Public Contract Code §7100, Contractor may specifically exclude individual Change Order items from operation of the Contractor’s written acceptance of the Change Order and waiver of all Claims in

connection therewith. A general statement that the Contractor reserves their right to Claim additional time and/or money at a future date for all Work associated with the Change Order is not permitted.

B. If Contractor disagrees with any terms or conditions of a Change Order, Contractor must sign it with the statement "Signed Under Protest" and attach a written statement detailing the basis of the disagreement.

C. The written statement detailing the basis of the disagreement must specifically identify each item to be excluded from the Contractor's waiver and state why the Contractor is unable to determine the time and/or money due from the District for the items excluded from the Contractor's release.

9.08 CONSTRUCTION COST REDUCTION INCENTIVE (VALUE ENGINEERING PROPOSAL)

A. General

1. The cost-reduction incentive program provides a mechanism by which the Contractor can be motivated to use his construction expertise to improve contract performance and thereby create an overall reduction in the total cost of the Contract. The Contractor and its subcontractors may participate in the cost-reduction program; however, participation of the subcontractors shall be through the Contractor. In addition, the sharing arrangement between the Contractor and the subcontractor must be mutually agreed upon by the Contractor and its subcontractor, and written evidence of such agreement will be submitted along with the submittal of the cost-reduction proposal.
2. No cost reduction proposals shall be submitted for which the District's share in the participation of the proposals is not greater than $5,000.
3. Cost-reduction proposals shall comply with the following conditions:
   a. The proposed change shall not impair, in any manner, the essential functions or characteristics of the project, including but not limited to, service life, economy of operation, ease of maintenance, desired appearance, or design and safety standards.
   b. The proposed change will not cause undue interruption of the Contract work, nor shall the proposed change be allowed to extend the Contract completion date of the project unless an extension provides a specific project benefit.
   c. The proposed change shall be in compliance with all local permits and regulations and code requirements as set forth in the contract documents.
   d. The proposed change shall not involve payment of royalties by the District to the Contractor.

B. Proposal Submittal:

1. The cost-reduction proposal shall generally conform to Section 01330, Submittal Procedures. The cost-reduction proposals shall contain as a minimum the following information:
   a. Name of individuals associated with the development and preparation of the cost-reduction proposal.
   b. A detailed description and duly signed plans and specifications showing work as presently designed and the proposed changes. Clear identification of all advantages and disadvantages for each change proposed.
   c. A summary of estimated costs which shall include but not be limited to the following:
      1) Project construction costs before and after the cost-reduction proposal. This shall be a detailed estimate identifying the following items:
         a) Quantities of material and equipment.
         b) Unit prices of materials and equipment.
         c) Labor hours and rates for installation.
         d) Equipment hours and rates for installation.
         e) Subcontractors and prime contractor markups.
         f) Other estimate items necessary to evaluate the proposal.
      2) Operation and maintenance costs before and after the cost-reduction proposal.
      3) Costs for implementing the cost-reduction proposal not included in item 1 above.
      4) Other costs as required to meet all local permits, regulations, and code requirements as set forth in the contract documents.

5) Time required for execution of the proposed change.

d. A preliminary schedule indicating the general time impacts for implementing the proposed change. Also indicate the date that the cost-reduction proposal needs to be approved for implementation.

2. If the District advises the Contractor that the proposed change will be reviewed for more detailed consideration and approval, a detailed procedure and schedule for implementing the proposed change shall be submitted. This detailed procedure and schedule shall include all necessary Contract amendments. This submittal shall also include a copy of the current Contractor's schedule showing all changes which would occur if the cost-reduction proposal were accepted.

3. The provisions of Section 00700-9.08, Construction Cost Reduction Incentive, shall not be construed to require the District or Engineer to consider any cost-reduction proposal which may be submitted. The District will not be liable to the Contractor for failure to accept or act upon any cost-reduction proposal submitted pursuant to this Section nor for any delays to the work attributable to any such proposal. The District shall not be responsible or liable for payment of any of the Contractor's costs associated with a non-accepted proposal.

4. If a cost-reduction proposal is similar to a change in the Contract Documents under consideration by the District at the time said proposal is submitted, or if such a proposal is based upon or similar to standard specifications, standard special provisions, or standard plans adopted by the District after the advertisement for the Contract, the District will not accept such proposal, and the District reserves the right to made such changes without cost-reduction compensation to the Contractor under the provisions of this Section.

5. The Contractor shall continue to perform the work in accordance with the requirements of the contract until an executed change order, incorporating the cost-reduction proposal has been issued. If an executed change order has not been issued by the date upon which the Contractor's cost-reduction proposal specifies that a decision thereon should be made, or such other date as the Contractor may subsequently have specified in writing, such cost-reduction proposal shall be deemed rejected.

6. The District shall be the sole judge of the acceptability of the cost-reduction proposal and the estimated net savings in construction costs from the adoption of all or any part of such proposal. In determining the estimated net savings, the right is reserved to disregard the contract bid prices if in the judgment of the District, such prices do not represent a fair measure of the value of work to be performed or to be deleted.

7. The District reserves the right, where it deems such action appropriate, to require the Contractor to share in the District's costs of investigating a cost-reduction proposal submitted by the Contractor as a condition of considering such proposal. Where such a condition is imposed, the Contractor shall indicate its acceptance thereof in writing, and such acceptance shall constitute full authority for the District to deduct amounts payable to the District from any monies due or may become due to the Contractor under the Contract.

C. Acceptance:

1. If the Contractor's cost-reduction proposal is accepted in whole or in part, such acceptance will be by a Contract change order, which shall specifically state that it is executed pursuant to 00700-Article 9, Changes in the Work. Such change order shall incorporate the changes in the Plans and Specifications, which are necessary to be put into effect and shall include any conditions upon which the District's approval thereof is based, if the approval of the District is conditional. The change order shall also set forth estimated net savings in construction costs attributable to the cost-reduction proposal effectuated by the change order and shall further provide that the Contractor be paid fifty percent (50%) of said estimated net savings amount. The Contractor's cost of preparing the cost-reduction proposal and the District's costs of investigating a cost-reduction proposal, including any portion thereof paid by the Contractor, shall be excluded from consideration in determining the estimated net savings in construction costs.

2. Acceptance of the cost-reduction proposal and performance of the work thereunder shall not extend the time of completion of the contract, unless specifically provided for in the contract change order authorizing the use of the cost-reduction proposal.

3. The amount specified to be paid to the Contractor in the change order which effectuates a cost-reduction proposal shall constitute full compensation to the Contractor for the cost-reduction proposal and the performance of the work thereof pursuant to the said change order.

4. The District expressly reserves the rights to adopt a cost-reduction proposal for general use on contracts administered by the District when it determines that said proposal is suitable for the application to other contracts. When an accepted cost-reduction proposal is adopted for general use, only the Contractor who first submitted such proposal will be eligible for compensation pursuant to this Section, and in that case, only as to those contracts awarded to this same Contractor prior to submission of the accepted cost-reduction proposal and as to which such cost-reduction proposal is also submitted and accepted. Cost-reduction proposals identical or similar to previously submitted proposals will be eligible for consideration and compensation under the provisions of this Section, if the identical or similar previously submitted proposals were not adopted for general application to other contracts administered by the District.

****END ARTICLE 9****

**ARTICLE 10 - PAYMENTS**

10.01 BASIS OF PAYMENT

A. General:

1. The Contractor shall accept the compensation, as herein provided, as full payment for furnishing all labor, materials, tools, equipment, and incidentals necessary to the completed Work and for performing all work contemplated and embraced under the Contract; also for loss or damage arising from the nature of the Work, or from the action of the elements, or from any unforeseen difficulties which may be encountered during the prosecution of the Work, also for all expenses incurred in consequence of the suspension or discontinuance of the Work as herein specified; and for completing the Work according to the Contract Documents. Neither the payment of any estimate nor of any retained percentage shall relieve the Contractor of any obligation to make good any defective work or material.
2. No compensation will be made in case of loss of anticipated profits. Increased or decreased work involving supplemental agreements will be paid for as provided in such agreements.
3. Full compensation for conforming to all of the provisions of the Contract Documents shall be considered as included in the prices paid for the various Contract items of work and no additional compensation will be allowed therefor.
4. See Section 01999, Referenced Forms, for forms related to Article 10.

B. Payment for Patents and Patent Infringement:

1. All fees or claims for any patented invention, article, or arrangement that may be used upon, or in, any manner connected with the performance of the Work or any part thereof shall be included in the price bid for doing the work, and the Contractor and its sureties shall defend, protect, and hold the District, its officers, agents, employees, the Construction Manager, and Design Engineers, together with all their officials, officers, volunteers, agents, and employees harmless from and any and all suits and claims including claims for attorney's fees, expert's fees and costs brought or made by the holder of any invention or patent, or on account of any patented or unpatented invention, process, article, or appliance manufactured for or used in the performance of the Contract, including its use by the District, unless otherwise specifically stipulated in the Contract. Before final payment is made on the Contract, the Contractor shall furnish an affidavit to the District regarding patent rights for the Project. The affidavit shall state that all fees and payments due as a result of the work incorporated into the Project or methods utilized during construction have been paid in full. The Contractor shall certify in the affidavit that no other fees or claims exist for work in this Project.

C. Payment of Taxes:

1. The Contractor shall pay and shall assume exclusive liability for all taxes levied or assessed on or in connection with its performance of this Contract, whether before or after acceptance of the work, including, but not limited to, State and local sales and use taxes, Federal and State payroll taxes or assessments, and excise taxes, including any taxes or assessments levied or increased during the performance period of the work. No separate allowance will be made therefor, and all costs in connection therewith shall be included in the total amount of the Contract price.

10.02 PARTIAL PAYMENTS

A. General:

1. In consideration of the faithful performance of the Work prosecuted in accordance with the Contract Documents, the District will pay the Contractor for all such work installed on the basis of unit prices and/or percentage completion of lump sum Bid Items. Amounts earned for lump sum work will be based on accepted Cost Breakdown (See Section 01200, Measurement and Payment).
2. Payments will be made by the District to the Contractor on estimates duly certified and approved by the Construction Manager, based on the Lump Sum or unit price value of equipment installed and tested, labor and materials incorporated into said permanent work by the Contractor during the preceding month, and acceptable materials and equipment on hand (materials and equipment furnished and delivered to the Site

by the Contractor and not yet incorporated into the work accompanied by an approved invoice). Payments will not be made for temporary construction unless specifically provided for in the Contract Documents.

3. Partial payments will be made monthly based on work accomplished as of a day mutually agreed to by the District and the Contractor.
4. The Contractor shall submit a completed and signed progress payment request form with its estimate of the work completed during the prior month and the work completed to date in a format corresponding to the unit price schedule and accepted cost breakdown. Additionally, the Contractor shall submit a detailed statement of the Contractor's request for payment of acceptable materials and equipment on hand in compliance with Section 00700-10.03, Partial Payments - Inclusion of Materials on Hand. Each payment request shall list each Change Order executed prior to date of submission, including the Change Order Number.
5. Contractor shall certify each payment request stating that the Contractor has met all requirements of the Contract Documents for all amounts included in the payment request and that all work included in the payment request has been performed in accordance with the Contract Documents.
6. Upon receipt of Contractor's requests for payment, the District shall act in accordance with the following:
   a. The Construction Manager shall review the submitted estimates, as soon as practicable after receipt for the purpose of determining that the estimates are a proper request for payment, and shall prepare a certified estimate of the total amount of work done and acceptable materials and equipment on hand.
   b. Any request for payment determined not to be a proper payment request suitable for payment shall be returned to the Contractor as soon as practicable, but not later than seven (7) days after receipt. A request for payment returned pursuant to this paragraph shall be accompanied by a document setting forth in writing the reasons why the request for payment is not proper.
   c. The number of days available to the District to make a payment without incurring interest pursuant to this Section shall be reduced by the number of days by which the District exceeds the seven (7) day return requirement set forth in subdivision (b) above.

B. If requested, the Contractor shall provide such additional data as may be reasonably required to support the partial payment request. The Construction Manager will adjust or correct the payment request, and will be available to meet and discuss the partial payment request prior to its resubmittal(s). When the Contractor's estimate of amount earned conforms with the Construction Manager's evaluation, the Contractor shall submit to the Construction Manager a properly completed and signed progress payment request. The Construction Manager will submit the recommended progress payment request for the District's approval and processing. Payment will be made by the District to the Contractor in accordance with District's normal accounts payable procedures; the District shall retain amounts in accordance with Section 00700-10.04, Right to Withhold Amounts.

C. No such estimate or payment shall be required to be made, when in the judgment of the Construction Manager, the Work is not proceeding in accordance with the provisions of the Contract, or when in the Construction Manager's judgment the total value of the Work done since the last estimate amounts to less than One Thousand Dollars ($1,000).

D. Subject to the provisions of this Section, the District shall pay the Contractor within thirty (30) days after receipt of undisputed and properly submitted requests for payment from the Contractor. In accordance with California Public Contract Code §20104.50, if the District fails to pay an undisputed request for payment within the allotted thirty (30) days, the District shall pay interest to the Contractor equivalent to the legal rate set forth in subdivision (a) of §685.010 of the California Code of Civil Procedure.

E. Each progress payment request and the final payment request shall be deemed “proper” only if it is submitted on the form approved by the District, with all of the requested information completely and accurately provided by the Contractor.

10.03 PARTIAL PAYMENTS- INCLUSION OF MATERIALS ON HAND

A. Materials, as used herein, shall be considered to be those items which are fabricated and manufactured material and equipment. Only those materials for which the Contractor can transfer clear title to the District will be qualified for partial payment. The Contractor may request payment of seventy-five (75) percent of the actual

net cost of these materials. The request for partial payment will be subject to retention as provided elsewhere in the Contract Documents.

B. To receive partial payment for materials and equipment not incorporated in the Work, it shall be necessary for the Contractor to submit to the Construction Manager a list of such materials, at least seven (7) days prior to submitting the monthly estimate of amount earned for work completed. At the Construction Manager's sole discretion, it may approve items for which partial payment is to be made subject to the following:

1. Equipment and materials will only be eligible if given conditional or final acceptance by the Design Engineer and are in apparent compliance with favorably reviewed shop drawings.
2. Only equipment or materials which have received favorable review of shop drawings will qualify. The Operation and Maintenance Manuals for equipment must be submitted in accordance with Section 01782, Operation and Maintenance Data, prior to payment for stored materials.
3. Eligible equipment or materials must be delivered and properly stored, protected, and maintained in a manner favorably reviewed by the Construction Manager and in accordance with the accepted Operation and Maintenance Manuals, at the job Site or at a bonded warehouse in the vicinity, a maximum of 30 miles, of the Work. In addition to the requirements noted herein, equipment or materials stored offsite are subject to the following:
   a. Contractor will immediately, permanently, and prominently label all of the materials with the following notice: “THIS MATERIAL IS THE PROPERTY OF THE DISTRICT”.
   b. Contractor will, concurrent with payment, execute and deliver to the District a Bill of Sale.
   c. Contractor warrants to the District that no third party has a lien against any of the Materials, and that Contractor has full power and authority to convey clear title to the Materials to the District by Bill of Sale. If the District so requests, Contractor will cooperate in the filing of a UCC-1 notification or other documentation placing notice of the District’s title in applicable state records.
   d. Contractor to store all of the Materials in a climate controlled and secured facility protected from adverse weather conditions in accordance with the Operations and Maintenance Manuals. The District has the right to inspect and approve the proposed facility.
   e. Contractor shall provide access to the facility when requested by the District.
   f. All warranty periods for the Materials will commence as described in the Contract Documents.
   g. Risk of loss as to the Material shall remain with the Contractor until Substantial Completion of the Work under the Contract.
   h. Contractor shall keep the Material fully insured for the benefit to the District, and provide the District with a satisfactory certificate of insurance showing such coverage.
   i. Any Material warranties under the Contract shall commence only upon Substantial Completion or beneficial occupancy as provided in the Contract.
   j. The District reserves the right that if the above conditions are not met by the Contractor, the District shall adjust future monthly progress payments to reduce previously-paid materials on hand to zero or an amount the District deems appropriate.
   k. The Contractor is responsible for the risk of damage, theft, vandalism, or loss.

C. Effect of Payment: Payment will be made by District based on the Construction Manager’s observations at the Site and the data comprising the progress payment request. Payment will not be a representation that the District has:

1. made exhaustive or continuous on-site inspections to check the quality or quantity of Work;
2. reviewed construction means, methods, techniques, sequences or procedures;
3. reviewed copies of requisitions received from subcontractors and material suppliers and other data requested by District to substantiate Contractor’s right to payment;
4. made examination to ascertain how or for what purpose Contractor has used money previously paid on account of the Contract Sum; or
5. accepted all or part of the Work.

10.04 RIGHT TO WITHHOLD AMOUNTS

A. Retention: The District will withhold from each of the partial payments and retain as part security, five percent (5%), of the amount earned until the final payment in accordance with Public Contract Code §7201.

B. Other Withholds: In addition to the amount which the District may otherwise retain under the Contract, the District may withhold a sufficient amount or amounts of any payment or payments otherwise due the Contractor, as in its judgment may be necessary to cover:

1. For defective work not remedied.
2. A reasonable doubt that the Contract can be completed for the balance then unpaid.
3. Damage to another contractor or third party, or to property.
4. Failure of the Contractor to maintain Project Record Documents current as required in Section 01780, Record Documents.
5. Cost of insurance arranged by the District due to cancellation or reduction of the Contractor's insurance.
6. Failure to submit, revise, resubmit or otherwise conform to the requirements herein for preparing and maintaining a construction schedule as required in Section 01324, Progress Schedules and Reports.
7. Failure to make proper submissions, as specified herein.
8. Payments due the District from the Contractor.
9. Reduction of Contract Amount because of modifications.
10. The Contractor's neglect or unsatisfactory prosecution of the Work including additional engineering and administrative costs related to construction and/or shop drawing errors and the failure to clean up.
11. Provisions of law that enable or require the District to withhold such payments in whole or in part.
12. Stop Notice claims filed by Contractor’s subcontractors, of any tier, or its material suppliers.
13. Failure of Contractor to submit Operation and Maintenance Manuals as required in Section 01782, Operation and Maintenance Data.
14. Failure to comply with environmental or other regulatory requirements.
15. Liquidated damages.

C. When the above reasons for withhold amounts are removed, payment will be made to the Contractor for amount withheld because of them.

D. The District in its discretion may apply any withheld amount or amounts to the payment of valid claims. In so doing, District shall be deemed the agent of Contractor, and any payment so made by District shall be considered as a payment made under the Contract by District to Contractor and District shall not be liable to Contractor for such payment made in good faith. Such payments may be made without prior judicial determination of the claim or claims. District will render to Contractor a proper accounting of such funds disbursed in behalf of Contractor.

10.05 STOP NOTICES

A. District will comply with California Civil Code 9000 et seq. regarding Stop Notices.

B. All Preliminary and Stop Notices must be sent to the District’s Project Representative, named in the Section 00510, Agreement.

10.06 SECURITY SUBSTITUTION FOR RETENTION

A. Pursuant to Public Contract Code §22300 (the provisions of which are hereby incorporated herein by reference) the Contractor may substitute securities for any moneys withheld by the District as retention under Sections 00700-10.02, Partial Payments, or 00700-10.09, Final Inspection and Payment, to ensure performance under the contract; however, substitution of securities shall not be allowed hereunder if financing for this Contract has been provided by the Farmers Home Administration of the United States Department of Agriculture pursuant to the Consolidated Farm and Rural Development Act (7 U.S.C. Sec. 1921 et seq.), or where federal regulations or policies, or both, do not allow the substitution of securities. At the request and expense of Contractor, securities equivalent to the amount withheld shall be deposited with the District, or with a state or federally

chartered bank in California as the escrow agent, who shall then pay those moneys to Contractor. Upon satisfactory completion of the Contract, the securities shall be returned to Contractor.

B. Contractor shall have the obligation of ensuring that such securities deposited are sufficient so as to maintain, in total fair market value, an amount equal to the cash amount of the sums to be withheld under the Contract. If, upon written notice from the District, or from the appropriate escrow agent, indicating that the fair market value of the securities has dropped below the dollar amount of monies to be withheld by the District to ensure performance, Contractor shall, within five days of the date of such notice, post additional securities as necessary to ensure that the total fair market value of all such securities held by the District, or in escrow, is equivalent to the amount of money to be withheld by the District under the Contract.

C. Securities eligible for investment include those listed in §16430 of the California Government Code, bank or savings and loan certificates of deposit, interest-bearing demand deposit accounts, standby letters of credit that are secured by securities listed in §16430 of the Government Code or that contain terms and conditions that provide assurances of financial integrity substantially equivalent to that of securities listed in said §16430, or any other security of like financial integrity mutually agreed to by Contractor and District. The District reserves the right to determine the acceptability of eligible securities proposed by Contractor for substitution of moneys withheld as retention. Contractor shall be the beneficial owner of any securities substituted for moneys withheld and shall receive any interest thereon.

D. If Contractor elects to receive interest on moneys withheld in retention by District, Contractor shall, at the request of any subcontractor, make that option available to the subcontractor regarding any moneys withheld in retention by Contractor from the subcontractor. If Contractor elects to receive interest on any moneys withheld in retention by District, then the subcontractor shall receive the identical rate of interest received by Contractor on any retention moneys withheld from the subcontractor by Contractor, less any actual pro rata costs associated with administering and calculating that interest. In the event that the interest rate is a fluctuating rate, the rate for the subcontractor shall be determined by calculating the interest rate paid during the time that retentions were withheld from the subcontractor.

E. The provisions of the immediately preceding paragraph shall apply only to those subcontractors performing more than five (5%) percent of Contractor's total bid. Contractor shall not require any subcontractor to waive any provision of this Section pertaining to the rights of subcontractors.

F. The escrow agreement used hereunder shall be null, void, and unenforceable unless it is substantially similar to the form included in Public Contract Code §22300 which is reproduced in Section 00610, Sample Escrow Agreement, for Security Deposits in Lieu of Retention.

G. Specific securities proposed for investment shall be submitted to the District for determination of acceptability. Standby letters of credit are not eligible for investment.

10.07 WARRANTY OF TITLE

A. No material, supplies, or equipment for the Work under this Contract shall be purchased subject to any chattel mortgage, security agreement, or under a conditional sale or other agreement by which an interest therein or any part thereof is retained by the seller or supplier. The Contractor warrants good title to all material, supplies, and equipment installed or incorporated in the work and agrees upon completion of all work to deliver the premises, together with all improvements and appurtenances constructed or placed thereon by the Contractor, to the District free from any claims, liens, security interests, or charges. The Contractor further agrees that neither the Contractor nor any person, firm, or corporation furnishing any materials or labor for any work covered by this Contract shall have any right to a lien upon the premises or any improvement or appurtenances thereon, provided that this shall not preclude the Contractor from installing metering devices and other equipment of utility companies or of municipalities, the title of which is commonly retained by the utility company or the municipality. In the event of the installation of any such metering device or equipment, the Contractor shall advise the District as to the legal District thereof.

B. Nothing contained in this paragraph, however, shall defeat or impair the right of such persons furnishing materials or labor under any bond given by the Contractor for their protection or any rights under any law permitting such persons to look to funds due the Contractor in the hands of the District. The provisions of this

Paragraph shall be inserted in all subcontracts and material contracts, and notice of its provisions shall be given to all persons furnishing materials for the work when no formal Contract is entered into for such materials.

10.08 SUBSTANTIAL COMPLETION

A. When the Contractor considers that the Work or portion of the Work as defined in Section 01110, Summary of Work, is substantially complete, the Contractor shall notify the Construction Manager accompanied with the Contractor's Certification of Completion form included at the end of this Section. Upon receipt of the notification, the Construction Manager, the District, the Design Engineer, and/or their authorized representatives will make inspection, to determine if the Work and administrative requirements are sufficiently complete in accordance with the Contract Documents so the District can occupy or utilize the Work for its intended use. If items are found which prevent such use or occupancy, the Construction Manager shall notify the Contractor in writing of such items by issuing a Corrective Work Item List.

B. Upon the completion of such corrective work, the Contractor shall so notify the Construction Manager in writing. The Construction Manager, the District, and/or the Design Engineer shall inspect the Work to determine its acceptability for Substantial Completion and for determination of other items which do not meet the terms of the Contract. Upon verification that the Work is substantially complete the Construction Manager shall prepare a Certificate of Substantial Completion and the Punch List. The Certificate shall establish the date of Substantial Completion and the responsibilities of the District and Contractor for security, maintenance, heat, utilities, damage to the Work and insurance, commencement of warranties required by the Contract Documents, and shall fix the time, not to exceed 60 days, within which the Contractor shall finish all items on the Punch List or remaining work or administrative requirements accompanying the Certificate. When the preceding provisions have been approved by both the District and the Contractor, they shall sign the Certificate to acknowledge their written acceptance of the responsibilities assigned to them in such Certificate. By such acknowledgment, the District has the right to retain, in accordance with applicable law, withheld monies due the Contractor to pay the District's actual costs including, but not limited to, charges for engineering, inspection and administration incurred due to the failure to complete the Punch List within the time period provided in the Certificate of Substantial Completion, which costs the District may deduct from amounts due or that may become due the Contractor under the Contract.

10.09 FINAL INSPECTION AND PAYMENT

A. After receipt of the last partial payment, but prior to acceptance of the Work by the District, the Contractor shall send a letter to the Construction Manager. The letter, pursuant to California Public Contract Code §7100, shall state that acceptance of the final payment described below shall operate as and shall be, a release to the District, its officers, employees, the Construction Manager, the Design Engineer, and their duly authorized agents, from all claim of and/or liability to the Contract arising by virtue of the Contract related to undisputed contract amounts. Disputed Contract claims in stated amounts previously filed as provided in Section 00700-Article 11, Protests, Disputes and Claims, may be specifically excluded by the Contractor from the operation of the release.

B. Following receipt of all required submittals and the Construction Manager's written statement that construction is complete and recommendation that the District accept the project, the District will take formal action on acceptance.

C. Within ten (10) days of the acceptance by the District of the completed work embraced in the Contract, the District will cause to be recorded in the office of the County Recorder a Notice of Completion.

D. Within sixty (60) days after the date of the completion of the Project pursuant to Public Contract Code section 7107, the District will pay the Contractor in lawful money such sums of money as may be due the Contractor and are undisputed including all sums retained but excluding such sums as have previously been paid the Contractor. This payment will constitute the final payment to the Contractor under this Contract. Prior to receipt of such payment, the Contractor shall send District a "conditional waiver and release upon final payment" properly executed in accordance with California Civil Code §8132.

E. The District will pay the Contractor in lawful money such sums of money as may be due the Contractor including all sums retained but excluding such sums as have previously been paid the Contractor and as may be needed

to cover outstanding stop notices. This payment will constitute the final payment to the Contractor under this Contract.

F. In the event of a dispute between the District and the Contractor, the District may in accordance with California Public Contract Code §7107 withhold from the final payment an amount of 150 percent of the disputed amount.

****END ARTICLE 10****

## ARTICLE 11 - PROTESTS, DISPUTES AND CLAIMS

11.01 PROTESTS

A. If Contractor contends that it was directed by the Construction Manager to perform Work outside the requirements of the Contract Documents, or if Contractor considers any direction, instruction or decision of Construction Manager to be incorrect or improper, Contractor must immediately notify District's Authorized Representative in writing within five (5) days of such directive, instruction, or decision before proceeding with such Work.

B. If Contractor proceeds with such Work without complying with the requirements of Section 00700- 11.01.A above, providing advance written notification, Contractor will be deemed to have assented that the Work is within the Contract's requirements, and Contractor will have forfeited any right to a protest or Claim.

11.02 DISPUTES

A. A Dispute is a written disagreement submitted by the Contractor seeking adjustment of Contract terms, payment of money, extension of Contract Time or other relief with respect to the terms of the Contract.

B. A Dispute is not a Claim.

C. Each Dispute must involve only one issue to be decided by the District.

D. Dispute documentation must be complete when submitted.

E. The evaluation of the Contractor's position will be based on District's records and the Dispute documentation submitted by Contractor.

F. Contractor must furnish Dispute documentation in the following format:

1. Introduction and Issue Identification.
2. Background.
3. Chronology.
4. Contractor's Position (Reason for District's potential liability).
5. Supporting documentation of merit.
6. Supporting documentation of damages.
7. Schedules (if appropriate).
8. Productivity exhibits (if appropriate).

G. Supporting documentation of merit must be cited by reference, photocopies, or explained. Supporting documentation may include, but not be limited to General Conditions, General Requirements, Technical Specifications, Drawings, correspondence, conference notes, Shop Drawings and other Submittals, Submittal logs, survey books, inspection reports, delivery schedules, test reports, daily reports, subcontracts, fragmentary Critical Path method schedules, photographs, technical reports, Requests for Information, field instructions, and other related records necessary to support the merit of Contractor's position.

H. Supporting documentation of damages must be cited, photocopied, or explained. Supporting documentation may include but not be limited to any or all documents related to the preparation and submission of the Bid; Subcontractor, Supplier or vendor files and cost records; certified payroll reports, materials, equipment, and construction equipment and services costs; purchase orders; invoices; project as-planned and as-built costs;

Subcontractor and Supplier payment documentation; quantity reports; other related records; general ledger and any other accounting materials necessary to support the Contractor's position.

I. The District may elect to enter into discussions and/or negotiations with the Contractor for the purpose of resolving the Dispute. Negotiations on Disputed Work are for settlement purposes only and are not binding.

J. District's Authorized Representative will decide Disputes and Claims. The Contractor will be furnished with a written copy of the District's decision.

11.03 NOTICE OF POTENTIAL CLAIM

A. Contractor is not entitled to additional compensation for any cause unless Contractor submits to the Construction Manager a written notice of the potential Claim as hereinafter specified.

B. The written notice of potential Claim must set forth the reasons for which Contractor believes additional compensation and/or time will or may be due, the nature of the costs and/or time involved, and, insofar as possible, the amount of the potential Claim. The said notice as above required must have been submitted to Construction Manager before Contractor performs the Work giving rise to the potential Claim for additional compensation and/or time, if based on an act or failure to act by District, or in all other cases within fourteen (14) Days after the happening of the event, thing or occurrence giving rise to the potential Claim.

C. Compliance with the foregoing shall not be a prerequisite to any Claim that is based on differences in measurement or errors of computations as to Contract quantities.

11.04 CONTEMPORANEOUS DOCUMENTATION

A. Contractor must contemporaneously generate full and complete records of the cost and time incurred to perform Disputed Work.

B. Beginning with the first day on which any Disputed Work is performed, and each following Day, Contractor must maintain detailed hourly records of labor, construction equipment, and services, and itemized records of materials and equipment used each Day in the performance of the Disputed Work. Such records must be of a form acceptable to Construction Manager, must be signed by Contractor, and are subject to verification by Construction Manager.

11.05 CLAIMS

A. A Claim is a separate unresolved Dispute by the Contractor for:

1. a Contract Time extension;
2. payment of money or damages arising from Work done by, or on behalf of, the Contractor pursuant to the contract for a public work and payment of which is not otherwise expressly provided for or the claimant is not otherwise entitled to; or
3. an amount the payment of which is disputed by the District.

B. If a Dispute or Disputes have not been resolved to the satisfaction of the Contractor, the Contractor may submit a Claim along with detailed documentation supporting the Claim.

C. A single Claim may include multiple issues. However, each issue in a Claim must be separately identified and supported.

D. Contractor must submit certified copies of the Claim documentation. Certification must be provided in accordance with Section 00700-11.05.J below.

E. All Claim documentation must be complete when submitted.

F. Each issue to be decided by the District must be clearly identified in the Claim. Issues not clearly identified and included in the certified Claim will not be considered.

G. The evaluation of the Contractor's Claim will be based on District's records and the certified Claim documentation submitted by Contractor.

H. Claim Documentation: Claim documentation must conform to generally accepted auditing standards and must be in the following format:

1. Introduction.

2. General Background Discussion.
3. Summary of Issues and Damages.
4. Issues:
   a. Index of Issues.
   b. For Each Issue (Begin each issue on a new page).
      1) Background.
      2) Chronology.
      3) Contractor's Position (Reason for District's potential liability).
      4) Supporting Documentation of Merit.
      5) Supporting Documentation of Damages.
      6) Schedules (if appropriate).
      7) Productivity exhibits (if appropriate).
5. Supporting documentation of merit must be cited by reference, photocopies, or explained. Supporting documentation may include, but not be limited to General Conditions, General Requirements, Technical Specifications, Drawings, correspondence, conference notes, Shop Drawings and other Submittals, Submittal Logs, survey books, inspection reports, delivery schedules, test reports, daily reports, subcontracts, fragmentary Critical Path method schedules, photographs, technical reports, Requests for Information, field instructions, and other related records necessary to support the merit of Contractor's position.
6. Supporting documentation of damages must be cited, photocopied, or explained. Supporting documentation may include but not be limited to any or all documents related to the preparation and submission of the Bid; Subcontractor, Supplier or vendor files and cost records; certified payroll reports, materials, equipment, and construction equipment and services costs; purchase orders; invoices; project as-planned and as-built costs; Subcontractor and Supplier payment documentation; quantity reports; other related records; general ledger and any other accounting materials necessary to support the Contractor's position.

I. Submission of Claim Costs: Within thirty (30) days after incurring the last cost of work for which the Contractor contends it is due additional compensation is incurred, but if costs are incurred over a span of more than thirty (30) days, then within fifteen (15) days after the thirtieth day and every month thereafter, the Contractor shall submit to the Construction Manager, as best the Contractor is able, its costs incurred for the claimed matter. Claims shall be made in itemized detail, and should the Construction Manager be dissatisfied with the format or detail of presentation, upon request for more or different information, the Contractor will promptly comply, to the satisfaction of the Construction Manager. If the additional costs are not fully ascertainable, they shall be estimated with as much accuracy as possible in the circumstances. The Construction Manager shall have the right as provided in Section 00700-9.05, Cost Pricing Date and Access to Records, to review the Contractor’s records pertaining to a submitted claim. In case the claim is found to be just, it shall be allowed and paid for as provided in Section 00700-Article 9, Changes in the Work.

J. Each original copy of the Claim must include the following certification, signed in the same manner as the Agreement was signed:

1. Under the penalty of law for perjury or falsification and with specific reference to the California False Claims Act, Government Code §12650 et seq., the undersigned,

Name: _____

Title: _____

Company: _____

hereby certifies that this Claim is made in good faith, is a true statement of the actual costs incurred and time sought, is fully supported pursuant to the Contract between parties, that the supporting documentation is accurate and complete to the best of my knowledge and belief, and that the amount requested accurately reflects the Contract adjustments for which District is responsible.

Dated: _____

Signed: _____

Subscribed and sworn before me this _____ day of _____

(Notary Public)

My Commission Expires _____

K. Failure to submit the notarized certification will be sufficient cause for rejecting the Claim submission.

L. If Contractor is unable to support any part of a certified Claim and it is determined that such inability is attributable to falsity of such certification or misrepresentation of fact or fraud by Contractor, Contractor shall be liable to District for three (3) times the amount of damages which District sustains, plus the cost of civil action, and may be liable to District for a civil penalty of up to Ten Thousand Dollars ($10,000) for each false claim.

11.06 PROCESSING OF CLAIMS

A. General: This Contract provides for three types of Contract Claims, which will be processed and resolved under different subsections. Any claim for money or damages of $375,000 or less or for a time extension (i.e., any claim subject to California Public Contract Code §20104) shall be processed and resolved in accordance with Section 00700-11.06.B below. Any claim for money or damages of more than $375,000 (i.e., any claim not subject to Public Contract Code §20104) shall be processed and resolved in accordance with Section 00700-11.06.C below. Any Contract Claim sent to District by registered mail or certified mail with return receipt requested (i.e., any claim subject to Public Contract Code §9204) shall be processed and resolved pursuant to Section 00700-11.06.D.

B. Claims for $375,000 or Less or for Time Extension and Not Sent by Registered or Certified Mail.

1. Application: This subsection applies to all claims (not sent by registered or certified mail) for $375,000 or less in value, including any claim for a time extension or for a time extension that includes claimed delay damages of $375,000 or less.

2. District Response to Contract Claim: The Construction Manager shall respond in writing to the Contract Claim within sixty (60) days of receipt of the claim (or within forty-five (45) days of receipt for claims of less than $50,000), or may request, in writing, within thirty (30) days of receipt of the claim, any additional documentation supporting the claim or relating to defenses to the claim the District may have against the Contractor. If additional information is thereafter required, it shall be requested and provided pursuant to this subsection, upon mutual agreement of the Construction Manager and the Contractor. The Construction Manager's written response to the claim, as further documented, shall be submitted to the Contractor within thirty (30) days after receipt (or fifteen (15) days after receipt for claims of less than $50,000) of the further documentation, or within a period of time no greater than that taken by the Contractor in producing the additional information or requested documentation, whichever is greater. The District shall not fail to pay money as to any portion of a Contact Claim that is undisputed except as otherwise provided in the Contract Documents.

3. Meet and Confer: If the Contractor disputes the Construction Manager's written response, or the Construction Manager fails to respond within the time prescribed, the Contractor may notify the District, in writing, either within fifteen (15) days of receipt of the Construction Manager's response or within fifteen (15) days of the Construction Manager's failure to respond within the time prescribed, respectively, and demand an informal conference to meet and confer for settlement of the issues in dispute. Upon such a demand, the District shall schedule a meet and confer conference within thirty (30) days for the parties to consider settlement of the dispute. If the Contractor fails to timely demand a meet and confer conference within the applicable 15-day period, then the Contractor shall be deemed not to dispute the Construction Manager's written response to the Contract Claim and the Construction Manager's decision on the Contract Claim shall be final, conclusive and binding, and the Contractor shall be deemed to have waived all its rights to further protest, judicial or otherwise.

4. Government Code Claim: Following the meet and confer conference, if the Contract Claim or any portion remains in dispute, the Contractor may file a Government Code Claim as provided in Government Code title 1, division 3.6, part 3, chapters 1 (commencing with section 900) and 2 (commencing with section 910). The running of the period of time within which Contractor must file a Government Code Claim shall

be tolled from the time the Contractor submits a timely Contract Claim pursuant to 00700-11.03 through 11.05 above until the time that the Contract Claim is denied as a result of the meet and confer process, including any period of time utilized by the meet and confer process. The District shall respond to any Government Code Claim in accordance with the Government Claims Act.

5. Lawsuit: If the claim is not resolved pursuant to Section 00700-11.06.B.4 above, the Contractor may file a lawsuit on the claim within the limitations period provided by the Government Claims Act. If the Contractor fails to timely file a lawsuit within the limitations period of the Government Claims Act, then the District's response to the Government Code Claim shall be final, conclusive and binding on the Contractor, and the Contractor thereafter shall be barred from filing a lawsuit on the claim.

6. Mediation: If the Contractor timely files a lawsuit, then within sixty (60) days, but no earlier than thirty (30) days, following the filing of responsive pleadings, the court shall submit the matter to non-binding mediation (unless waived by mutual stipulation of both parties). The mediation process shall provide for the selection within fifteen (15) days by both parties of a disinterested third person as mediator, shall be commenced within thirty (30) days of the submittal, and shall be concluded within fifteen (15) days from the commencement of the mediation unless a time requirement is extended upon a good cause showing to the court or by stipulation of both parties. If the parties fail to select a mediator within the 15-day period, any party may petition the court to appoint the mediator. The mediator's fees and expenses shall be split and paid equally between the parties. The court may, upon request by any party, order any witnesses to participate in the mediation process.

7. Arbitration: If the matter remains in dispute following the mediation or if the parties waive the mediation, then the case shall be submitted to judicial arbitration pursuant to Code of Civil Procedure part 3, title 3, chapter 2.5 (commencing with section 1141.10), notwithstanding section 1141.11 of that code. The Civil Discovery Act of 1986 (Code of Civil Procedure part 4, title 3, chapter 3, article 3 (commencing with section 2016)) shall apply to any proceeding brought under this subdivision consistent with the rules pertaining to judicial arbitration. The arbitrator shall be experienced in public works construction law. The arbitrator's fees and expenses shall be split and paid equally by the parties, except where the arbitrator, for good cause, determines a different division. The court may, upon request by any party, order any witnesses to participate in the arbitration process. Any party who, after receiving an arbitration award, requests a trial de novo but does not obtain a more favorable judgment shall (in addition to payment of any costs and fees under Code of Civil Procedure part 3, title 3, chapter 2.5 (commencing with section 1141.10)) pay the attorney's fees of the other party arising out of the trial de novo.

8. Interest: In any lawsuit filed under this subsection, District shall pay interest at the legal rate on any arbitration award or judgment. The interest shall begin to accrue on the date the lawsuit is filed in court.

C. Claims for More Than $375,000 and Not Sent by Registered or Certified Mail:

1. Application. This subsection applies to all claims (not sent by registered or certified mail) that exceed $375,000 in value, including any claim for a time extension that includes claimed delay damages exceeding $375,000.

2. District Response to Contract Claim. The Construction Manager shall respond in writing to the Contract Claim within sixty (60) days of receipt of the claim, or may request, in writing, within thirty (30) days of receipt of the claim, any additional documentation supporting the claim or relating to defenses to the claim that the District may have against the Contractor. If additional information is thereafter required, it shall be requested and provided pursuant to this subsection, upon mutual agreement of the Construction Manager and the Contractor. The Construction Manager's written response to the claim, as further documented, shall be submitted to the Contractor within thirty (30) days after receipt of the further documentation. If the Contractor fails to timely dispute the Construction Manager's decision on the matter in accordance with Section 00700-11.06.C.3 below, then the Contractor shall be deemed not to dispute the Construction Manager's written response to the Contract Claim and the Construction Manager's decision shall be final, conclusive and binding, and the Contractor shall be deemed to have waived all its rights to further protest, judicial or otherwise.

3. Government Code Claim. If the Contractor disputes the Construction Manager's written response to the Contract Claim, the Contractor may file a Government Code Claim as provided in Government Code title 1, division 3.6, part 3, chapters 1 (commencing with section 900) and 2 (commencing with section 910). District shall respond to any Government Code Claim in accordance with the California Government Claims Act.

4. Lawsuit. If the claim is not resolved pursuant to 00700-11.06.C.3 above, the Contractor may file a lawsuit on the claim within the limitations period provided by the Government Claims Act. If the Contractor fails to timely file a lawsuit within the limitations period of the Government Claims Act, then the District's response to the Government Code Claim shall be final, conclusive and binding on the Contractor, and the Contractor thereafter shall be barred from filing a lawsuit on the claim.
5. Judicial Reference. If the Contractor timely files a lawsuit, the case shall be submitted to judicial reference pursuant to California Code of Civil Procedure sections 638 and 640 through 645.1 (or any successor statute) and California Rules of Court title 3, division 9 (commencing with section 3.900). As authorized by Code of Civil Procedure section 638, a referee will consider and decide all factual and legal issues in the action. Each party acknowledges that it will not have any right to a jury trial or to have any judicial officer besides the referee hear or decide the action. When Contractor initiates the superior court lawsuit, it will, at the same time it files the complaint in the action, also file a motion for appointment of a single referee.
    a. Appointment of a referee shall be by mutual agreement within thirty (30) days between the parties, and if unsuccessful, then by the court and will be governed by Code of Civil Procedure §640, and subject to objection by either party as provided by Code of Civil Procedure §641. The referee must be a retired judge or a licensed attorney with at least ten years substantive experience in public works construction matters.
    b. The parties shall be entitled to discovery and the referee shall oversee discovery and may enforce all discovery orders in the same manner as a superior court judge. The referee shall have the authority to consider and rule on appropriate pre-hearing and post-hearing motions in the same manner as a superior court judge. The referee will have the authority to set a briefing and hearing schedule for any such motion or for a hearing on the merits.
    c. The referee's statement of decision shall include findings of fact and conclusions of law. The statement of decision will stand as the decision of the superior court and, upon filing of the statement with the clerk of the court, judgment may be entered pursuant to Code of Civil Procedure §644, subsection (a). The parties will have rights to appeal the final judgment so entered.
    d. Each party will pay half of the costs of the referee and the administrative fees of the reference proceeding, and each party will bear its own costs, expenses and attorney fees for the reference proceeding.

D. Claims Subject to California Public Contract Code §9204

1. This subsection applies to all Contract Claims sent by registered or certified mail with return receipt requested. The Contract Claim will be processed and resolved pursuant to Public Contract Code §9204, which is summarized here:
    a. District Review of Claim. Within forty-five (45) days after receiving a complete Contract Claim, District shall review the claim and provide the Contractor a written statement identifying what portion of the claim is disputed and what portion is undisputed. District will pay any undisputed portion of the claim within sixty (60) days from the date of the written statement. If District fails to timely issue a written statement, then the claim shall be deemed rejected in its entirety.
    b. Meet and Confer Conference. If the Contractor disputes the District's written statement or if the Contract Claim is deemed rejected, the Contractor may demand and the parties will conduct an informal conference to meet and confer regarding settlement in accordance with §9204, subsection (d)(2). Within ten (10) business days following the conclusion of the meet and confer conference, District shall provide Contractor a written statement identifying the portion (if any) of the claim remaining in dispute and any undisputed portion will be paid by District within sixty (60) days after this written statement.
    c. Non-Binding Mediation. Any remaining disputed portion of the claim shall be submitted to nonbinding mediation in accordance with §9204, subsection (d)(2).
    d. Interest. Any amount not paid in a timely manner as required by this subsection shall bear interest at a rate of 7 percent per annum until paid.
    e. The foregoing is a summary of §9204. In the event of any conflict between the summary and §9204, the statute will govern.
2. Lawsuit and Reference: If mediation is unsuccessful and all or parts of the Contract Claim remain in dispute, then the Contractor may pursue a lawsuit (with judicial reference) in accordance with the

procedures set forth at 00700-11.06.C.4 through 11.06.C.5. Any lawsuit under this section 11.06.C.5 will be subject to judicial reference in the same manner as under 11.06.C.4.

E. Contract Work Pending Claim Resolution: Unless otherwise directed in writing by the Construction Manager, pending resolution of a claim under this Article 11, the Contractor shall continue to diligently prosecute the Work in accordance with the Contract Documents and the instructions of the Construction Manager.

F. Records of Disputed Work: In proceeding with a disputed portion of the Work, the Contractor shall keep accurate daily records of all costs, including a summary of the hours and classification of equipment and labor utilized on the disputed work, as well as a summary of any materials or any specialized services that are used. Such information shall be submitted to the Construction Manager on a daily basis, receipt of which shall not be construed as an authorization for or acceptance of the disputed work. Failure to comply with this paragraph shall constitute a waiver of the Contractor's claim for additional compensation or a time extension as to that day.

G. Claim Meetings: From time to time the Contractor may request or the Construction Manager may call a special meeting to discuss outstanding claims should it deem this a means of possible help in the resolution of the claim. The Contractor shall cooperate and attend prepared to discuss its claims, and make available the personnel, subcontractors and suppliers necessary for resolution, of the claim. In addition, the Contractor shall timely provide all documents relevant to the claim which may reasonably be requested by the Construction Manager.

H. Tort Claims: The provisions of this Article 11 apply only to contract-based claims and they shall not apply to tort claims, and nothing in this Article 11 is intended nor shall be construed to change the time periods for filing tort claims or actions specified by Government Code title 1, division 3.6, part 3, chapters 1 (commencing with section 900) and 2 (commencing with section 910).

11.07 UNSUCCESSFUL NEGOTIATIONS

A. Unsuccessful negotiations to resolve Claims or Disputes are for settlement purposes only and are not binding.

****END ARTICLE 11****

**ARTICLE 12 - PROTECTION OF PERSONS AND PROPERTY**

12.01 SAFETY PROVISIONS

A. Contractor's Safety Responsibility:

1. The Contractor shall be solely and completely responsible for conditions of the jobsite, including safety of all persons and property during performance of the Work. This requirement shall apply continuously and not be limited to normal working hours. Safety provisions shall conform to U.S. Department of Labor (OSHA), the California Occupational Safety and Health Act (Cal/OSHA), and all other applicable Federal, State, County, and local laws, ordinances, codes, including but not limited to the requirements set forth below, and any regulations that may be detailed in other parts of these Contract Documents. In the event of conflicting requirements, the most stringent requirement as it pertains to the Contractor's safety responsibility, shall be followed by the Contractor.
2. THE CONTRACTOR IS HEREBY INFORMED THAT WORK ON THIS PROJECT COULD BE PHYSICALLY DANGEROUS TO WORKERS. NO WORK SHALL PROCEED UNTIL EACH WORKER AND SUBCONTRACTOR UNDERSTANDS THE SCOPE OF THE WORK AND ALL SAFETY RULES AND WORK PROCEDURES TO BE FOLLOWED. THE CONTRACTOR SHALL NOT ALLOW A NEW EMPLOYEE OR NEW SUBCONTRACTOR TO BEGIN WORK ON DISTRICT PROJECTS WITHOUT A PROPER SAFETY ORIENTATION. THE CONTRACTOR SHALL CAREFULLY INSTRUCT ALL PERSONNEL WORKING ON THIS PROJECT REGARDING THESE DANGERS INCLUDING, BUT NOT LIMITED TO, CONFINED SPACES, POTENTIALLY EXPLOSIVE ATMOSPHERES, HANDLING OF CHEMICALS, AND POSSIBLE EXPOSURE TO PATHOGENS. THE CONVEYANCE AND TREATMENT OF RAW SEWAGE AND ITS BY-PRODUCTS CAN INTRODUCE PATHOGENIC ORGANISMS, WHICH MAY CAUSE DISEASES SUCH AS SALMONELLOSIS, TYPHOID FEVER, PARATYPHOID FEVER, BACILLARY DYSENTERY, CHOLERA, INFECTIOUS HEPATITIS, POLIO, AMOEBIC DYSENTERY, GIARDIASIS, CRYPTOSPORIDIOSIS, AND OTHERS.
3. THE CONTRACTOR IS ADVISED THAT THE WORK MAY TAKE LONGER AND MAY REQUIRE SPECIAL EQUIPMENT IN ORDER TO PROPERLY CONFORM TO SAFETY REQUIREMENTS. THE CONTRACTOR SHALL PROVIDE PERSONAL HYGIENE, SAFETY, AND PERSONAL PROTECTIVE SUPPLIES, EQUIPMENT AND TRAINING AS ARE NECESSARY TO PREVENT INJURY TO PERSONNEL AND DAMAGE TO PROPERTY. SPECIAL CARE SHALL BE EXERCISED RELATIVE TO WORK UNDERGROUND.
4. No provision of the Contract Documents shall act to make the District, the Construction Manager, Design Engineer or any other party than the Contractor responsible for safety. The Contractor agrees that for purposes of California Labor Code §6400 and related provisions of law the Contractor, the Contractor's privities and any other entities acting pursuant to this contract will be "employers" responsible for furnishing employment and a place of employment that is safe and healthful for the employees, if any, of such entities acting pursuant to this contract and that neither the District nor the Construction Manager, Design Engineer or their respective officers, officials, employees, agents or volunteers or other authorized representatives will be responsible for having hazards corrected and /or removed at the location(s) where the work is to be performed.
5. The Contractor agrees that neither the District nor the Construction Manager, Design Engineer or their respective officers, officials, employees, agents or volunteers or other authorized representatives will be responsible for taking steps to protect the Contractor's employees from such hazards, or for instructing the Contractor's employees to recognize such hazards or to avoid the associated dangers. The Contractor agrees that with respect to the work to be performed under this contract and the location(s) where such work is to be performed, the Contractor will be responsible for not creating hazards, and for having hazards corrected and/or removed.
6. The Contractor agrees that through the safety obligations contained in this contract and the Contractor's own inspection of the Site(s) where the contract work is to be performed, the Contractor is aware and has been notified of the hazards to which the Contractor's employees may be exposed in the performance of contract work. The Contractor has taken and/or will take appropriate, feasible steps to protect the Contractor's employees from such hazards, and has instructed and/or will instruct its employees to recognize such hazards and how to avoid the associated dangers.
7. The Contractor agrees that neither the District nor the Construction Manager, Design Engineer or their respective officers, officials, employees, agents, or volunteers or other authorized representatives will be

"employers" pursuant to California Labor Code §6400 and related provisions of law with respect to the Contractor, the Contractor's privities or other entities acting pursuant to this contract.

8. The Contractor shall indemnify, defend, and hold District and Construction Manager, Design Engineer and their respective officers, officials, employees, agents and volunteers or other authorized representatives harmless to the full extent permitted by law concerning liability related to the Contractor's safety obligations in accordance with Section 00700- Article 13, Insurance and Indemnification.

   If death, serious or minor injuries, or serious or minor damages are caused, the accident shall be reported immediately by telephone or messenger to both the Construction Manager and the District. In addition, the Contractor shall furnish the Construction Manager with a copy of the Employer's Report of Injury immediately following any incident requiring the filing of said report during the prosecution of the Work under this Contract whether on, or adjacent to, the Site, giving full details and statements of witnesses. The Contractor shall also furnish the Construction Manager with a copy of the Employer's Report of Injury involving any subcontractors on this Project. The Contractor shall make all reports as are, or may be, required by any authority having jurisdiction, and permit all safety inspections of the Work being performed under this Contract. The District reserves the right to jointly participate in the investigative process with Contractor or conduct its own independent investigation.

9. If a claim is made by anyone against the Contractor or any subcontractor on account of any accident, the Contractor shall promptly report the facts in writing to the Construction Manager, giving full details of the claim.

B. Sausalito-Marin City Sanitary District Safety Documents for Contractors

1. The Contractor's supervisory staff must attend a safety orientation by the District that will include current facility safety issues and measures, such as lockout/tagout requirements. The responsibility to review and train Contractor staff on District requirements is the responsibility of the Contractor. The Contractor shall incorporate any facility-specific requirements the District has into their safety plan.

2. The Contractor and its subcontractors shall not start any construction activities unless they receive written permission from the Engineer, and the Contractor shall follow the described procedure for District permits, such as confined space entry permit, hot work permit, etc.

C. Safety Program

1. The Contractor shall establish, implement, and maintain a written Injury and Illness Prevention Program as required by Cal/OSHA Title 8, §1509 and California Labor Code §6401.7. Before beginning the Work, the Contractor shall prepare and submit with the Construction Manager a written Site-Specific Contractor Safety Program (SSCSP) that provides for the implementation of all of the Contractor's safety responsibilities in connection with the Work at the Project Site, and the coordination of that program and its associated procedures and precautions with the safety programs, precautions and procedures of each of its subcontractors and other Contractors performing work at the Project Site in accordance with Section 01160, Site Safety Requirements. The Contractor shall be solely responsible for initiating, maintaining, monitoring, coordinating, and supervising all safety programs, precautions, and procedures in connection with the Work and for coordinating its programs, precautions, and procedures of the other contractors and subcontractors performing the Work at the Project Site. The SSCSP shall address the elements required by Cal/OSHA Title 8, §1509 and Labor Code §6401.7 and contain all the necessary elements for the Contractor to administer its program on the Project Site including the following information:

   a. An organization chart and accompanying narrative that describes the responsibility for employee and public safety of those individuals who control each phase of the operations. The chart shall also show the Contractor's internal lines of communication (including subcontractors) for the program. The policies and procedures to be followed by all personnel shall be included.

   b. The designation of a Competent Person.

   c. Specific procedures for communication between the Contractor and District on safety matters. The Contractor shall designate one person with whom official contact can be made by the District on safety matters.

   d. A specific process for employees and subcontractors to become thoroughly familiar with the potential hazards of the work and applicable federal and state regulations.

   e. Specific safety procedures and guidelines for conduct of the Work.

The existence, submittal, or review of, and/or comment upon the Contractor's Injury and Illness Prevention Program and project-specific safety manual shall not in any way modify the responsibilities of the Contractor for safety for the entire Project or shift any of the responsibilities to the District. Such review and comment shall not be construed as limiting in any manner the Contractor's obligation to undertake any action that may be necessary or required to establish and maintain safe working conditions at the Site.

In addition, the District may require the submittal of Injury and Illness Prevention Programs and project-specific safety manuals from certain subcontractors at the discretion of the District. The existence, submittal, or review of, or comment upon a subcontractor's Injury and Illness Prevention Program or project-specific safety manual shall not in any way modify the responsibilities of the Contractor for safety for the entire Project or shift any of the responsibilities to the District.

The District's review, comment upon, or inspection of the Contractor's or subcontractor's performance shall not in any way modify the responsibilities of the Contractor or subcontractor for the adequacy of the Contractor's or subcontractor's work methods, equipment, bracing or scaffolding, or safety measures in, on, or near the construction Site.

The District reserves the right to stop work if the Construction Manager or District Engineer believes that there is an imminent danger to persons or property. Even though the District reserves such rights, the exercise of such rights is at the District's sole discretion, and such reservations will not be construed as an obligation of the District to monitor or enforce the Contractor's Program. The District's exercise of these rights shall not provide a basis for delay damages, extra compensation, and/or additional compensation to complete the work.

2. The Contractor shall maintain a Drug-Free workplace policy within the Project Site for the safety of its employees, the District’s, Construction Manager’s, and Design Engineer’s employees and the public. The Drug-Free workplace policy shall be posted on the Construction Site. The Contractor shall notify the Construction Manager of any criminal drug statute violation occurring on the Site not later than five (5) days after the Contractor becomes aware of such violation.
3. The Contractor shall develop its SSCSP to ensure safe work practices while working in an environment where partially treated sewage may be present. The contractor shall adhere to OSHA mandated and Cal/OSHA mandated construction safety requirements including confined space entry requirements.
4. The Contractor's compliance with requirements for safety and/or the Construction Manager's review of the SSCSP shall not relieve or decrease the liability of the Contractor for safety. The Construction Manager's review of the SSCSP is only to determine if the above listed elements are included in the program.

D. Safety Supervisor:

1. The Contractor shall appoint an employee as safety supervisor who is qualified and authorized to supervise and enforce compliance with the SSCSP. The Contractor shall notify the Construction Manager in writing prior to the commencement of work of the name of the person who will act as the Contractor's Safety Supervisor and furnish the safety supervisor's resume to the Construction Manager.
2. The Contractor will, through and with its Safety Supervisor, ensure that all of its employees and its subcontractors of any tier, fully comply with the Project Safety Policies. The Safety Supervisor shall be a full-time employee of the Contractor whose responsibility shall be for supervising compliance with applicable safety requirements on the Project Site and for developing and implementing safety training classes for all job personnel. The District shall have the authority to require removal of the Contractor's Safety Supervisor if the representative is judged to be improperly or inadequately performing the duties; however, this authority shall not in any way affect the Contractor's sole responsibility for performing this work safely, nor shall it impose any obligation upon the District to ensure the Contractor performs its work safely.

E. Safety and Protection:

1. The Contractor shall take all necessary precautions to prevent damage, injury, and loss to:

2. All employees on the Project, employees of all subcontractors, and other persons and organizations who may be affected thereby;
3. All the Work and materials and equipment to be incorporated therein, whether in storage on or off the Site; and
4. Other property at the Site or adjacent thereto, including trees, shrubs, lawns, walks, wetlands, pavements, roadways, structures, utilities, and underground facilities not designated for removal, relocation, or replacement in the course of construction, even if not shown on the Contract Drawings.
5. The Contractor shall comply with all applicable laws and regulations of any public body having jurisdiction for the safety of persons or property or to protect them from damage, injury, or loss and shall erect and maintain all necessary safeguards for such safety and protection. The Contractor shall notify owners of adjacent property and of underground facilities and utility districts when prosecution of the Work may affect them and shall cooperate with them in the protection, removal, relocation, and replacement of their property. All damage, injury or loss to any property caused, directly or indirectly, in whole or in part, by the Contractor, any subcontractor, supplier or any other person or organization directly or indirectly employed by any of them to perform or furnish any of the Work or anyone for whose acts any of them may be liable, shall be remedied by the Contractor, and the Contractor shall be responsible for any direct or indirect costs resulting from such damage, injury or loss.

F. Excavation Safety:

1. In accordance with the provisions of §6705 of the California Labor Code, the Contractor shall submit, in advance of excavation of any trench or trenches five (5) feet or more in depth, a detailed plan showing the design of shoring, bracing, sloping, or other provisions to be made for worker protection from the hazard of caving ground during the excavation of such trench or trenches. If such plans vary from the shoring system standards set forth in the Construction Safety Orders of the Division of Industrial Safety in Title 8, Subchapter 4, Article 6, California Code of Regulations, the plans shall be prepared and signed by a registered civil or structural engineer employed by the Contractor, and all costs therefor shall be included in the price named in the Contract for completion of the work as set forth in the Contract Documents. Nothing in this Section shall be deemed to allow the use of a shoring, bracing, sloping, or other protective system less effective than that required by the Construction Safety Orders. Nothing in this Section shall be construed to impose a tort liability on the District, the Design Engineer, the Construction Manager, nor any of their officers, officials, employees, agents, consultants or volunteers. The District's review of the Contractor's excavation plan is only for general conformance to the Construction Safety Orders.
2. Prior to commencing any excavation, the Contractor shall designate in writing to the Construction Manager the "competent person(s)" with the authority and responsibilities designated in the Construction Safety Orders.

G. Safety Emergencies:

1. In emergencies affecting the safety or protection of persons or the Work or property at the Project Site or adjacent thereto, the Contractor, without special instruction or authorization from the Construction Manager, is obligated to act to prevent threatened damage, injury, or loss. The Contractor shall give the Construction Manager prompt written notice if the Contractor believes that any significant changes in the Work or variations from the Contract Documents have been caused thereby.

H. Safety Violations:

1. Should the Contractor fail to correct an unsafe condition, the District shall have the right to notify the Contractor through the Construction Manager that an unsafe condition may exist and must be corrected or the work in question can be stopped in accordance with Section 00700-8.08, Suspension of Work, until the condition is corrected to the satisfaction of the District. No extension of time or additional compensation will be granted as a result of any stop order so issued. The notification and suspension of such work or the failure to provide such notification and suspension by the District shall not relieve the Contractor of its sole responsibility and liability for safety and the correction of any unsafe conditions.
2. The District shall have the authority to require the removal from the project of any worker and the foreman and/or superintendent in responsible charge of the work where safety violations occur.

I. Equipment Safety Provisions:

1. The completed Work shall include all necessary permanent safety devices, such as machinery guards and similar safety items, required by the State and Federal (OSHA) industrial authorities and applicable local and national codes. Further, any features of the Work, including District-selected equipment, subject to such safety regulations shall be fabricated, furnished, and installed in compliance with these requirements. All equipment furnished shall be grounded and provided guards and protection as required by safety codes. Where vapor-tight or explosion-proof electrical installation is required by safety codes, this shall be provided. Contractors and manufacturers of equipment shall be held responsible for compliance with the requirements included herein. The Contractor shall notify all equipment suppliers and subcontractors of the provisions of this paragraph.

J. Confined Spaces:

1. The Project requires work in confined spaces and requires compliance with Cal/OSHA and Federal OSHA requirements. Confined spaces for the purposes of this Section shall be as defined by the Division of Industrial Safety. Notwithstanding any classifications relative to the Tunnel Safety Orders, work within confined spaces of this project is subject to the definitions and applicable provisions of Section 1950 et. seq., Title 8, Division 1, Chapter 4, Subchapter 4, Article 37 of California Code of Regulations.
2. Entry into existing “permit” confined spaces as defined by OSHA shall be allowed only in compliance with a confined space entry permit program by the Contractor that meets the requirements of Cal/OSHA Sections 1953-1962. While the District (Host Employer) has identified certain existing facilities as confined spaces, other confined spaces may exist on the Project. It shall be the responsibility of the Contractor (Controlling Contractor) to notify the District of unidentified confined spaces, reference Cal/OSHA Section 1952(h) for permit space entry communication and coordination requirements.
3. Sources of ignition, including smoking, shall be prohibited in any confined space, including open cut trenches of any depth.
4. It is anticipated that the Contractor may encounter hazardous conditions within these confined spaces which include, but are not limited to the following:
   a. Exposure to hydrogen sulfide, methane, carbon dioxide and other gases and vapors commonly found in municipal sewers which could have or has the potential of having Immediate Danger to Life or Health Conditions (IDLH).
   b. Exposure to atmosphere containing insufficient oxygen to support human life.
   c. Exposure to combustible, flammable, and/or explosive atmosphere.
   d. Exposure to sewage which may contain bacteriological, chemical, and other constituents harmful to humans.
   e. Work in conditions where engulfment or entrapment may occur.
   f. Work in environments which may be slippery and/or have uneven work surfaces.
   g. Work in structures which have limited and/or restricted access and egress.
   h. Work in structures where workers may trip, slip, and/or fall several feet.

K. Construction Activity Permits:

1. The Contractor must submit a copy of its respective current DOSH permit before beginning work on any the following construction activities:
2. Construction of trenches or excavations which are five feet or deeper and into which a person is required to descend.
3. Construction of any building, structure, scaffolding or falsework more than three stories high or the equivalent height (36 feet).
4. Demolition of any building or structure, or dismantling of scaffolding or falsework more than three stories high or the equivalent height (36 feet).
5. Erection or dismantling of vertical shoring systems more than three stories high, or the equivalent height (36 feet).

12.02 PUBLIC ACCESS, SAFETY AND CONVENIENCE

A. In accordance with the provisions of §6500 of the Labor Code the Contractor shall conduct his work so as to ensure the least possible obstruction to traffic and inconvenience to the general public and the residents in the vicinity of the Work and to ensure the protection of persons and property. No road or street shall be closed to the public except with the permission of the Construction Manager and the proper governmental authority. Fire hydrants on or adjacent to the Work shall be accessible to firefighting equipment. Temporary provisions shall be made by the Contractor to ensure the use of sidewalks, private and public driveways, and proper functioning of gutters, sewer inlets, drainage ditches and culverts, irrigation ditches and natural water courses. To the maximum extent permitted by law, Contractor shall indemnify, hold harmless and defend District from any and all liability, including attorneys' fees and costs of litigation, arising from any failure to comply with this Section by Contractor or its privities.

B. The Contractor shall, at all times, provide for "Public Convenience and Safety", as described in the District's Standard Specifications, OSHA and State of California Safety regulations.

C. The Contractor shall schedule and conduct the work so as to minimize the inconvenience to the public, as well as to District employees at any District facilities and adjoining areas impacted by the work. Any phase of the work which requires disruption of utilities, shall be scheduled three (3) days in advance with the affected parties.

D. The design of the facilities included in this Project has been based on the concept that the structures are not accessible to and usable by the handicapped and the general public. Consequently, stairs, landings, platforms, railings, ladders, exits, and the like, for treatment facilities were designed to conform only to the requirements for industrial use by authorized persons.

E. The Contractor shall have complete responsibility for the work and protection thereof and for preventing injuries to persons and damage to the work, property, and utilities on or about the work until completion and final acceptance thereof. The Contractor shall in no way be relieved of its responsibility by any right of the Engineer to give permission or directions relating to any part of the work, by any such permission or directions given, or by failure of the Engineer to give such permission or directions.

F. The Contractor is prohibited from using a wireless telephone while driving on District business and/or District property unless the vehicle has been equipped with a stationary, hands-free device to enable conversations without the use of one or both of the driver's hands. When operating any vehicle that requires a Class A or B license or a special use certification, the use of cellular phones, radios, or any other communication device, while on District property, is prohibited.

G. Refer to Division 1- General Requirements, for any further requirements on safety procedures to be followed in and about public roadways.

H. The Contractor shall provide and maintain all necessary safety equipment, such as fences, barriers, signs, lights, walkways, guards, and fire-prevention and fire-fighting equipment, and shall take such other action as is required to fulfill its obligations under this Section.

I. Contractor shall make use of slating and screening in any fencing around the job Site or staging area to keep areas reasonably hidden from view.

J. The Contractor shall so conduct its operations as not to close or obstruct any portion of any railroad, highway, road, or other property until permits therefor have been obtained from the governmental or other authorities having jurisdiction thereof. If any of the above are required to be kept open and are damaged or rendered unsafe by the Contractor's operations, the Contractor shall, at its expense, make such repairs and provide such temporary guards, bridges, lights, and other signals as necessary or required for public safety and as will be acceptable to the governmental or other authorities having jurisdiction thereof. Fences that interfere with any work may, upon prior written approval of the District, be removed by the Contractor but must then be restored to their original condition prior to final acceptance. Such removing and restoring shall be by and at the expense of the Contractor.

K. Unless otherwise specifically provided in the Contract, the Contractor shall not do any work that would affect any pipeline, telephone, telegraphic, or electric transmission line, irrigation ditch, or other structure, nor enter

upon the rights-of-way or lands appurtenant thereto, until notified by the owners that the District has obtained proper authority therefor from the owners thereof.

L. Thereafter and before such work begins, the Contractor shall give said owners convenient access and reasonable cooperation in their removing, shoring, supporting, or otherwise protecting such lines, ditches, and structures, and for replacing same.

M. Care shall be exercised by the Contractor to prevent damage to adjacent walks, streets, culverts, and gutters; where equipment will pass over these obstructions, suitable planking shall be placed.

N. The Contractor shall not be entitled to any extension of time or any extra compensation on account of any postponement, interference, or delay caused by any such line, ditch, or structure being on or adjacent to the Site of work, except as provided in this Section 00700-9.02.G, Differing Site Conditions.

O. The Contractor shall preserve and protect all cultivated and planted areas, and vegetation such as trees, plants, shrubs, and grass on or adjacent to the premises, which, as determined by the Engineer, do not reasonably interfere with the performance of work. The Contractor will be held responsible for damage to any such areas and vegetation and for unauthorized cutting of trees and vegetation, including without limitation, damage arising from the performance of its work through operation of equipment or stockpiling of materials. All costs in connection with any repairs or restoration necessary or required by reason of any such damage or unauthorized cutting shall be borne by the Contractor.

P. Adequate warning and construction signs shall be maintained at the construction Site for the safety of the public. Additional signs for the convenience of the public shall be maintained as directed by the District.

Q. The Contractor shall maintain sufficient safeguards against occurrence of accidents, injuries, or damage to any person or property and shall be responsible for same if such occurs. The Contractor shall also maintain adequate protection of its work and materials from destruction and loss and shall protect the District's property from damage arising in connection with this contract, and shall make good any such damage, destruction or loss.

R. Contractor must pave pedestrian openings through falsework or provide full width continuous wood walks and keep all walkways clear. Contractor must protect pedestrians from falling objects and water runoff. Overhead protection for pedestrians must extend not less than four (4) feet beyond the edge of a structure.

S. Contractor's equipment must enter and leave the Project area via access routes designated or accepted in writing by District, and move in the direction of public traffic at all times. All movements on or across public traveled ways must not endanger public traffic.

T. Contractor must immediately remove any spillage, debris, dirt, or mud resulting from hauling operations along or across any public traveled way.

12.03 PROTECTION AND RESTORATION OF PROPERTY

A. California Civil Code §832 provides requirements relating to notification of adjacent property owners (30 Day notification required) and protection of adjacent property when performing excavation that may adversely impact the lateral and subjacent support to adjoining land or structures. In addition to these requirements and any other requirements imposed by law, Contractor must shore up, brace, underpin, and protect as may be necessary, all foundations and other parts of all existing structures adjacent to and adjoining the Site of the Work which are in any way affected by the excavations or other operations connected with the Work pursuant to this Contract. Whenever any notice is required to be furnished by District or Contractor to any adjoining or adjacent landowner or other party before commencement of any Work pursuant to this Contract, Contractor must provide such notice. Contractor must indemnify and hold District harmless from any damages for which District may become liable in consequence of such injury or damage to adjoining or adjacent structures and premises.

B. Contractor must immediately repair, at Contractor’s sole cost and expense, any damage arising from or in consequence of the performance of the Contract, to improvements or property, whether above or below the ground, private or public, within or adjacent to the Project. If, in District's opinion, District's best interests require such repair to be made before execution of any part of the Work included in this Contract, District will so notify Contractor who will delay or discontinue the performance of that part of the Work until the necessary repair has

been made. Such delay shall not be considered unavoidable, and no extension of the Contract Time shall be allowed.

C. When Ordered by District to make any repair, Contractor must start work thereon within four (4) hours and must prosecute the same with diligence to completion. Upon Contractor's failure to comply with such Order, or upon Contractor's failure to make immediate Emergency repairs which are necessary in the best interests of District or the public, District may cause such repairs to be made and deduct the costs thereof from any money due, or that may become due Contractor.

D. In an Emergency affecting the safety of life or property, including adjoining property, Contractor is authorized to act at its discretion, without special instructions or authorization from District, to prevent such threatened loss or injury, and Contractor must act whether or not instructed by District. Contractor must maintain adequate protection against damage to life and property involved in Project and on property adjacent thereto until Acceptance and must Provide all necessary guards, barricades, night lights, facilities, tools, equipment, materials and other needed or required protective devices.

E. Contractor will until Acceptance maintain adequate protection of all its Work and work performed by others pursuant to the Contract Documents from damage, loss, or defacement. Contractor must repair or replace any such damage and remove any damaged or defaced material or equipment from the premises at no extra cost to District except as may be due directly to errors in the Contract Documents or caused by District.

F. The Contractor must ensure the limits of Work to be free of graffiti or other similar defacements during the entire Contract Time; if such defacement occurs, the Contractor must promptly remove, repair, or correct the affected area(s). The Contractor must protect all exposed finished surfaces within the limits of Work (both temporary and final), with anti-graffiti coatings, and maintain such protection continuously during the entire Contract Time.

12.04 PRESERVATION OF CULTURAL RESOURCES

A. Pursuant to the National Historic Preservation Act of 1966, State laws and County ordinances, the following procedures are implemented to ensure historic preservation and fair compensation to Contractor for construction delays that may occur due to cultural resources discoveries.

B. In the event potentially historical, architectural, archaeological or cultural resources (hereinafter "resources") are discovered during subsurface excavations at the Project Site, the following procedures apply:

C. District will issue a "Cultural Resources – Suspend Work Order" Directing Contractor to temporarily suspend all operations at the location of such potential resources.

D. Such "Cultural Resources – Suspend Work Order" will be effective until such time as a qualified Consultant can assess the value of such resources and make recommendations. Any "Cultural Resources – Suspend Work Order" will contain the following:

1. A description of the potential resource, its location, and the area where Contractor's Work is suspended;
2. A description of what part or all of Contractor's Work is suspended;
3. Instructions regarding suspension of orders by Contractor for materials and services;
4. Guidance regarding action to be taken by Subcontractors;
5. Estimated duration of the temporary suspension.

E. If the Consultant determines that the potential find is indeed a cultural resource, District will, as expeditiously as possible, advise Contractor in writing of the action to be taken regarding the find, and the anticipated time frame and extent of any Work suspension.

F. Adjustment of Contract Time and Contract Sum

1. If, in the Notice Inviting Bids, the Work Site was deemed "Archaeologically Sensitive", then the Contract Time(s) includes five (5) work days of temporary suspension for cultural resources finds and there will be no payment for such suspension or any inefficiencies related thereto, up to a maximum cumulative duration of five (5) work days delay to the Critical Path(s) of the Official Progress Schedule. If such suspension occurs, the first five (5) work days of the Critical Path delay will be treated as an excusable non-compensable delay and the Contract Time will be extended in accordance with Section 00700-8.04, Time Extensions.

2. If a cultural discovery at an Archaeologically Sensitive Site results in a cumulative Critical Path delay that exceeds five (5) work days, then Contractor will be entitled to an adjustment of the Contract for the Critical Path delay in excess of five (5) work days. The Critical Path delay in excess of five (5) work days will be treated as an excusable compensable delay and the Contract Time will be extended in accordance with Section 00700-8.04, Time Extensions.
3. If a cultural resource discovery was unforeseen (i.e. if the Work Site was not deemed "Archaeologically Sensitive" in the Notice Inviting Bids), Contractor may be entitled to an adjustment of the Contract in accordance with Section 00700-8.04, Time Extensions.
4. If, as a result of a temporary suspension, District agrees that Contractor sustains a loss which could not have been avoided by judicious handling of its forces or equipment, or by redirection of forces or equipment to perform other Work on the Contract, Contractor will be paid for idle time of equipment and labor by Force Account as provided in Section 00700-9.02.D, Field Order- Force Account Work.

G. Documentation:

1. Beginning with the first Day of suspension, and for each following Day, Contractor must maintain detailed hourly records of the labor and equipment idled by such suspension, plus substantiation as to why such labor and equipment could not be used on other parts of the Work if such were the case. Such records must be of a form acceptable to District, signed by Contractor, and are subject to verification by District.
2. Failure by Contractor to furnish the aforesaid records constitutes a waiver of Contractor's right to an adjustment in the Contract Sum.

****END ARTICLE 12****

## ARTICLE 13 - INSURANCE AND INDEMNIFICATION

13.01 INSURANCE

Contractor shall maintain, at its own expense, all the insurance required by this article and submit coverage verification for approval by the District prior to the District's execution of the Agreement.

The Agreement will not be executed by the District, and the Contractor shall not commence Work, until such insurance has been approved by the District. Such insurance shall remain in full force and effect at all times during the prosecution of the Work and until the Final Completion thereof. In addition, the commercial general liability insurance shall be maintained for a minimum of three (3) years after Final Completion of the Work. The District's issuance of the Notice to Proceed does not relieve the Contractor of the duty to obtain such insurance as required herein.

The Contractor shall not allow any subcontractor to commence work on its subcontract until all similar insurance required of the subcontractor has been obtained and verified by the Contractor and submitted to the Construction Manager for the District's review and records. Subcontractors shall furnish original certificates and required endorsements as verification of insurance coverage. At a minimum amount of coverage, the insurance liability limits specified in Article 13.01 herein, shall apply for all subcontractors who execute a subcontract with the Contractor for portions of the Work.

Insurance is to be placed with insurers with a current A.M. Best's rating of no less than A-:VII or equivalent and that are admitted to and authorized to do business and in good standing in California, unless otherwise approved by the District. In the case of workers' compensation and employer's liability insurance, coverage provided by the California State Compensation Insurance Fund is acceptable.

Each insurance policy required by the this article shall be endorsed to state that coverage shall not be suspended, voided, canceled by either party, or reduced in coverage or in limits except after thirty (30) days prior written notice has been given to the District by the insurance carrier. Should the insurance carrier refuse to provide this notice, the Contractor shall be obligated to provide to the District thirty (30) days prior written notice of any insurance coverage being suspended, voided, reduced or canceled by either party, or any reduction in coverage or in limits.

The Contractor shall include all costs for insurance in its Total Bid Price.

Nothing contained in these insurance requirements is to be construed as limiting the extent of the Contractor's responsibility for payment of damages resulting from its operations under the Contract Documents. For any claims related to Contractor's Work, as opposed to work District has contracted to parties other than Contractor, the Contractor's insurance coverage shall be primary insurance as respects the District, Construction Manager, Engineer, Funding Agencies and their directors, officers, elected officials, employees, agents, consultants, attorneys, divisions, related agencies and entities, successors and assigns, contractors and representatives, and volunteers. For any claims related to Contractor's Work, any insurance or self-insurance maintained by the District, Construction Manager, Engineer, Funding Agencies and their directors, elected officials, officers, officials, employees, agents, consultants, attorneys, divisions, related agencies and entities, successors and assigns, contractors and representatives, or volunteers shall be in excess of the Contractor's insurance and shall not contribute with it.

All insurance coverage maintained or procured pursuant to this Contract shall be endorsed to waive subrogation against the District, Construction Manager, Engineer, Funding Agencies, and their directors, officers, elected officials, employees, agents, attorneys, divisions, related agencies and entities, successors and assigns, contractors and representatives, and volunteers or shall specifically allow Contractor - or others providing insurance evidence in compliance with these specifications - to waive their right of recovery prior to a loss. Contractor hereby waives its own right of recovery against the District, Construction Manager, Engineer, Funding Agencies, and their directors, officers, elected officials, employees, agents, attorneys, divisions, related agencies and entities, successors and assigns, contractors and representatives, and volunteers, and shall require similar written express waivers and insurance clauses from each of its subcontractors. Copies of these waivers shall be submitted to the District prior to commencement of work.

Any failure of the Contractor to comply with reporting or other provisions of the policies including breaches of warranties shall not affect coverage provided to the District, Construction Manager, Engineer, Funding Agencies and their directors, elected officials, officers, officials, employees, agents, consultants, attorneys, divisions, related agencies and entities, successors and assigns, contractors and representatives, or volunteers.

The Contractor shall take out, pay for, and maintain throughout the duration of the Contract and for such additional periods as more specifically required herein the following insurance against claims for injuries to persons or damages to property which may be caused by the performance of the Work hereunder by the Contractor, the Contractor's agents, representatives, employees or subcontractors, or from operations under the Agreement.

A. Commercial General Liability and Automobile Liability Insurance – This insurance shall protect the Contractor from claims for bodily injury, personal injury and property damage which may be caused by the performance of the Work hereunder by the Contractor, the Contractor's agents, representatives, employees or subcontractors, or from operations under the Contract Documents. The commercial general liability insurance shall be maintained for three (3) years after Final Completion of the Work and shall provide coverage on an occurrence basis.

1. Additional Insureds – The commercial general liability and automobile policies of insurance shall include as additional insureds or be endorsed to contain the following provisions: the District, Construction Manager, Engineer, Funding Agencies and their directors, elected officials, officers, officials, employees, agents, consultants and volunteers are to be covered as additional insureds as respects: liability arising out of activities performed by or on behalf of the Contractor; products and completed operations of the Contractor; premises owned, occupied or used by the Contractor and or automobiles owned, leased, hired or borrowed by the Contractor. The coverage shall contain no special limitation on the scope of protection afforded to the District, Construction Manager, Engineer, Funding Agency, Design Engineer, and their directors, elected officials, officers, officials, employees, agents, consultants, attorneys, divisions, related agencies and entities, successors and assigns, contractors and representatives, or volunteers and coverage provided to such additional insured. This policy shall provide coverage to each of the said additional insureds with respect to said work. Said policy shall provide primary coverage to the full limit of liability stated in the declarations.

2. Amount of Coverage (General Contractor) – The bodily injury, personal injury and property damage liability of the Commercial General Liability insurance shall provide coverage in the following minimum limits of liability: $5,000,000 on account of any one occurrence for bodily injury and property damage, $5,000,000 personal and advertising injury limit with an annual general aggregate limit of not less than $10,000,000, and $5,000,000 products and completed operations aggregate, combined single limit, with excess coverage of $10,000,000 per occurrence and in the aggregate. The Automobile Liability insurance policy shall be at least as broad as ISO CA 00 01 (Any Auto) and provide minimum limits of $5,000,000 per accident as a combined single limit arising out of the ownership, maintenance, or use of any owned or non-owned vehicles, with excess coverage of $10,000,000 per occurrence and in the aggregate, including coverage for products and completed operation. Any deductibles or self-insured retentions must be declared to and approved by the District.

3. Minimum Amount of Coverage for all Listed Subcontractors included in Bid Form Attachment D - The bodily injury, personal injury and property damage liability of the Commercial General Liability insurance shall provide coverage in the following limits of liability: $2,000,000 on account of any one occurrence for bodily injury and property damage, $4,000,000 personal and advertising injury limit with an annual general aggregate limit of not less than $4,000,000, and $2,000,000 products and completed operations aggregate, combined single limit. The Automobile Liability insurance policy shall provide minimum limits of $1,000,000 per accident as a combined single limit arising out of the ownership, maintenance, or use of any owned or non-owned vehicles. These minimum amounts of insurance coverage do not preclude the Contractor from requiring higher limits or additional insurance coverage as it deems necessary.

4. Minimum Amount of Coverage for Subcontractors NOT included in Bid Form Attachment D - The bodily injury, personal injury and property damage liability of the Commercial General Liability insurance shall provide coverage in the following limits of liability: $2,000,000 on account of any one occurrence for bodily injury and property damage, $1,000,000 personal and advertising injury limit with an annual general aggregate limit of not less than $2,000,000, and $1,000,000 products and completed operations aggregate,

combined single limit. The Automobile Liability insurance policy shall provide minimum limits of $1,000,000 per accident as a combined single limit arising out of the ownership, maintenance, or use of any owned or non-owned vehicles. These minimum amounts of insurance coverage do not preclude the Contractor from requiring higher limits or additional insurance coverage as it deems necessary.

5. Subcontractors – The bodily injury and property damage liability insurance shall not be deemed to require the Contractor to have its subcontractors named as additional insureds in the Contractor's policy, but the policy shall protect the Contractor from contingent liability which may arise from operations of its subcontractors.

6. Included Coverage – The above commercial general liability insurance shall be at least as broad as the most current ISO CGL Form 00 01 including, but not limited to, also include the following coverages:

- Premises – Operations.
- Independent Contractors.
- Products - Completed Operations.
- Personal Injury - False Arrest, Libel, Wrongful Eviction, etc.
- Advertising Injury.
- Broad Form Property Damage - Including, Completed Operations.
- Separation of Insureds/Cross-Liability Provision.
- Duty to Defend all Insureds.
- Deletion of any Limitation on Coverage for Bodily Injury or Property Damage Arising out of Subsidence or Soil or Earth Movement.
- Additional Insured Coverage Not Limited to Vicarious Liability – Insurance coverage for additional insureds shall be for all covered acts and occurrences, whether or not they arise out of, or result from, the Contractor's own acts or omissions in performing the Work.
- Separate Aggregate – A provision that the annual general aggregate shall apply separately to each project for which Contractor provides services away from premises owned by or rented to Contractor.
- XCU – Explosion, Collapse, Underground Damage.
- Blanket Contractual Liability – Provisions or endorsements shall state that the insurance, subject to all of its other terms and conditions, applies to the liability assumed by the Contractor under the Agreement, including, without limitation, insurable liabilities set forth in the indemnity articles of the Contract Documents.

7. Umbrella Policy – The Contractor may use an umbrella or excess policy to meet the limits requirement of Article 13.1.1.B, and subcontractors may use an umbrella or excess policy to meet the limit of requirements of Article 13.1.1.C. However, any such umbrella/excess policy must be approved by the District and maintain an A.M. Best Rating of no less than A:VII.

B. Workers' Compensation Insurance – In accordance with the provisions of Article 5, Chapter 1, Part 7, Division 2 (commencing with Section 1860) and Chapter 4, Part 1, Division 4 (commencing with Section 3700) of the Labor Code of the State of California, the Contractor is required to secure the payment of compensation to its employees and for that purpose obtain and keep in effect adequate Workers' Compensation Insurance. In accordance with California Labor Code Section 1861, the Contractor shall sign and include Section 00560, Workers Compensation Insurance Certificate, with the Contract. If the Contractor, in the sole discretion of the

District, satisfies the District of its responsibility and capacity under the applicable Workers' Compensation Laws, if any, to act as self-insurer, the Contractor may so act, and in such case, the insurance required by this article need not be provided.

The Contractor is advised of the provisions of Section 3700 of the Labor Code, which require every employer to be insured against liability for workers' compensation or to undertake self-insurance in accordance with the provisions of that code, and shall comply with such provisions and have employers' liability limits of $1,000,000 per accident and per employee, and in the aggregate for injury by disease, before commencing the performance of the Work of this Agreement.

Before the Notice to Proceed with the Work under this Contract is issued, the Contractor shall submit written evidence that the Contractor has obtained for the period of the contract workers' compensation and employer's liability insurance as required for all persons whom it employs or may employ in carrying out the Work under this Agreement. Such evidence of coverage shall be accompanied by an endorsement from the insurer agreeing to waive all rights of subrogation against the District, Construction Manager, Engineer, Funding Agencies and their directors, elected officials, officers, officials, employees, agents, consultants, attorneys, divisions, related agencies and entities, successors and assigns, contractors and representatives, and volunteers which might arise by reason of any payment under the policy. This insurance shall be in accordance with the requirements of the most current and applicable State Workers' Compensation Insurance Laws.

C. Professional Liability Insurance – All submittals required of the Contractor which are to be prepared by a licensed California engineer shall be prepared only by a licensed engineer who is covered by a professional liability insurance policy issued by a California-admitted carrier or a carrier authorized to do business in California with a Best's rating of A-:VII or better, with an limit per claim of at least $1,000,000, and a $2,000,000 in the aggregate for errors and omissions. Such insurance shall be maintained in effect by said engineer at all times while performing Work on the Project and for at least three (3) years after Final Completion of the Project. Contractor shall submit an insurance certificate for such engineer prior to beginning Work for approval by the District.

D. Builder's Risk Insurance – Until the completion and final acceptance by District of all the Work under and implied by this Contract, the Work shall be under the Contractor's responsible care and charge. The Contractor shall rebuild, repair, restore, and make good all injuries, damages, re-erections, and repairs occasioned or rendered necessary by causes of any nature whatsoever. Contractor shall provide "Special Form" Builder's Risk Insurance on the replacement cost basis as listed below:

Amount of Coverage - Equal to the full replacement cost of the Work on a completed value basis, without deduction for depreciation and shall also provide coverage for "soft costs" such as but not limited to design and engineering fees and inspection costs caused by an insured peril, up to a maximum total for all soft costs of $500,000. The builder's risk insurance may contain sub-limits not less than the following:

- Debris removal - $250,000.
- Pollution Clean-up cost - $25,000.

Additional Insureds/Loss Payees - This insurance shall name the District, Engineer, Construction Manager, the Funding Agencies and Contractor as insureds/loss payees, as their interests may appear. Builder's risk insurance policies shall contain the following provisions:

1. The District, Engineer, Design Engineer, Construction Manager, Contractor and subcontractors of every tier shall be named as insureds.
2. Each insured shall waive all rights of subrogation against each of the other insureds.

Included Coverage – The above builder's risk insurance shall include the following coverages:

1. Including, but not by way of limitation, for all damages of loss to the Work and to appurtenances, to materials and equipment to be incorporated into the Project while the same are in transit, stored on or off the Site, to construction plant and temporary structures.
2. Such insurance shall cover, but shall not be limited to, the perils of fire, lightning, windstorm, hail, explosion, riot, riot attending a strike, civil commotion, smoke damage, damage by aircraft or vehicles, vandalism and malicious mischief, theft, collapse, and flood.

3. The policy shall cover the costs of debris removal, including demolition as may be made reasonably necessary by the application of any law, ordinance, or regulation.
4. Start-up & testing, and machinery breakdown including electrical arching which are very important coverages and usually have to be requested.
5. Consequential losses due to delay in completing the Work. The builder's risk insurance limit for consequential losses is $1,000,000.
6. The policy shall provide the District the right to occupy the premises without termination of the policy until Final Completion of the Project.

Deductibles - Builder's risk insurance may have a deductible clause not to exceed the amounts below. Contractor shall be responsible for paying any and all deductible costs.

All Other Perils - $50,000.

Application of Loss Proceeds - In the event of a covered loss, proceeds of builder's risk insurance shall be applied first to reimburse actual costs of demolition, debris removal, reconstruction, and repair or replacement incurred in the discharge of the Contractor's obligations of repair or replacement under this Contract. Insurance proceeds shall be deposited in a separate account in a local bank satisfactory to the District and shall be withdrawn only with the District's written approval to reimburse such actual costs as the builder's risk carrier has agreed to reimburse. The District shall have no liability for failure of the builder's risk carrier to pay for any particular cost of repairs. In the event of the termination of the Contractor for default, the Contractor shall forfeit all rights to builder's risk insurance proceeds and District may expend such proceeds to complete the Project as if they were unpaid contract monies.

E. Contractor's Pollution Liability Insurance. The Contractor shall obtain Pollution Liability Insurance. This insurance shall be written in comprehensive form either as a separate policy or as an endorsement to Contractor's general liability coverage and shall cover liability for bodily injury, property damage, and environmental damage resulting from pollution and related cleanup costs incurred, all arising out of any Work to be performed under the Agreement, including liability for and defense of lawsuits and regulatory actions. Coverage shall be provided for both Work performed on Site, as well as during the transport of hazardous materials. Coverage shall apply to sudden as well as gradual pollution conditions, including without limitation conditions resulting from the escape or release of smoke, vapors, fumes, acids, alkalis, toxic chemicals, liquids, or gases, natural gas, waste materials, or other irritants, contaminants, or pollutants, including asbestos. The liability limits shall be not less than:

- Combined Single Limit for each occurrence: $2,000,000.
- General Aggregate: $2,000,000.

If the coverage required is written on a claims-made coverage form:

- The retroactive date must be shown, and this date must be before the award date of the Agreement.
- Insurance must be maintained, and evidence of insurance must be provided for at least five (5) years after final payment.
- If coverage is canceled or non-renewed, and not replaced with another claims-made policy form with a retroactive date prior to the Agreement award date, the Contractor must purchase extended reporting period coverage for a minimum of five (5) years after Final Payment.
- A copy of the claims reporting requirements must be submitted to the District for review.

F. Proof of Coverage – Before execution of the Contract, the Contractor shall furnish the District with certificate(s) evidencing issuance of all insurance mentioned herein, copies of the policy declaration or information page(s) and additional insured endorsements. The certificate(s) and endorsements for each insurance policy are to be signed by a person authorized by that insurer to bind coverage on its behalf. The endorsements are to be on endorsement forms acceptable to the District. The certificate(s), policy declaration or information page(s), and endorsements are to be received and approved by the District before Work commences. Except for the waiver of subrogation rights endorsements, as required herein, no other endorsements are required for workers

compensation or excess liability insurance. Such certificates of insurance shall provide that the insurance policy shall be endorsed to state that coverage shall not be suspended, voided, cancelled by either party, reduced in coverage or limits except after thirty (30) days prior written notice has been given to the District. The Contractor shall also provide certificate(s) evidencing renewals of all insurance required herein prior to the expiration date of any such insurance. The District reserves the right to require complete, certified copies of all required insurance policies, at any time.

For all insurance policy renewals during the term of this Contract, Contractor shall send insurance certificates reflecting the policy renewals directly to the Sausalito-Marin City Sanitary District
1 East Road, Sausalito, California 94965.

Any deductibles or self-insured retentions must be declared to and approved by the District. At the option of the District, either:

- The insurer shall reduce or eliminate such deductibles or self-insured retentions as respects the District, Construction Manager, Engineer, Funding Agencies and their directors, elected officials, officers, officials, employees, agents, consultants, attorneys, divisions, related agencies and entities, successors and assigns, contractors and representatives, and volunteers; or

- The Contractor shall procure a bond guaranteeing payment of losses and related investigations, claim administration and defense expenses.

In the event of the breach of any provision of this article, or in the event of any notices received which indicates any required insurance coverage will be diminished or canceled, District, at its option, may, notwithstanding any other provisions of this Agreement to the contrary, declare a material breach of this Agreement and suspend all further work pursuant to this Agreement until Contractor has provided evidence that its insurance coverage meets the requirements of the Contract Documents.

G. Third Party Insurance Requirements - The Work, as contemplated by the Contract Documents does specifically require an encroachment permit(s) from other public agencies, railroads, and/or utilities. Contractor shall ensure that the insurance it obtains in accordance therewith complies with all requirements mandated by each permitting agency from whom permits shall be obtained for the Work and any other third parties from whom third party agreements are necessary to perform the Work (collectively, the "Third Party(ies)"). To the extent there is a conflict between the Third Party(ies)'s Insurance Requirements and those set forth by the District herein, the requirement(s) providing the more protective coverage for both the District and the Third Party(ies) shall control and be purchased and maintained by Contractor.

Contractor shall be responsible to determine what insurance requirements exist as a condition precedent to obtaining permit(s) for the Work, if any. Contractor shall be solely responsible for any delay(s) arising from its failure and/or its subcontractors' failure to timely obtain all required insurance.

All required third party insurance shall be submitted to the District at the same time Contractor submits all other contractually required insurance, which is no later than ten (10) days after Notice of Intent to Award, unless otherwise agreed to in writing by the District prior to this deadline.

H. Insurance During Guarantee Period - For all work the Contractor or its subcontractors perform during the guarantee period, workers compensation and commercial general liability insurance in the amounts and format required herein shall remain in force and be maintained for three (3) years after Final Completion of the Work.

The Contractor shall be responsible for paying any and all deductible costs for claims against its workers compensation and commercial general liability insurance.

13.02 GENERAL INDEMNIFICATION OBLIGATIONS

A. The Contractor shall indemnify, defend with counsel acceptable to District, and hold harmless to the full extent permitted by law, at the Contractor's expense, the District, and their directors, elected officials, officers, officials, employees, agents, consultants, design engineers, Funding Agencies and each of them (collectively the "Indemnified Parties"), from and against any and all liability, loss, damage, claims,

actions, causes of action, expenses and costs (including, without limitation, reasonable District staff attorney fees and outside attorney fees, and costs and fees of litigation) (collectively, "Liability") of every nature to the extent caused by Contractor's negligent performance of the Work under this Agreement or its failure to comply with any of its obligations contained in this Agreement, except that such obligation to defend and indemnify does not apply to the extent such Liability was caused by the active negligence, sole negligence or willful misconduct of the Indemnified Parties. Such indemnification by the Contractor shall include, but not be limited to, the following:

1. Liability or claims resulting directly or indirectly from the negligence or carelessness of the Contractor, its subcontractors, employees, or agents in the performance of the Work, or in guarding or maintaining the same, or from any improper materials, implements, or appliances used in its construction, or by or on account of any act or omission of the Contractor, its employees, or agents;

2. Liability or claims arising directly or indirectly from Contractor's negligent acts that cause bodily injury, occupational sickness or disease, or death of the Contractor's, or supplier's own employees, or agents engaged in the Work resulting in actions brought against the Indemnified Parties;

3. Liability or claims arising directly or indirectly from or based on the violation of any laws or regulations, whether by the Contractor, its subcontractors, employees, or agents;

4. Liability or claims arising directly or indirectly from the negligent or legally unauthorized use or manufacture by the Contractor, its subcontractors, employees, or agents in the performance of this Agreement of any copyrighted or uncopyrighted composition, secret process, patented or unpatented invention, article, or appliance, unless otherwise specified stipulated in this Agreement.

5. Liability or claims arising directly or indirectly from the breach of any warranties, whether express or implied, made to the District or any other parties by the Contractor, its subcontractors, employees, or agents;

6. Liability or claims arising directly or indirectly from the willful misconduct of the Contractor, its subcontractors, employees, or agents;

7. Liability or claims arising directly or indirectly from any breach of the obligations assumed in this Agreement by the Contractor;

8. Liability or claims arising directly or indirectly from, relating to, or resulting from a hazardous condition created by the Contractor, subcontractors, suppliers, or any of their employees or agents due to Contractor's negligence or breach of any obligation in this Agreement;

9. Liability or claims arising directly, or indirectly, or consequentially out of any action, legal or equitable, brought against the Indemnified Parties, their consultants, subconsultants, and the directors, officers, elected officials, employees, agents and volunteers of each or any of them, to the extent caused by the Contractor's negligent or improper use of any premises acquired by permits, rights of way, or easements, the Site, or any land or area contiguous hereto or its performance of the Work thereon;

10. Liability arising directly or indirectly from exposure to hazards in violation of the California Labor Code that may be asserted by any person or entity, including, but not limited to, the Contractor, arising out of or in connection with the negligent activities of the Contractor, its agents, employees or privities pursuant to this Agreement, whether or not there is concurrent negligence on the part of the Indemnified Parties;

11. Liability or claims arising directly or indirectly from the failure of the Contractor to comply with the Section 01560, Environmental Mitigation and Monitoring Requirements, Section 01140, Work

Sequence and Constraints or Section 01410, Regulatory Requirements and Permits; and

12. Liability or claims arising out of the Contractor's performance of the Work.

B. The Contractor shall reimburse the Indemnified Parties for all costs and expenses, (including but not limited to reasonable fees and charges of engineers, architects, attorneys, and other consultants and professionals and court costs of appeal) incurred by said Indemnified Parties arising out of or in enforcing the provisions of this article.

C. The indemnification obligation under this Article 13.02 shall not be limited in any way by any limitation on the amount or type of insurance carried by Contractor or by the amount or type of damages, compensation, or benefits payable by or for the Contractor or any subcontractor or other person or organization under workers' compensation acts, disability benefit acts, or other employee benefit acts.

D. Pursuant to California Public Contract Code Section 9201, District shall timely notify Contractor of receipt of any third-party claim relating to this Contract.

E. The Contractor's obligations pursuant to this provision will survive the expiration or earlier termination of this Agreement.

F. The Contractor hereby agrees at its expense promptly to assume the defense of and to defend, with counsel acceptable to the District, against any indemnified Claim, suit or other proceeding brought thereon, and promptly to pay any and all costs, charges, attorney's fees, and other expenses and any and all judgments that may be incurred against the District, and each elected officials, officers, representatives, agents, consultants, design engineers or employees, or any of them to the extent arising from any negligent act, error, or omission, or from any willful misconduct of the Contractor in the performance of the Contractor's obligations under this Agreement.

G. The only limitations on this provision shall be those imposed by Civil Code section 2782.

13.03 HAZARDOUS SUBSTANCE INDEMNIFICATIONS OBLIGATIONS

Neither the Contractor nor its subcontractors or suppliers shall use, generate, manufacture, store or dispose of on, under or about the Site, or transport to, from, along or across the Site, any flammable, explosive radioactive material, toxic substance, hazardous waste, hazardous material, hazardous substance, or the equivalent, as those terms may now or in the future be defined by common practice or by any federal, state or local statute, ordinance or regulation or any governmental body or agency (hereinafter "Hazardous Substance").

A. Without limiting any remedies the District may have, in the event any disposal, release, discharge or spill of a Hazardous Substance or other contamination occurs within the Site at any time during, or as a result of, the Contractor's use of the Site, except such spills or contamination to the extent directly caused by the sole negligence or willful misconduct of the District, its contractors, officers, representatives, agents, consultants, design engineers or employees, the Contractor shall immediately notify District and take all action to mitigate the effects of such disposal, release, discharge, spill or contamination. The Contractor shall at the Contractor's own expense, unless otherwise directed by the District, remediate such disposal, release, discharge of spill or contamination in compliance with all applicable laws, rules and regulations. The District shall have the option to perform the remediation itself or through any contractor if the Contractor fails to do so. The Contractor shall cooperate with the District to complete the remediation and shall reimburse the District for all costs and expenses incurred in connection with the remediation.

B. In the event that the Contractor observes any material that the Contractor believes or has reason to believe may be a Hazardous Substance or encounters any unknown physical condition of any unusual nature within the Site, other than disposals, releases, discharges, spills or contamination covered in paragraph A, above, the Contractor shall, without disturbing the condition, immediately cease all use of the Site and notify the District. The District shall investigate the condition and take any clean-up or other remedial action District deems necessary in its sole discretion.

C. In the event the District or its contractor elects to perform remediation work, the Contractor shall upon notice from the District, cease use of the Site as directed in the notice. The District will notify the Contractor when the condition has been resolved, at which time, but not before, the Contractor may resume its use of the Site.

D. The Contractor agrees to assume liability for and to defend and hold harmless the Indemnified Parties from and against all injuries or death to any person and damage to any property, and all related expense, including without limitation attorneys' fees, investigators' fees, administrative charges, litigation expenses and any judgments, fines, penalties or other charges assessed against Indemnified Parties, resulting from the Contractor's failure to comply with this article and any laws, rules or regulations concerning the subject matter hereof. The provisions of this article shall survive the expiration and termination of this Agreement.

The obligations and liabilities arising under the Article 13.03, HAZARDOUS SUBSTANCE INDEMNIFICATIONS OBLIGATIONS, shall be in addition to and independent of those obligations and/or liabilities arising under the other provisions of this Agreement and shall in no way limit, alter, reduce or eliminate the effect of such other provisions.

****END ARTICLE 13****

## ARTICLE 14 - UNDERCOVERING AND CORRECTION WORK

14.01 GENERAL

A. The Contractor must notify the Construction Manager two (2) days prior to covering any Work.

B. If a portion of the Work is covered prior to Construction Manager's review, it must, if requested in writing by the Construction Manager, be uncovered for Construction Manager observation and replaced at the Contractor's expense without change in the Contract Time.

14.02 CORRECTION OF WORK AND CORRECTIVE ACTION PLANS

A. The Contractor must promptly correct Work rejected by Construction Manager or Work failing to conform to the requirements of the Contract Documents, whether or not Fabricated, Installed or completed, even if such non-conforming Work was previously inspected or approved by the District or the Construction Manager. The Contractor bears the costs of correcting such rejected Work, including additional testing and inspections required, and compensation for District provided services and expenses made necessary thereby.

B. The Contractor may take one of two actions to remediate Work that does not conform to the Contract Documents:

1. Contractor may, at his own expense, remove defective Work and install Work that complies with the Contract Documents;
2. Contractor may develop and submit to Construction Manager, as a Submittal (not an RFI), a Corrective Action Plan (CAP). The CAP describes possible solution(s) to address the defective Work including "work-arounds" that would leave the defective Work in place. To facilitate the District's review and possible acceptance of the CAP the Contractor may employ the services of a licensed Engineer or Architect to develop, sign and stamp the CAP for submission to the District.
    a. Alternatively, the Contract may submit a CAP that is more general in description and substance and leave it to the Design Engineer to evaluate and develop a formal solution. The Contractor shall compensate the Design Engineer for costs incurred via District issuance of a deductive change order to the Contract.
3. In the event the District determines that a practical solution is not available that would enable the defective Work to be left in place, then the Contractor must remove the defective Work and build per the Contract Documents.

C. Notwithstanding Section 00700-14.02.A, in the event of an Emergency constituting an immediate hazard to the health or safety of District's employees, agents, representatives, property, or licensees, District may undertake, at the Contractor's expense and without prior notice, all work necessary to correct such hazardous condition(s) when it was caused by work of the Contractor not being in accordance with requirements of the Contract Documents.

D. The Contractor must remove from the Project Site portions of the Work that are not in accordance with the requirements of the Contract Documents, and are neither corrected by the Contractor nor accepted by the District.

E. If the Contractor fails to correct nonconforming Work, as per Section 00700-14.02.A, or fails to remove nonconforming work, as per Section 00700-14.02.C, District may correct or remove the nonconforming Work per Section 00700-14.02.E.

F. If the Contractor does not submit a Corrective Action Plan or proceed with correction or removal of nonconforming Work, within such time fixed by the Contract Documents or written notice from Construction Manager, the District may remove and store the salvable materials, articles and/or equipment at the Contractor's expense. If the Contractor does not pay all costs of such removal and storage within fourteen (14) Days after written notice, District may, upon fourteen (14) additional Days written notice, sell such materials articles and/or equipment at an auction or private sale, and shall account for the proceeds thereof, after deducting costs and damages that would have been borne by the Contractor, including compensation for District services and expenses made necessary thereby. If the proceeds of a sale do not cover all costs that the Contractor would

have borne, the Contract Sum will be reduced by the deficiency. If payments then or thereafter due the Contractor are not sufficient to cover such amount, the Contractor must pay the difference to District.

G. The Contractor bears the cost of correcting destroyed or damaged Work, which is caused by the Contractor's correction, or removal of Work that is not in accordance with requirements of the Contract Documents, including work performed by District or separate contractors that is damaged or destroyed by the Contractor during the Contract Time or Guarantee period.

H. Nothing contained in this Section 00700-14.02, Correction of the Work and Correction Action Plans, establishes a period of limitation with respect to other obligations that the Contractor might have in the Contract Documents. Establishment of the Warranty/Guarantee period(s), as described in Section 00700-15.12, Warranties & Guarantees, relates only to the specific obligation of the Contractor to correct the Work, and has no relationship to the time within which the obligation to comply with requirements of the Contract Documents may be sought to be enforced, nor to the time within which proceedings may be commenced to establish the Contractor's liability with respect to the Contractor's obligations other than specifically to correct the Work.

14.03 ACCEPTANCE OF NONCONFORMING WORK

A. If District prefers to accept any or all of the Work that is not in accordance with requirements of the Contract Documents, District may do so instead of requiring its correction and/or removal, in which case the Contract Sum will be reduced as appropriate and equitable. Such adjustment shall be effected whether or not Final Payment to the Contractor has been made.

****END ARTICLE 14****

## ARTICLE 15 - FINAL COMPLETION AND ACCEPTANCE

15.01 USE BEFORE ACCEPTANCE

A. District has the right to utilize or place into service any item of equipment or other usable portion of the Work before Final Acceptance of the entire Project. Whenever District plans to exercise said right, District's Authorized Representative will notify Contractor in writing, identifying the specific portion or portions of the Work to be so utilized or otherwise placed into service, hereinafter referred to as "Use Before Acceptance".

B. Until District's Authorized Representative issues such written notification, Contractor is responsible for all care and maintenance of all items or portions of the Work.

C. Upon District's issuance of written notice of Use Before Acceptance, District accepts responsibility for the protection and maintenance of all such items or portions of the Work described in the written notice, excepting any injury or damage resulting from Contractor's actions or negligence.

D. If, by reason of District's Use Before Acceptance, the premium for the Contractor's bodily injury and property damage insurance is increased, District will reimburse the Contractor for the additional amount necessarily incurred, allocable to the area and the period of District's occupancy, up to the Date of Acceptance of the Work.

E. District's Use Before Acceptance does not constitute Acceptance of the Work, or any portion of the Work, by District, nor will it relieve the Contractor of responsibility for correcting defective and/or Deficient Work or materials found at any time before Acceptance of the Work or during the Guarantee period after District's Acceptance. However, when the Project includes separate buildings, and one or more of the buildings is entirely occupied by District, then upon written request by the Contractor and by written consent from District, the Guarantee period on the building entirely occupied by District will commence to run from the date of District occupancy of such building or buildings.

F. Notwithstanding any Use Before Acceptance, Contractor retains full responsibility for fulfillment of all the requirements of the Contract Documents.

G. Should the District elect to partially occupy or use portions of the Work prior to Acceptance, Contractor must perform final cleaning for those portions of the Work prior to their being so occupied or used.

15.02 CONTRACTOR'S RESPONSIBILITY TO MANAGE INCOMPLETE AND DEFICIENT WORK

A. Pursuant to Section 01450, Quality Control and Inspections, the Contractor is responsible for identifying and managing Incomplete and Deficient work. Incomplete and Deficient work includes, but is not limited to: non-compliance items, re-work items, and non-conforming tests, pursuant to Section 01450; deficiencies relating to inspections by the Building Official if applicable to this Contract; and items of work not complete per the Contract Documents.

B. The Preliminary Final Inspection and Final Inspection will not be conducted until:

1. The entire Work of the Milestone/Project is complete;
2. Cleaning and waste management has occurred pursuant to the Contract Documents; and
3. Deficient Work identified in all outstanding non-compliance notices has been corrected.

C. For each completion Milestone, Contractor must include activities for conducting the Preliminary Final Inspection, completion of Punch-list, and Final Inspection, in Contractor's Progress Schedule.

15.03 COMPLETION OF INTERMEDIATE MILESTONES

A. When the Construction Manager determines that all Work of a Milestone is complete, including cleaning, the Construction Manager must so certify to the District's Representative and request a Preliminary Final Inspection, pursuant to Section 01450, Quality Control and Inspections.

B. If the Contract Documents include a Milestone for the completion of the entire Work of the Project, three (3) copies of the Milestone Completion certification must be submitted concurrently with the Contractor's certification that all the Work of the Project is complete as required by Section 00700-15.03.A.

15.04 PRELIMINARY FINAL INSPECTION FOR INTERMEDIATE MILESTONE(S)

A. Within seven (7) Days of receipt of Construction Manager's certification that all Work of a Milestone is complete, District's Authorized Representative, Project Inspector, Architect of Record, and other staff, will conduct a Preliminary Final Inspection with the Construction Manager and the Project Superintendent.

B. If District's Representative determines that, based on the results of the Preliminary Inspection, the Incomplete/Deficient work identified is greater in substance and/or volume, than can be appropriately declared as Punch-list, then the Work is not complete enough to complete the Preliminary Final Inspection. The Contractor will be so notified in writing. Contractor must complete the Work and re-initiate procedures for another Preliminary Final Inspection. Any costs to District for more than two (2) Preliminary Inspections may be charged to the Contractor.

C. If the results of the Preliminary Final Inspection are satisfactory to the District's Representative, a Punch-list will be prepared and issued to the Contractor. Pursuant to Section 01450, Quality Control and Inspections, neither the District's preparation of the Punch List, nor any omission from the Punch-list of items of Incomplete and/or Deficient Work, relieves the Contractor from completing all the Work required by the Contract Documents.

15.05 FINAL INSPECTION FOR INTERMEDIATE MILESTONE(S)

A. When the Punch-list generated from the Preliminary Final Inspection is complete the QC Manager must certify that the entire Work of the Milestone, including Punch-list, is complete. Upon delivery of such certification to the District's Representative, and if the District's Representative agrees with the Contractor's certification, a Final Inspection will occur within ten (10) calendar days of the Contractor's delivery of certification of final completion

B. If District's Representative determines the Work is deficient, Contractor will again be furnished with a Punch-list identifying the observed deficiencies in the Work. After all deficiencies have been corrected, Contractor must initiate procedures for another Final Inspection. If more than two (2) Final Inspections are required any costs to District for additional Final Inspections may be changed to the Contractor.

C. If the results of the Final Inspection are satisfactory, the District's Authorized Representative will issue the Contractor a Milestone Completion letter.

D. Contractor's Progress Schedule must include activities for Final Inspection of Milestones.

15.06 COMPLETION OF FINAL PROJECT MILESTONE

A. Pursuant to Section 01450, Quality Control and Inspections, the Contractor's Quality Control Manager must certify that the completion of the final Milestone for the Work is complete. Completion of the Work of the Final Milestone includes, but is not limited to, submission to and acceptance by the District of all Milestone completion submittals. Section 01770, Closeout Procedures, describes in greater detail the submittal requirements to

achieve Milestone Completion. Additionally, all training (except previously-scheduled factory training) must be completed.

B. Conducting the Preliminary Final Inspection, and Final Inspection, of the Work required of the final Project Milestone, follows the requirements of paragraphs 15.04 and 15.05 above.

C. The Contractor's QC Manager's certification also includes the completion of all Punch-list work and the correction of all rework.

D. The Contractor must submit all documents required by Section 01770, Closeout Procedures.

E. After acceptance of the Contractor's QC Manager's final certification, the District's Authorized Representative will issue a Milestone Completion letter to the Contractor. This letter will establish the date of the Final Milestone Completion of the Work of the Project. The assessment of Liquidated Damages, if any, will cease accruing as of the date of Final Milestone Completion.

15.07 RECOMMENDATION FOR ACCEPTANCE BY THE DISRICT ENGINEER

A. After establishing Final Milestone Completion of the Work, the District's Authorized Representative will recommend that the District Engineer formally accept the Work if the Contractor has satisfactorily:

1. Corrected all deficiencies observed during the Final Inspection and no new deficiencies have been observed;
2. Submitted required copies of As-Built Documents;
3. Submitted required Spare Parts;
4. Submitted copies of all documents required by Section 01770, Closeout Procedures; and
5. Submitted all other required contract deliverables.

B. The Project Manager must submit the following Project Completion certification prior to District Engineer Acceptance of the Project:

> *"I certify that, to the best of my knowledge, all Work of the Project is Complete, including the fulfillment of all administrative requirements of the Contract. I request the District accept the Project as complete."*
>
> _____
>
> *Project Manager of the Contractor*

15.08 ACCEPTANCE OF THE WORK

A. Acceptance of the Work will be made by the District Engineer, only after the District's Authorized Representative has recommended Acceptance.

B. After the formal Acceptance of the Work, the District will record a Notice of Completion.

C. District's Acceptance establishes conformity with the Contract except for delays in completion, latent defects, fraud, or such gross errors as amount to fraud, willful misconduct, or gross negligence, and subject to any Guarantee and Warranty, express or implied.

D. Determinations by District's Authorized Representative that the Work is complete or Acceptance of the Work by the District Engineer, does not bar any action by the District against the Contractor pursuant to Section 00700-15.12, Warranties & Guarantees.

15.09 FINAL PAYMENT

A. Provided that District has recorded a Notice of Completion, thirty-five (35) Days after the date of recording of the Notice of Completion by the County Recorder, the District will process the request for Final Payment for the Work. District will withhold from Final Payment such amounts that are in Dispute between District and

Contractor, amounts subject to offset/setoff, and all other amounts that must be withheld by law (such as Stop Notice sums).

B. All estimates and payments made, including the final estimate and payment, are subject to correction and adjustment for clerical errors in the calculations involved in the determination of quantities and payments. Contractor and District agree to pay to the other any sum hereby due.

15.10 CONTRACTOR'S DUTIES AND RESPONSIBILITIES AFTER ACCEPTANCE

A. After Acceptance of the Work Contractor is relieved of the duty of maintaining and protecting the entire Work, and Contractor is not required to perform any further Work thereon, except as otherwise required by law or the Contract Documents.

B. Contractor is relieved of responsibility for injury to persons or property or damage to the Work that occurs after District's Acceptance, provided that such injury/damage is not in any way caused by Contractor.

C. District's Acceptance does not relieve Contractor of responsibility for faulty materials or workmanship or of complying with the requirements of Warranties and Guarantees.

15.11 RETENTION PROCEEDS, WITHHOLDING AND DISBURSEMENT

A. Pursuant to California Public Contract Code §7107, within sixty (60) Days after the date of "completion" of the Work, the retention withheld by District shall be released, subject to all withholds required and authorized by law including Stop Notice claims and Liquidated Damages (pursuant to California Government Code §53069.85). In the event of a Dispute between District and Contractor, District may withhold from the Final Payment an amount not to exceed one hundred fifty percent (150%) of the disputed amount.

B. For purposes of release of retention, "completion" means any of the following:

1. The Acceptance by District of the Work.
2. After the commencement of Work, a cessation of labor on the Work for a continuous period of one-hundred (100) Days or more, due to factors beyond Contractor's control.
3. After the commencement of Work, a cessation of labor on the Work for a continuous period of thirty (30) Days or more, if District records a Notice Of Cessation or a Notice Of Completion with the County Recorder.

C. Subject to Section 00700-15.11.D below, within seven (7) Days from the time that all or any portion of the retention proceeds are received by Contractor, Contractor must pay each of its Subcontractors from whom retention has been withheld, each Subcontractor's share of the retention received. However, if a retention payment received by Contractor is specifically designated for a particular Subcontractor, payment of the retention shall be made to the designated Subcontractor, if the payment is consistent with the terms of the Subcontract. (California Public Contract Code §7107(d))

D. Contractor may withhold from a Subcontractor its portion of the retention proceeds if a bona fide dispute exists between the Subcontractor and Contractor. The amount withheld from the retention payment shall not exceed one hundred fifty percent (150%) of the estimated value of the disputed amount.

E. In the event that retention payments are not made within the time periods required by California Public Contract Code (PCC) §7107, the District or Contractor withholding the unpaid amounts shall be subject to a charge of two percent (2%) percent per month on the improperly withheld amount, in lieu of any interest otherwise due. Additionally, in any action for the collection of funds wrongfully withheld, the prevailing party shall be entitled to attorney's fees and costs. (PCC §7107)

15.12 WARRANTY & GUARANTEES

A. Neither the final Acceptance, nor payment, nor any provision in the Contract Documents relieves Contractor of responsibility for faulty materials or workmanship.

B. Contractor must guarantee all workmanship and materials for a period of one year, or as specified in the technical sections of the Contract Documents (specifications), from and after the Date of Acceptance of the Work by the District's Director of Public Works.

C. Contractor may also be required to furnish a written Guarantee covering all or certain items of Work for longer periods of time from the Date of Acceptance of the Contract. The Work to be Guaranteed, the form, and the

time limit of the Guarantee will be specified in the Contract Documents. Said Guarantee must be signed and submitted to District before Acceptance of the Work.

D. The Warranty/Guarantee period begins at the Date of Acceptance of the Work by the District Engineer.

E. In addition to any other warranties in this contract, the Contractor warrants, except as provided in paragraph J of this clause, that work performed under this contract conforms to the contract requirements and is free of any defect in equipment, material, or design furnished, or workmanship performed by the Contractor or any subcontractor or supplier at any tier.

F. This Warranty shall continue for a period of one year from the date of final acceptance of the work by the District Engineer. If, pursuant to Section 00700-15.01 above, District takes possession of any part of the work before final acceptance, this Warranty shall continue for a period of 1 year from the date the District takes possession the specific Work identified pursuant to 15.01.

G. The Contractor shall remedy at the Contractor's expense any failure to conform, or any defect. In addition, the Contractor shall remedy at the Contractor's expense any damage to District-owned or controlled real or personal property, when that damage is the result of—

1. The Contractor's failure to conform to contract requirements; or
2. Any defect of equipment, material, workmanship, or design furnished.

H. The Contractor shall restore any work damaged in fulfilling the terms and conditions of this clause. The Contractor's Warranty with respect to work repaired or replaced will run for 1 year from the date of repair or replacement.

I. With respect to all warranties, express or implied, from subcontractors, manufacturers, or suppliers for work performed and materials furnished under this contract, the Contractor shall—

1. Obtain all warranties that would be given in normal commercial practice;
2. Require all warranties to be executed, in writing, for the benefit of the District, if directed by the District's Authorized Representative; and
3. Enforce all warranties for the benefit of the District, if directed by the District's Authorized Representative.

J. Unless a defect is caused by the negligence of the Contractor or subcontractor or supplier at any tier, the Contractor shall not be liable for the repair of any defects of material or design furnished by the District nor for the repair of any damage that results from any defect in District-furnished material or design.

K. This Warranty shall not limit the District's rights under the Milestone Completion and District Engineer acceptance paragraphs of this Contract with respect to latent defects, gross mistakes, or fraud.

L. Contractor must repair or replace all defective Work, together with any other Work affected by the repair or replacement during said Guarantee period without expense whatsoever to District.

M. The aforesaid one-year Warranty/Guarantee period does not in any way limit or waive District's rights to legal recourse for latent construction defects, pursuant to California Civil Code of Procedure §337.15 nor for patent construction defects pursuant to §337.1.

N. Approximately ninety (90) Days before completion of the entire Work of the Project, Contractor must meet with District regarding Warranty/Guarantee requirements. District will establish communication procedures for notifying Contractor of Warranty defects, priorities regarding the type of defect, time required for Contractor response, and other details deemed necessary by District for execution of the Warranty/Guarantee.

O. If the Contractor fails to remedy any failure, defect, or damage, within five (5) calendar days of District's notice, or commence to remedy and proceed with due diligence when the repair cannot be completed within five (5) days, the District may replace, repair or otherwise remedy the failure, defect or damage at the Contractor's expense.

****END ARTICLE 15****

**ARTICLE 16 - MISCELLANEOUS PROVISIONS**

16.01 CONTRACTOR'S USE OF COMPUTER SOFTWARE

A. Contractor certifies that it has appropriate systems and controls in place to ensure that District funds will not be used in the performance of this Contract for the acquisition, operation or maintenance of computer software in violation of copyright laws.

16.02 RIGHTS IN LAND AND IMPROVEMENTS

A. Nothing in the Contract shall be construed as allowing Contractor to make any arrangements with any person to permit occupancy or use of any land, structure, or building within the physical limits of the Project for any purpose whatsoever, either with or without compensation, nor act in conflict with any agreement between District and any owner, former owner, or tenant of such land, structure, or building.

B. Contractor must not occupy District's property outside the Project limits as shown on the Plans or on maps available in District's offices, unless Contractor enters into a written agreement with District.

****END ARTICLE 16****

****END OF SECTION 00700****

**Project:** (NAME OF PROJECT)

**Change Order No. 0X**
**Date:**

**Owner:** Sausalito-Marin City Sanitary District
**Contractor:** (CONTRACTOR)

**Phone:** (415) 332-0244
**Phone:** (XXX) XXX-XXXX

The following change is hereby made to the contract:

**Description of Change:**

This negotiated change order, in the amount of $0.00, is for… (Describe change/s)

**Pricing Data:** A negotiated settlement in the total amount of **$0.00**.

**Requested by:** Mutually agreed upon by Contractor and Owner.

**Contract Time:** This change order does not constitute an extension of the contracted time. (Revise Contract time as agreed to by Owner.)

The owner and the contractor hereby agree that this change order constitutes full and mutual accord and satisfaction for all time, all costs, and all impacts related to this revision. In accepting this change order, the contractor agrees that it represents a full and equitable adjustment to the contract, and further agrees to waive all rights to file claim with respect to any difficulties arising from, or as a result of, this change.

| | |
|---|---|
| Original Contract: | $0.00 |
| Previous Additions: | $0.00 |
| Previous Deductions: | $0.00 |
| This Change Order: | $0.00 |
| Contract to Date: | $0.00 |

Approved by:

_____
Construction Manager – NAME, COMPANY

_____
Owner – Kevin Rahman, SMCSD

_____
Contractor – NAME, COMPANY

**SECTION 00800**

**SUPPLEMENTARY GENERAL CONDITIONS**

## 1.1 Damages for Delays Allowed for Completion

In accordance with the provisions of Section 00700-6.2, Contract Time, the following substantial completion and final completion contract times shall be completed within the number of consecutive calendar days from the date established in the Notice to Proceed for the commencement of Contract Time:

| Contractual Completion Event | Completion Time (# of calendar days from Notice to Proceed date) |
|---|---|
| **Substantial Completion** | **280 DAYS** |
| **Final Completion** | **300 DAYS** |

## 1.2 Damages for Delays

In accordance with the provisions of Section 00700-6.5, **Liquidated Damages**, for the period of time that any portion of the Work remains unfinished after the time fixed for an interim milestone and/or Substantial Completion in Section 00800-1.1, **Time Allowed for Completion**, as modified by extensions of time granted by the Owner, it is understood and agreed by the Contractor and the Owner that the Contractor shall pay the Owner the damages listed below.

| Contractual Completion Event | Daily Liquidated Damages |
|---|---|
| **Substantial Completion** | **$1,500** |
| **Final Completion** | **$1,000** |

In accordance with the provisions of Section 00700-6.4.2.C, **Weather Delays**, an allowance of **ten (10)** working days of weather caused delay have been included in the time allowed for completion. This allowance represents a reasonable assessment of anticipated lost working days based on historical weather patterns. These weather days shall be included in the Contractor's schedule as specified in Section 700, **WEATHER CONDITIONS AND WEATHER DAY ALLOWANCE.**

## 2.0 OTHER DAMAGES

### 2.1 Public Hardship or Negative Impact

#### A. Traffic Control

Traffic control lasting beyond the prescribed times (applied on a per-site, per day basis, see Section 01550).

| | |
|---|---|
| First 15-minute interval | Warning |
| Second 15-minute interval | $ 500 |
| Each additional 15-minute interval or fraction thereof | $1,000 |

#### B. Work Hours

Maintaining or running equipment outside the permitted hours (see Section 01140 and Appendix C).

| | |
|---|---|
| First occurrence | Warning |
| Second occurrence | $ 500 |
| Third and subsequent occurrences | $1,000 |

#### C. Site Cleanliness

Failure to maintain the cleanliness of the construction site (see Section 00700-10).

| | |
|---|---|
| First Occurrence | Warning |
| Second Occurrence | $ 500 |
| Third and subsequent Occurrences | $1,000 |

#### D. Vegetation/Survey Monuments

Failure to protect vegetation or survey monuments (see Section 01722, Field Engineering).

| | |
|---|---|
| First Occurrence | Warning |
| Second Occurrence | $ 500 |
| Third and Subsequent Occurrences | $1,000 |

#### E. Maintenance of Temporary Pavement:

Failure to maintain temporary paving as required by the affected pavement owner.

| | |
|---|---|
| First Occurrence | Warning |
| Second Occurrence | $ 500 |
| Third and Subsequent Occurrences | $1,000 |

### F. Right-of-Way Restrictions:

Failure to comply with right-of-way restrictions.

| | |
|---|---|
| First Occurrence | Warning |
| Second Occurrence | $ 500 |
| Third and Subsequent Occurrences | $1,000 |

### G. Tree Protection:

Failure to comply with all tree and root protection requirements (see Section 01560-1.07).

| | |
|---|---|
| First Occurrence | Warning |
| Second Occurrence | $ 1,000 |
| Third and Subsequent Occurrences | $ 2,000 |

**END OF SECTION**

# SECTION 01060

# REGULATORY REQUIREMENTS AND PERMITS

## PART 1 GENERAL

### 1.01 SUMMARY

A. The Contractor shall comply with all the terms, conditions and requirements attached to all permits, bonds and licenses required by any local, state, or federal agencies to perform work, construct, erect, test and start-up of any equipment or facility for this Contract. The Contractor shall give all notices necessary and incidental to the due and lawful prosecution of the Work.

B. Any permits, bonds, licenses and fees therefore required for the performance of work under this Contract and not specifically mentioned herein as being obtained and paid for by the District shall be included in the Contractor's Bid price. The Contractor shall apply for and obtain all safety permits for excavations, tunneling, trenches, construction (building structure, scaffolding, or falsework) and demolition required by CAL/OSHA.

C. The Contractor shall obtain and pay for all construction permits and licenses necessary for the performance of the Contract that have not been provided by the District, and shall give all public notices necessary for the lawful performance of the Contract. All permits, licenses, and other authorizations shall be obtained in sufficient time to prevent delays to the work; and a copy of each permit, license, or other authorization shall be submitted to the Construction Manager.

D. Where permits and/or licenses require subsequent contingent permits, inspections, or other actions, the Contractor shall comply with these requirements at no additional cost to the District, except that the inspection fees charged by regulatory or permitting agencies shall be paid by the District. However, if the inspection fee is due to noncompliance with the permit requirements, such inspection fee shall be paid by the Contractor.

E. The Contractor shall post at the site of Work all required permits as stipulated by the respective regulatory agency.

### 1.02 LOCAL AGENCY AND BUILDING CODE FEES AND PERMITS

A. If applicable to any portions of the Work, the District has applied for and obtained, in its name, the necessary building, plumbing and electrical permits for this project. The Contractor shall be responsible for satisfying all code requirements, calling for inspections, and obtaining final approvals on behalf of the District. The Contractor shall notify the Construction Manager of the need and the readiness of all required inspections. All inspections are to be coordinated with the Construction Manager. The Contractor shall comply with all construction conditions stipulated in the permits. The Contractor shall be responsible for and the District shall not provide reimbursement for any costs required for the reinspection of defective work or additional costs due to the Contractor’s failure to properly schedule the inspections.

The Contractor shall comply with the provisions of any and all permits obtained by the District.

B. The District is not responsible for any local agency or utility permits required for temporary facilities during construction such as field office trailers and temporary electrical service for construction operations. Obtaining all such permits and the costs associated with such permits are the responsibility of the Contractor and shall be included in the Contractor's Bid Price.

## 1.03 UTILITY FEES AND PERMITS

A. The District will pay for electrical, telephone, gas and other utility-company design, engineering, connection, and relocations fees imposed by various companies for the work. Payment of fees by the District shall not relieve the Contractor of the responsibility to obtain and coordinate permits and comply with all utility company requirements. All permits, licenses, and other authorizations shall be secured in sufficient time to prevent delays to the work.

## 1.04 EASEMENTS FOR CONSTRUCTION

A. The District may provide easements for work under the Contract. District-provided easements are shown in the Contract Documents. All work within private and public properties shall be accomplished in conformance with any specific conditions, instructions, and/or requirements of the respective easements.

B. The District may provide additional easements for use of public or private property for working space, haul roads, and for storage of materials and equipment. District-provided easements are shown in the Contract Documents. The Contractor may use such property so provided for working space, haul roads, and for storage of materials and equipment. Should the Contractor find it necessary or advantageous to use any land, over and above that land that is provided, for any purpose whatever, the Contractor shall, at its expense, obtain a written agreement with the property owner and obtain approval from the District for the use of such land. A copy of any such agreement shall be submitted to the Engineer prior to implementation.

C. Nothing in the Contract shall be construed as allowing the Contractor to make any arrangements with any person to permit occupancy or use of any land, structure, or building for any Contract purpose whatsoever, either with or without compensation, in conflict with any agreement between the District and any owner, former owner, or tenant of such land, structure, or building.

# PART 2 ENCROACHMENT PERMITS

A. All work within public properties and rights of way shall be accomplished in conformance with any specific conditions, instructions, and/or requirements contained in permits issued by the agencies having jurisdiction over such property and rights of way. The Contractor is responsible for obtaining the completed permit for construction.

## 2.02 ENVIRONMENTAL REQUIREMENTS

A. See Section 01560.

## 2.03 PERMITS TO BE OBTAINED BY CONTRACTOR

A. State of California Department of Industrial Relations Occupational Safety and Health Administration (Cal/OSHA) – Construction Activities Permit. The Contractor shall obtain a Construction Activity Permit from Cal/OSHA for excavations and pipeline trenches greater than five (5) feet deep into which construction personnel will enter. To obtain the permit, the Contractor shall schedule and attend a safety permit conference with the nearest Cal/OSHA District office. At the conference, the Contractor shall provide enough project details that Cal/OSHA can make a determination that the work will be performed safely.

## 2.04 PERMIT-REQUIRED INSPECTION COSTS

A. Contractor shall pay the cost of inspection by Permit Issuer for work that is required by permit conditions to be performed on weekends or outside normal working hours. See individual permits for inspection requirements.

# PART 3 PART 2 - PRODUCTS (NOT USED)

# PART 4 PART 3 - EXECUTION (NOT USED)

# PART 5 PART 4 - ADDITIONAL REQUIREMENTS (NOT USED)

**END OF SECTION**

# SECTION 01110

# SUMMARY OF WORK

## PART 1 GENERAL

### 1.01 SUMMARY

A. Section includes: Identification and summary description of the Work associated with the project, project location, Owner furnished products, activities by others, coordination, and early occupancy by Owner.

### 1.02 THE WORK

A. The Work consists of construction of the **Screw Press Relocation project** including the following:
   1. Disassembly and inspection of existing screw press dewatering system.
   2. Replacement of select mechanical components on the screw press system including screw press motor and covers, flocculation tank agitator and motor, and headbox level transducer.
   3. Reassembly and recommissioning of screw press dewatering system at new location on the Equalization Structure.
   4. Installation of new digested sludge feed pump, digested sludge piping and appurtenances.
   5. Demolition of existing digested sludge feed pump, polymer feed system and associated piping.
   6. Installation of new polymer feed system at Equalization Structure and relocation of existing polymer tote.
   7. Installation of screw press dewatering system platform and repairs to existing screw press platform.
   8. Installation of 1W/3W piping to screw press and polymer feed systems.
   9. Electrical, instrumentation, and controls improvements, including screw press panel modifications, existing PLC modifications, new conduits and pull boxes, and lighting modifications.
   10. Dewatering of sludge during press relocation, or off-haul of liquid sludge.
   11. Additional work as needed to construct a complete and operational project as specified in these Contract Documents.

B. Except as specifically noted otherwise, provide and pay for:
   1. Insurance and bonds.
   2. Labor, materials, and equipment.
   3. Tools, equipment, and machinery required for construction.
   4. Utilities required for construction.
   5. Temporary facilities including sheeting and shoring.
   6. Storm water pollution control prevention measures.
   7. Dust control measures.
   8. Traffic control.
   9. Other facilities and services necessary for proper execution and completion of the Work.

C. Secure and pay for all permits including OSHA excavation permits, Department of Transportation permits, government fees, and licenses.

D. Comply with codes, ordinances, regulations, orders, and other legal requirements of public authorities having bearing on the performance of the Work.

## 1.03 LOCATION OF WORK

The Work will be performed at the following locations as shown on the Contract Drawings:

A. Treatment Plant: Immediately South of the City of Sausalito at 1 East Rd., a Sausalito address.

## 1.04 OWNER FURNISHED EQUIPMENT

No equipment is to be provided by Owner other than existing equipment identified to be rehabilitated, such as the existing screw press.

## 1.05 ACTIVITIES BY OTHERS

A. Activities by others which may affect performance of work include:
   1. Normal daily operation and maintenance of the existing wastewater pumping stations by the Owner.
   2. Work by other contractors on CIP projects currently in construction. Coordination of work may be required due to limited space for access and staging.

## 1.06 COORDINATION OF WORK

A. Contractor shall photograph or video all work and staging locations prior to construction including all concrete and asphalt pavement, curb and gutter, fencing to remain, structures to be demolished, and existing structures and facilities that are to be modified, etc:
   1. Provide all photos and/or video to Owner on a portable storage device prior to beginning construction activities.
   2. The video shall clearly identify existing site and structural conditions prior to construction.

# PART 2 PRODUCTS

Not Used.

# PART 3 EXECUTION

NOT USED.

END OF SECTION

# SECTION 01140

# WORK RESTRICTIONS

## PART 1 GENERAL

### 1.01 SUMMARY

A. Section Includes: Requirements for sequencing and scheduling the Work affected by existing site and facility operations, work restrictions, and coordination between construction operations and Owner operations.

### 1.02 GENERAL CONSTRAINTS ON SEQUENCE AND SCHEDULING OF WORK

A. The Contractor shall be responsible for disposal of sludge at all times the existing screw press is not available. Disposal requires off-haul and disposal of liquid sludge to another agency at no additional cost to the Owner. Contractor will be responsible for installing a temporary pumping and piping system to transfer liquid sludge to trucks for off-haul. Off-haul trucks may be staged on the equalization basin but may not access the plant's causeway. Trailered tanks may not enter the treatment plant and must receive delivery on East Road.

Alternately, the Contractor may dewater sludge using temporary facilities. Dewatered sludge may be off-hauled by the District if existing sludge bins are used. Note that dewatering sludge will require space which must be confirmed as available and appropriate by the District in advance. <u>The use of staging for dewatering must be approved by the District prior to bid and is not guaranteed to be available.</u>

B. The District has other CIP projects scheduled for construction concurrently with this project. Coordination will be required due to space constraints and to ensure that the operating treatment plant is not adversely impacted.

C. Conduct Work in a manner that will not impair the operational capabilities of essential elements of the existing pump stations or reduce the capacity of the system below levels sufficient to transfer and treat the raw wastewater to the water quality limitations specified in the Owner's National Pollutant Discharge Elimination System (NPDES) permit.

D. Include costs in the bid price for compliance with the limitations and constraints pertaining to maintaining the operational capacity of the pump stations and downstream treatment facility.

### 1.03 INTERRUPTION OF OPERATIONS

A. Execute the Work while the existing facilities are in operation and without interrupting current operations to the extent possible.

B. Indicate required shutdowns of existing facilities or interruptions of existing operations on Progress Schedule. Prior approval from the Owner will be required for each shutdown. Shutdowns will be permitted to the extent that existing operation of the pump stations and treatment plant will not be jeopardized and the identified constraints are satisfied.

C. The Owner will evaluate each request based on the system's ability to reliably meet capacity demands.

D. Do not begin alterations until Owner's written permission has been received.

E. Unless indicated otherwise, provide 14 days written notice and a 24-hour final written notice to the Owner and Engineer for review and acceptance prior to:
   1. Beginning demolition of any facility, utility or equipment.
   2. Beginning a piping tie-in to an existing facility or pipe.
   3. Draining a tank or structure prior to beginning work adjacent to or inside that tank or structure.
   4. Interrupting the power source to an operating facility.
   5. Conducting any other work that will interrupt normal system operations.

F. The 14 days written notice shall be accompanied with a completed System Outage Request (SOR) to be filled out by the Contractor. System Outage Requests shall include sketches and written description of the affected areas or processes, bypass and plugging plans, flow and volume calculations, schedule of downtime and service restoration, and other pertinent information for systems or process affected by the shutdown.

G. The 24-hour final written notice shall identify any major deviations, if any, to the System Outage Request. Major deviations that cannot be reasonably accommodated by Owner may result in denial of the System Outage Request, and any costs associated with delays that occur as a result of this denial shall be borne solely by the Contractor.

H. The Contractor shall control the release of any sewage volumes temporarily stored in piping or tanks during a shutdown to prevent a rush of flow to the wet well, in the collection system, or to the treatment plant. The Contractor shall be responsible for any damage caused by the uncontrolled discharge of high flows. The Contractor shall be held responsible for overburdening the sewer collection system or treatment process that causes the discharge of sewage into the environment.

I. The Contractor shall reimburse the Owner for any fines levied by regulatory agencies due to spills, backups, or overflows resulting from the Contractor's failure to comply with the requirements herein.

J. Minimize shutdown times by thorough advanced planning. Have required equipment, materials, and labor on hand, ready for work, at time of shutdown.

K. All OSHA required lock-out/tag-out safety procedures shall be observed and followed.

## 1.04 COMPLIANCE WITH NATIONAL POLLUTANT DISCHARGE ELIMINATION SYSTEM PERMIT AND OTHER REGULATORY PERMITS

A. The existing wastewater collection system and treatment plant are operating under the terms of a NPDES permit issued by the California Regional Water Quality Control Board San Francisco Bay Region. This permit specifies the water quality limits that the treatment plant must meet prior to discharge of effluent. A copy of the existing permit is on file for review at the treatment plant.

B. Perform work in a manner that will not prevent the existing system from achieving the discharge water quality requirements established by regulations.

C. Bear the cost of penalties imposed or scheduled on the Owner by any regulatory agency for discharge violations caused by actions of the Contractor.

D. Bypassing of untreated or partially treated sewage to surface waters or drainage courses is prohibited during construction. When such accidental bypassing occurs as a result of actions of the Contractor, the Owner is entitled to take appropriate action and costs incurred will be deducted from progress payments.

## 1.05 REQUIREMENTS FOR MAINTAINING CONTINUOUS OPERATION OF EXISTING FACILITIES

A. Facilities or conditions required to keep the existing pump stations operational include, but are not limited to, the following:
   1. Electrical power including transformers, distribution wiring and motor control centers.
   2. Piping for conveyance of wastewater and other utilities to and from the facilities.
   3. Lighting.
   4. Instrumentation, meters, controls and telemetry equipment.
   5. Safety equipment and features.
   6. Storm drainage.

B. Conduct the Work and provide temporary facilities required to keep the existing pump stations continuously operational.

C. Do not remove or demolish existing facilities required to keep the existing pump stations operational at the capacities specified until the existing facilities are replaced by temporary, new, or upgraded facilities or equipment.
   1. Replacement facilities shall have been tested and demonstrated to be operational prior to removing or demolishing existing facilities.

## 1.06 OPERATIONS AND MAINTENANCE ACCESS

A. Provide and maintain safe, continuous access to control equipment and deliveries for Owner's operations and maintenance staff and other personnel contracted by the Owner to perform work at the site.

## 1.07 SHUTDOWN CONSTRAINTS

A. Comply with shutdown constraints described herein.

B. A shutdown is defined herein as that period of time during which a normal collection system, pump station, or treatment plant function and activity cannot take place or are interrupted.

## 1.08 UTILITIES

A. Maintain electrical, telephone, gas, sanitary facilities, and other utilities within existing facilities in service. Provide temporary utilities when necessary.

# PART 2 PRODUCTS

NOT USED.

## PART 3 EXECUTION

### 3.01 COORDINATION OF WORK

A. Maintain overall coordination of execution of work.

B. Obtain construction schedules from subcontractors and suppliers and assume responsibility for correctness.

C. Incorporate schedules from subcontractors and suppliers into Progress Schedule to plan for and comply with sequencing constraints.

D. Where proper execution of the Work depends upon work by others, inspect and promptly report discrepancies and defects.

### 3.02 GENERAL REQUIREMENTS FOR EXECUTION OF WORK

A. Locate temporary facilities in a manner that minimizes interference to Owner's operation and maintenance personnel.

B. Unless otherwise specified, install temporary pipelines of the same size as its connection to the existing facility at the downstream end of the pipeline.

C. Provide piping of suitable material for the material being conveyed.

D. Provide submittals on proposed temporary pumping facilities, temporary plugs, and temporary electrical and instrumentation components necessary to maintain existing facilities.

E. Dimensions and locations for all existing structures, aboveground and underground piping and utilities, paving, and other nonstructural items are approximate. The Contractor shall field verify all dimensions and conditions and report any discrepancies to the Engineer a minimum of 14 days in advance of any construction in the area and prior to fabrication of materials.

F. Discrepancies between coordinates, bearings and lengths, and stationing shall be resolved in the following order of precedence:
   1. Coordinates.
   2. Bearings and lengths.
   3. Stationing.

### 3.03 WORK SEQUENCE AND CONSTRAINTS

A. General:
   1. The Suggested Work Sequence and Constraints presented herein do not necessarily include all items affecting the completion of the Work, but are intended to describe in general the critical events necessary to minimize disruptions of the existing facilities. Utilize the description of critical events in the Suggested Work Sequence and Constraints in this Section as a guideline for scheduling and completing the Work.
   2. Additional Constraints may be imposed during the Work depending on Contractor’s sequence of work.
   3. Any element not listed herein but requiring a shutdown shall be coordinated with the Owner in advance. The time and duration will require an evaluation by the Owner. All

costs to implement a shutdown, including all requirements of the District to ensure system reliability, shall be implemented by the Contractor at no additional cost to the Owner.

4. Unless noted otherwise or as determined by the Engineer, the term “Substantially Complete” referenced in this Section for any item shall be defined as when all structural, mechanical, HVAC, electrical, instrumentation, and other incidental Work necessary to render that item of Work complete and ready for operation by the Owner at the Owner’s discretion.
5. Operations and maintenance manuals must be submitted and approved in advance of Owner accepting or taking over operations of any equipment or facilities requiring such manuals.
6. Operator training must be completed in advance of Owner accepting or taking over operations of any equipment or facility where training is required.

B. Removing Facilities from Service:
   1. The Owner will be responsible for taking existing equipment out of service. Contractor shall coordinate shutdown and restart activities with the Owner’s operations staff.
   2. The Contractor shall be responsible for draining structures and piping, removing accumulated materials and debris, and cleaning drained facilities prior to commencing work:
      a. Owner will be responsible for the operation of all existing equipment including valves, gates, pumps, and other equipment that impacts system operation.
      b. While reasonable efforts will be made by Owner to positively shut-off valves, gates, and other isolation devices, Contractor shall plan for and provide means in his work to drain and dispose of the pipe contents, and remove any liquid leakage, dripping, and spills from the shut-off device or the isolated pipe in a manner without impacting his work.
      c. Contents removed from structures and pipes shall be disposed by the Contractor.
   3. The following structures may require isolation depending on the Contractor’s sequence of work. Some of these structures have existing valves. Where temporary isolation of any of these structures is required per the Contract Documents or as determined by the Contractor to complete the Work, Contractor shall provide the required temporary equipment such as plugs, stop plates, or other isolation devices necessary for isolation of these structures. Coordinate installation of all isolation devices with their respective work sequence activities and with Owner’s operations staff to minimize negative impacts on system operation:
      a. Storm drain lines impacted by construction.
      b. Sludge piping.
      c. Utility Water.
      d. Condensate drains.
      e. Power and control systems.

C. Construction Access:
   1. Access to Project Site:
      a. Minimize vehicles entering the project site during construction. The treatment plant area has limited space and must remain accessible for operations at all times. Parking is available along East Road.
      b. Coordinate deliveries and movement of equipment within the treatment plant area in advance.
      c. No trailer trucks may enter the treatment plant area.
   2. Project Limits:

a. Do not conduct work outside the project limits indicated on the Drawings without prior approval from the Owner, the National Park Service (GGNRA) and/or the City of Sausalito, as applicable.

D. Key Project Element Possible Work Sequence and Constraints:

1. Complete pre-construction inspections and surveys.
2. <u>Provide work sequence for review and approval.</u>
   a. Possible Work Sequence:
      1) Construct the main platform and stairs at the Equalization Structure.
      2) Install polymer feed system and relocate polymer tote/containment pallet and associated 3W, 1W, drain and odor pipe / pipe supports at the Equalization Structure.
      3) Install the 3” digested sludge pipe and appurtenances from the digested sludge pump lower level to the Equalization Structure.
      4) Coordinate with Synagro and District to haul the sludge offsite while the screw press is shutdown.
      5) Coordinate with District to shut down and drain the 3” digested sludge feed line and screw press with the following steps:
      a) Turn off the digested sludge feed pump to stop flow to the digested sludge pipe and screw press.
      b) Close valves upstream and downstream of pipe segment to be replaced.
      c) Drain isolated digested sludge pipe using taps on the existing pipe.
      6) Perform modifications on the screw press control panel. Install pull boxes and conduits.
      7) Provide temporary piping from existing digested sludge pump to off-hauling system.
      8) Demolish existing 3” digested sludge pipe above grade, screw press drain pipes, odor pipe, and utility water pipe as indicated on Drawing D10, D11 and D20.
      9) Demolish the existing polymer feed system and associated piping.
      10) Coordinate with the District and FKC to disassemble the existing screw press.
      11) Coordinate with the District and FKC to inspect the existing screw press and provide maintenance.
      12) Relocate the screw press to the new platform on the Equalization Structure and anchor per FKC requirements.
      13) Relocate the screw press control panel to the Equalization Structure.
      14) Install backup control panel
      15) Complete all new cables and conduits from existing location to the new location
      16) Install new digested sludge feed pump and control panel. Connect new 4” digested sludge feed pipe to existing 4” digested sludge feed pump, and install piping to new pump.
      17) Tie-in new 3” digested sludge feed pipe to new digested sludge feed pump.
      18) Connect 3” digested sludge, 1W/3W, odor and drain pipes to the screw press.
      19) Connect the polymer pipe to the 3” digested sludge pipe.
      20) Connect power and signals to all equipment including fiberoptic network.
      21) Close outlet valve from secondary digester (under digester). Run existing digested sludge feed pump to drain 4” digested sludge lines.
      22) Open 4” digested sludge existing valve below grade to new sludge pump and run pump.
      23) Recommission the screw press system and controls.

24) Shutdown existing digested sludge feed pump and disassemble temporary piping. Return pump to owner.
25) Demolish existing 4” digested sludge pipe to existing sludge pump.
26) Perform repairs on existing screw press platform at lower level.

3. Connection and Shutdown Constraints
   a. Contractor is responsible to maintain removal of liquid sludge or to provide dewatered sludge for the District to off-haul at all times that the existing screw press is not available. This time shall be minimized in the project schedule.
   b. The existing digested sludge piping may be removed from service for no more than one continuous 8 hour period to allow the Contractor to install the temporary piping to the off-hauling system.
   c. The 1W and 3W system may be removed from service for no more than one continuous 4 hour period to allow the Contractor to make the connection to the system. All work listed below shall be completed within this time frame unless noted otherwise.
   d. Dewatering screw press system may be removed from service for no more than 2 months. Provide sludge off-hauling for this duration.
   e. All temporary pumps shall be electrically driven to reduce noise and emissions.

E. Electrical Constraints:
   1. General:
      a. All electrical outages must be scheduled with the Owner a minimum of fourteen (14) calendar days in advance.

END OF SECTION

# SECTION 01160

# SITE SAFETY REQUIREMENTS

## PART 1 GENERAL

### 1.01 SUMMARY

A. Section Includes: Safety requirements applicable to the Work.

B. Related Sections:
   1. Section 00700 – General Conditions.
   2. Section 01330 – Submittal Procedures.

### 1.02 CONSTRUCTION SAFETY

A. Contractor's Responsibility:
   1. The Contractor shall be solely and completely responsible for conditions of the job site, including safety of all persons, including employees and property, during performance of the work. This requirement shall apply continuously and not be limited to normal working hours. Safety provisions shall conform to U.S. Department of Labor, the California Occupational Safety and Health Act (OSHA), and all other applicable Federal, State and local laws, ordinances, codes, the requirements set forth below, and any regulations that may be detailed in other parts of these documents. Where any of these are in conflict, the more stringent requirement shall be followed. The Contractor's failure to thoroughly familiarize himself with the aforementioned safety provisions shall not relieve him from compliance with the obligations and penalties set forth herein:
      a. The Contractor shall develop and maintain, for the duration of this Contract, a safety program that will effectively incorporate and implement all required safety provisions. The Contractor shall appoint an employee who is qualified and authorized to supervise and enforce compliance with the safety program.
      b. The duty of the Construction Manager or the District to conduct construction review of the Contractor's performance is not intended to include a review or approval of the adequacy of the Contractor's safety supervisor, the safety program, or any safety measures taken in, on, or near the construction site.
      c. The Contractor, as part of this safety program, shall maintain at his office or other well-known place at the job site, safety equipment applicable to the work as prescribed by the aforementioned authorities, all articles necessary for giving first aid to the injured, and shall demonstrate an understanding of the facility procedures established for emergency care of persons who may be injured on the job site.
      d. If a claim is made by anyone against the Contractor or any subcontractor on account of any accident, the Contractor shall promptly report the facts in writing to the Construction Manager, giving full details of the claim. Such notice shall be in addition to any other notice requirements which may apply to such claims.

B. District Safety Requirements:
   1. The Contractor shall read the District Safety Requirements and train/instruct its employees and its Subcontractor's employees on all District Safety Requirements that pertain to the Work. The responsibility to review and train Contractor staff on District safety requirements is the responsibility of the Contractor.

C. Safety Violation, Incident, Injury or Accident Emergency at the Work Site:
   1. In the event of an accident or incident during construction, Contractor shall immediately notify the Construction Manager and the District's Authorized Representative immediately. Within 24 hours of the occurrence of a safety violation or incident, the Contractor shall submit to the Construction Manager an investigation report describing the incident in detail.
   2. Contractor shall call 911 for accident involving bodily injury, fire hazard, damage to gas piping, flooding and similar occurrences, requiring an immediate emergency response. Contractor shall also comply with all CAL-OSHA notification requirements.
   3. If there is a safety violation from the Contractor's employees or subcontractor's employees, the Engineer will first issue a safety warning to the violating Contractor's employees or subcontractor's employees. After the first warning and upon a second violation, the Contractor shall remove the employee who caused the safety violation from the job site. This applies to both the Contractor and subcontractor's employees.
   4. The Contractor shall immediately correct any safety violation(s).

D. Facility Operation:
   1. Contractor personnel shall not operate, by any means, existing facility. Contractor shall submit advanced notice to Construction Manager for any required facility change in operation including equipment lockout and tagging for system shutdown for each individual activity. Facility staff will execute the shutdown after the request has been approved. Advance notice shall be in accordance with the Contract Documents.

E. Training & Certificates:
   1. Contractor personnel shall have sufficient training and certificates in performing work such as confined space entry, asbestos material removal, welding, diving, heavy equipment operation, and others. Up-to-date certificates for all personnel performing such work shall be provided to the Construction Manager before the start of the work.

F. Equipment Operation:
   1. All cranes and hoists, forklifts, confined space rescue equipment, gas monitors, diving gear, and welding tools or other equipment shall be certified or verified (tested or calibrated) for their operability and rated capacity. Contractor shall present those certificates to the Construction Manager before the start of the work.

G. Confined Space Entry of Existing Facilities:
   1. No confined-space entry of existing facilities is allowed unless specifically approved by the Construction Manager. If Contractor is planning a confined-space entry on facility grounds, submit a copy of the company's confined-space program to the Construction Manager. Contractor shall follow California

Code of Regulations (CCR), Title 8, Sections 5156, 5157 and 5158 governing confined space entry. Contractor is responsible for supplying own certified rescuer and rescuing equipment at no cost to the District. Contractor must notify the Construction Manager of the time and date prior to confined space entry. Contractor is responsible for providing all associated equipment including harnesses, sniffers, rescue tripod, etc. No District safety equipment may be used by the Contractor.

H. Hot Work Responsibilities:
   1. Fire resulting from hot work could significantly affect facility operations. Hot work includes brazing, cutting, grinding, soldering, torch-applied roofing, and welding. No hot work is permitted without authorization from the Construction Manager. A signed hot work permit must be issued by the responsible facility party. Specific firefighting equipment and protection gear will be required at the hot work site before any work can be started.

I. Hazardous Materials Regulations:
   1. The Contractor shall have a site health and safety supervisor fully trained pursuant to hazardous materials regulations be present during excavation, trenching, or cut and fill operations to monitor for evidence of potential soil contamination, including soil staining, noxious odors, debris or buried storage containers. The site health and safety supervisor must be capable of evaluating whether hazardous materials encountered constitute an incidental release of a hazardous substance or an emergency spill. The site health and safety supervisor shall direct procedures to be followed in the event that an unanticipated hazardous materials release with the potential to impact health and safety is encountered. These procedures shall be in accordance with hazardous waste operations and regulations and specifically include, but are not limited to, the following: immediately stopping work in the vicinity of the unknown hazardous materials release and securing the area; notifying the Construction Manager, and retaining a qualified environmental firm to perform sampling, remediation, and/or disposal.

J. Modifications to Existing Utilities:
   1. When modifications, additions, connections, and abandonment are made to existing public utilities, the Contractor shall contact the affected agency for notifications and/or required procedures.

K. Underground Service Alert:
   1. Contractor shall provide advance notice to and utilize services of Underground Service Alert for location and marking of underground utilities operated by utility agencies.

L. Material Safety Data Sheet (MSDS):
   1. Attention is directed to the provisions of General Industry Safety Orders, Section 5194, Title 8, California Administrative Code. The Contractor shall submit to the Engineer a Material Safety Data Sheet for each hazardous substance proposed to be used, ten days prior to the delivery of such material to the job site or use of such material at a manufacturing plant where the Engineer is to perform an inspection. Hazardous substance is defined as any substance included in the list (Director's List) of hazardous substances prepared by the Director, California Department of Industrial Relations, pursuant to Labor Code Section 6382.

M. Fire Prevention and Protection
   1. 1. The Contractor shall perform all Work in a fire-safe manner. The Contractor shall supply and maintain on the site adequate fire-fighting equipment capable or extinguishing incipient fires. The Contractor shall comply with applicable federal, local, and state fire-prevention regulations. Where these regulations do not apply, applicable parts of the National Fire Prevention Standard for Safeguarding Building Construction Operations (NFPA No. 241) shall be followed.
   2. Sufficient number of fire extinguishers of the type and capacity required to protect the Work and ancillary facilities shall be provided in readily accessible locations.

N. Use of Explosives
   1. Use of explosives is not allowed on this Site.

O. Demolition Activities:
   1. During demolition activities, the Contractor shall:
      a. Provide temporary minimum six feet tall chain link fencing around each work area and signage to prohibit access by unauthorized personnel and vehicles. Fencing design and signage subject to Construction Manager review.
      b. Provide interior and exterior shoring, bracing, or supports to prevent movement, settlement, or collapse of structures to be partially or completely demolished, and to adjacent structures or other facilities to remain.
      c. Protect and maintain conduits, drains, sewers, pipes, and wires that are to remain on the property.

## 1.03 SUBMITTALS

A. The following information shall be provided in accordance with Section 01330 - Submittal Procedures, after the Award of Contract:
   1. Health and Safety Plan (SSCSP):
      a. The Contractor or Contractor's representative shall prepare a Site-Specific Contractor Safety Program (SSCSP) pursuant to Section 00700 - Article 12, Protection of Persons and Property. At the minimum, the SSCSP shall address the following:
         1) Incorporate District Safety Requirements applicable to the work at their respective properties.

2) Contractor's plan to protect workers (such as providing personnel training, personal protective equipment, and respiratory protective devices) while working in the presence of contaminated or hazardous materials.
3) Establishment of exclusionary site work zones and security measures.
4) Implementing and conducting dust control measures, ambient air monitoring for health and safety purposes, and administering contingency plans, if necessary.
5) Emergency response protections including compliance with CAL/OSHA notification requirements.
6) The SSCSP shall be prepared, signed, and submitted for Construction Manager review. The Contractor shall not initiate work activities at the project site until the Construction Manager has provided written clearance to proceed.
7) The SSCSP shall be reviewed and signed by the Contractor and all personnel, including subcontractors, who will be engaged in or overseeing Work in the construction zones. No worker shall be allowed in these areas until he/she has signed and acknowledged receiving and understanding a copy of the SSCSP.
8) The Contractor shall be responsible to make sure that all personnel performing work in the identified, potentially contaminated area(s) must have read and clearly understands the SSCSP.
9) The SSCSP shall be conformed to the requirements of all local, state, and federal ordinances, rules, regulations, and guidelines concerning occupational health and safety issues, including OSHA regulation 29 Code of Federal Regulations (CFR) 1910.120.

2. Mandatory Safety Program: Injury and Illness Prevention Program (IIPP) or Safety Work Plan.
3. Safety Data Sheets (SDS's): Any hazardous material brought onto the facility site by Contractor or subcontractors.
4. Hot Work Program: For welding, torching, cutting, brazing, etc., around combustible or hazardous materials.
5. Confined Space Program: For confined space entry.
6. Fall Prevention Program: For working on ladders, at heights or using fall protection equipment.
7. Training Certificate or License: Asbestos removal, welding, diving, and heavy equipment operation (for cranes, forklifts, etc.), confined-space entry and rescue, etc.
8. Calculations: Seismic design for equipment support, shoring for deep soil excavation, adequacy check of existing floor and structures for support of moving loads, etc.

## PART 2 **PRODUCTS**

Not Used.

## PART 3 **EXECUTION**

Not Used.

END OF SECTION

# SECTION 01200

# MEASUREMENT AND PAYMENT

## PART 1 GENERAL

### 1.01 SUMMARY

A. This Section includes the administrative and procedural requirements for Contractor payments as herein specified and further described in General Provisions.

B. Related Sections:
   1. Section 00400 - Bid Form.
   2. Section 00510 - Agreement
   3. Section 01324 - Progress Schedules and Reports.
   4. Section 01330 - Submittal Procedures.
   5. Section 01780 - Record Documents.

### 1.02 SUBMITTALS

A. The following information shall be provided in accordance with Section 01330 - Submittal Procedures, for review and approval:
   1. Schedule of Values: Submit using the Contractor's standard form.
   2. Application for Payment: Submit using Contractor's Transmittal Summary form.
   3. Final Application for Payment.

### 1.03 DESCRIPTION OF BID ITEMS

A. BID ITEM NO. 1: MOBILIZATION AND DEMOBILIZATION INCLUDING SWPPP (LUMP SUM):

   1. The lump sum bid for mobilization and demobilization shall not exceed six percent (6%) of the Total Bid Price. Mobilization and demobilization, complete as specified, shall include survey to establish preconstruction conditions, cost of obtaining all insurance, bonds, and necessary permits not obtained by the District, cost for complying with all of the conditions set by all required permits, SWPPP costs, move in of equipment, tools, supplies, materials, and manpower to the job site; provision of temporary field office and utilities and sanitary facilities; move out and cleanup of the job site after the project is completed and accepted by the District:
      a. Demobilization shall include site cleaning and restoration of surfaces within the job site, post-construction meeting, removal of all temporary facilities and equipment from the work area, disconnection of the temporary construction utilities and turnover of Project to the District.
      b. In the event the Contractor writes in a Mobilization/Demobilization price greater than six percent (6%) on the Bid Schedule found in Section 00400 - Bid Form, the District will pay any excess with the final Progress Payment.
      c. Contractor may apply for payment of mobilization on a percent complete basis as the items covered in the Mobilization are being completed:

d. Demobilization shall constitute no less than 40% of the lump sum price for bid item no. 1.

B. BID ITEM NO. 2: DEMOLITION (LUMP SUM):

1. The lump sum amount for performing all work in accordance with the Contract Documents, including but not limited to demolition of the existing polymer feed system and shade structure; digested sludge feed pump, screw press piping (e.g., feed, drain, odor, discharge chute); utility water piping; electrical and instrumentation items (e.g., control panels, conduits, VFDs, antennae/radio, light pole, CPU) and all associated appurtenances and supports.

C. BID ITEM NO. 3: SCREW PRESS RELOCATION (LUMP SUM):

1. The lump sum amount for performing all work in accordance with the Contract Documents, including but not limited to relocation of the existing screw press and polymer tote; inspection and rehabilitation of the existing screw press; recommissioning the existing screw press; electrical, instrumentation and controls associated with the equipment (e.g., screw press panel modifications, existing PLC modifications, new conduits and pull boxes, and lighting modifications); piping (e.g., 1W, 3W, odor, drain); and all associated appurtenances and supports.

D. BID ITEM NO. 4: SCREW PRESS PLATFORM (LUMP SUM):

1. The lump sum amount for performing all work in accordance with the Contract Documents, including but not limited to the screw press platform, stairs, handrails, and repair of existing screw press platform.

E. BID ITEM NO. 5: POLYMER FEED SYSTEM (LUMP SUM):

1. The lump sum amount for performing all work in accordance with the Contract Documents, including but not limited to installation of the new polymer feed system; electrical, instrumentation and controls associated with the equipment; piping; and all associated appurtenances and supports.

F. BID ITEM NO. 6: DIGESTED FEED SLUDGE PUMP AND PIPING (LUMP SUM):

1. The lump sum amount for performing all work in accordance with the Contract Documents, including but not limited to the new digested feed sludge pump; digested sludge piping; and all associated appurtenances and supports.

G. BID ITEM NO. 7: LIQUID SLUDGE DISPOSAL DURING CONSTRUCTION (LUMP SUM):

1. The lump sum amount for performing all work in accordance with the Contract Documents, including but not limited to hauling and disposing of liquid sludge offsite using a temporary piping system and off-hauler (e.g. Synagro), and all associated appurtenances and supports.

   Alternate to hauling liquid sludge, Contractor may dewater sludge for off-haul using existing sludge bins. However, limited space is available for dewatering equipment and for off-haul truck access. Dewatering on-site may not impact normal operations or access. The use of staging

for dewatering must be approved by the District prior to bid and is not guaranteed to be available.

H. BID ITEM NO. 8: COMPLETE ALL OTHER WORK AS REQUIRED TO COMPLETE THE PROJECT WITH THE EXCEPTION OF BID ITEMS 1 THROUGH 7 (LUMP SUM):

1. The lump sum amount for performing all other work in accordance with the Contract Documents, with the exception of work included under Bid Items 1 through 7.

## 1.04 SCHEDULE OF VALUES

A. Provide a detailed breakdown and prepare a separate Schedule of Values for each schedule of the Work under the Agreement at least 20 days prior to the first Application for Payment Date allocating the Contract Price to various trades, types of work, pieces of equipment, and major tasks to assist the Engineer in evaluating the percentage completion for each part of the Work:
   1. A Schedule of Estimated Progress Payments shall be provided with initially acceptable Schedule of Values.
   2. Submit adjustments thereto with Applications for Payment.

B. The Contractor's overhead and profit shall be uniformly pro-rated over all items in the Schedule of Values. The Schedule of Values shall represent the actual cost of each segment of the work and shall not allocate higher costs, overhead or profit to work items scheduled for early completion. If the Engineer objects to the allocation of cost or the level of detail provided, the Contractor shall revise and resubmit the Schedule of Values.

C. Upon request of Construction Manager, provide documentation to support the accuracy of the Schedule of Values.

D. Unit Price Work: Payment shall be based on actual quantities used and the unit price entered in the conformed Proposal Form.

E. Work Breakdown:
   1. Reflect specified contingency allowances and alternates, as applicable.
   2. Divide the Work into the following major items (sub-networks) of Work:
      a. Mobilization.
      b. Demobilization.
      c. As-Built Drawings.
      d. Startup and Testing.
      e. Hazardous Material Procedures.
      f. Earthwork:
         1) General Earthwork and Grading.
         2) Shoring, Bracing, and Sheet Pile.
         3) Dewatering.
         4) Final Site Grading.
      g. Demolition/Salvage/Relocation.
      h. Yard Piping and Structures.
      i. All related and applicable Structural, Mechanical, HVAC, Plumbing, finishes, furnishings, and Electrical, Instrumentation and control work shall be included in the sub-networks listed above.

j. Any specific proposal items shall be clearly identified within the schedule with a value matching the proposal. A separate line item may be required.
k. Miscellaneous work items and other prices not included in previous items and necessary to complete the Work.
l. Assign prices to major items of Work which aggregate the Total Contract Price. Base prices on costs associated with scheduled activities based on the Project Schedule for each major item of Work.

F. An unbalanced or front-end loaded schedule will not be acceptable.

G. Contractor shall include the costs necessary to complete the Work throughout the entire contract duration.

H. Summation of the complete Schedule of Values representing all the Work shall equal the Total Contact Price.

I. Submittal of the Schedule of Values is a condition precedent to the issuance of any payment under the Contract.

J. Items in the Schedule of Values are to accurately reflect the cost of work.

K. Acceptance by the Construction Manager shall only indicate consent to the cash flow as a basis for preparation of partial payment estimates and shall not constitute an agreement as to the value of each indicated item.

## 1.05 APPLICATION FOR PAYMENT

A. Transmittal Summary Form: Attach one Summary Form with each detailed Application for Payment for each schedule and include Request for Payment of Materials and Equipment installed as applicable. Execute certification by authorized officer of Contractor.

B. Use Contractor's detailed Application for Payment Summary Form as approved by the Construction Manager. Submit application using District’s Web Based Construction Management System or as directed by the Construction Manager.

C. Provide separate form for each schedule as applicable.

D. Include accepted Schedule of Values for each schedule or portion of lump sum Work and the unit price breakdown for the Work to be paid on a unit priced basis.

E. Include separate line item for each Change Order and Work Change Directive executed prior to date of submission. Provide further breakdown of such as requested by the Construction Manager. Identify change order by number and description.

F. The District shall not release Payment until the Contractor provides all supporting documentation, as specified herein. Supporting documentation shall include, but is not limited to, updated project schedule (Section 01324 - Progress Schedules and Reports), lien release, and acceptable progress on the Project Record Documents (Section 01780 - As-Built Documents).

G. Deviation from the above requirements or incomplete submission shall require resubmission of the application for payment.

## 1.06 MEASUREMENT – GENERAL

A. Where measurement of quantities depends on elevation of existing ground, elevations obtained during construction will be compared with those shown on Drawings. Variations of one (1) foot or less will be ignored, and profiles shown on Drawings will be used for determining quantities.

B. Unit of measure shown on Bid Form shall be as follows, unless specified otherwise:

| Item | Method of Measurement |
|---|---|
| AC | Acre—Field Measure by Engineer |
| CY | Cubic Yard—Field Measure by Engineer within limits specified or shown |
| CY-VM | Cubic Yard—Measured in Vehicle by Volume |
| EA | Each—Field Count by Engineer |
| GAL | Gallon—Field Measure by Engineer |
| HR | Hour |
| LB | Pound(s)—Weight Measure by Scale |
| LF | Linear Foot—Field Measure by Engineer |
| SF | Square Foot |
| SY | Square Yard |
| TON | Ton—Weight Measure by Scale (2,000 pounds) |

## 1.07 PAYMENT

A. The date for Contractor's submission of monthly Application for Payment shall be established at the Preconstruction Meeting.

B. Payment for all the Work shown or specified in Contract Documents is included in the Total Contract Price. Payment will be made for Work completed during the payment period based on cost incurred for each line item of the accepted Schedule of Values per the Agreement Documents.

C. Payment for Unit Price items covers all the Work necessary to furnish and install the items identified in the schedule in the Proposal Form. Payment will be made for the actual quantity of Work completed during the payment period per the Agreement Documents.

## 1.08 NONPAYMENT FOR REJECTED OR UNUSED PRODUCTS

A. Payment will not be made for the following:
   1. Loading, hauling, and disposing of rejected material.
   2. Quantities of material wasted or disposed of in manner not called for under Contract Documents.
   3. Rejected loads of material, including material rejected after it has been placed by reason of failure of Contractor to conform to provisions of Contract Documents.
   4. Material not unloaded from transporting vehicle.

5. Defective Work not accepted by the District.
6. Material remaining on hand after completion of Work.

## PART 2 PRODUCTS

Not Used.

## PART 3 EXECUTION

Not Used.

## PART 4 ADDITIONAL REQUIREMENTS

Not Used.

END OF SECTION

# SECTION 01312

# PROJECT MEETINGS

## PART 1 GENERAL

### 1.01 SECTION INCLUDES

A. Requirements for calling for and conducting meetings for the Work.

### 1.02 REFERENCED SECTIONS

A. The following Section is referenced in this Section:
   1. Section 01324 – Progress Schedules and Reports.

### 1.03 GENERAL

A. Project meetings and conferences are an important administration and communication requirement of all project participants. Meetings will be conducted throughout the course of the construction to address issues related to the Work, review and coordinate progress of the Work, and to discuss other matters of common interest to project participants.

B. Meeting and conference locations and qualified participants will be determined by the Construction Manager, Engineer and the Contractor based on the meeting agenda topics.

C. The Construction Manager may change in-person meetings to virtual on-line meetings. The virtual meeting platform used by the Construction Manager will accommodate video, audio and screen sharing by using providers such as Zoom. When the Construction Manager hosts such virtual meetings, it is required that all attendees turn on video camera for better interaction among meeting participants.

### 1.04 PRECONSTRUCTION CONFERENCE

A. Prior to the start of construction, the Construction Manager will schedule a meeting of the Contractor, Engineer, Owner, and their respective representatives. The general purpose of the meeting will be to establish working relationships, begin coordination of construction matters, discuss the Work, and to review the pertinent features of the Contract. The duration of the preconstruction conference may take up to 4 hours.

B. The agenda for the meeting will cover at least the following items, a more detailed agenda will be distributed at the meeting:
   1. Organization of the Contractor's forces and personnel, including subcontractors and materials suppliers.
   2. Lines of authority and channels and procedures for communication.
   3. Contractor’s construction schedule, including sequence of critical work.
   4. Processing of shop drawings and other data that will be submitted to Owner for review.
   5. Processing of change order requests and monthly applications for payment.

6. Procedures for quality control, housekeeping and related matters.

C. Contractor should be prepared to discuss the following topics:
   1. Preliminary construction schedule and critical path.
   2. Schedule of submittals and submittals needing short turn-around times.
   3. Schedule of Values for construction payments.
   4. Critical work sequencing.
   5. Plans for mobilization, arrangement and use of staging and storage areas, use of site, location and arrangement of field offices, and site security.

D. Minutes of Meeting:
   1. The Construction Manager will compile minutes of the meeting and distribute copies to all participants.

## 1.05 PROGRESS MEETINGS

A. Unless otherwise arranged, there will be a weekly progress meeting at a time and at an on-site location that is mutually agreed upon between the Contractor, Construction Manager, Engineer, and Owner:
   1. Meetings are to enable orderly project review during the progress of work.
   2. Construction Manager, Engineer, Owner, Contractor's Superintendent, representatives of subcontractors, suppliers' representatives as may be needed, other Contractors working at the site, and other parties shall attend these meetings.
   3. Construction Manager will preside over the meeting and will compile and distribute minutes of the meeting.

B. The purpose of the weekly meetings is to coordinate the efforts of all concerned to result in smooth and coordinated progress towards completion of the overall project.

C. Contractor shall bring to each weekly meeting the updated 2-week "look ahead" schedule.

D. The Contractor will be required to address the following items at the weekly meeting:
   1. Work completed last week.
   2. Work anticipated next week.
   3. Log of submittals and Requests for Information.
   4. Contract document deficiencies or questions noted during prior week.
   5. Schedule status and corrective measures and procedures that are planned to place the project back on schedule, if such action is necessary.
   6. Report of any accidents, and any site safety issues that need to be addressed.

E. Other agenda items to be discussed include:
   1. Review and revise as necessary and approve minutes of previous meetings.
   2. Status of Requests for Information, Change Order Requests, submittals and shop drawings.
   3. Identify problems that impede planned progress.
   4. Other current business pertaining to the Work.

F. Revision of Minutes:
   1. Unless published minutes are challenged in writing prior to the next regularly scheduled progress meeting, they will be accepted as properly stating the activities and decisions of the meeting.
   2. Persons challenging published minutes shall reproduce and distribute copies of the challenge to all indicated recipients of the particular set of minutes.
   3. Challenge to minutes shall be settled as priority item of "old business" at the next regularly scheduled meeting.

## 1.06 PROGRESS SCHEDULE AND PROGRESS BILLING MEETINGS

A. Once each month, a progress schedule and progress payment meeting will be conducted with the Construction Manager. The purpose of this meeting is to review the Progress Payment Estimate and reach agreement on the extent of the Work completed during the pay period.

B. The meeting date will be scheduled in accordance with the Owner's deadline for submittal of Progress Pay Estimate.

C. The updated progress schedule will also be reviewed at this meeting as described in Section 01324, Progress Schedules and Reports. Schedule impacts, time extension requests, actual and anticipated schedule activity sequence/duration changes, delays, and other schedule-related topics will be discussed.

D. The Construction Manager may require more frequent progress schedule meetings should there be schedule revisions that necessitate such a meeting.

## 1.07 SUBMITTAL MEETINGS

A. When required in the individual technical specification, or if requested by the Contractor, Construction Manager, or the Engineer, a meeting regarding a required submittal will be held to facilitate the timeliness of the submittal preparation and review process.

## 1.08 QUALITY ASSURANCE MEETINGS

A. The Contractor or the Engineer may request a meeting prior to the start of a particular phase of the project to discuss how the Work shall be accomplished in accordance with the quality requirements of the Contract Documents, Codes, permits and industry standards. Quality assurance inspections and tests that are applicable to the Work will be discussed.

## 1.09 PRE-INSTALLATION MEETINGS

A. When required in the individual specification, or if requested by the Contractor or Engineer, a pre-installation meeting will be held to review conditions of the installation, installation procedures, and coordination with related work. This meeting will be scheduled to take place in advance of installation of the equipment or as required in the technical specifications.

## 1.10 PRE-SUBSTANTIAL COMPLETION MEETING

A. Thirty (30) days prior to the estimated substantial completion, the Owner, Construction Manager, Engineer, Contractor, and appropriate subcontractors will meet to review maintenance manuals, guarantees, closeout submittals, bonds, and service contracts for materials and equipment.

## 1.11 SPECIAL MEETINGS

A. Any time during progress of the Work, the Owner and the Construction Manager shall have the authority to require the Contractor and any subcontractor, suppliers, or service providers to attend job-site conferences on matters which require immediate or special attention. Any notice of such conference shall be duly observed and complied with by the Contractor and subcontractors, suppliers, or service providers without extra cost to Owner.

## 1.12 POST CONSTRUCTION GUARANTY PERIOD MEETING

A. Contractor shall meet with a representative of the Owner and the Engineer approximately eleven (11) months after the date of Substantial Completion to inspect the Work. Meeting will be arranged by the Owner at least seven (7) days before meeting. The Contractor will require attendance of its Project Manager/Superintendent, appropriate manufactures and appropriate subcontractors.

# PART 2 PRODUCTS (NOT USED)

# PART 3 EXECUTION (NOT USED)

**END OF SECTION**

# SECTION 01322

# CONSTRUCTON DOCUMENT MANAGEMENT

## PART 1 WEB DATABASE

### 1.01 SUMMARY

A. **USE E-MAIL** The project team will use e-mail as the primary means of communication related to the Project's correspondence, submittals, requests for information (RFIs), advisory notices, non-compliance issues, etc. where hard copies or samples are not required.

### 1.02 NOTIFICATIONS AND AUDIT LOG TRACKING

A. Review comments made (or lack thereof) by the Construction Manager and Engineer on Contractor submitted documentation shall not relieve the Contractor from compliance with requirements of the Contract Documents. The Contractor is responsible for managing, tracking, and documenting the Work to comply with the requirements of the Contract Documents. The Construction Manager's acceptance via automated system notifications or audit logs extends only to the face value of the submitted documentation and does not constitute validation of the Contractor's submitted information.

### 1.03 CONTRACTOR RESPONSIBILITY

A. The Contractor shall be responsible for the validity of their information submitted and for the abilities of their personnel. Adobe PDF documents will be created through electronic conversion rather than optically scanned whenever possible.

B. Provide a list of Contractor's key personnel for the Construction Manager's acceptance.

## PART 2 EQUIPMENT

### 2.01 SUMMARY

A. In order to process correspondence, submittals, and RFIs, the Contractor must provide and have in place for its own use the required basic components outlined below.

### 2.02 HARDWARE

A. A computer with internet access and sufficient capabilities to perform all project duties; a scanner at least large enough to scan 11" x 17" sheets with sufficient resolution to maintain clarity and legibility of the document at its native size; and a color printer of sufficient size and capacity to accept incoming correspondence as described in this Section.

## 2.03 SOFTWARE

A. Adobe Acrobat 9 or higher; Microsoft's Internet Explorer v7 or higher; Microsoft Office 2003 or higher, including but not limited to Microsoft Word and Microsoft Excel.

## 2.04 FACILITIES

A. The Contractor shall make its own arrangements to provide high-speed (minimum speed: download 256Mbps / upload 10Mbps) internet connection for its own use as soon as practicable.

# PART 3 EXECUTION

## 3.01 SUMMARY

A. All project related correspondence (RFIs, submittals, etc.) originated by the Contractor or Subcontractor, Supplier, et al. shall be directed to the Construction Manager, unless otherwise indicated in the Specifications.

## 3.02 SUBMITTALS

A. The use of the electronic communication does not waive the requirement for the provision of hard copies of all formal correspondence and submittals. The hard copies of all documents must match the electronic copies of all correspondence and submittals.

B. Submittals shall be in accordance with Section 01330, Submittal Procedures. The provisions of Section 01330 shall apply both to electronic copies and hard copies of submittals.

C. In addition to above, submittal preparation and information management shall include by but not limited to Sections:
   1. Section 01324 – Progress Schedules and Reports.
   2. Section 01330 – Submittal Procedures.
   3. Section 01340 – Request for Interpretation.
   4. Section 01782 – Operation and Maintenance Data
   5. Section 01780 – Record Documents.

## 3.03 ADOBE PDF

A. All information, comments, questions, and statements shall be scanned and/or converted to the PDF file format and attached to the email. Items to be sent via email include but are not limited to large-format plan sheets (22" x 34" or larger), small-format plan sheets, pages within tabbed binders, RFIs, transmittal sheets, et al. The PDF attachments supplied to the Construction Manager shall be in a sufficient resolution to be fully legible at its native size.

B. All separate files within a given piece of correspondence shall be combined into a single PDF document (i.e. An RFI that contains a text file and two photo files shall be combined into a single PDF document prior to delivery to the Construction Manager.)

## 3.04 LABELING FORMAT

A. The subject line of each email, and the file name of any attached files shall begin with the file labeling scheme:
   1. RFI_XX.Y_(Contractor Name)_(Subject).
   2. Letter_XX_(Contractor Name)_(Subject).
   3. Transmittal_XX_(Contractor Name)_(Subject).
   4. PCO_XX.Y_(Contractor Name)_(Subject).
   5. Submittal_XX.Y_ZZZZZ_(Contractor Name)_(Subject).

B. The first section of the label indicates the type of correspondence (i.e RFI). “XX” indicates a unique number, sequentially assigned for the given piece of correspondence. “Y” is a sequential number assigned for revised or resubmitted documents. Initial correspondence shall be designated as Rev 0. “ZZZZZ” indicates the associated specification number. “(Contractor Name)” Contractor's name may be abbreviated if it is lengthy but must remain consistent. The Contractor will indicate the subject at the end of the numbering scheme. Each piece of correspondence shall be sent in a separate email. O&M submittal numbering shall be as specified in Section 01782, Operation and Maintenance Data

## 3.05 SUBMITTALS

A. If a submittal package has multiple items that are not directly related, each item shall be considered a separate submittal and shall be sent separately. For example, “Concrete Mix Design,” and “Concrete Curing Compound” shall be submitted as separate items to the Construction Manager.

B. All submittals shall be complete. Piece-meal submittals will be rejected. When submitting a revised document all changes shall be highlighted by the Contractor. Submittals returned with Make Corrections Noted (MCN) do not require a re-submittal, however, review comments shall become part of the final approved submittal.

## 3.06 ORIGINAL DOCUMENTS

A. Where possible, the Contractor will obtain the electronic document from its original source to maintain the integrity, legibility, and searchability of the document.

## 3.07 ORGANIZATION

A. The information included in the attachments shall be organized in a logical and thoughtful manner. Where the information originated in a tabbed format (a binder, for example), the scanned and/or converted PDF file shall be electronically bookmarked accordingly using the “bookmark” function of Adobe Acrobat 9 Std.

## 3.08 PRINTING

A. Except where otherwise indicated, the Contractor will receive no hard copies of the above outlined correspondence. The Contractor will be required to print for its use, in color if necessary, any record copies, field copies, subcontractor copies, etc., if such copies are desired.

## 3.09 PROJECT FORMS

A. The Contractor may use its own correspondence forms to be attached to correspondence emails as long as the Contractor's forms comply with this and all submittal sections.

**END OF SECTION**

# SECTION 01324

# PROGRESS SCHEDULES AND REPORTS

## PART 1 GENERAL

### 1.01 SECTION INCLUDES

A. Progress Scheduling and reporting requirements.

### 1.02 REFERENCED SECTIONS

A. The following Sections are referenced in this Section:
   1. Section 00700 - General Conditions.
   2. Section 00800 – Supplementary General Conditions.
   3. Section 00510 – Agreement.

### 1.03 SUMMARY

A. The Progress Schedule for this Project will also be referred to as the Critical Path Method (CPM) Schedule. A CPM network schedule is a graphical depiction of the Contractor's construction plan, showing the sequential activities necessary to complete the Work within the specified contract times and constraints. The CPM network schedule for this project shall depict events and tasks as activities, showing their interrelationships, and shall identify the progress required for each activity before subsequent activities can start. Activities shall be logically presented in a network showing the activities' interrelationships chronologically. Because each activity has an assigned duration, the completed network shall show the critical path of activities that must be completed on time to ensure timely project completion. The earliest and latest start and finish times for each activity shall also be shown. The CPM network shall be comprehensive and shall include all interdependencies and interactions required to perform the Work.

B. The construction schedules and accompanying reports outlined in this section are important to the District as they budget, plan and administer the project. The District, Construction Manager and/or Engineer will regularly analyze the most current progress schedule during construction to monitor progress status of the project relative to contract times. The Schedule Updates and Weekly Schedules will be an agenda item at all project coordination meetings as project participants work together in prioritizing their respective tasks and action items to efficiently perform their duties.

C. The Time Impact Analyses are very important submittals to the Construction Manager and District as they evaluate activity durations and the relationships between activities before deciding on possible changes to the contract time and/or viable options to mitigate time impacts.

D. By submitting a bid for this Project, the Contractor represents to the District that Contractor will have included all costs within its Total Bid Price to fully comply with all scheduling and reporting requirements hereinafter prescribed in this Section.

## 1.04 RESPONSIBLE SCHEDULING PERSON

A. The Contractor shall designate, in writing within five (5) calendar days after Notice of Award the person responsible for preparation, maintenance, updating and revision of all schedules required in this Section.

B. The qualifications of this Responsible Scheduling Person shall include:
   1. Capable of understanding this project scheduling specification and producing a schedule and reports to the standards defined in this specification.
   2. Five (5) years verifiable experience in preparation of complex construction schedules for projects of similar value, size and complexity.
   3. Must be very proficient in the use of CPM scheduling utilizing Oracle Primavera Professional Project Manager (P6) PPM scheduling software.

C. The Contractor shall provide references of three (3) project Owners or Construction Managers who have personal experience with this scheduler on previous projects. References shall include current contact information (telephone and/or email) for Construction Manager to verify the qualifications of the proposed responsible scheduling person.

D. Contractor's Responsible Scheduling Person shall be available on-site as needed and have authority to act on behalf of the Contractor. All scheduling software and hardware shall be located on-site. Scheduler shall attend project meetings as called for by the Construction Manager for proper explanation of all schedule updates.

E. In the event the Contractor does not have an employee with the required scheduling qualifications, as determined by the Construction Manager, the Contractor will be required to employ a qualified CPM scheduling consultant who regularly performs these services and who in the opinion of the Construction Manager possesses the required scheduling qualifications and availability to perform the CPM scheduling for this Project.

F. Construction Manager reserves the right to remove scheduler from the project if found to be incompetent.

## 1.05 SCHEDULING FORMAT AND SOFTWARE

A. Schedule Format: Utilize critical path method (CPM) format utilizing Precedence Diagramming Method.

B. Prepare computerized schedules utilizing Oracle Primavera Professional Project Manager (P6) PPM scheduling software compatible with Windows 8 or later version.

C. The Contractor shall provide one licensed copy of the Oracle Primavera Professional Project Manager (P6) PPM scheduling software program used to produce the Contractor's Schedule to the Construction Manager, registered in the Construction Manager's name. This licensed copy must be provided no later than five (5) days after the Notice to Proceed date.

## 1.06 PRECONSTRUCTION SCHEDULING MEETING AND PREPARATION

A. The Construction Manager will conduct a Preconstruction Scheduling Meeting with Contractor's Project Manager and Responsible Scheduling Person within seven days (7) calendar days after approval of the Contractor's designated Scheduler. This meeting is separate from the Preconstruction Conference Meeting and is intended to only cover schedule requirements for this project. These requirements would include formatting, color coding, activity detail, coding structure, calendar requirements, reporting requirements, updates, revisions, and schedule delay analysis.

B. Contractor shall present their schedule methodology, planned sequence of operations and proposed activity coding structure. The coding structure shall, at a minimum, include code fields for Project Segment or Phase, Area of Work, Type of Work, Submittal/Procurement/Construction and Responsibilities (this would include all subcontractors). The activity code structure shall be sufficient to allow future sorting and/or grouping by responsibility or subcontractor, area/location, CSI division, milestones and change orders. This will allow the "rollup" of the activities in the form of a Summary Schedule.

C. During preparation of the Preliminary and Baseline Schedules, the Construction Manager will facilitate Contractor's efforts by being available to answer questions regarding sequencing issues, scheduling constraints, interface points, and dependency relationships.

## 1.07 PRELIMINARY PROGRESS SCHEDULE

A. Within five (5) days after receipt of Notice to Proceed or Preconstruction Conference, whichever occurs first, the Contractor shall submit a Preliminary Progress Schedule in the form of time scaled logic diagram and a bar chart which shows the Contractor's intention to execute the Work within the specified contract times and constraints. The Preliminary Progress Schedule shall cover the following project phases and activities:
   1. Procurement and Submittals, including shop drawings and fabrication and delivery of key and long lead time procurement items. The Contractor's submittal information shall show intended submittal dates and shall include, as a minimum, the maximum allowable review period as specified as a separate predecessor activity:
      a. The information shall provide sufficient durations for administration, fabrication and transportation to produce realistic delivery dates for the procurement items.
   2. All activities planned for the first ninety (90) days in the execution of the Work.
   3. The approach to scheduling the remaining activities or phases of the Work shall be represented by at least one summary activity for each major phase or activity. The total duration of the summary activities shall equal the Contract Time.
   4. Approximate duration for each summary activity representing the Contractor's best estimate for the work the summary activity represents.
   5. Weather days as specified in General Conditions 8.03.C.1.b, Weather Delays

B. The Contractor shall produce and provide four (4) complete sets of each of time scaled logic diagram and bar charts in color on 22-inch by 34-inch sheets and one electronic copy on a CD with data in P6 format.

C. The Preliminary Progress Schedule shall describe the activities to be accomplished and their dependency subject to all requirements under these Construction Schedule provisions, as appropriate. The Preliminary Progress Schedule will be used temporarily to record and monitor the progress of the Work until the Baseline Schedule, specified hereinafter, has been completely developed and favorably reviewed. Recorded data on the Preliminary Progress Schedule shall be incorporated into the Baseline Schedule during the first schedule update.

D. The Construction Manager shall review the Preliminary Progress Schedule and provide any comments, provide favorable review of the Preliminary Progress Schedule, or request a meeting to review the Preliminary Progress Schedule with the Contractor within ten (10) days of receipt of the schedule. If requested, the Contractor shall participate in a review and evaluation of the schedule with the Construction Manager. Any revisions necessary as a result of this review shall be resubmitted for review by the Construction Manager within five (5) days.

E. No progress payments will be made prior to submission and acceptance of the CPM Preliminary Schedule by the Construction Manager.

F. The Preliminary Progress Schedule shall be updated as required by Construction Manager until the Baseline Schedule, specified hereinafter, has been accepted.

## 1.08 BASELINE SCHEDULE

A. Baseline Schedule Submittal:
   1. The Contractor shall submit an acceptable Critical Path Method (CPM) Baseline Schedule to the Construction Manager within thirty-five (35) days after the receipt of the Notice to Proceed for all Work of the Project. Subsequent revisions to Baseline Schedule shall be submitted as set forth hereinafter.
   2. The Contractor shall produce and provide four (4) complete set each of time-scaled network logic diagrams and bar charts in color on 22-inch by 34- inch sheets and one electronic copy on a CD with data in P6 format. The network logic diagram shall be clear and legible. Critical activities shall be indicated in red color on both schedules.
   3. The Contractor shall include with the Baseline Schedule Submittal a signed statement from each Subcontractor listed on the Contractor's Bid Form Attachment D, DESIGNATION OF SUBCONTRACTORS which confirms they have evaluated the Contractor's Baseline Schedule and agree that the Baseline Schedule accurately depicts the quantity, logic and durations for all activities assigned to their company.
   4. The Construction Manager shall review the schedule and provide any comments, its favorable review of the schedule, or request a meeting to review the schedule with the Contractor within fifteen (15) days of receipt of the schedule. If requested, the Contractor shall participate in a review and evaluation of the proposed network diagrams and analysis by the Construction Manager. Any revisions necessary as a result of this review shall be resubmitted for review by the Construction Manager within ten (10) days.

When completed, the favorably reviewed schedule shall then be the schedule to be used by the Contractor for planning, organizing, and directing the work, and for reporting progress. If the Contractor thereafter desires to make significant changes in its method of operating and scheduling, the Contractor shall notify the Construction Manager in writing stating the reasons for the change.

5. No more than two (2) progress payments will be made prior to submission and acceptance of the CPM Baseline Schedule by the Construction Manager.
6. Failure to include an activity required for execution of the Work does not excuse Contractor from completing the Work and portions thereof within specified contract times and contract price. Failure of Contractor to include required schedule constraints, sequences or milestones in schedule shall not relieve Contractor of obligation to conform to requirements of Contract. Acceptance of schedule shall not waive Contract requirements. In event of conflict between accepted schedule and Contract requirements, terms of Contract shall govern at all times, unless requirements are waived in writing by the District.
7. Contractor shall not unilaterally change the accepted Baseline Schedule without the prior written notification to and acceptance and consent of the Construction Manager, excepting only the reporting of Actual Start, Actual Finish, and Activity Progress. The accepted Baseline Schedule shall be used for comparison with the current updated schedule, and possible revised schedules, during the Contract.

B. Baseline Schedule Requirements:
1. Prepare schedule utilizing Precedence Diagramming Method.
2. The Contractor's proposed CPM Baseline Schedule and all updates or revisions thereto, shall meet the following requirements:
3. Schedule and Project Completion- The Baseline Schedule and all updates or revisions shall show completion of the project within the required contract times and constraints on the Work. Failure to do so may result in the District terminating for cause under General Conditions 8.1, District's Right to Terminate Contract.
4. If the Contractor's schedule is based on less time than the maximum time allowed for milestone(s) or Contract completion no compensation for extended overhead expenses will be considered until the expiration of the entire time periods provided for in the Contract as adjusted by any time extensions granted other than compensable time extensions.
5. Acceptance of the Contractor's Base CPM Schedule, monthly updates or revised schedule, when based on less time than the maximum time allowed for milestone(s) or Contract completion does not serve to change any Contract duration, nor serve as a waiver of the Contractor's nor the District's right to utilize the full amount of time specified in the Contract, unless so modified in a Contract Change Order.
6. Prepare schedule utilizing activity durations in terms of working days. Do not exceed fifteen (15) working day duration on activities except concrete curing, submittal review, and equipment fabrication and deliveries. Where duration of continuous work exceeds fifteen (15) working days, subdivide activities by location, stationing, or other sub-element of the Work. Coordinate holidays and Furlough calendars to be observed with the City and incorporate them into the schedule as non-working days.

7. Schedule Logic: Schedule shall be assembled to show order in which Contractor proposes to carry out Work, indicate restrictions of access, availability of Work areas, and availability and use of manpower, materials and equipment. The Contractor shall indicate all dependencies and logic between activities so that it may be established what effect the progress of any one activity has on the schedule. The following criteria shall form basis for assembly of schedule logic:
    a. Which activities must be completed before subsequent activities can be started?
    b. Which activities can be performed concurrently?
    c. Which activities must be started immediately following completed activities?
    d. What major facility, equipment or manpower restrictions are required for sequencing these activities?
8. Resource Loading and Leveling: Contractor shall input manpower and equipment data on each schedule activity. Manpower data shall consist of the man-hours estimated to perform each task, categorized by trade. Equipment data shall consist of equipment hours estimated to perform each task, categorized by piece of equipment. Contractor shall optimize and level manpower and equipment requirements. Resource leveling shall reflect a reasonable plan for accomplishing Work. Individual activities may be sequenced within limits of available float. Critical or near critical paths resulting from use of manpower or equipment restraints shall be kept to a minimum. Near critical path identified as path with five (5) or less working days of float. The Construction Manager will not review the resources as these shall be deemed to be within the Contractor's means and methods of work. The Contractor shall determine and allocate the proper resources to complete the Project by the specified Contract completion date:
    a. After the Baseline Schedule is accepted by the Construction Manager, Contractor is to submit a schedule histogram depicting total craft manpower for Contractor's own labor forces and those of each subcontractor. This manpower schedule shall be submitted electronically on a flashdrive with one paper copy.
9. Network Activities- The selection and number of detailed network activities shall be subject to favorable review by the Construction Manager and shall meet the following requirements:
    a. All Work activities should be of sufficient detail to ensure adequate planning and execution of the Work and such that schedules provide an appropriate basis for monitoring and evaluating the progress of the Work. A work activity is defined as a single task that requires time and resources (manpower, equipment and/or material) to complete in a continuous operation, excluding submittal activities, review/acceptance activities, and fabrication/procurement activities. Durations for on-site work activities shall be in working days and shall not exceed ten (10) workdays. Passive on-site activities such as curing and testing periods can be in calendar days if desired by Contractor. All such passive on-site activities shall be included in the Contractor's schedule and durations should be as specified in the Contract Documents.

b. The submittal and approval of samples and equipment, fabrication of special material and equipment and their installation and testing. Should the Contractor expect multiple submittals and deliveries for materials or equipment from the same supplier, the Contractor shall show each planned submittal and delivery and the logic to the respective on-site Work activity(s).
c. The critical path shall be shown on all reports and on the graphic network logic diagram. The activities which constitute the critical path shall be identified.
d. Progress milestone events or other significant stages of completion, as defined in Section 00510, Agreement, Article 4 – Contract Times. System shutdown and tie-in dates must be identified and included in the schedule.
e. The lead time required for testing, inspection and other procedures required prior to acceptance of the work. All witnessed factory tests shall be shown as individual activities.
f. The activity numbers shall be grouped by responsibility, phases, milestones, work area, trade and subcontractor to provide logical summary activities.
g. All activities of the District and the Construction Manager that affect progress along with required contract dates for completion of all parts of the work.
h. All activities of utilities, regulatory agencies and permitting agencies.
i. All mobilization and demobilization activities, including temporary controls.
j. Schedule shall show all hydraulic testing of structures, pipe testing, field testing, training and demonstration periods as required. Field testing and training activities should be broken down to reflect all individual system and equipment components.
k. Float shall not be an activity unless approved by the Construction Manager.

10. Network Logic Diagram- The graphic network diagram shall include for each activity, the description, activity number, the estimated duration in workdays, and all activity relationship lines. The network diagram shall be drawn for the early start and early finish of all activities. The diagrams shall show elements of the project in detail and an entire project summary. Diagrams shall show the order and interdependence of all activities and sequence in which the work is to be accomplished as planned by the Contractor and its subcontractors. The basic concept of a network analysis diagram shall be followed to show how the start of a given activity is dependent on the completion of preceding activities and its completion restricts the start of following activities. The Primavera layout of the network logic diagrams shall be time-scaled and show the following as a minimum:
    a. Activity numbers and description.
    b. Activity duration and total float.
    c. Critical path, highlighted in red color.
    d. Relationships between activities and lag times, if any.
    e. Start, completion and milestone dates.
11. Primavera Bar Chart:
    a. The Primavera layout of the bar chart shall show the following as a minimum:
        1) Activity description.
        2) Early-start-early-finish, duration and total float time of activities.
        3) Critical path, highlighted in red color.

4) Percent complete on bar, highlighted in blue color.
5) Relationships between activities and lag times, if any.
6) Start, completion and milestone dates.

b. The layout of the columns, printed on left hand side of bar chart, shall include the following as a minimum:
1) Activity ID Number.
2) Activity Description.
3) Original Duration.
4) Remaining Duration.
5) Early Start, Early Finish, Late Start and Late Finish dates.
6) Percent Complete.
7) Current Total Float.
8) Change in Float since Original Baseline.
9) Change in Float since previous update.

12. Float:
a. “Total Float" or “Float” shall be defined as the difference between the early finish and late finish dates for an activity. On the CPM Schedule delineate the specified Contract duration and identify the planned completion of the Work as the final finish milestone. The time period between these two dates, if any, shall be considered float. Float in any activity, milestone completion date or Contract completion date shall be considered a resource available to both the District and the Contractor. Neither the District nor the Contractor has ownership of the float.
b. The parties agree that float, as properly shown on the baseline schedule and all updates thereto, is not for the exclusive benefit of either party. Consequently, either party may, without liability to the other for actual or liquidated damages for delay, delay a schedule activity provided that such delay shall not cause the float of the affected activity to become negative. If the float of the activity is already negative, as shown on the most recent schedule update, either party may delay such activity, without liability to the other for actual or liquidated damages for delay, provided that such delay shall not cause the negative float of the delayed activity to exceed the negative float of all other schedule activities. If the project has interim milestones with separate liquidated damages, only delays by the District to the Project Critical Path shall potentially entitle the Contractor to extended overhead costs and only subject to the limitations of General Conditions 8.04, Time Extensions.
c. Pursuant to these float sharing requirements, use of float suppression techniques such as preferential sequencing or logic, special lead or lag logic restraints, extended activity duration’s or imposed dates shall be cause for rejection of any schedule submittal.

13. District-furnished Equipment or Materials (If Applicable):
a. Immediately after Award of Contract, Contractor shall obtain from Construction Manager anticipated delivery dates of District-furnished equipment or materials if they are not already specified in the Contract Documents.
b. These dates shall be shown on Baseline Construction Schedule in same manner indicated by Construction Manager.

14. Baseline Tabular Report:
a. The Baseline Schedule submission should include a tabular report of all activities grouped by Area, Phases (as may be applicable), and sorted by early start, then total float, then early finish.

b. For each activity, the following information shall be provided:
   1) Activity ID and Description.
   2) Original Duration.
   3) Total Float.
   4) Early/Late Starts and Finishes.
   5) Responsibility.
c. This report should also include a project calendar indicating all non-working periods and an Activity Code dictionary which identifies all code values and code titles used.

## 1.09 WEATHER CONDITIONS AND WEATHER DAY ALLOWANCE

A. Seasonal weather conditions shall be considered in the planning and scheduling of work activity durations influenced by high or low ambient temperatures or precipitation to ensure the completion of the Work within the Contract Time. No time extensions will be granted for the Contractor's failure to take into account such weather conditions for the location of the Work and for the period of time in which the Work is to be accomplished.

B. The expected loss of working ten (10) days shall be included in a separate identifiable critical activity labeled "Weather Days Allowance" to be included as the last critical activity of the project schedule. When weather days are experienced, and are approved as such by the Construction Manager, the Contractor shall either:
   1. Increase the duration of the current critical activity(ies) by the number of weather days experienced.
   2. Add a critical activity to the schedule to reflect the occurrence of the weather day(s).

C. The duration of the weather day allowance activity shall be reduced as weather days are experienced and included in the schedule. Any remaining weather days in the weather day allowance activity at the completion of the project shall be considered as float and shall not be for the exclusive use or benefit of either the District or Contractor.

## 1.10 UPDATING THE BASELINE SCHEDULE

A. Contractor shall update the Baseline Schedule on a monthly basis (or at shorter intervals if deemed necessary by Construction Manager to identify corrections necessary, such as work activities ten (10) days or more behind schedule) for the purpose of recording and monitoring the progress of the work. The Updated Baseline Schedule shall incorporate changes mutually agreed upon by Contractor and Construction Manager during preceding periodic reviews and changes resulting from approved Change Orders and Field Orders.

B. The Contractor shall produce and provide four (4) complete sets each of time-scaled network logic diagrams and bar charts in color on 22-inch by 34-inch sheets and one electronic copy on a CD with data in P6 format. The network logic diagram shall be clear and legible. Critical activities shall be indicated in red color on both schedules.

C. Variance Reports:
   1. Variance Report: With each updated schedule submission, provide a computer generated Log Report using Acumen Fuse software listing all changes made between the previous schedule and current updated schedule. Identify the name of the previous schedule and name of the current schedule being compared showing all changes to the Schedule. This report will as a minimum show changes for: Added & Deleted Activities, Original Durations, Calendars, Descriptions, Constraints (added, deleted or changed), Added/Deleted Resources, Resource Quantities, Costs, Added/Deleted Relationships, Changed Relationship Lags, a Critical Path Analysis, Float Analysis, Open Ended Activity Analysis, a "Ribbon" Analysis and an Overall Scorecard Value. A narrative shall be included in the variance report stating the reason for the changes listed above.
   2. This variance report should also include a narrative explaining the reasons for the changes listed in item (1) above, any significant updates or revisions inputted in the schedule since last schedule update, current or anticipated problems affecting the progress of Work, impact of these problems and the measures taken to mitigate impact.
   3. The District will not make monthly progress payments to the Contractor until the Construction Manager has received and accepted all schedule updates and reports as herein specified:
      a. The Contractor should submit schedule updates and reports to Construction Manager at least five (5) days before Contractor's submission of its request for progress payment for same monthly period.

## 1.11 SCHEDULE REVISIONS

A. The conditions under which the Construction Manager may require revisions of the Construction Schedule include the following:
   1. When delay in completion of any work item or sequence of work items results in an estimated extension of project completion by either fifteen (15) working days or by five percent (5 percent) of the remaining duration of time to complete the Contract, whichever is less. This slippage duration may be reduced further for any contract time that is a critical fixed completion date which must be met.
   2. When delays in submittals or deliveries make re-planning or re-scheduling of the work necessary.
   3. When the schedule does not represent actual prosecution and progress of the work.
   4. When any change to the sequence of activities, the completion date for major portions of the work, or changes occur which affect the critical path.
   5. When Contract modification necessitates schedule revision.

## 1.12 WEEKLY SCHEDULE

A. Submit to Construction Manager, on the last working day of every week, a progress schedule showing the activities completed during the previous week and the Contractor's schedule of activities for the following three (3) weeks.

B. The Weekly Schedule may be a CPM schedule or a bar chart but shall utilize the logic and conform to the status of the current progress schedule. In the event that

the Weekly Schedule no longer conforms to the current schedule Contractor may be required to revise the schedule in accordance with Article, "Revisions to Schedule".

C. The activity designations and activity numbers used in the Weekly Schedule shall be consistent with those used in the Baseline Schedule and the monthly Schedule Updates.

D. The format of the Weekly Schedule shall be as agreed upon between the Contractor and the Construction Manager.

## 1.13 TIME IMPACT ANALYSIS

A. When change orders are initiated, delays are experienced, or the Contractor desires to revise the schedule logic, the Contractor shall submit to the Construction Manager a written Time Impact Analysis illustrating the influence of each change, delay, or Contractor request on the current contract schedule completion date. Each Time Impact Analysis shall include a fragmentary network analysis demonstrating how the Contractor proposes to incorporate the change order, delay, or Contractor request into the Schedule. The analysis shall demonstrate the time impact based on the date of occurrence of the change, delay or revision; the status of construction at that point in time; and the impact of all affected activities. The event times used in the analysis shall be those included in the latest updated copy of the CPM Schedule or as adjusted by mutual agreement between the Construction Manager and Contractor.

B. Activity time delays will not automatically mean that an extension of Contract Time is warranted or due the Contractor:
   1. It is possible that a strike or contract modification will not affect existing critical activities or cause non-critical activities to become critical, i.e., a strike or modification may result in only absorbing a part of the available total float that may exist within an activity chain of the network, thereby not causing any effect on the Contract completion date or time.
   2. The Contractor acknowledges and agrees that mitigation for delays due to changes, differing site conditions, suspension of the Work and other causes will require revision of preferential sequences of the Work before proposing an updated schedule which supports a delay to the Project as a whole. When a delay to the Project as a whole can be avoided by revising preferential sequencing, and the Contractor chooses not to implement the revisions, the Contractor will be entitled to a time extension but is not entitled to compensation for extended overhead.
   3. Float or slack shall not be for the exclusive use or benefit of the District or the Contractor. Extensions of time for performance will be granted only to the extent that the equitable time adjustments for the activity or activities affected exceeds the total float along the activity chain involved at the time the change was ordered or the delay occurred.

C. Time Impact Submittal and Review:
   1. Time Impact Analyses shall be submitted in triplicate and within fifteen (15) days after a delay occurs or with the Contractor's cost proposal in response to a notice of change from the Construction Manager. In cases where the Contractor does not submit a Time Impact Analysis for a specific change order, delay, or Contractor request within the specified period of time, then it is

mutually agreed that the particular change order, delay, or Contractor request has no time impact on the Contract completion date and no time extension is required:

a. Approval or rejection of Time Impact Analyses by the Construction Manager and the District will be made within fifteen (15) days after receipt of the Time Impact Analysis unless subsequent meetings and negotiations are necessary.
b. Upon approval, a copy of the Time Impact Analysis signed by the Construction Manager and District will be returned to the Contractor.
c. Upon mutual agreement by both parties, schedule revisions illustrating the influence of change orders, delays, and/or Contractor requests will be incorporated into the next schedule update.

## 1.14 RESPONSIBILITY FOR COMPLETION

A. Contractor agrees that at the sole judgment of Construction Manager, whenever it becomes apparent from the current monthly Updated Contract Baseline Schedule that the contract completion date and/or any milestone dates will not be met, Contractor will take the appropriate following actions, acceptable to Construction Manager, at no additional cost to District:
   1. Increase construction labor in such quantities and crafts as will substantially eliminate, in the judgment of Construction Manager, the backlog of work.
   2. Increase the number of working hours per shift, shifts per working day, working days per week, or the amount of construction equipment, or any combination of the foregoing, sufficiently to substantially eliminate, in the judgment of Construction Manager, the backlog of work. This paragraph shall not be construed to allow work outside the allowable hours and days specified in the Contract Documents.
   3. Reschedule activities to achieve maximum practical concurrence of completion of activities.

## 1.15 FINAL SCHEDULE SUBMITTAL

A. As a condition precedent to the release of retainage the final Schedule Update shall be identified by the Contractor as the As-Built Schedule.

B. The As-Built Schedule shall reflect the exact manner in which the project was constructed by reflecting actual start and completion dates for all activities accomplished on the project.

C. The As-Built Schedule shall be signed and certified by the Contractor's Project Manager and Responsible Scheduler as being an accurate record of the way in which the project was actually constructed.

## 1.16 CONTRACTOR'S DAILY REPORTS

A. Maintain daily job reports recording all significant activity on the project, including number of workers on site, active construction equipment used, notable deliveries, work activities, delays, interruptions or any problems encountered.

B. Submit a Contractor's Daily Report form, for an approval by the Construction Manager, to record this information and submit this form to the Construction

Manager no later than the following morning for the previous work day. See Section 01999, Referenced Forms, for an acceptable Contractor Daily Report form.

C. If there is no work performed on any given day, note the reasons for no work and submit a daily report to the Construction

D. Manager on those days also.

E. Failure to stay current with daily reporting will be just cause for the District not processing a progress payment until reports are submitted.

**END OF SECTION**

# SECTION 01326

# PHOTOGRAPHIC AND VIDEOGRAPHIC DOCUMENTATION

## PART 1 GENERAL

### 1.01 SUMMARY

A. Section includes requirements for photographs and videos.

B. The purpose of the photographs and videos is to document the condition of the facilities prior to the Contractor beginning work at the Project site, the progress of the Work, and the Project site after Substantial Completion of the Work.

C. The scope of the photographic and videographic documentation shall be the sole responsibility of the Contractor, but shall be acceptable to the Engineer.

D. Related sections:
   1. Section 01330 – Submittal Procedures.
   2. Section 01322 – Web Based Construction Document Management.
   3. Section 01770 – Contract Closeout

### 1.02 SUBMITTALS

A. Pre-construction photographs and videos: Submit prior to beginning work at the Project site.

B. Construction photographs and videos: Submit with each application for payment.

C. Post-construction photographs and videos: Submit with project closeout documents as specified in Section 01770 – Contract Closeout.

### 1.03 PHOTOGRAPHS

A. Provide a digital copy of each photograph for each area of Work:
   1. Project record documents:
      a. Catalog and index prints in chronological sequence.
      b. Include typed table of contents.

### 1.04 PRE-CONSTRUCTION PHOTOGRAPHS AND VIDEOS

A. Provide photographs and video of the condition entire site including each area of Work prior to the start of Work:
   1. Areas to be photographed and videoed shall include the site of the Work and all existing facilities, either on or adjoining the Project site, including the interior of existing structures, that could be damaged as a result of the Contractor's Work.
   2. Include general condition, structures, vegetation, staging, storing, working, parking areas and excavation areas.

## 1.05 CONSTRUCTION PHOTOGRAPHS AND VIDEOS

A. Provide photographs and videos of construction in each area of Work throughout progress of Work including a key plan designating where each photograph was taken.

B. Take site and interior photographs and videos from differing directions of building demolition, pre-excavation, footing excavation, soil testing, utility crossings, installation of bypass piping, excavation of access pits, installation of lining system in pipes, rehabilitation of manholes, building modifications, utilities, electrical and instrumentation modifications, and other applicable activities indicating relative progress of the work.

C. All downstream sewer piping and storm drains shall be CCTV'd prior to introducing sewer or water respectively to ensure no debris has been introduced during construction. Any damage to downstream facilities, obstructions in piping and/or sewer spills resulting from construction debris shall be paid for by the Contractor including but not limited to associated operator time, regulatory fines and lawsuits.

D. Take photos a maximum of 7 calendar days prior to submittal.

## 1.06 POST-CONSTRUCTION PHOTOGRAPHS AND VIDEOS

A. Provide photographs of the entire site including each area of Work at the completion of Work:
   1. Include general condition, structures, vegetation, staging, storing, working, parking areas and excavation areas.
   2. Take photos and video from same points in same direction as pre-construction examination.

B. Submittal of photos and videos is a condition of final payment.

# PART 2 PRODUCTS

## 2.01 MEDIA

A. Digital media:
   1. Flash Drive with minimum size of 32 GB. Provide additional flash drives as need for all required documentation.
   2. Provide photos as individual, indexed JPG files with the following characteristics:
      a. Compression shall be set to preserve quality over file size.
      b. Highest resolution JPG images shall be submitted. Resizing to a smaller size when high resolution JPGs are available shall not be permitted.
      c. JPG image resolution shall be 5 megapixels at 2,400 by 1,800 or higher.
      d. Images shall have rectangular clean images. Artistic borders, beveling, drop shadows, etc., are not permitted.
   3. Identification: On photograph, provide the following information:
      a. Date stamp: Unless otherwise indicated, date and time stamp each photograph as it is being taken so stamp is integral to photograph.

B. Videos:

1. Formatted for use with PC systems.
2. Video quality shall be 720p HD or greater in MPG, AVI, or MP4 format.
3. Digital color video format.
4. Minimize background noise to provide complete intelligibility of oral report.
5. Submit each video within 7 days of recording.

END OF SECTION

# SECTION 01330

# SUBMITTAL PROCEDURES

## PART 1 GENERAL

### 1.01 SUMMARY

A. Section Includes: Requirements and procedures for submitting Shop Drawings, Product Data, Samples, other submittals relating to products, and as specified in individual sections.

B. Submittals shall follow the procedures in this Section regardless of reference to this Section in the individual sections.

C. All submittals shall be transmitted pursuant to Section 01322 - Web Based Construction Document Management.

D. Approved Equal and Substitutions shall be as defined and managed pursuant to Section 01600 - Product Requirements.

E. Related Sections:
1. Section 01322 – Web Based Construction Document Management.
2. Section 01324 – Progress Schedules and Reports.
3. Section 01326 – Photographic and Videographic Documentation.
4. Section 01600 – Product Requirements.
5. Section 01770 – Contract Closeout.
6. Section 01782 – Operation and Maintenance Data.
7. Section 01999 – Referenced Forms

### 1.02 DEFINITIONS

A. Manufacturer's Instructions: Instructions, stipulations, directions, and recommendations issued in printed form by the manufacturer of a product addressing handling, installation, erection, and application of the product.

B. Shop Drawings: Drawings, diagrams, schedules, and other data specially prepared for the Work to illustrate some portion of the Work.

C. Product Data: Illustrations, standard schedules, performance charts, brochures, diagrams, and other information to illustrate materials or equipment for some portion of the Work. Product Data will also include engineering calculations and related information, where specified. Product Data will also include engineering calculations and related information, where specified.

D. Samples: Physical examples which illustrate materials, equipment, or workmanship and establish standards by which the Work will be judged.

E. Special Samples: Physical examples which illustrate materials, equipment or workmanship and establish standards by which the Work will be judged, and will be incorporated in the Work.

## 1.03 PROCEDURES

A. Within fifteen (15) calendar days after the Notice To Proceed, the Contractor shall submit a preliminary Schedules of Submittals which shall list each required submittal and the proposed times for submitting, reviewing, and processing each submittal.

B. Contractor shall submit a preliminary Project Schedule for the project as specified in Section 01324 - Progress Schedules and Reports.

C. Within thirty (30) calendar days after award of Contract, the Contractor shall submit all submittals required to start the project. The submittals should include but are not limited to the following items:

| | | |
|---|---|---|
| 1. | Site-Specific Contractor Safety Program (SSCSP) | 01160. |
| 2. | Project Baseline CPM Schedule | 01324. |
| 3. | Pre-Construction Video and Photos | 01326. |
| 4. | Water Pollution Control Plan | 01060. |

D. Contractor shall be responsible for furnishing the remaining submittals identified in the Schedule of Submittals in sufficient time for approval action, including resubmittals, without delaying the project.

E. Contractor shall be responsible for coordinating each submittal with fabrication, purchasing, testing, delivery, other submittals, and related activities that require sequential activity.

F. No extension of Contract Time will be authorized due to a failure to transmit submittals sufficiently in advance of the Work to permit processing.

G. Submittals shall be provided as described in Section 01322. Submittals which cannot be provided electronically, such as samples, shall be delivered to the District's main office or to the Engineering office at the District's treatment plant, unless another mutually agreeable place is designated.

H. Each submittal shall include a Submittal Transmittal Form in Section 01999 - Reference Forms, with the following additional information, where applicable:
   1. Subcontractor and major supplier.
   2. Reference submittal to Contract Documents by Drawing or detail.
   3. Variations from Contract Documents when variations are included in submittal.
   4. When applicable, follow Section 01600 - Product Requirements, to request for material substitution.

I. Each submittal shall be submitted using the District’s Web Based Construction Document Management system in Section 01322. Submit one electronic copy in a searchable Adobe Acrobat pdf format with bookmarks (tabs) for each separate components of the submittal. In addition, one full-size hard copy of any submittals as requested by the Construction Manager.

J. Submittals and subsequent resubmittals shall be in the following format:

"SUBMITTAL_XX.Y_ZZZZ_(Contractor Name)_(Submittal Name)"

Where "XX" is the sequential submittal number, "Y" is the revision number starting with 0, and "ZZZZ" is the associated specification number.

Example: "Submittal_17.0_05500_Company Name_Plug Valves.pdf"

K. Provide or furnish products and execute the Work in accordance with accepted submittals, unless in conflict with Contract Documents.

L. When minor deviations from Contract Documents are accepted, modify Contract Documents in accordance with the Conditions of the Contract.

M. Contractor to provide one (1) clean and conformed hard copy of each approved submittal to the Construction Manager.

## 1.04 SHOP DRAWINGS, PRODUCT DATA, AND SAMPLES

A. Submit Shop Drawings, Product Data, Samples, and other pertinent information in sufficient detail to show compliance with specified requirements.

B. Check, verify, and revise submittals as necessary to bring them into conformance with Contract Documents and actual field conditions:
   1. Determine and verify quantities, dimensions, specified design and performance criteria, materials, catalog numbers, and similar data.
   2. Coordinate submittal with other submittals and with the requirements of the Contract Documents.
   3. Excise or cross out non-applicable information and clearly mark applicable information with citations to, and terminology consistent with Contract Documents. On catalog cuts, clearly mark the items to be used, including proposed options and alternatives.

C. After completion of checking, verification, and revising; stamp, sign, and date submittals indicating review and approval by the Contractor; and submit to District:
   1. Stamp and signature indicates Contractor has satisfied shop drawing review responsibilities and constitutes Contractor's written approval of shop drawing.
   2. Shop drawings without Contractor's written approval will be returned for resubmission.

D. Submittal Drawings: Submit drawings prepared in AutoCAD, latest version.

E. Product Data and Manufacturer's Instructions: Submit one electronic copy.

F. Samples: Submit two (2) samples labeled with reference to applicable Specification Section and submittal number. Label will be returned with reviewer's selection when appropriate, comments, and stamp. Samples will not be returned unless return is requested in writing and additional sample is submitted.

G. Special Samples: Submit one (1) samples labeled with reference to applicable Contract Documents and submittal number. Samples and one (1) label will be returned for installation in the Work.

H. Assume risk of expense and delays when proceeding with work related to required submittals without review and acceptance.

I. Contractor to review all shop drawings submitted by Subcontractors for compliance with Contract Documents.

J. Contractor to distribute additional sets of samples to subcontractors, suppliers, fabricators, installers, etc. as required for the performance of the Work. Must show distribution on transmittal forms.

## 1.05 PERFORMANCE SPECIFICATIONS AND CONTRACTOR DESIGNED WORK

A. Work under this Contract may be specified by a combination of descriptive, performance, reference standard and proprietary specifications. In the event of conflict between any of the various specification methods used to specify a single item the order of precedence shall be the order in which the methods are listed in the preceding sentence. The terms used to describe types of Specifications are taken from the Construction Specification Institute (CSI) Handbook of Practice.

B. Where Specifications are used to define the characteristics of Contractor designed systems, items or components, the Contractor shall be fully responsible to design, engineer, manufacture, and install the systems, items and components to meet the specified functional requirements, performance requirements, quality standards, durability standards and conditions of use as well as all applicable codes, regulations and referenced trade or industry standards. The Contractor shall perform such design by employing engineers licensed in the State in which the Work is being constructed. The Contractor's design submittals shall include calculations and assumptions on which the design is based and shall be stamped and signed by appropriately licensed engineers.

C. Where performance type specifications are used or where pre-engineered or Contractor designed systems, elements, equipment or components are called for, the District, the Design Engineer and the Engineer shall have the right to rely on the Contractor's design. Favorable Review of the Contractor's design submittal shall be limited to acknowledgment that the design was prepared with the intent of meeting the specified performance criteria, but the Engineer's review shall not constitute a review of the design itself, of the designer's calculations, or of the effectiveness of the design in actually satisfying the specified criteria. Favorable review of the Contractor's design submittal shall not relieve the Contractor from full responsibility for the adequacy of the Contractor design.

## 1.06 ASSET MANAGEMENT DATA

A. Submit the Asset Management data as specified in Section 01782 - Operation and Maintenance Data.

## 1.07 MANUFACTURER’S INSTRUCTIONS

A. Submit manufacturer’s instructions wherever made available by manufacturers and when installation, erection, or application in accordance with manufacturer’s instructions is required by the Specifications.

B. Submit manufacturer's instructions prior to installation, erection, or application of equipment and other project components. Submit manufacturer's instructions in accordance with requirements for Product Data.

## 1.08 DISTRICT'S REVIEW

A. District's review of submittals shall not release Contractor from Contractor's responsibility for performance or requirements of Contract Documents. Neither shall District's review release Contractor from fulfilling purpose of installation nor from Contractor's liability to replace defective work.

B. Do not consider submittals as Contract Documents. Purpose of submittals is to demonstrate how Contractor intends to conform to the design concepts.

C. District's review of shop drawings, samples, or test procedures will be only for conformance with design concepts and for compliance with information given in Contract Documents:
   1. District's review does not extend to:
      a. Accuracy of dimensions, quantities, or performance of equipment and systems designed by Contractor.
      b. Contractor's means, methods, techniques, sequences, or procedures except when specified, indicated on the Drawings, or required by Contract Documents.
      c. Safety precautions or programs related to safety which shall remain the sole responsibility of the Contractor.

D. Except as may be provided in subsequent specifications or specified herein, a submittal will be returned within thirty (30) calendar days after receipt:
   1. Submittals will be reviewed with appropriate comments as indicated below:
      a. If the review indicates that the material, equipment, or work method complies with the project specifications, submittal copies will be marked "NO EXCEPTIONS TAKEN". In this event, the Contractor may begin to implement the work method or incorporate the material or equipment covered by the submittal.
      b. If the review indicates limited corrections are required, copies will be marked "MAKE CORRECTIONS NOTED". The Contractor may begin implementing the work method or incorporating the material and equipment covered by the submittal in accordance with the noted corrections. Where submittal information will be incorporated in O&M data, a corrected copy shall be provided.
      c. If the review reveals that the submittal is insufficient or contains incorrect data, copies will be marked "AMEND AND RESUBMIT". Except at his own risk, the Contractor shall not undertake work covered by this submittal until it has been revised, resubmitted and returned marked wither "NO EXCEPTIONS TAKEN" or "MAKE CORRECTIONS NOTED".
      d. If the review indicates that the material, equipment, or work method does not comply with the project specifications, copies of the submittal will be marked "REJECTED – SEE REMARKS". Submittals with deviations which have not been identified clearly may be rejected. Except at his own risk, the Contractor shall not undertake the work covered by such submittals until a new submittal is made and returned marked either "NO EXCEPTIONS TAKEN" or "MAKE CORRECTIONS NOTED".

e. Product Data submittals for information only:
   1) Such information is not subject to submittal review procedures and shall be provided as part of the work under this contract and its acceptability determined under normal inspection procedures.
   2) Product data review status will be classified similarly to other submittals.

2. When a submittal cannot be returned within that period, District will, within a reasonable time after receipt of the submittal, give notice of the date by which that submittal will be returned.
3. A longer review duration will be required for large and complex submittals, particularly, but not limited to, those that require review by multiple engineering disciplines or where multiple sub-systems are part of a larger complex system. Identifications of submittals that are considered to be large and complex will be made jointly by the District and the Contractor, and shall be identified in the submittal schedule specified in Section 01324 - Progress Schedules and Reports.

E. Submittals returned as “REVISE AND RESUBMIT” contain specific attention in writing to revisions other than the corrections called for by the District on previous submittals. Rejected submittals contain remarks relative to further submittal. The resubmittal will be returned within thirty (30) calendar days after receipt.

F. All resubmittals must be complete and not piecemeal. If a resubmittal is required it shall be submitted in its entirety.

G. District will be entitled to rely upon the accuracy or completeness of designs, calculations, or certifications made by licensed professionals accompanying a particular submittal whether or not a stamp or seal is required by Contract Documents or Laws and Regulations.

H. Costs incurred by District as a result of additional reviews of a particular submittal after the second time it has been reviewed shall be borne by Contractor. Reimbursement to District will be made by deducting such costs from Contractor’s subsequent partial payments.

I. Costs incurred by unnecessary submittals, such as submitting on multiple products for the same requirement for the convenience of the Contractor, shall be borne by Contractor. Reimbursement to District will be made by deducting such costs from Contractor’s subsequent partial payments.

## 1.09 MINOR OR INCIDENTAL PRODUCTS AND EQUIPMENT SCHEDULES

A. Shop Drawings of minor or incidental fabricated products will not be required, unless requested.

B. Submit tabulated lists of minor or incidental products showing the names of the manufacturers and catalog numbers, with Product Data and Samples as required to determine acceptability.

## 1.10 SUBMITTALS FOR INFORMATION OR RECORD ONLY

A. Submit one electronic copy.

B. Mill Test Reports:
   1. Submit one electronic copy of factory and mill test reports for record only.
   2. Do not incorporate Products in the Work which have not passed testing and inspection satisfactorily.
   3. Contractor shall pay for mill and factory tests.

## 1.11 PROJECT LIST OF SUBMITTALS

A. The Contractor shall develop a comprehensive Master Submittal List of all specified submittals. The list shall be serially numbered in accordance with the appropriate specification section. The list shall be developed and submitted to the Construction Manager for review within fourteen (14) days following the Notice to Proceed. The Construction Manager will conduct a meeting to review the Master Submittal List with the Contractor within five (5) working days following receipt of the list.

B. The Contractor shall develop a schedule for the submission and review of all specified submittals for the project. The schedule shall be developed in accordance with the Section 01324, Construction Progress Schedule and Reports. The schedule shall include individual activities for submission and review (and fabrication and delivery for equipment and material) for each submittal. The submittal schedule shall be a separate subnet of the master CPM construction schedule with each submittal activity linked to the appropriate construction activity. Every projected submittal shall be listed and incorporated into the schedule.

C. The Contractor shall meet at least once per month with the Construction Manager to review the status of all submittals. In addition, the Contractor shall develop and transmit monthly, a written list of the submittals which require review within the following ninety (90) days. The list of projected submittals shall include the estimated date of submission for each submittal and a reference Master Submittal List for each item to be included in the submittal.

D. This section shall not supersede or modify any specific requirements for submittals or the submittal process described elsewhere in these specifications, but shall be a supplement to the existing requirements.

END OF SECTION

# SECTION 01340

# REQUEST FOR INTERPRETATION

## PART 1 GENERAL

### 1.01 GENERAL REQUIREMENTS

A. The Contractor shall prepare a Request for Interpretation (RFI) when additional information, clarification or interpretation of the Contract Documents is needed. RFIs may also be used for apparent conflicts, inconsistencies, ambiguities, or omissions. “Request for Interpretation” and “Request for Information” shall have the same meaning.

B. RFIs shall be submitted to the Construction Manager immediately upon discovery, but no less than fifteen (15) days prior to the start date of the activities related to the clarification, based on the latest updated and accepted construction schedule. Any work undertaken prior to receipt of an RFI response shall be at the risk of Contractor.

C. RFIs generated during submittal and shop drawing preparation must be submitted by the Contractor sufficiently in advance to not only allow for investigation and preparation of a response, but also for inclusion of the response into the submittal and shop drawing. Failure by the Contractor to provide sufficient time will not be cause for entitlement to a time extension.

D. The Contractor is responsible for its cost to implement and administer RFIs throughout the Contract duration. Regardless of the number of RFIs submitted, the Contractor will not be entitled to additional compensation.

E. RFIs shall not be used for submittals or for substitute of material, equipment or for waiving of requirements.

### 1.02 SUBMITTAL

A. Before submitting each RFI, the Contractor shall carefully review the following relevant information:
   1. All field measurements, quantities, dimensions, specified performance criteria, installation requirements, materials, catalog numbers, and similar information with respect thereto.
   2. All materials with respect to intended use, fabrication, shipping, handling, storage, assembly, and installation pertaining to the performance of the Work.
   3. All information relative to means, methods, techniques, sequences, and procedures of construction and safety precautions and programs incident thereto.
   4. The coordination of each Shop Drawing or Sample with other Shop Drawings and Samples and with the requirements of the Work and the Contract Documents.
   5. The Contract Documents.
   6. The Project correspondence and documentation.

B. RFIs shall be submitted on the RFI Form found Section 01999, Reference Forms, via the District-furnished, Web Based Construction Document Management system in accordance with Section 01322. Each RFI shall deal with only one topic, item, issue or system.

C. RFIs shall clearly describe the problem and specifically state what is needed. Relevant portions of the Contract Documents shall be cited, marked-up and attached.

D. FRIs shall be named using the following format:

"RFI_XX.Y_(Contractor Name)_(Description)"

Where "XX" is the sequential RFI number, and "Y" is the revision number starting with 0.

E. The Contractor shall review each RFI before submitting and compare it with the Contract Documents to verify that a response is required. RFIs will only be accepted from the Contractor and not from subcontractors or suppliers.

F. A recommendation or proposed solution may be included when appropriate or expedient.

G. Known schedule or cost impacts shall be noted in the RFI.

## 1.03 RESPONSE

A. The Construction Manager will respond in writing to an RFI from the Contractor within a reasonable amount of time, but no more than fifteen (15) calendar days following receipt of RFI from the Contractor. The Contractor shall indicate a priority for responses if more than five (5) RFIs are pending at the same time.

B. The Construction Manager and/or Design Engineer's review of an RFI will be only to provide clarification and interpretation of the Contract Documents.

C. The Contractor shall reply within ten (10) calendar days if there is disagreement concerning the RFI response.

D. Subsequent resubmittals shall be identified with the same RFI number and a consecutive letter designation. Resubmittals shall clearly state the reason for resubmitting.

E. RFIs will not be recognized or accepted, if in the opinion of the Construction Manager, one of the following conditions exists:
   1. The Contractor submits an RFI as a submittal.
   2. The Contractor submits the RFI under the pretense of a Contract Documents discrepancy or omission without thoroughly reviewing the documents. In this case, the Contractor shall be responsible for both the Construction Manager's and Design Consultant's administrative costs to process the RFI. Such costs may be deducted from the Contractor's progress payments.
   3. The Contractor submits the RFI in a manner that suggests that specific portions of the Contract Documents are assumed to be excluded, or be taken as an isolated portion of the Contract Documents in part rather than whole.

4. The Contractor submits an RFI in an untimely manner without proper coordination and scheduling of work or related trades.

F. The Construction Manager and/or Design Engineer's review shall not relieve the Contractor from the responsibility for a variation from the requirements of the Contract Documents unless the Contractor has in writing called attention to each such variation at the time of each RFI submittal and Construction Manager has given written approval of each such variation by specific written notation thereof incorporated in the RFI review; nor will any review by District relieve Contractor from responsibility for compliance with the requirements for careful review above.

G. The Construction Manager and/or Design Engineer's review will not extend to means, methods, techniques, sequences, or procedures of construction (except where a particular means, method, technique, sequence, or procedure of construction is specifically and expressly called for by the Contract Documents) or to safety precautions or programs incident thereto.

H. The Construction Manager may furnish the Contractor additional detailed written instructions to further explain the work, and such instructions shall be a part of the Contract Documents. Clarifications will be issued using the above RFI system and the Field Order form found in Section 01999 - Referenced Forms. Should additional detailed instructions in the opinion of the Contractor constitute work in excess of the scope of the Contract, the Contractor shall submit notification immediately and written notification thereof to the Construction Manager no more than seven (7) days following receipt of such instruction, and in any event prior to the commencement of work thereon. If the Construction Manager considers it justified, the instructions of the Engineer will be revised or a proposed change order will be issued for the Owner's consideration. The Contractor shall have no claim for additional compensation or extension of the schedule because of any such additional instructions unless the Contractor provides the Construction Manager written notice thereof within the time frame specified above. In addition, the Contractor shall within fifteen (15) days from the date of notification provide detailed justification and analysis as well as complete pricing and schedule CPM fragmentary network to support any request for time extension.

I. The District's review shall not relieve the Contractor from the responsibility for a variation from the requirements of the Contract Documents unless the Contractor has in writing called attention to each such variation at the time of each RFI submittal and Construction Manager has given written approval of each such variation by specific written notation thereof incorporated in the RFI review; nor will any review by District relieve Contractor from responsibility for compliance with the requirements for careful review above.

END OF SECTION

# SECTION 01355

# STORMWATER POLLUTION PREVENTION

## PART 1 GENERAL

### 1.01 SUMMARY

A. Section includes:
   1. Requirements for the preparation and implementation of the Stormwater Pollution Prevention Plan (SWPPP) for the Contractor's construction activities. This document (and other identified in this Section will be used for the purpose of applying for and obtaining a State of California General Construction Activity Stormwater Permit. This permit authorizes the discharge of stormwater associated with construction activities from the construction site.

### 1.02 REFERENCES

A. National Pollutant Discharge Elimination System (NPDES).

B. State of California, State Water Resources Control Board, Regional Water Quality Control Board (SWRCB).

C. United States Code of Federal Regulation (CFR):
   1. 40 - Protection of Environmental:
      a. 117 - Determination of reportable quantities for hazardous substance.
      b. 302 - Designation, reportable quantities, and notification.

### 1.03 SUBMITTALS

A. Construction General Permit:
   1. The Contractor shall prepare and submit all Permit Registration Documents (PRDs) to the Engineer for review, approval, and certification by the Legally Responsible Person (LRP) prior to start of work and mobilization:
      a. The LRP will electronically submit the PRDs to the Stormwater Multiple Application and Report Tracking System (SMARTS) to obtain approval of the Construction General Permit (CGP).
   2. The PRDs shall include but are not limited to the Notice of Intent (NOI), Risk Determination Worksheet, Site Maps, Stormwater Pollution Prevention Plan (SWPPP), Annual Fees and Owner Certification. It shall also include all other reports, calculations, studies, exhibits, and documentation required to obtain the CGP.
   3. Contractor shall provide a Qualified SWPPP Practitioner (QSP), who will be responsible for maintaining the existing CGP active throughout the duration of the project:
      a. Contractor shall be responsible for providing all reports required by the CGP (monitoring, inspection, Rain Event Action Plans, sampling, exceedance reports, annual reports, etc.) to the Engineer for review.
      b. Upon approval, the Contractor’s QSP shall upload the information to SMARTS.

c. Time-sensitive reports involving monitoring data shall be provided as soon as the information is made available.
d. All other reports shall be provided to the Engineer a minimum of 2 weeks prior to their deadline for submittal to the SWRCB through SMARTS.
e. All CGP documents shall be submitted to the Owner for reference, and a copy shall be located on site at all times.

B. Pollution Prevention Plan:
1. Prepare and submit a site-specific Stormwater Pollution Prevention Plan (SWPPP) in accordance with Section A of the General Construction Activity Stormwater Permit to the Owner for reference.
2. Prepare and submit a monitoring program and reporting plan in accordance with Section B of the General Construction Activity Stormwater Permit to the Owner for reference.
3. Submit to the Owner for reference a Stormwater Pollution Prevention Plan detailing the placement of physical Best Management Practices (BMPs) required for installation and the methods used to comply with those BMPs directed at operational procedures, Monitoring Program, and Reporting Plan.
4. The plan shall specifically address and detail changes from the alternatives called out in this Section. The Contractor's preferred techniques shall show how it will comply with the stated objectives of the program.
5. The SWPPP shall be prepared and amended by a Qualified SWPPP Developer (QSD), as defined by the CGP.

C. Contractor shall submit a copy of the BMP Handbook with each BMP to be utilized check marked to show compliance or marked to show deviation.

D. The entire plan shall be kept and maintained by the Contractor on the construction site during the duration of the project.

E. Contractor shall be responsible for taking the proper actions to prevent contaminants and sediments from entering the storm sewer drainage system should any unforeseen circumstance occur. The Contractor shall take immediate action if directed by the Engineer, or if the Contractor observes contaminants and/or sediments entering the storm drainage system, to prevent further stormwater from entering the system.

## 1.04 REGULATORY REQUIREMENTS

A. Contractor shall comply with the State Water Resources Control Board, Regional Water Quality Control Board, county, city, and other local agency requirements regarding stormwater discharges and management.

B. Contractor shall not begin any construction work until the Owner receives the State of California General Construction Activity Stormwater Permit. The Contractor shall allow the Owner 30 days to obtain this permit after receipt of the information listed in this Section.

C. Contractor shall comply with the following prohibitions and limitations, which are contained in the Stormwater Permit:
1. Discharge prohibitions:

a. Discharges of materials other than stormwater, which are not otherwise regulated by a NPDES permit, to a separate stormwater sewer system or water of the nation are prohibited.
b. Stormwater discharges shall not cause or threaten to cause pollution, contamination (including sediment), or nuisance.
c. Stormwater discharges regulated by this general permit shall not contain a hazardous substance equal to or in excess of a reportable quantity listed in 40 CFR 117 and 40 CFR 302.

2. Receiving water limitations:
   a. Stormwater discharges to any surface or groundwater shall not adversely impact human health or the environment.
   b. Stormwater discharge shall not cause or contribute to a violation of any applicable water quality standards contained in the California Ocean Plan, Inland Surface Waters and Enclosed Bays and Estuaries Plan, or the applicable Regional Water Board's Basin Plan.

## 1.05 STORMWATER POLLUTION PREVENTION PLAN IMPLEMENTATION

A. Contractor's QSP shall implement all activities required by the General Permit and as detailed in the Stormwater Pollution Prevention Plan, Monitoring Program, and Reporting Plan.

## 1.06 NON-STORMWATER MANAGEMENT

A. Stormwater Pollution Prevention Plan shall discuss any non-stormwater sources (i.e., landscaping irrigation, pipe flushing, street washing, and dewatering). In addition, the Plan shall include standard observation measures and best management practices, including best available technologies economically achievable and best conventional pollutant control technologies that are to be implemented in order to reduce the pollutant loading to the waters.

## 1.07 AMENDMENTS

A. Contractor's QSP shall amend the Stormwater Pollution Prevention Plan, Monitoring Program, and Reporting Plan whenever there is a change in construction or operations which may affect the discharge of pollutants to stormwater.

B. The Stormwater Pollution Prevention Plan shall also be amended if it is in violation of any conditions of the general permit or has not achieved the general objective of reducing pollutants in stormwater discharges.

C. All amendments shall be completed at no additional cost to the Owner.

## 1.08 ANNUAL SUMMARY

A. Contractor:
   1. Prepare an annual summary report (annual report) in accordance with all Regional Water Quality Control Board requirements.
   2. Utilize the annual report form available in the SMARTS and submit it to the Engineer a minimum of 2 weeks prior to the deadline for submittal.
   3. Upon approval of the report by the Engineer, the LRP will review and certify the report for final submittal via SMARTS.

## 1.09 NOTICE OF TERMINATION

A. Contractor shall provide all necessary information for the completion of a Notice of Termination (NOT) upon completion of all construction activities (refer to Section C of the General Construction Activity Stormwater Permit for general requirements). Upon review of the information submitted, the LRP will certify and submit the NOT via SMARTS.

# PART 2 PRODUCTS

Not Used.

# PART 3 EXECUTION

## 3.01 GENERAL REQUIREMENTS

A. Nonhazardous material/waste management:
   1. Designated area: The Contractor shall propose designated areas of the project site, for approval by the Engineer, suitable for material delivery, storage, and waste collection that, to the maximum extent practicable, are near construction entrances and away from catch basins, gutters, drainage courses, and creeks.
   2. Granular material:
      a. Contractor shall store granular material at least 50 feet away from catch basin and curb returns.
      b. Contractor shall not allow granular material to enter storm drains, creeks, or rivers.
      c. When rain is forecast within 24 hours or during wet weather, the Engineer may require the Contractor to cover granular material with a tarpaulin and to surround the material with sand bags:
         1) All stockpiles are required to be protected immediately if they are not scheduled to be used within 14 days.
   3. Dust control: The Contractor shall use reclaimed water to control dust on a daily basis or as directed by the Construction Manager.
   4. Street sweeping and vacuuming:
      a. At the end of each working day or as directed by the Engineer, the Contractor shall clean and sweep roadways and on-site paved areas of all materials attributed to or involved in the work.
      b. Contractor shall not use water to flush down streets in place of street sweeping.
      c. Additionally, the Contractor shall not use kick brooms or sweeper attachments.

B. Spill prevention and control:
   1. Contractor shall keep a stockpile of spill cleanup materials, such as rags or absorbents, readily accessible on-site.
   2. Contractor shall immediately contain and prevent leaks and spills from entering storm drains, and properly clean up and dispose of the waste and cleanup materials:

a. If the waste is hazardous, the Contractor shall dispose of hazardous waste only at authorized and permitted treatment, storage, and disposal facilities, and use only licensed hazardous waste haulers to remove the waste off-site, unless quantities to be transported are below applicable threshold limits for transportation specified in State and Federal regulations.

3. Contractor shall not wash any spilled material into streets, gutters, storm drains, creeks, or rivers and shall not bury spilled hazardous materials.
4. Contractor shall immediately report any hazardous materials spill to the Owner and Engineer for reporting to all applicable regulatory agencies.

C. Vehicle/equipment cleaning:
1. Contractor shall not perform vehicle or equipment cleaning on-site or in the street using soaps, solvents, degreasers, steam cleaning equipment, or equivalent methods.
2. Contractor shall perform vehicle or equipment cleaning, with water only, in a designated, bermed area that will not allow rinse water to run off-site or into streets, gutters, storm drains, creeks, or rivers.

D. Vehicle/equipment maintenance and fueling:
1. Contractor shall perform maintenance and fueling of vehicles or equipment in designated, bermed area(s) or over a drip pan that will not allow run-on of stormwater or runoff of spills.
2. Contractor shall use secondary containment, such as a drip pan, to catch leaks or spills any time that vehicle or equipment fluids are dispensed, changed, or poured.
3. Contractor shall keep a stockpile of spill cleanup materials, such as rags or absorbents, readily accessible on-site.
4. Contractor shall clean up leaks and spills of vehicle or equipment fluids immediately and dispose of the waste and cleanup materials as hazardous waste, as described in section "Spill prevention and control" above.
5. Contractor shall not wash any spilled material into streets, gutters, storm drains, creeks, or rivers and shall not bury spilled hazardous materials.
6. Contractor shall report any hazardous materials spill to the Owner and Engineer and all applicable regulatory agencies.
7. Contractor shall inspect vehicles and equipment arriving on-site for leaking fluids and shall promptly repair leaking vehicles and equipment. Drip pans shall be used to catch leaks until repairs are made.
8. Contractor shall recycle waste oil and antifreeze, to the maximum extent practicable.
9. The Contractor shall comply with Federal, State, and City requirements for aboveground storage tanks.

E. Contractor training and awareness:
1. Contractor’s QSP shall train all employees/subcontractors on the stormwater pollution prevention requirements contained in these specifications.
2. Contractor’s QSP shall inform subcontractors of the stormwater pollution prevention contract requirements and include appropriate subcontract provisions to ensure that these requirements are met.
3. Contractor shall post warning signs in areas treated with chemicals.
4. Contractor shall paint new, reset, or raised catch basins, constructed as part of the project, with a "No Dumping" stencil.

## 3.02 SPECIFIC REQUIREMENTS

A. Paving operations:
   1. Project site management:
      a. When rain is forecast within 24 hours or during wet weather, the Engineer may prevent the Contractor from paving.
      b. Engineer may direct the Contractor to protect drainage courses by using control measures, such as earth dike, straw bale, and sand bag, to divert runoff or trap and filter sediment in addition to those already shown on the construction plan sheets.
      c. Contractor shall place drip pans or absorbent material under paving equipment when not in use.
      d. Contractor shall cover catch basins and manholes when paving or applying seal coat, tack coat, slurry seal, or fog seal.
      e. If the paving operation includes an on-site mixing plant, the Contractor shall comply with applicable Federal, State, and local General Industrial Activities Stormwater Permit requirements.
   2. Paving waste management:
      a. Contractor shall not sweep or wash down excess sand (placed as part of a sand seal or to absorb excess oil) into gutters, storm drains, or creeks:
         1) Instead, the Contractor shall either collect the sand and return it to the stockpile, or dispose of it in a trash container.
      b. Contractor shall not use water to wash down fresh asphalt concrete pavement.

B. Saw cutting:
   1. During saw cutting, Contractor shall cover or barricade catch basins using control measures, such as filter fabric, straw bales, sand bags, and fine gravel dams, to keep slurry out of the storm drain system. When protecting a catch basin, the Contractor shall ensure that the entire opening is covered.
   2. Contractor shall vacuum saw cut slurry and pick up the waste prior to moving to the next location or at the end of each working day, whichever is sooner.
   3. If saw cut slurry enters catch basins, the Contractor shall remove the slurry from the storm drain system immediately.

C. Concrete, grout, and mortar waste management:
   1. Material management: Contractor shall store concrete, grout, and mortar away from drainage areas and ensure that these materials do not enter the storm drain system.
   2. Concrete truck/equipment washout:
      a. Contractor shall not washout concrete trucks or equipment into streets, gutters, storm drains, creeks, or rivers:
         1) Washout areas should be located at least 50 feet from storm drains, open ditches, or water bodies.
      b. Contractor shall perform washout of concrete trucks or equipment in a designated area:
         1) Washout site should be lined so there is no discharge into the underlying soil.

3. Exposed aggregate concrete wash water:
   a. Contractor shall avoid creating runoff from washing of exposed aggregate concrete. Contractor shall collect and return sweepings from exposed aggregate concrete to a stockpile or dispose of the waste in a trash container.

END OF SECTION

# SECTION 01410

# REGULATORY REQUIREMENTS

## PART 1 GENERAL

### 1.01 SUMMARY

A. Section includes: Regulatory authorities and codes.

### 1.02 APPLICABLE CODES

A. California Code of Regulations (CCR), California Building Standards Code, CCR Title 24:
   1. Building code:
      a. California Building Code (CBC), Title 24, Part 2 – 2022.
   2. Electrical code:
      a. California Electrical Code (CEC), Title 24, Part 3 – 2022.
   3. Mechanical code:
      a. California Mechanical Code (CMC), Title 24, Part 4 – 2022.
   4. Plumbing code:
      a. California Plumbing Code (CPC), Title 24, Part 5 – 2022.
   5. Energy code:
      a. California Energy Code (CEC), Title 24, Part 6 – 2022.
   6. Historical building code:
      a. California Historical Building Code (CHBC), Title 24, Part 8 – 2022.
   7. Fire code:
      a. California Fire Code (CFC), Title 24, Part 9 – 2022.
   8. Existing building code:
      a. California Existing Building Code (CEBC), Title 24, Part 10 – 2022.
   9. Green building standards code:
      a. California Green Building Standards Code (CALGreen), Title 24, Part 11 – 2022.

## PART 2 PRODUCTS

Not used

## PART 3 EXECUTION

Not used

END OF SECTION

# SECTION 01424

# ABBREVIATIONS

## PART 1 GENERAL

### 1.01 SUMMARY

A. Section Includes: Abbreviations and meanings.

### 1.02 INTERPRETATIONS

A. Interpret abbreviations by context in which abbreviations are used.

### 1.03 ABBREVIATIONS

A. Abbreviations used to identify Reference Standards:

| | |
|---|---|
| AA | Aluminum Association |
| AAMA | Architectural Aluminum Manufacturers Association |
| AAN | American Association of Nurserymen |
| AASHTO | American Association of State Highway and Transportation Officials |
| ABC | Associated Air Balance Council |
| ABPA | Acoustical and Board Products Association |
| ACI | American Concrete Institute |
| ACIL | American Council of Independent Laboratories |
| ADC | Air Diffusion Council |
| ABMA | American Bearing Manufacturers' Association (formerly AFBMA, Anti-Friction Bearing Manufacturers' Association) |
| AGA | American Gas Association |
| AGC | Associated General Contractors |
| AGMA | American Gear Manufacturers' Association |
| AI | Asphalt Institute |
| AIA | American Institute of Architects |
| AIMA | Acoustical and Insulating Materials Association |
| AISC | American Institute of Steel Construction |
| AISI | American Iron and Steel Institute |
| AITC | American Institute of Timber Construction |
| AMCA | Air Moving and Conditioning Association |
| AMG | Arizona Masonry Guild |
| ANSI | American National Standards Institute |
| APA | American Plywood Association |
| API | American Petroleum Institute |
| ARI | Air Conditioning and Refrigeration Institute |
| ASAHC | American Society of Architectural Hardware Consultants |
| ASHRAE | American Society of Heating, Refrigeration and Air Conditioning Engineers |
| ASME | American Society of Mechanical Engineers |
| ASTM | American Society for Testing and Materials |
| AWI | Architectural Woodwork Institute |
| AWPA | American Wood Preservers Association |
| AWPI | American Wood Preservers Institute |

| | |
|---|---|
| AWS | American Welding Society |
| AWSC | American Welding Society Code |
| AWWA | American Water Works Association |
| | |
| BHMA | Builders Hardware Manufacturers Association |
| BIA | Brick Institute of America |
| BSI | Building Stone Institute |
| | |
| CLFMI | Chain Link Fence Manufacturers Institute |
| CPSC | U.S. Consumer Product Safety Commission |
| CRA | California Redwood Association |
| CRI | Carpet and Rug Institute |
| CRSI | Concrete Reinforcing Steel Institute |
| CS | Commercial Standards |
| CSI | Construction Specifications Institute |
| CTI | Ceramic Tile Institute |
| | |
| DHI | Door and Hardware Institute |
| | |
| EIFS | Exterior Insulation and Finish System |
| EJCDC | Engineers Joint Contract Documents Committee |
| | |
| FGMA | Flat Glass Marketing Association |
| FIA | Factory Insurance Association |
| FM | Factory Mutual |
| FS | Federal Specifications |
| FTI | Facing Tile Institute |
| | |
| GA | Gypsum Association |
| | |
| ICBO | International Conference of Building Officials |
| IEEE | Institute of Electrical and Electronics Engineers |
| | |
| MAG | Maricopa Association of Governments |
| MIA | Marble Institute of America |
| ML/SFA | Metal Lath/Steel Framing Association |
| MS | Military Specifications |
| | |
| NAAMM | National Association of Architectural Metal Manufacturers |
| NAPA | National Asphalt Pavement Association |
| NBHA | National Builders Hardware Association |
| NCMA | National Concrete Masonry Association |
| NEC | National Electrical Code |
| NECA | National Electrical Contractors Association |
| NETA | International Electrical Testing Association |
| NEMA | National Electrical Manufacturers Association |
| NFPA | National Fire Protection Association |
| NFPA | National Forest Products Association |
| NIST | National Institute of Standards and Technology |
| NMWIA | National Mineral Wood Insulation Association |
| NPCA | National Paint and Coatings Association |
| NRCA | National Roofing Contractors Association |
| NTMA | National Terrazzo and Mosaic Association |

| | |
|---|---|
| NWMA | National Woodwork Manufacturer's Association |
| PCA | Portland Cement Association |
| PCI | Prestressed Concrete Institute |
| PDCA | Paint and Decorating Contractors of America |
| PDI | Plumbing and Drainage Institute |
| PEI | Porcelain Enamel Institute |
| PS | Product Standard |
| RTI | Resilient Tile Institute |
| SAE | Society of Automotive Engineers |
| SCPA | Structural Clay Products Association |
| SDI | Steel Door Institute |
| SIGMA | Sealed Insulating Glass Manufacturers Association |
| SJI | Steel Joist Institute |
| SMACNA | Sheet Metal and Air Conditioning Contractors National Association |
| SSPC | Steel Structures Painting Council |
| TCA | Tile Council of America |
| UBC | Uniform Building Code (ICBO) |
| UL | Underwriters Laboratories, Inc. |
| USDA | United States Department of Agriculture |
| VA | Vermiculite Association |
| WCLA | West Coast Lumberman's Association |
| WCLIB | West Coast Lumber Inspection Bureau |
| WPA | Western Pine Association |
| WPOA | Western Plumbing Officials Association |
| WRC | Welding Research Council |
| WSCPA | Western States Clay Products Association |
| WWPA | Western Wood Products Association |

B. Abbreviations used in Specifications:

| | |
|---|---|
| a | year or years (metric unit) |
| A | ampere or amperes |
| am | ante meridian (before noon) |
| ac | alternating current |
| ac-ft | acre-foot or acre-feet |
| atm | atmosphere |
| AWG | American Wire Gauge |
| bbl | barrel or barrels |
| bd | board |
| bhp | brake horsepower |
| bil gal | billion gallons |
| BOD | biochemical oxygen demand |
| Btu | British thermal unit or units |
| Btuh | British thermal units per hour |

| | |
|---|---|
| bu | bushel or bushels |
| | |
| C | degrees Celsius |
| cal | calorie or calories |
| cap | capita |
| cd | candela or candelas |
| cfm | cubic feet per minute |
| Ci | curie or curies |
| cm | centimeter or centimeters |
| cmu | concrete masonry unit |
| CO | carbon monoxide |
| Co. | Company |
| $CO_2$ | carbon dioxide |
| COD | chemical oxygen demand |
| Corp. | Corporation |
| counts/min | counts per minute |
| cu | cubic |
| cu cm | cubic centimeter or centimeters |
| cu ft | cubic foot or feet |
| cu ft/day | cubic feet per day |
| cu ft/hr | cubic feet per hour |
| cu ft/min | cubic feet per minute |
| cu ft/sec | cubic feet per second |
| cu in | cubic inch or inches |
| cu m | cubic meter or meters |
| cu yd | cubic yard or yards |
| | |
| d | day (metric units) |
| day | day (English units) |
| db | decibels |
| DB | dry bulb (temperature) |
| dc | direct current |
| diam | diameter |
| DO | dissolved oxygen |
| DS | dissolved solids |
| | |
| emf | electromotive force |
| | |
| fpm | feet per minute |
| F | degrees Fahrenheit |
| ft | feet or foot |
| fc | foot-candle or foot candles |
| ft/day | feet per day |
| ft/hr | feet per hour |
| ft/min | feet per minute |
| ft/sec | feet per second |
| | |
| g | gram or grams |
| G | gravitational force |
| gal | gallon or gallons |
| gal/day | gallons per day |
| gal/min | gallons per minutes |
| gal/sec | gallons per second |

| | |
|---|---|
| g/L | grams per liter |
| gpd | gallons per day |
| gpd/ac | gallons per day per acre |
| gpd/cap | gallons per day per capita |
| gpd/sq ft | gallons per day per square foot |
| gph | gallons per hour |
| gpm | gallons per minute |
| gps | gallons per second |
| | |
| h | hour or hours (metric units) |
| ha | hectare or hectares |
| hp | high point |
| hp | horsepower |
| hp-hr | horsepower-hour or horsepower-hours |
| hr | hour or hours (English units) |
| Hz | hertz |
| | |
| ID | inside diameter |
| ihp | indicated horsepower |
| Inc. | Incorporated |
| inch | inch |
| inches | inches |
| inches/sec | inches per second |
| | |
| J | joule or joules |
| JTU | Jackson turbidity unit or units |
| | |
| k | kips |
| K | kelvin |
| K | thermal conductivity |
| kcal | kilocalorie or kilocalories |
| kcmil | thousand circular mils |
| kg | kilogram or kilograms |
| km | kilometer or kilometers |
| kN | kilonewton or kilonewtons |
| kPa | kilopascal or kilopascals |
| ksi | kips per square inch |
| kV | kilovolt or kilovolts |
| kVA | kilovolt-ampere or kilovolt-amperes |
| kW | kilowatt or kilowatts |
| kWh | kilowatt hour |
| | |
| L | liter or liters |
| lb/1000 cu ft | pounds per thousand cubic foot |
| lb/acre-ft | pounds per acre-foot |
| lb/ac | pounds per acre |
| lb/cu ft | pounds per cubic foot |
| lb/day/cu ft | pounds per day per cubic foot |
| lb/day/acre | pounds per day per acre |
| lb/sq ft | pounds per square foot |
| lin | linear, lineal |
| lin ft | linear foot or feet |
| lm | lumen or lumens |

| | |
|---|---|
| log | logarithm (common) |
| ln | logarithm (natural) |
| lx | lux |
| | |
| m | meter or meters |
| M | molar (concentration) |
| mA | milliampere or milliamperes |
| max | maximum |
| mCi | millicurie or millicuries |
| meq | milliequivalent |
| □F | microfarad or microfarads |
| MFBM | thousand feet board measure |
| mfr | manufacturer |
| mg | milligram or milligrams |
| mgd/ac | million gallons per day per acre |
| mgd | million gallons per day |
| mg/L | milligrams per liter |
| □g/L | micrograms per liter |
| □m | micrometer or micrometers |
| mile | mile |
| mil. gal | million gallons |
| miles | miles |
| min | minimum |
| min | minute or minutes |
| MLSS | mixed liquor suspended solids |
| MLVSS | mixed liquor volatile suspended solids |
| mm | millimeter or millimeters |
| mol wt | molecular weight |
| mol | mole |
| Mpa | megapascal or megapascals |
| mph | miles per hour |
| MPN | most probable number |
| mR | milliroentgen or milliroentgens |
| Mrad | megarad or megarads |
| mV | millivolt or millivolts |
| MW | megawatt or megawatts |
| | |
| N | newton or newtons |
| N | normal (concentration) |
| No. | number |
| Nos | numbers |
| NRC | noise reduction coefficient |
| | |
| oc | on center |
| OD | outside diameter |
| ORP | oxidation-reduction potential |
| OT | ortho-tolidine |
| OTA | ortha-tolidine-arsenite |
| oz | ounce or ounces |
| oz/sq ft | ounces per square foot |
| | |
| Pa | pascal or pascals |
| pl | plate or property line |

| | |
|---|---|
| pm | post meridiem (afternoon) |
| ppb | parts per billion |
| ppm | parts per million |
| ppt | parts per thousand |
| pr | pair |
| psf/hr | pounds per square foot per hour |
| psf | pounds per square foot |
| psi | pounds per square inch |
| psia | pounds per square inch absolute |
| psig | pounds per square inch gauge |
| PVC | polyvinyl chloride |
| | |
| qt | quart or quarts |
| | |
| R | radius |
| R | roentgen or roentgens |
| rad | radiation absorbed dose |
| RH | relative humidity |
| rpm | revolutions per minute |
| rps | revolutions per second |
| | |
| s | second (metric units) |
| S | Siemens (mho) |
| SDI | sludge density index |
| sec | second (English units) |
| SI | International System of Units |
| sp | static pressure |
| sp gr | specific gravity |
| sp ht | specific heat |
| sq | square |
| $cm^2$ or sq cm | square centimeter or centimeters |
| sq ft | square feet or foot |
| sq inch | square inch |
| sq inches | square inches |
| $km^2$ or sq km | square kilometer or kilometers |
| $m^2$ or sq m | square meter or meters |
| $mm^2$ or sq mm | square millimeter or millimeters |
| sq yd | square yard or yards |
| SS | suspended solids |
| STC | Sound Transmission Class |
| SVI | sludge volume index |
| | |
| TDS | total dissolved solids |
| TKN | total Kjeldahl nitrogen |
| TLM | median tolerance limit |
| TOC | total organic carbon |
| TOD | total oxygen demand |
| TOW | top of weir |
| TS | total solids |
| TSS | total suspended solids |
| TVS | total volatile solids |
| | |
| U | U Factor/U Value |

| | |
|---|---|
| U | Coefficient of Heat Transfer |
| U | heat transfer coefficient |
| UNS | Uniform Numbering System |
| US | United States |
| | |
| V | volt or volts |
| VA | volt-ampere or volt-amperes |
| | |
| W | watt or watts |
| WB | wet bulb |
| wg | water gauge |
| wk | week or weeks |
| wt | weight |
| | |
| yd | yard or yards |
| yr | year or years (English unit) |

C. Abbreviations used on Drawings: As listed on Drawings or in Specifications.

## PART 2 PRODUCTS

Not Used.

## PART 3 EXECUTION

Not Used.

END OF SECTION

# SECTION 01450

# QUALITY CONTROL AND INSPECTION

## PART 1 GENERAL

### 1.01 SECTION INCLUDES

A. Requirements for quality control, inspection and testing of the Work.

### 1.02 REFERENCED SECTION

A. The following Section is referenced in this Section:
   1. Section 01455 – Special Tests and Inspections.
   2. Section 01460 – Contractor Quality Control Plan.

### 1.03 CONTRACTOR'S QUALITY CONTROL

A. General:
   1. Ensure that products, services, workmanship and Site conditions comply with the requirements of the Contract Documents by coordinating, supervising, testing and inspecting its Work.
   2. Utilize only suitably qualified, skilled and trained personnel experienced in the tasks required to complete the Work in accordance with the quality requirements of the Contract Documents.
   3. Should there be no quality basis specifically prescribed for any portion of the Work, the quality and testing procedures shall be in accordance with the best-accepted practices of the construction industry for the locale of the Project, for projects of this type, or standards set by engineering or technical societies (e.g. ASTM or ASHRAE), whichever is more stringent.

B. Quality of Work:
   1. Quality of Products: Unless otherwise indicated or specified, all products shall be new, free of defects, and fit for the intended use.
   2. Quality of installation: All Work shall be produced plumb, level, square and true, or true to indicated angle, and with proper alignment and relationship between the various elements, as shown on or required by Contract Documents.
   3. Protection of Completed Work: Take all measures necessary to preserve completed Work free from damage, deterioration, soiling, and staining, until acceptance by District.
   4. Standards and Code Compliance and Manufacturer's Instructions and Recommendations: Unless more stringent requirements are indicated or specified, comply with manufacturer's instructions and recommendations, reference standards and building code research report requirements in preparing, fabricating, erecting, installing, applying, connecting, and finishing Work.

5. Deviations from Standards and Code Compliance and Manufacturer's instructions and Recommendations: Secure District's advanced written consent. Document and explain all deviations from reference standards and building code research report requirements and manufacturer's product installation instructions and recommendations, including acknowledgement by the manufacturer that such deviations are acceptable and appropriate for the Project.
6. Verification of Quality: Work shall be subject to verification of quality by District in accordance with provisions of the Contract Documents.

C. Defective Work:
1. Defective Work shall be modified, replaced, repaired or redone by the Contractor at no change in Contract Sum or Contract Time.
2. Acceptance of Defective Work, without specific written acknowledgement and approval of City, shall not relieve the Contractor of the obligation to correct such Work.
3. Should District determine that it is not feasible or in District's interest to require Defective Work to be repaired or replaced, an equitable reduction in Contract Sum shall be made by agreement between District and Contractor. If equitable amount cannot be agreed upon, a Construction Change Directive will be issued and the amount in dispute resolved in accordance with the Contract Documents.
4. District and District's consultants disclaim any and all responsibility for Work produced not in conformance with the Drawings and Specifications. Contractor shall have full responsibility for all extra inspection, correction and re-work costs by Contractor and District resulting from Defective Work, as well as all delay damages in accordance with the liquidated damages provisions of the Contract Documents. Contractor waives excuses for defective work relating to District's prior review of Submittals and/or prior failure to notice Defective Work in place on inspection.

## 1.04 INSPECTION AND TESTING

A. General:
1. Additional Requirements for tests are described in Section 01455, and other Technical Specifications (Division 02-16) of these Contract Documents.
2. Construction Manager:
   a. Where the Contract Documents require work to be field tested or approved, it shall be tested in the presence of the Construction Manager or its authorized representative.
   b. The Construction Manager shall have the right to witness all on-site tests performed by the Contractor and any shop tests. The results of any tests performed by the Contractor shall be made available for the information of the Construction Manager.
   c. Inspections, tests or favorable reviews by the Construction Manager or others shall not relieve the Contractor from its obligation to perform the work in accordance with the requirements of the Contract Documents or for its sole responsibility for the quality of workmanship and materials.

3. Testing and Sampling:
    a. Except as specifically required under the technical specifications for testing and inspection, all tests for materials furnished by the Contractor will be done in accordance with commonly recognized standards of national organizations.
    b. Where tests are to be performed by the Construction Manager or by an independent laboratory or agency, the Contractor shall furnish such samples of all materials as required by the Construction Manager without charge.
    c. The sample or samples of materials to be tested shall be selected by such laboratory or agency, or the Construction Manager, and not by the Contractor.
    d. No material for which the Contract Documents require the submittal and approval of tests, certificates of compliance or other documentation shall be incorporated in the Work until such submittal has been made and approved.
    e. Provide safe access, including plants where materials or equipment are manufactured or fabricated, for the Construction Manager and inspectors to adequately inspect the quality of work and the conformance with the Contract Documents.
    f. Furnish the Construction Manager the necessary labor and facilities for such things as excavation in the compacted fill to the depths required to take samples.
    g. Provide adequate lighting, ventilation, ladders and other protective facilities as may be necessary for the safe performance of inspections.
4. Final Inspection:
    a. Upon completion of the Work the Construction Manager will conduct a final inspection as provided for in General Conditions. Records shall be available at all reasonable hours for inspection by other local or State agencies to ascertain compliance with laws and regulations.
5. Contractor's Responsibility:
    a. Neither the employment of independent testing and inspection agency nor observations or tests by District and District's consultants shall in any manner relieve the Contractor of obligation to perform Work in full conformance to all requirements of the Contract Documents.
    b. The District reserves the right to reject all Work not in conformance to the requirements of the Contract Documents, or otherwise Defective.

B. Notice:
1. Notify the Construction Manager, in writing, at least twenty-four (24) hours before any field testing or special inspections are required to be performed by the Construction Manager or independent laboratory furnished by the District. The Contractor shall notify the Construction Manager at least two hours before any inspection is required to be performed or to witness the Contractor's on-site field testing.
2. Whenever the Contractor varies the period during which work is carried on each day, the Contractor shall give due notice to the Construction Manager so that proper inspection may be provided. Any work done in the absence of the Construction Manager shall be considered to be rejected. It will be the responsibility of the Contractor to demonstrate to the satisfaction the Construction Manager that the work meets all conditions of the specification and if such conditions are not met to remove the work.

3. Notify the Construction Manager, in writing, at least thirty (30) days prior to the shipment of materials and equipment to be tested and/or inspected at the point of origin. Satisfactory tests and inspections at the point of origin shall not be construed as a final acceptance of the materials and equipment nor shall such tests and inspections preclude retesting or re-inspection at the site of the Work.

C. Costs of Testing:
   1. The Contractor shall be responsible for, and shall pay for, all quality control and off-site tests of materials required including all source and mix design tests for the approval of soil and concrete materials except those tests specifically noted to be performed and paid for by the District.
   2. The District or Construction Manager, will perform the soils and concrete confirmation tests detailed in the Technical Specifications during the performance of the Work.
   3. All other testing required by the technical specifications shall be the responsibility of the Contractor.
   4. Additional Tests and Inspections:
      a. The Construction Manager shall have the authority to require additional tests or inspections due to the manner in which the Contractor executes its work.
      b. Examples of such additional tests and inspections include; tests of materials substituted for previously accepted materials, or substituted for specified materials, or retests made necessary by failure of material to comply with the requirements of the Specifications.
      c. Where such tests and inspections are required by Contract to be performed by the District, the District will pay for the additional tests and inspections but will issue a unilateral Change Order to deduct these costs from the Contract price.

D. Work Covered Prior to Inspection and/or Testing:
   1. Work requiring inspection and/or testing shall not be concealed or buried prior to the acceptance of such inspection or testing.
   2. Work covered without the favorable review or consent of the Construction Manager shall, if required by the Construction Manager, be uncovered for inspection and/or testing at the Contractor's expense.

E. Work Covered With Prior Inspection and/or Testing:
   1. If the Construction Manager considers it necessary or advisable that covered work which was favorably inspected and tested be uncovered for re-inspection and/or retesting, the Contractor, at the Construction Manager's request, will uncover, expose or otherwise make available for observation, inspection or testing as the Construction Manager may require, that portion of the work in question, furnishing all necessary labor, materials, tools, and equipment.
   2. If it is found that such work is defective, the Contractor will bear all expenses of such uncovering, exposure, observation, inspection and testing and of satisfactory reconstruction.
   3. If, however, such work is not found to be defective the Contractor will be allowed an increase in the Contract price or an extension of the Contract time, or both, directly attributable to such uncovering, exposure, observation, testing and reconstruction, and a Change Order shall be issued for such additional work.

F. Coordination of County, City Building and Other Inspections:
   1. The Contractor is completely responsible for scheduling all County, City and any other agency inspections in accordance with the County, City and agency requirements.
   2. Notify the Construction Manager of all building and other work component inspection notices and schedules.
   3. Failure of the Contractor to properly coordinate and schedule these inspections shall not be cause for time extensions.

G. Special Tests and Inspections:
   1. As provided for in the Contract Documents and laws and regulations, specialized tests and inspections shall be performed by special inspectors certified by the International Conference of Building Officials (ICBO).
   2. Unless otherwise stated in the Contract Documents, each of these tests will be performed and paid for by the District.

H. Inspections and Tests by Serving Utilities:
   1. Unless otherwise indicated in the Contract Documents, the Contractor shall cause, schedule and conduct inspections and tests by serving Utilities required for the Work under this Contract.

I. Inspections and Tests by Serving Manufacturers:
   1. Unless otherwise indicated in the Contract Documents, the Contractor shall cause all required tests and inspections to be conducted by materials, equipment or systems manufacturers.
   2. Additionally, all tests and inspections required by materials, equipment or systems manufacturers as conditions of warranty or certification of Work shall be made, the cost of which shall be included in the Contractor's bid.

## 1.05 WATER FOR TESTING

A. Contractor may use water from the Owner's water system only related to the WORK to be performed by the Contractor. The Contractor shall provide temporary connections, piping and valving to the Owner's water system at Contractor's expense. The Contractor shall not make connection to any water system without first obtaining permission from the Owner. Contractor may not use District hose bibs unless coordinated and approved in advance. Contractor will be responsible to reimburse the District for any water use.

B. The Contractor shall submit a written request of water needs for testing including a description, volume, location and duration of use to the Construction Manager for approval:
   1. The Construction Manager will designate the type of water, locations where connections may be made and the backflow protection, if required.
   2. The Contractor is responsible for providing, installing and testing the backflow prevention device at the Contractor's expense.
   3. The Construction Manager may also require a meter on the connection depending on the volume of water requested.

**END OF SECTION**

# SECTION 01455

# SPECIAL TESTS AND INSPECTIONS

## PART 1 GENERAL

### 1.01 SUMMARY

A. Section includes: This Section describes the requirements for providing special tests and inspections.

B. Related sections:
   1. Section 01450 - Quality Control and Inspection.

### 1.02 REFERENCES

A. ASTM International (ASTM):
   1. C140 - Standard Test Methods for Sampling and Testing Concrete Masonry Units and Related Units.
   2. C270 - Standard Specification for Mortar for Unit Masonry.
   3. C780 - Standard Test Method for Preconstruction and Construction Evaluation of Mortars for Plain and Reinforced Unit Masonry.
   4. C1019 - Standard Test Method for Sampling and Testing Grout.
   5. C1314 - Standard Test Method for Compressive Strength of Masonry Prisms.

B. California Building Code (CBC).

### 1.03 DESCRIPTION

A. This Section describes special tests and inspections of structural assemblies and components to be performed in compliance with CBC.

B. These special tests and inspections are in addition to the requirements specified in Section 01450 – Quality Control and Inspection, and by the individual sections.

C. The Owner will employ 1 or more inspectors who will provide special inspections during construction on an as needed basis. Contractor shall provide adequate advanced notification for all inspections.

### 1.04 INSPECTION

A. Duties of Special Inspector:
   1. General: Required duties of the Special Inspector are described in CBC.

### 1.05 TESTS

A. Selection of the material required to be tested shall be by the Owner's Testing Laboratory and not the Contractor.

## 1.06 SPECIAL TESTING AND INSPECTIONS

A. Testing laboratory: Special tests will be performed by the Owner's testing laboratory as specified in Section 01450.

B. Owner reserves the right to positive material identification tests:
   1. Contractor must make materials available for testing.

C. The following types of work require special inspection as described in CBC, Refer to the following verification, testing and inspection schedules.
   1. Appendix A, Cast-In-Place Concrete Special Inspection Schedule.
   2. Appendix B, Essential Architectural, Mechanical And Electrical Inspection Schedule.
   3. Appendix D, Soils Verification And Inspection Schedule.
   4. Appendix E, Structural Steel Special Inspection Schedule.

# PART 2 PRODUCTS

Not Used.

# PART 3 EXECUTION

## 3.01 SCHEDULE

A. The Contractor shall allow time necessary for Special Inspections as listed above.

B. Sufficient notice shall be given so that the Special Inspections can be performed. This includes time for off-site Special Inspectors to plan the inspection and travel to site.

## 3.02 PROCEDURE

A. The Special Inspector will immediately notify the Engineer of any corrections required and follow notification with appropriate documentation.

B. The Contractor shall not proceed until the work is satisfactory to the Engineer.

END OF SECTION

## APPENDIX A
## CAST-IN-PLACE CONCRETE SPECIAL INSPECTION SCHEDULE

| Verification and Inspection | Reference Standard | Frequency of Inspection | |
|---|---|---|---|
| | | Continuous During Task Listed | Periodic During Task Listed |
| 1. Inspection of reinforcing steel, including prestressing tendons, and placement. | | – | X |
| 2. Inspection of reinforcing steel welding. | IBC Table 1704.3, Item 5B | – | – |
| 3. Inspect bolts to be installed in concrete prior to and during placement of concrete. | | X | – |
| 4. Verifying use of required design mix. | | – | X |
| 5. At the time fresh concrete is sampled to fabricate specimens for strength tests, perform slump and air content tests, and determine the temperature of the concrete. | | X | – |
| 6. Inspection of concrete and shotcrete placement for proper application techniques. | | X | – |
| 7. Inspection for maintenance of specified curing temperature and techniques. | | – | X |

**APPENDIX B**
**ESSENTIAL ARCHITECTURAL, MECHANICAL AND ELECTRICAL INSPECTION SCHEDULE**

| Verification and Inspection | Reference Standard | Frequency of Inspection | |
|---|---|---|---|
| | | Continuous During Task Listed | Periodic During Task Listed |
| | | | |
| 2. Anchorage of electrical equipment for emergency standby power. | | – | X |
| 3. Anchorage of other electrical or mechanical equipment over 1,000 lb. on floors or roofs. | | – | X |
| 4. Anchorage of ducts greater than 6 s.f. in cross-section. | | – | X |
| 5. Anchorage of pipelines greater than 8 inches in diameter. | | – | X |
| 6. Steel storage racks supporting pipelines. | | – | X |
| | | | |
| | | | |

**APPENDIX D**
**SOILS VERIFICATION AND INSPECTION SCHEDULE**

| Verification and Inspection | Reference Standard | Frequency of Inspection | |
|---|---|---|---|
| | | Continuous During Task Listed | Periodic During Task Listed |
| 1. Verify materials below footings are adequate to achieve the design bearing capacity. | | – | X |
| 2. Verify excavations are extended to proper depth and have reached proper material. | | – | X |
| 3. Perform classification and testing of controlled fill materials. | | – | X |
| 4. Verify use of proper materials, densities, and lift thicknesses during placement and compaction of controlled fill. | | X | – |
| 5. Prior to placement of controlled fill, observe subgrade and verify that site has been prepared properly. | | – | X |

**APPENDIX E**
**STRUCTURAL STEEL SPECIAL INSPECTION SCHEDULE**

| Verification and Inspection | Reference Standard | Frequency of Inspection | |
|---|---|---|---|
| | | Continuous During Task Listed | Periodic During Task Listed |
| 1. Material verification of high-strength bolts, nuts and washers: | | | |
| a. Identification markings to conform to ASTM standards specified in the approved construction documents. | | – | X |
| b. Manufacturer's certificate of compliance required. | | – | X |
| 2. Inspection of high-strength bolting: | | | |
| a. Bearing-type connections. | | – | X |
| b. Slip-critical connections. | | X | X |
| 3. Material verification of structural steel: | | | |
| a. Identification markings to conform to ASTM standards specified in the approved construction documents. | | – | X |
| b. Manufacturers' certified mill test reports. | | X | – |
| 4. Material verification of weld filler materials: | | | |
| a. Identification markings to conform to AWS specification in the approved construction documents. | | – | X |
| b. Manufacturer's certificate of compliance required. | | – | X |
| 5. Inspection of welding: | | | |
| a. Structural steel: | | – | – |
| 1) Complete and partial penetration groove welds. | | X | – |
| 2) Multi-pass fillet welds. | | X | – |
| 3) Single-pass fillet welds > 5/16". | | X | – |
| 4) Single-pass fillet welds ≤ 5/16". | | – | X |
| 5) Floor and deck welds. | | – | X |
| b. Reinforcing steel: | | – | – |
| 1) Verification of weldability of reinforcing steel other than ASTM A706. | | – | X |
| 2) Reinforcing steel-resisting flexural and axial forces in boundary elements of special reinforced concrete shear walls and shear reinforcement. | | X | – |
| 3) Shear reinforcement. | | X | – |
| 4) "Form Saver" (reinforcing couplers). | | X | – |

| | | | |
|---|---|---|---|
| 6. Inspection of steel frame joint details for compliance with approved construction documents: | | | X |
| a. Details such as bracing and stiffening. | | X | – |
| b. Member locations. | | X | – |
| c. Application of joint details at each connection. | | X | |
| 7. Seismic force resisting systems identified on structural plans. | | X | – |
| 8. Stainless Steel handling procedures to avoid contamination. | | X | – |

# SECTION 01460

# CONTRACTOR QUALITY CONTROL PLAN

## PART 1 GENERAL

### 1.01 SUMMARY

A. Section includes:
   1. Contractor Quality Control Plan.

### 1.02 SUBMITTALS

A. Qualifications of the Contractor's Quality Control (CQC) Plan Manager must include all qualifying registrations and show that the candidate has had experience (minimum 5 years) on projects of similar type and size.

B. Contractor's Daily Quality Control Report: Submit to Engineer within 1 day of completion of each inspection.

C. Daily Inspection Report: Submit to Engineer at the end of each working day or no later than prior to the beginning of the next working day.

### 1.03 CONTRACTOR'S INSPECTION OF THE WORK

A. Work performed by Contractor shall be inspected by the Contractor's CQC Plan Manager. Non-conforming Work and any safety hazards in the Work area shall be noted and promptly corrected.

B. No materials or equipment shall be used in Work without inspection and acceptance by Contractor's CQC Plan Manager.

### 1.04 QUALIFICATIONS

A. Contractor's CQC Plan Manager: Demonstrate having performed similar CQC functions on similar type projects. Submit records of personnel experience, training, and qualifications.

### 1.05 COVERING WORK

A. Whenever Contractor intends to backfill, bury, cast in concrete, or otherwise cover any Work, notify Engineer not less than 24 hours in advance to request inspection before beginning any such Work of covering. Failure of Contractor to notify Engineer in accordance with this requirement shall be resolved according to Article 14 of the General Conditions.

### 1.06 REJECTED WORK

A. Failure to promptly remove and replace rejected Work will be considered a breach of this Contract, and Owner may proceed under provisions of the General Conditions.

## 1.07 CONTRACTOR'S QUALITY CONTROL PROGRAM

A. General: Establish and execute a Quality Control (CQC) Plan for Work. The plan shall establish adequate measures for verification and conformance to defined requirements by Contractor personnel and lower-tier Subcontractors (including Fabricators, Suppliers, and Subcontractors). This program shall be described in a Plan responsive to this Section.

B. CQC personnel:
   1. Contractor's CQC Plan Manager shall report to a Senior Project Manager of the Contractor and shall have no supervisory or managerial responsibility over the workforce.
   2. The Contractor CQC Plan Manager shall be on-site as often as necessary, but not less than the daily working hours specified in the Contract Documents to remedy and demonstrate that Work is being performed properly and to make multiple observations of Work in progress.
   3. The Contractor is to furnish personnel with assigned CQC functions reporting to the CQC Manager. Persons performing CQC functions shall have sufficient qualifications, authority, and organizational freedom to identify quality problems and to initiate and recommend solutions.

C. CQC Plan:
   1. Contractor's CQC Plan shall include a statement by the Senior Project Manager designating the CQC Plan Manager and specifying the authority delegated to the CQC Plan Manager to direct cessation or removal and replacement of defective Work.
   2. Describe the CQC program and include procedures, work instructions, and records. Describe methods relating to areas that require special testing and procedures as required by the specifications.
   3. Include specific instructions defining procedures for observing Work in process and comparing this Work with the Contract requirements (organized by specifications section).
   4. Describe procedures to ensure that equipment or materials that have been accepted at the Site are properly stored, identified, installed and tested.
   5. Include procedures to verify that procured products and services conform to the requirements of the Specifications. Requirements of these procedures shall be applied, as appropriate, to lower-tier Suppliers and/or Subcontractors.
   6. Startup and testing quality control: Include procedures to verify that the startup and testing requirements of the Contract Documents are integrated into the Contractor's CQC Plan and conform to the requirements of the Specifications. Requirements of these procedures shall be applied, as appropriate, to the Contractor and the lower-tier Suppliers and/or Subcontractors.
   7. Include instructions for recording inspections and requirements for demonstrating through the Daily Inspection Reports that Work inspected was in compliance or a deficiency was noted and action to be taken.
   8. Procedures to preclude the covering of deficient or rejected Work.
   9. Procedures for halting or rejecting Work.
   10. Procedures for resolution of differences between the CQC Plan Manager and the production personnel.
   11. Identify contractual hold/inspection points as well as any Contractor-imposed hold/inspection points.

D. Daily Inspection Report: Include, at a minimum:
   1. Inspection of specific work.
   2. Quality characteristics in compliance.
   3. Quality characteristics not in compliance.
   4. Corrective/remedial actions taken.
   5. Statement of certification.
   6. CQC Manager's signature.
   7. Information provided on the daily report shall not constitute notice of delay or any other notice required by the Contract Documents.

E. Deficient and Non-conforming Work and Corrective Action: Include procedures for handling deficiencies and non-conforming Work. Deficiencies and non-conforming Work are defined as documentation, drawings, material, equipment, or Work not conforming to the indicated requirements or procedures. The procedure shall prevent non-conformances by identification, documentation, evaluation, separation, disposition, and corrective action to prevent reoccurrence. Conditions having adverse effects on quality shall be promptly identified and reported to the senior level management. The cause of conditions adverse to quality shall be determined and documents and measures implemented to prevent recurrence. In addition, at a minimum, this procedure shall address:
   1. Personnel responsible for identifying deficient and non-complying items within Work.
   2. How and by whom deficient and non-compliant items are documented "in the field."
   3. The personnel and process utilized for logging deficient and non-compliant Work at the end of each day onto a deficiency log.
   4. Tracking processes and tracking documentation for deficient and non-conforming Work.
   5. Personnel responsible for achieving resolution of outstanding deficiencies.
   6. Include detailed procedures for the performance and control of special process (e.g., welding, soldering, heat treating, cleaning, plating, nondestructive examination, etc.).

F. Audits: The CQC program shall provide for regularly scheduled documented audits to verify that CQC procedures are being fully implemented by Contractor and its Subcontractors. Audit records shall be made available to Engineer upon request.

G. Documented control/quality records:
   1. Establish methods for control of Contract Documents that describe how Drawings and Specifications are received and distributed to assure the correct issue of the document being used. Describe how record document/drawing data are documented and furnished to Engineer.
   2. Maintain evidence of activities affecting quality. Including operating logs, records of inspection, audit reports, personnel qualification and certification records, procedures, and document review records.
   3. Maintain quality records in a manner that provides for timely retrieval and traceability. Protect quality records from deterioration, damage and destruction.
   4. Develop a list of specific records as required by the Contract Documents that will be furnished to Engineer at the completion of activities.

H. Acceptance of CQC Plan: Engineer's acceptance of the CQC Plan shall not relieve Contractor from any of its obligations for performance of Work. Contractor's CQC staffing is subject to Engineer's review and continued acceptance. Owner, at its sole option, and without cause, may direct Contractor to remove and replace the CQC Plan Manager:
   1. Acceptance of the CQC Plan by the Engineer is required prior to the start of construction. Acceptance is conditional and will be predicated on satisfactory performance during the construction.
   2. After acceptance of the CQC Plan, notify the Engineer in writing of any proposed change. Proposed changes are subject to acceptance by the Engineer.

## PART 2 PRODUCTS

Not Used.

## PART 3 EXECUTION

Not Used.

END OF SECTION

# SECTION 01500

# CONSTRUCTION FACILITIES AND TEMPORARY CONTROLS

## PART 1 GENERAL

### 1.01 SUBMITTALS

A. Meet requirements of Section 01330, SUBMITTAL PROCEDURES, as applicable. Make Submittals required below before starting Work at the site or in accordance with accepted schedule of Submittals submissions.

B. Administrative Submittals: Copies of permits and approvals for construction as required by Laws and Regulations and governing agencies.

### 1.02 MOBILIZATION

A. Reference the General Conditions.

B. Mobilization shall include, but not be limited to, these principal items:
   1. Obtaining required permits.
   2. Moving Contractor's plant and equipment required for first month operations onto site.
   3. Installing temporary construction power, wiring, and lighting facilities.
   4. Providing onsite communication facilities, including telephones.
   5. Providing onsite sanitary facilities and potable water facilities as specified and as required by Laws and Regulations, and governing agencies.
   6. Arranging for and erection of Contractor's work and storage yard.
   7. Posting OSHA required notices and establishing safety programs and procedures.
   8. Having Contractor's superintendent at the site full time.
   9. Submitting of initially acceptable schedules as required in the General Conditions.

C. Payment for Mobilization. The Contractor's attention is directed to the condition that no payment for mobilization, or any part thereof will be approved for payment under the contract until all applicable mobilization items listed above have been completed.

### 1.03 CONTRACTOR ACCESS, STAGING/LAYDOWN AREA, USE OF PREMISES

A. Lands furnished by District upon which Contractor shall perform the Work are as shown on the Drawings. Unless otherwise provided, specific location(s) and available area(s) for Contractor’s staging/laydown, and site access, shall be the Contractor's responsibility to obtain. Staging fees are the responsibility of the Contractor. All staging must be obtained by the Contractor and pre-approved by the District or City of Sausalito as applicable prior to mobilizing. Limited remote staging may be available on an as-needed/short term basis by the District.

B. Contractor's employees shall not use District's facilities including, but not limited to, buildings, restrooms/showers, or landscaped areas for break or lunch times. Contractor's employees shall be responsible for cleaning up any litter from break or lunch times.

## 1.04 PERMITS

A. Permits, Licenses, or Approvals: Obtain in accordance with Paragraph 6.06 of the General Conditions.

## 1.05 PROTECTION OF WORK AND PROPERTY

A. Not used.

B. Comply with the City of Sausalito and District's safety rules.

C. Keep District informed of serious accidents on the site and related claims.

D. Use of Explosives: No blasting or use of explosives will be allowed on the site.

E. During the performance of the Work, Contractor is responsible for adapting its means, methods, techniques, sequences, and procedures of construction to allow District to maintain operation as described in Section 01140, WORK RESTRICTIONS, at the existing level of facility production and consistent with applicable permit requirements, and Laws and Regulations. In performing such Work and in cooperating with District to maintain operations, it may be necessary for Contractor to plan, design, and provide various temporary services, utilities, connections, temporary piping and heating, access, and similar items that will be included within the Contract Price.

# PART 2 PRODUCTS

## 2.01 CONTRACTOR FIELD OFFICE

A. It is optional that the Contractor install a project field office at the WORK site. It is the Contractor's responsibility to obtain and to pay for all temporary utilities including water, sanitary connection, telephone and electric power services for its field office. In addition, the Contractor is responsible for obtaining approved staging within the City of Sausalito or in remote locations.

## PART 3 EXECUTION

### 3.01 DISTRICT'S FIELD OFFICE. NOT REQUIRED

### 3.02 TEMPORARY UTILITIES

A. Power:
   1. Contractor may not use District outlets unless coordinated and approved in advance. Contractor will be responsible to reimburse the District for any power use.
   2. Electrical appurtenances required for providing temporary electric power services for the Contractor shall be provided by the Contractor and approved by the District.
   3. If the Contractor damages any of the District's electrical components, the Contractor shall be responsible for repairing the damage to the satisfaction of the District.
   4. If PG&E power is not available, the Contractor shall provide its own diesel or gasoline engine driven generator to provide power to all construction tools, bypass pumps, and other devices needed to complete the work. Generators must comply with City of Sausalito sound ordinances for the location and time of use.

B. Lighting: Provide temporary lighting at least to meet all applicable safety requirements to allow erection, application or installation of materials and equipment, and observation or inspection of the Work. Cost of temporary lighting required for performing the Work will be borne by the Contractor.

C. Heating, Cooling, and Ventilating:
   1. Provide as required to maintain adequate environmental conditions to facilitate progress of the Work, to meet specified minimum conditions for the installation of materials, and to protect materials, equipment, and finishes from damage due to temperature or humidity.
   2. Provide adequate forced air ventilation of enclosed areas to cure installed materials, to dispense humidity, and to prevent hazardous accumulations of dust, fumes, vapors, or gases.
   3. Pay all costs of installation, maintenance, operation, removal, and fuel consumed.
   4. Provide portable unit heaters, complete with controls, oil- or gas-fired, and suitably vented to outside as required for protection of health and property.
   5. If permanent natural gas piping is used for temporary heating units, do not modify or reroute gas piping without approval of District. Provide separate gas metering as required by District.

D. Water:
   1. Contractor may use water from the District's water system only related to the WORK to be performed by the Contractor. The Contractor shall provide temporary connections, piping and valving to the District's water system at Contractor's expense. The Contractor shall not make connection to any water system without first obtaining permission from the District. Contractor may not use District hose bibs unless coordinated and approved in advance. Contractor will be responsible to reimburse the District for any water use.
   2. Contractor will provide temporary facilities and piping required to bring water to the point of use, and remove them when no longer needed.
   3. Contractor will provide water required for testing equipment, manholes or vaults, and piping prior to Substantial Completion, unless otherwise specifically stated in the Specifications for the equipment, systems, or facilities to be tested.
   4. Recycled water is not available at site for use. Contractor facilities, receiving and using recycled water shall be marked appropriately, i.e. "Recycled Water Do Not Drink."

E. Sanitary and Personnel Facilities:
   1. Provide and maintain facilities for Contractor's employees, Subcontractors, and all other onsite employer's employees. Service, clean, and maintain facilities and enclosures.
   2. Use of District's existing sanitary facilities by Contractor's personnel will not be allowed.

F. Communication:
   1. The Contractor shall make arrangements to obtain and pay for its own communication equipment such as telephone, cellular phone, and facsimile equipment.
   2. Arrange and provide onsite telephone service for Contractor's use during construction. Contractor to pay all costs of installation and monthly bills.
   3. No incoming telephone calls shall be allowed to District's plant telephone system.

G. Fire Protection: Furnish and maintain on the site adequate firefighting equipment capable of extinguishing incipient fires. Comply with applicable parts of the National Fire Prevention Standard for Safeguarding Building Construction Operations (NFPA No. 241).

## 3.03 PROTECTION OF WORK AND PROPERTY

A. General:
   1. Perform Work within rights-of-way and easements in a systematic manner that minimizes inconvenience to property owners and the public.
   2. No primary access road shall be cut off from vehicular traffic unless special arrangements have been made and approved by the District.
   3. Maintain in continuous service all existing pipelines, cables, storm drains, process drains, sewers, poles and overhead power, and all other utilities encountered along the line of Work, unless other satisfactory arrangements have been made.

4. Where completion of Work requires temporary or permanent removal and/or relocation of an existing utility, coordinate all activities with owner of said utility and perform all work to their satisfaction.
5. Protect, shore, brace, support, and maintain underground pipes, conduits, drains, and other underground utility construction uncovered or otherwise affected by construction operations.
6. Keep fire hydrants and water control valves free from obstruction and available for use at all times.
7. In areas where Contractor's operations are adjacent to or near pipelines, cables, storm drains, sewers, process drains, and such operations may cause damage or inconvenience, suspend operations until arrangements necessary for protection thereof have been made by Contractor.
8. Notify all affected parties other than District, which may be affected by any construction operations, five (5) days in advance. Thereafter, provide written notice at least two (2) days in advance.
9. Do not impair operation of existing sewer systems. Prevent construction material, pavement, concrete, earth, volatile and corrosive wastes, and other debris from entering sewers, pump stations, or other sewer structures. Maintain original site drainage wherever possible.

B. Site Security:
1. Security Fence: Provide and maintain additional temporary security fences as necessary to protect the Work and Contractor's equipment, stored material, etc.

C. Barricades and Lights:

1. Provide as necessary to prevent unauthorized entry to construction areas and affected roads, streets, and alleyways, inside and outside of fenced area, and as required to ensure public safety and the safety of District’s, Contractor's employees, other employer's employees, and others who may be affected by the Work.
2. Provide to protect existing facilities and adjacent properties from potential damage.
3. Locate to enable access by facility operators and property owners.

D. Signs and Equipment:
1. Conform to requirements of Caltrans Standard Specifications.
2. Barricades: Provide in sufficient quantity to safeguard public and Work.
3. Traffic Cones: Provide to delineate traffic lanes to guide and separate traffic movements.
4. Provide at obstructions, such as material piles and equipment.
5. Illuminate barricades and obstructions with warning lights from sunset to sunrise.
6. Use to alert general public of construction hazards, which would include surface irregularities, unramped walkways, grade changes, and trenches or excavations in roadways and in other public access areas.
7. No Parking signs shall be posted at least forty-eight (48) hours prior to start of Work in affected area. No Parking signs shall be posted on barricades and not on existing trees or poles.

E. Existing Structures: Where Contractor contemplates removal of small structures such as signposts and culverts that interfere with Contractor's operations, obtain District's prior approval. Replace those removed in a condition equal to or better than original.

F. Finished Construction: Protect finished floors and concrete floors exposed as well as those covered with composition tile or other applied surfacing.

G. Waterways: Keep ditches, culverts, existing swales, and natural drainages continuously free of construction materials and debris.

H. Dewatering: Construct, maintain, and operate channels, flume drains, sumps, pumps, or other temporary diversion and protection works. Furnish materials required, install, maintain, and operate necessary pumping and other equipment for the environmentally safe removal and disposal of water from the various parts of the Work. Maintain the foundations and parts of the Work free from water.

## 3.04 TEMPORARY CONTROLS

A. Water Pollution Control:
   1. Prior to commencing excavation and construction, obtain District's agreement with detailed plans showing procedures intended to handle and dispose of sewage, groundwater, and stormwater flow, including dewatering pump discharges.
   2. Do not dispose of volatile wastes such as mineral spirits, oil, chemicals, or paint thinner in storm drains or sanitary sewers. Disposal of wastes into streams or waterways is prohibited. Provide acceptable containers for collection and disposal of waste materials, debris, and rubbish.

B. Erosion, Sediment, Runoff, and Flood Control:
   1. Provide, maintain, and operate temporary facilities to control erosion and sediment releases, prevent runoff of recycled water, and to protect Work and existing facilities from flooding during construction period.
   2. Obtain and comply with the General NPDES Permit for Storm Water Discharges associated with Construction Activity.

## 3.05 STAGING AREA

A. Staging is the Contractor's responsibility to obtain, permit and pay for. Limited staging will be available within the treatment plant area. The Contractor's staging area (including fencing, aesthetics and housekeeping) shall be coordinated with the District.

B. Temporary Storage Area: Construct temporary storage area for storage of products that are not subject to damage by weather conditions.

C. Temporary Storage Buildings:
   1. Provide environmental control systems that meet recommendations of manufacturers of equipment and materials stored. Equipment and materials may require off-site storage due to space limitations at the project site.
   2. Arrange or partition to provide security of contents and ready access for inspection and inventory.

3. Store combustible materials (paints, solvents, fuels, etc.) in a well-ventilated and remote building meeting safety standards.

## 3.06 ACCESS ROADS AND DETOURS

A. No road detours are anticipated for the Work.

B. Maintain drainage ways.

C. Where required, or as directed by District's Representative, provide gravel, crushed rock, or other stabilization material to permit access by all motor vehicles at all times.

D. Maintain road grade and crown to eliminate potholes, rutting, and other irregularities that restrict access.

E. Where construction affects existing fences, install and maintain gates. Temporary fencing will be adequate to perform the function of the permanent fencing it will replace on s short term basis. Refer also to any permit requirements in Section 01060, Regulatory Requirements and Permits.

F. Upon completion of construction, leave roads and fences in same or better condition as prior to start of construction activities, and suitable for future use by District.

## 3.07 PARKING AREAS

A. Control vehicular parking to preclude interference with public traffic or parking, access by emergency vehicles, District's operations, or construction operations.

B. Provide parking facilities for personnel working on the Project in Contractor's staging area or in legal parking spaces. No employee or equipment parking will be permitted in the District's parking lot at the treatment plant.

## 3.08 CLEANING DURING CONSTRUCTION

A. General:
   1. In accordance with the General Conditions, as may be specified in specific Specification sections, and as required herein.
   2. Wet down exterior surfaces prior to sweeping to prevent blowing of dust and debris.
   3. Provide approved containers for collection and disposal of waste materials, debris, and rubbish. At least at weekly intervals, dispose of such waste materials, debris, and rubbish offsite.
   4. Daily, brush sweep the entry drive and roadways, and all other streets and walkways affected by Work and where adjacent to Work. Contractor shall maintain an organized worksite and clean daily. Contractor may be charged $500 per day if worksite is not cleaned and/or worksite is not in compliance with permit requirements.

## 3.09 REMOVAL OF TEMPORARY FACILITIES AND UTILITIES

A. At such time or times any temporary construction facilities and utilities are no longer required for the Work, Contractor shall notify District of his intent and schedule for removal of the temporary facilities and utilities, and obtain District's approval before removing the same. As approved, Contractor shall remove the temporary facilities and utilities from the site as his property and leave the site in such condition as specified, as directed by District, and/or as shown on the Drawings.

B. After completion of the project, all temporary utility services shall be disconnected or removed and all affected improvements shall be restored to their original condition by the Contractor at no cost to the District.

C. The condition of the site shall be left in a condition that will restore original drainage, evenly graded, seeded or planted as necessary, and left with an appearance equal to, or better than original.

END OF SECTION

# SECTION 01550

# TRAFFIC CONTROL

## PART 1 GENERAL

### 1.01 SUMMARY

A. Contractor's responsibilities regarding the Traffic Control Plan during the construction period shall include labor, material, equipment, tools, and services used in the regulation of construction traffic to and from the project site as well as public vehicular and pedestrian traffic within the project limits.

### 1.02 REFERENCES

A. United States Department of Transportation, Federal Highway Administration:
   1. Manual on Uniform Traffic Control Devices, (MUTCD).

B. California Department of Transportation, (CalTrans).

### 1.03 SUBMITTALS

A. Approved and signed copies of:
   1. Encroachment permit.
   2. Traffic control plan (TCP).
   3. Notification plan.

### 1.04 GENERAL REQUIREMENTS

A. Comply with requirements from the following Authorities Having Jurisdiction (AHJ):
   1. City of Sausalito.

B. Federal, state, and local laws and regulations as required by the AHJ supersede the requirements of this Section.

C. Contractor is responsible for costs associated with permits, plans, implementation, and maintenance.

### 1.05 ENCROACHMENT PERMIT

A. Provide Encroachment Permit.

### 1.06 TRAFFIC CONTROL PLAN (TCP)

A. Provide a TCP for each phase or segment of the construction meeting the requirements of the AHJ and this Section:
   1. Each TCP shall be considered separately.

B. Timing:
   1. Include work hours and define off peak hour work requirements.
   2. Lane closures shall not commence outside of permitted hours:

a. No work that interferes with public traffic shall be done outside of permitted hours.
b. Minor deviations from the requirements of this Section concerning hours of work may be permitted upon approval by the AHJ.
c. When work is not actively in progress the full width of the traveled way shall be open for public traffic.

C. Maintain at least one vehicle access to all properties (including emergency vehicles) at all times unless closure is approved in writing.

D. Define placement of the following:
1. Project signs.
2. Text message boards:
a. Locate fixed text message boards at each end of the project set.
b. Locate 2 moveable boards within the project setup area.

E. Define placement and spacing of traffic control devices (including signs, markings, channelizing devices, lighting devices, flaggers, etc.) and spacing/location of these within the following traffic control areas:
a. Advance warning areas.
b. Transition areas.
c. Buffer spaces.
d. Work areas.
e. Termination Areas.
f. No parking areas.
g. Fresh oil areas.
h. Advance warning signs.
i. Lane closure areas.
j. “Double penalty in work zones” warning areas.
k. Detour areas.

F. Set-up changes to accommodate different phasing of the work:
1. Define channelizing, shifting of traffic lanes, and barricading.
2. After installation of new or modified control, Contractor shall inspect and certify that controls are installed and operating as intended:
a. Certification shall consist of a signed affidavit stating that the traffic control has been inspected and found to be in conformance with the TCP and contract requirements provided to the government agency with jurisdiction of the right-of-way.

G. General signage requirements:
1. Include location, size, height, text height, and color of each sign.

H. Provide for the protection of the traveling public, pedestrians and workers within the area covered by the limits of construction, at all times when the area is affected by construction facilities or activities including the following:
1. Business access.
2. Private property access:
a. Warn, control, protect, and expedite vehicular and pedestrian traffic through the private property.
3. Driveway access.
4. Pedestrian access.
5. Bus stop access.

6. Bike access:
    a. Maintain safe bike facilities through the work zone and associated traffic control layouts.
    b. Provide alternative bike facilities or designated detour routes when necessitated by temporary removal of existing bike lanes.
    c. Trench-plates shall be recessed to be even with asphalt or concrete where bike access exists.
7. Emergency vehicle access:
    a. Maintain access for emergency vehicles at all times.
8. School zones and safe routes to school:
    a. When a designated Safe Route to School is encroached upon by a construction work zone or the AHJ identifies a need for students to be assisted in the safe crossing through the work zone, provide a qualified crossing guard approved by the AHJ:
        1) Crossing guard shall be present for the full duration of time that children are likely to be present, as determined by the AHJ.
        2) Contractor is responsible for fees associated with the use of crossing guards.
9. Excavations.
10. Work sites.
11. Intersections.

I. Define lane widths and transitions.

J. Provide 24-hour emergency contact information.

K. Administration:
    1. Submit the approved TCP to the Engineer within 48 hours of approval by the AHJ:
        a. Review and comment on the TCP by the government agency with jurisdiction of the right-of-way shall in no way relieve the Contractor of the responsibility for traffic and safety requirements.
        b. Such acceptance shall in no way be construed as confirmation of the technical accuracy or adequacy of the contents of the TCP and shall not relieve the Contractor of the obligation to institute traffic control measures in full compliance with contract requirements and in conformance with local agency requirements.
    2. Submit traffic control change certification to the Engineer within 48 hours of completing the change.

L. Changes to the TCP:
    1. If, during the execution of the work, the Contractor determines that the traffic control is not functioning as intended, the Contractor may make revisions to the TCP as necessary, provided that the local agencies with jurisdiction have accepted the changes.
    2. Emergency change requests affecting life and property can be submitted by the Contractor to the AHJ.

M. Temporary surfaces:
    1. Provide temporary surfacing of excavated areas immediately after completing the backfilling of any section of the Work:

a. If permitted by the AHJ, the Contractor may be allowed to leave excavations open provided that traffic control devices, approved by the governmental agency maintaining the right-of-way, are in place and maintained, and excavations are covered with approved temporary steel plates (non-skid surface type) at the close of each working day.
b. All temporary steel plates/trench-plates installed in roadways shall be recessed to be flush with existing asphalt. Using "cut back" around trench-plates is not acceptable. Sausalito has a high volume of bicycle traffic which requires recessed trench-plates for safety.

N. Barricades and enclosures:
1. Provide suitable barricades, lights, signs, and watchmen at places where the Work causes obstructions to the normal traffic or constitutes in any way a hazard to the workmen or the public.
2. Statutory requirements: Install and maintain barricades, signs, lights, and other protective devices within rights-of-way in strict conformity with applicable statutory requirements by the AHJ in accordance with approved Traffic Control Plan.

O. Temporary bridges:
1. Design and place suitable temporary bridges where necessary for the maintenance of vehicular and pedestrian traffic and to accommodate the use of temporary sewer bypass pipelines.

P. Pavement markings:
1. Temporary pavement markings:
a. Use pilot line method for the placement.
b. Use is limited to 14 calendar days.
c. Spacing minimum: every 40 feet.
d. Double yellow line shall have 2 pieces of tape side by side with a 4-inch space between.
e. Painted temporary striping shall be 4 inches wide unless specified otherwise:
1) Do not use painted temporary striping on the existing pavement or on final wearing course of pavement.
2. Existing pavement markings:
a. Remove either painted or raised pavement markers that are not applicable or are within the transverse limits of the temporary travel lanes to the satisfaction of the Engineer.
b. Painting over existing markings is not permitted.

Q. Placement and maintenance of traffic control devices:
1. Maintain required traffic control devices and trenches within the right-of-way at all times, 24 hours per day, 7 days per week including holidays and weekends.
2. Replace in kind signs and street markings damaged by the construction:
a. Replace the whole stripe or marking in its entirety on partial damaged lane stripes and traffic lettering.
3. Remove traffic control devices not in use, or that will not be used for a period greater than 24 hours, from the work area:
a. Do not store unused traffic control devices on sidewalk unless the sidewalk is closed and an approved barricade plan is provided for rerouting pedestrians.

4. Maintain barricades and other traffic control devices in clean and effective condition and replace devices in poor condition immediately.
5. Begin placing barricades in the direction of traffic and remove them in the direction of opposing traffic.

R. Flaggers:
1. Provide flaggers in accordance with applicable requirements.

S. Residential areas:
1. Notify adjacent residents as applicable at least 4 days prior to restricting driveway access or starting any work, using "door knob type" Notices approved by the Engineer:
   a. Notices shall describe the impending work.
   b. Notices shall also identify dates and stages of work.
2. Give special consideration to multi-family residential complexes and other high-density uses.
3. Traffic Control Plan must include provisions for emergency service providers such as medical, fire, and police.

## 1.07 NOTIFICATION PLAN

A. Submit Notification Plan to Engineer for approval.

B. Define who will notify, how they will notify, and when they will notify:
1. Notify affected emergency agencies, residences, and businesses within the area of current work 15 days prior to start of operations.
2. Notify AHJ for any traffic control or Work areas affecting traffic signals, public bus routes, or bus stops at a minimum of 72 hours prior to any the work.

C. Notify Engineer prior to the start of operations and submit notification to Engineer 15 days prior to start of operations.

D. Notify the AHJ a minimum of 2 working days prior to the anticipated beginning of construction.

E. Provide street closure details related to the notification of the following:
1. Emergency services, such as police and fire.
2. Other services, such as mail and garbage collection.

F. Residential areas:
1. Notify adjacent residents as applicable at least 4 days prior to restricting driveway access or starting any work, using "door knob type" Notices approved by the Engineer:
   a. Notices shall describe the impending work.
   b. Notices shall also identify dates and stages of work.

G. Temporary closing:
1. At least 2 weeks prior to temporarily closing any part of the street, sidewalk, driveway, or other access to pedestrian or vehicle traffic, obtain approval from AHJ.

H. Contractor will immediately notify the AHJ of emergency change requests affecting life and property.

I. The provisions of this Section do not relieve the Contractor from the responsibility to provide such additional devices or take such measures as may be necessary to ensure public safety:
   1. Contractor shall immediately repair or replace any component in the Traffic Control system that is damaged, displaced, or ceases to operate or function as specified.
   2. When lane closures are made for work periods only, at the end of each work period, remove all components of the traffic control system, except portable delineators placed along open trenches or excavation adjacent to the traveled way, from the traveled way, shoulder, and auxiliary lanes.
   3. Upon completion of the work requiring lane closure, remove all components of the Traffic Control system from the site of the work and shall become the property of the Contractor.

J. Contractor shall maintain all traffic control devices installed in the field. This shall include patrolling the devices to ensure that they are in the correct locations and in good repair. All construction signs shall be kept clean and readable at all times.

K. Contractor shall designate in writing a representative in charge of all traffic control on the project site. This representative shall be responsible for the care and maintenance of all devices.

L. Access to driveways adjacent to the construction work zone shall be maintained at all times, if at all possible. Additional cones, delineators, traffic plates, and flaggers may be required to delineate the driveway access route through the construction work zone. A minimum of one travel lane shall be maintained across the driveways, unless prior written approval is obtained from the Traffic Engineer.

M. Through travel lanes maintained during construction shall be a minimum of 11 feet or the existing lane width wide. Left-turn and right-turn lanes maintained during construction shall be a minimum of 10 feet wide:
   1. Barricades or barrier rails shall be located a minimum of 2 feet beyond the outside of any travel lane.
   2. Travel lanes located along curb and gutter shall be measured from the lip of gutter.
   3. Travel lanes for each roadway segment shall be opened when the underground construction activities are complete. If additional construction activities are required to complete the roadway in accordance with the contract documents, the Contractor shall completely remove all traffic control devices until additional construction activates commence on the segment of roadway.

N. Contractor shall stage the work at each intersection to accommodate turning vehicles, including trucks and emergency vehicles, at all times, except as indicated in the concept traffic control plan set.

O. Contractor shall stage the work at each intersection to accommodate turning vehicles, including trucks and emergency vehicles, at all times, except as indicated in the concept traffic control plan set.

P. Coordinate all lane closures with City of Sausalito.

## PART 2 PRODUCTS

### 2.01 MATERIALS

A. Materials shall conform to the requirements of the AHJ and as specified in this Section.

### 2.02 TEMPORARY STRIPING

A. Temporary traffic striping tape material shall conform to requirements of the AHJ.

B. Tape shall be 4 inches wide and 4 feet long. The color of the tape shall match the color of the existing line.

### 2.03 PERMANENT STRIPING

A. Permanent striping shall conform to the requirements of the AHJ.

### 2.04 TEMPORARY PAVEMENT

A. Temporary pavement may be required to maintain required number of lanes or lane widths:
   1. Hard surfaced with a minimum of 1 1/2 inches of asphalt-concrete pavement and maintained in a smooth and usable condition for the duration of the detour and/or bypass.
   2. Upon completion of construction, remove temporary pavement and return the affected area to original condition.

## PART 3 EXECUTION

### 3.01 ENCROACHMENT PERMIT TERMS AND CONDITIONS

A. Comply with the requirements of the AHJ.

B. An approved traffic control plan will be required, prior to the anticipated beginning of construction:
   1. A pre-approved concept traffic control plan set is included in the contract documentation, for streets with the highest potential impact to traffic.
   2. The traffic control plan shall be available at the job site at all times during construction.

C. A complete permit package shall be available at the job site at all times during construction.

D. Contractors and subcontractors connected with work on this project shall have a complete copy of this permit at the site at all times or the work will be closed down until a copy is made available.

### 3.02 IMPLEMENTATION OF TRAFFIC CONTROL

A. Do not perform any lane closures or implement any part of the Traffic Control Plan until the AHJ has approved or provided the following:

1. Encroachment permit.
2. Traffic control plan (TCP).
3. Notification plan.

B. If, in the Engineers judgment, a condition exists that is dangerous to the public safely, the Owner may immediately remedy it by any means available, and deduct the cost of the remedy from amounts owed the Contractor by the Owner.

END OF SECTION

# SECTION 01560

# ENVIRONMENTAL CONTROLS

## GENERAL

### 1.01 SCOPE

A. The Contractor shall provide facilities, establish procedures, and conduct construction activities in a manner which will ensure compliance with the environmental regulations and related Contract requirements controlling construction activities at Project Site. The Contractor shall designate one person, the General Superintendent or other, to enforce strict discipline on activities related to generation of wastes, pollution of air/water/soil, generation of noise, and similar harmful or deleterious effects which might violate regulations or reasonably irritate persons at or in vicinity of Project Site.

B. Related Sections:
   1. Section 01060 – Regulatory Requirements and Permits.
   2. Section 01324 – Construction Progress Schedules and Reports.
   3. Section 01330 – Submittal Procedures.

### 1.02 SUBMITTALS

A. Develop an Environmental Protection Plan and submit in accordance with Section 01330, Submittal Procedures, within thirty (30) days from the date of the Notice to Proceed. The Environmental Protection Plan shall include, but not be limited to, the following items:
   1. Copies of required permits.
   2. Proposed disposal site(s).
   3. Copies of any agreements with public or private landowners regarding equipment, materials storage, borrow sites, fill sites, or disposal sites. Any such agreement made by the Contractor shall be invalid if its execution causes violation of local or regional grading or land use regulations.

B. Distribute the favorably reviewed plan to all employees and to all subcontractors and their employees.

### 1.03 SITE MAINTENANCE

A. The Contractor shall keep the work site clean and free from rubbish and debris. Materials and equipment shall be removed from the site when they are no longer necessary. Upon completion of the work and before final acceptance, the work site shall be cleared of equipment, unused materials, and rubbish to present a clean and neat appearance.

B. Waste material of any kind will not be permitted to remain on the Site of the Work or on adjacent streets. Immediately upon such materials becoming unfit for use in the Work, they shall be collected, carried off the Site and disposed of by the Contractor. Paper and trash that can be carried by wind shall be placed in sealed containers.

C. The Contractor shall keep all buildings occupied by the Contractor clear of all refuse, rubbish and debris that may accumulate from any source and shall keep them in a neat condition to the satisfaction of the Construction Manager.

D. In the event that waste material, refuse, debris and/or rubbish are not so removed from the Project Site by the Contractor, the District reserves the right to have the waste material, refuse, debris and/or rubbish removed and the expense of the removal and disposal charged to the Contractor.

E. Paints, solvents, and other construction materials shall be handled with care to prevent entry of contaminants into storm drains, surface waters, or soils.

## 1.04 STREET CLEANING

A. The Contractor shall be responsible for preventing dirt and dust from escaping from trucks departing the Project Site, by covering dusty loads, washing truck tires before leaving the Site, or other reasonable methods.

B. When working dump trucks and/or other equipment on paved streets and roadways, the Contractor will be required to clean said streets as required by the Construction Manager to remove dirt caused by the Contractor's activities. The use of water in amounts, which result in mud on public streets, is not acceptable as a substitute for sweeping or other methods. Equipment for this operation shall be on the Project Site or available at all times.

C. In the event that the above requirements are violated and no action is taken by the Contractor after notification of infraction by the Construction Manager, the District reserves the right to have the streets in question cleaned by others and the expense of the operation charged to the Contractor.

## 1.05 DUST AND AIR POLLUTION CONTROL

A. The Contractor shall not discharge smoke, dust, and other contaminants into the atmosphere that violate the regulations of any legally constituted authority. The Contractor shall also abate dust nuisance by cleaning, sweeping, and sprinkling with water, or other means as necessary. The use of water, in amounts which result in mud on public streets, is not acceptable as a substitute for sweeping or other methods.

B. The Contractor shall maintain all pollution control devices on all mechanical equipment in good working order and all such devices shall be properly connected to said equipment.

C. The Contractor will not be allowed to use rapid-cure cutback asphalt in accordance with the Bay Area Air Quality Management District's Rules and Regulations, Regulation 8, Rule 15.

D. The Contractor shall be required to reduce particulate emissions by complying with the Bay Area Air Quality Management District. The Contractor shall provide the following measures as a minimum:
   1. Enclose, cover, or water all soil stockpiles as needed to maintain dampness and prevent visible dust emissions. The amount of watering may depend upon temperature, humidity, and wind speed for any given day. Alternatively, a higher degree of emission reduction can be achieved through installation of sprinklers on all soil stockpiles. Contractor is advised that high wind conditions are prevalent at the Site.
   2. Water all exposed soil as needed to maintain dampness and prevent visible dust emissions. The amount of watering may vary depending upon temperature, humidity, and wind speed for a given day.
   3. Water all haul roads as necessary to maintain dampness and prevent visible dust emissions. The amount of watering may vary depending upon temperature, humidity, and wind speed for a given day.
   4. Maintain adequate freeboard or secure covering of all haul/dump trucks sufficient to prevent visible dust emissions and to prevent soil spillage on to surrounding roadways.

## 1.06 NOISE CONTROL

A. The Contractor shall comply with applicable laws, regulations, and ordinances which apply to any work performed pursuant to the Contract. If the requirements of this Section are more restrictive than those of the local regulations, the requirements of this Section shall govern.

B. Where applicable, Contractor shall provide privacy fencing around the project worksite. In addition, all fencing between the project site and residential buildings shall include a continuous layer of mass loaded vinyl the full fence height to further suppress construction noise from private residences.

C. Each internal combustion engine, used for any purpose on the job or related to the job, shall be enclosed and be equipped with a muffler of a type recommended by the manufacturer. No internal combustion engine shall be operated on the project without said muffler and enclosure. Use "quiet package" or "hush" equipment which is readily available for such equipment as trailer-mounted compressors, generators, welders, etc. All equipment shall be operated in the quietest manner practicable.

D. Contractor shall be required to locate all fixed construction equipment such as compressors and generators as far as feasibly possible from sensitive receptors. Contractor shall shroud or shield all impact tools.

E. Where possible, the Contractor shall use electric rather than diesel or gas-powered equipment.

F. There shall be no start-up of machines or equipment, no delivery of materials or equipment, no cleaning of machines or equipment and no servicing of equipment except during the permitted hours of construction involving noisy operations.

G. Amplified sound and other forms of loud communication constituting a nuisance, at the sole discretion of the Construction Manager, shall not be permitted.

H. Material stockpiles and/or vehicle staging areas shall be located as far as practicable from dwellings.

I. The Contractor shall designate a disturbance coordinator responsible for responding to noise complaints. The name and telephone number of the coordinator shall be clearly posted at the construction site. The disturbance coordinator shall determine causes and implement measures to mitigate the noise impact, including the enforcement of the allowable hours of construction, the identification of poorly muffled equipment and requiring its repair or replacement; and recommending temporary construction noise barriers.

## 1.07 TREE AND PLANT PROTECTION

A. Temporary tree protection:

1. The Contractor shall carefully protect existing trees from damage by construction activities. Additional requirements for specific trees may be shown on the Plans or designated in the Contract Documents.
2. All trees and bushes shall be protected in place until marked for removal by the Construction Manager. Contractor shall request an on-site visit with the Construciton Manager prior to performing any work on-site.
3. All tree trunks shall be wrapped in fabric and wood (2x4 or similar) to protect trunks. Do not disturb roots within any protected tree's drip line. Contact the Construction Manager for examination of any roots 2" or larger in diameter which are in the way of construction prior to disturbing them. In the event roots need to be cut they shall be clean cut and wrapped in burlap to protect fungus &/or insect intrusion.
4. Every reasonable effort shall be made to avoid creating conditions adverse to the tree’s health:
   a. The natural ground within the dripline of protected trees shall remain undisturbed.
   b. The dripline area of protected trees shall be identified on the ground by a circle with a radius measurement from the trunk of the tree to the tip of its longest limb.
   c. No limb shall be cut back in order to change the dripline measurement.
   d. The area within the dripline is a critical area of the tree’s root zone and defines the minimum protected area of each tree.
   e. No vehicles, construction equipment, temporary buildings, supplies, materials or facilities shall be driven, parked, stockpiled or located within the dripline of protected trees.
   f. No trees outside the construction limits shall be removed or damaged, unless authorized by the Construction Manager.
5. If a tree is damaged or destroyed by construction (other than those designated for removal), the Contractor shall replace it in species, size and grade with a healthy tree as directed by the Construction Manager. Where it is necessary to replace a tree damaged by construction, the Contractor shall bear all expenses required to establish the replacement tree and paying tree removal fees.

B. Cultivated areas and other surface improvements:
1. All landscaped areas and other surface improvements which are damaged by actions of the Contractor shall be restored.

2. The Contractor shall minimize vegetation removal.
3. Areas shall not be cleared until construction activities require the work.
4. Erosion controls shall be in place prior to clearing and grading activities.

C. Other areas to be protected:
1. Environmentally sensitive areas are indicated on the Drawings.
2. The Contractor shall erect a protective fence around the area to be protected.
3. The protective fence shall be 4 feet tall, international orange high density polyethylene resin (Visi-Barrier or equal).
4. Posts shall be heavy duty steel T-posts with corrosion resistant coating spaced at 5 feet on centers.

## 1.08 WATER QUALITY PROTECTION AND WATER CONTROL

A. Field Management Practices for Water Quality Protection, Appendix B, contains a Field Management Practices for Water Quality Protection Manual. The Contractor is required to comply with these requirements.

B. Temporary pumping and drainage:
1. The Contractor shall conform to the regulations and requirements of legally authorized surface water management agencies.
2. The Contractor shall be responsible for keeping trenches and other areas free from water as required to permit continuous progress of, or to prevent damage to, its own work or the work of others. The Contractor's operations shall be conducted in such a manner as to prevent sediment from reaching existing sewers, storm drains, and creeks.
3. The Contractor shall cover exposed excavated areas and spoils piles when runoff from rain is or would be likely to cause turbidity to enter local waterways. The Contractor shall suspend work in the rain if such work cannot be performed without causing turbid runoff.
4. To avoid solids or turbid runoff from entering local waterways, the Contractor shall cover, secure, and/or berm excavated area and spoils piles and employ other methods as necessary such as hay bale around storm drains or around construction sites; use of cut and cover construction method; or use of sedimentation basins.

## 1.09 OIL SPILL PREVENTION AND CONTROL

A. General:
1. The Contractor shall be responsible for prevention, containment, and cleanup of spilling of oil, fuel, and other petroleum products used in the Contractor's operations.
2. All such prevention, containment, and cleanup costs shall be borne by the Contractor.
3. The Contractor shall not discharge oil, fuel, or other petroleum products from equipment or facilities into surrounding waters or onto adjacent land.

B. Spill mitigation measures:
1. The Contractor shall, at a minimum, take the following measures regarding oil spill prevention, containment, and cleanup:
a. Fuel hoses, lubrication equipment, hydraulically operated equipment, oil drums, and other equipment and facilities shall be inspected regularly for drips, leaks, or signs of damage, and shall be maintained and stored

properly to prevent spills. Proper security shall be maintained to discourage vandalism.

b. All land-based oil and products storage tanks shall be diked or located so as to prevent spills from escaping to the water.
c. Diking and subsoils shall be lined with impervious material to prevent oil from seeping through the ground and dikes.
d. All visible oils on land shall be immediately contained using dikes, straw bales, or other appropriate means and removed using sand, ground clay, sawdust, or other absorbent material, which shall then be properly disposed of by the Contractor.
e. Waste materials shall be temporarily stored in drums or other leakproof containers after cleanup and during transport to disposal.
f. Waste material shall be disposed of off property at an approved site.

## 1.10 GROUNDWATER DISCHARGE TO DISTRICT FACILITIES

A. On-site disposal of groundwater is permitted subject to the following conditions:
1. Water disposed into on-site sewers must comply with the District's discharge limits provided in the appendices.
2. The Contractor shall sample the groundwater prior to initial discharge into on-site sewers. Submit test results and receive approval of the water prior to initial discharge. Continue to sample the water on a monthly interval for the entire duration of discharge and submit the monthly test results to the Owner for acceptance.
3. Mud and silt are not acceptable for discharge into District or City facilities. The use of silt socks, baffled separation tanks or other means may be required to ensure silt levels are acceptable to the District.
4. The rate at which groundwater is discharged to District or City facilities must be approved by the Distrcit in advance and continuously monitored by the Contractor at all times. It may be required to reduce discharge rates or eliminate discharge of ground water during significant storm events.
5. The Owner may terminate acceptance of on-site groundwater discharge at any time.
6. Coordinate groundwater discharge location with the Owner.

## 1.11 MANAGEMENT OF HAZARDOUS MATERIAL AND/OR WASTE

A. Notification: If the Contractor causes or permits the spillage or overflow of any oil, or petroleum product, hazardous substance, contaminant, waste or wastewater, including overflows or releases of untreated or treated (partially or fully) wastewater, and backups into buildings and on private property, the Contractor shall notify the District as soon as possible to the extent notification can be provided without substantially impeding cleanup or other emergency measures. In no event shall such notification be later than one (1) hour after knowledge of the occurrence.

B. Storage: The Contractor shall label and store all hazardous materials, such as pesticides, paints, thinners, solvents, and fuels, and all hazardous wastes, such as waste oil and antifreeze, in accordance with all applicable state and federal regulations. The Contractor shall store all hazardous materials and all hazardous wastes in accordance with secondary containment regulations. All such materials and wastes shall be covered, as needed, to avoid rainwater becoming polluted with hazardous constituents, which could result in potential management of collected rainwater as hazardous waste. The Contractor shall keep an accurate, up-to-date inventory, including Material Safety Data Sheets (MSDS), of hazardous materials and hazardous wastes stored on site.

C. Usage: When rain is forecast within 24 hours or during wet weather, the Contractor shall refrain from applying chemicals in outside areas. The Contractor shall follow material manufacturer's instruction regarding uses, protective equipment, ventilation, flammability, and mixing of chemicals. The Contractor shall post warning signs in areas treated with chemicals.

D. Disposal: The Contractor shall arrange for regular hazardous waste collection to comply with time limits on storage of hazardous wastes. The Contractor shall dispose of hazardous waste in accordance with this Section 00700, General Conditions. The Contractor shall not wash any spilled material into streets, gutters, storm drains, or creeks and shall not bury spilled hazardous materials. The Contractor shall report any hazardous material spills to the District in accordance with paragraph A above.

E. Chemicals: All chemicals used during project construction or furnished for project operation, whether defoliant, soil sterilant, herbicide, pesticide, disinfectant, polymer, reactant, or other classification, shall show approval of either the U.S. Environmental Protection Agency or the U.S. Department of Agriculture. Use of all such chemicals and disposal of residues shall be in strict accordance with the printed instructions of the manufacturer.

## 1.12 CONCRETE, GROUT, AND MORTER WASTE MANAGEMENT

A. Concrete Truck/Equipment Washout: The Contractor shall not wash out concrete trucks or equipment into streets, gutters, storm drains, or creeks. The Contractor shall perform washout of concrete trucks or equipment off site or in a designated area on site where the water will flow onto dirt or into a temporary pit in a dirt area. The Contractor shall let the water percolate into the soil and dispose of the hardened concrete in a trash container. If a suitable dirt area is not available, the Contractor shall collect the wash water and remove it off site.

B. Exposed Aggregate Concrete Wash Water: The Contractor shall avoid creating runoff by draining water from washing of exposed aggregate concrete to a dirt area. If a suitable dirt area is not available, the Contractor shall filter the wash water through straw bales or equivalent material before discharging to a storm drain. The Contractor shall collect sweepings from exposed aggregate concrete for disposal.

## 1.13 PAINT DISPOSAL AND CLEAN-UP

A. Disposal of Unused Paint: The Contractor shall carefully use, store, and dispose of paint, solvents, chemicals, and waste materials in compliance with all applicable state and federal regulations. The Contractor shall not dispose of paint to sanitary sewer systems or storm drains. The Contractor shall utilize other recycling and disposal services as follows:
   1. “Recycling Centers” and “Waste Disposals” as may be listed in the yellow pages.
   2. Local household hazardous waste facility if appropriate.

B. The Contractor may dispose of small amounts of leftover latex (water-based) paint by applying the paint to the surface of an item to be discarded and allowing it to dry thoroughly, then disposing of it in a dumpster.

C. The Contractor shall store these materials and conduct cleaning of painting equipment and tools in a designated area that will not allow run-on of storm water or runoff of spills. The Contractor shall not allow wash water from cleaning of painting equipment and tools into streets, gutters, storm drains, or creeks.

D. Disposal of Paint Cleanup Waste: The Contractor shall remove as much excess paint as possible from brushes, rollers, and equipment before starting cleanup:
   1. The Contractor shall not discharge cleaning wastes from oil-based paints, buckets, brushes, or tools to the sanitary sewer system. The Contractor shall retain a certified waste hauler to recycle or to dispose of cleaning wastes from oil-based paints at the Contractor’s expense.
   2. The Contractor may discharge very small amounts of cleaning wastes from brushes, rollers, buckets, and tools contaminated with latex (water-based) paints to the sanitary sewer system provided they do not contain additives with pollutants of concern (e.g., mercury, tributyltin). Brushes, rollers, and tools containing latex paints may be washed over a sink with plenty of water. Buckets containing latex paints shall first be emptied into the original can or discarded as specified above. Should excessive amounts of paint or solvent be found in the wastewater discharged, the Contractor may be subject to enforcement action by the District in accordance with the District Code.
   3. The Contractor shall not discharge any of these paint cleanup wastes to storm drains, streets, gutters, or creeks.
   4. Waste Disposal: The Contractor shall dispose of waste thinner, solvent, and sludge from cleaning of equipment and tools as hazardous waste, as described in paragraph C.3 above. The Contractor shall dispose of excess thinners, solvents, and oil- and water-based paint as hazardous waste.

## 1.14 CONTAMINATED SOILS/MATERIALS

A. Contaminated soils and materials shall include, but not be limited to, pollutants and/or materials defined as hazardous substances or hazardous wastes under the Resource Conservation and Recovery Act (RCRA), the Comprehensive Environmental Response Compensation and Liability Act (CERCLA), the Hazardous Substances Control Act (Health and Safety Code Section 25300 and following), the Hazardous Waste Control Act (Health and Safety Code Section 25100 and following), or as defined as pollutants or contaminants under any other applicable state and federal laws and regulations. Said materials shall include, but not be limited to, friable asbestos, PCBs, petroleum products and its byproducts, and waste oil, among other substances.

B. Contractor shall notify the District by person or by telephone within two hours of discovery as to any contaminated soil or materials on or beneath the job site, including in buildings and related structures that could be impacted by the construction Project so discovered by the Contractor, its personnel, agents, representatives, consultants, or any other persons working under the direction and control of the Contractor. In addition, written notice shall be delivered to the District by the Contractor within 24 hours of discovery. Contractor shall require that like provisions be inserted in all contracts with its subcontractors and tiers of subcontractors. This shall not relieve the Contractor from the obligation and responsibility to ensure that the provisions of this General Condition are complied with.

C. The Contractor and its subcontractors shall immediately cease any and all work at the location of the discovery of the contaminated soils or materials until further notice from the District or the Engineer.

D. However, if the Contractor is specifically directed to conduct appropriate cleanup operations with respect to the contaminants discovered, the Contractor shall proceed with these operations. In addition, the Contractor shall notify the District of the discovery of said contaminants in the manner set forth above. Further, if the contaminants substantially vary from the description in the Contract as to type of material, quality of materials, level of concentration or toxicity, location, as to the materials' affect on groundwater, or vary in any other substantial manner from the description as set forth in the Contract, the Contractor shall immediately cease operations and notify the District in the manner set forth above.

E. All work done by the Contractor with respect to cleanup, removal, and remedial actions concerning the contaminated soils or materials shall be done according to law. All required notices shall be given by the Contractor to the County Environmental Health Hazard Materials Section and other appropriate governmental agencies, including the State Department of Toxic Substances Control and Regional Water Quality Control Board-San Francisco Bay Region, among others. The Contractor or any subcontractor doing such work on behalf of the Contractor shall have the appropriate certification, licenses, and permits prior to commencing any such cleanup, removal, and/or remedial work. The District shall not be responsible for the negligence of or violation of any laws, rules, regulations, or ordinances by the Contractor or any of the Contractor's subcontractors, agents, consultants, employees, or representatives in doing such cleanup, removal, and remedial work.

F. If any of the cleanup, removal, containment, and remediation work substantially impacts upon the community, including, but not limited to, traffic, odor, and health issues, the District reserves the right to direct that the manner of operations by the Contractor be revised accordingly to reduce or eliminate the adverse effects.

## 1.15 BYPASSING OF SEWAGE FLOW

A. Renovation of the pump stations includes connection to existing sanitary sewers. Flow control and bypass pumping will be required to complete these connections. Bypass sewage pumping shall be provided at the Contractor's cost wherever and whenever required to ensure uninterrupted sewer service:
   1. Reference Section 02552, Temporary Bypass Pumping for further information and requirments.
   2. Reference Section 01140, Work Restriction for construction sequencing and constraints related to bypassing of sewage flows.

B. Connections and utility changes must be coordinated with the District. The Contractor shall notify the Engineer in writing at least twenty one (21) days in advance of any required shutdown.

C. Bypassing of sewage flows shall be done in such a manner that it will not damage private or public property or create a nuisance or public menace. Bypassing of sewage flows shall not cause the backing up and flooding of upstream connections. The Contractor shall be liable for all damages and fines associated with this work.

D. All chemicals used during project construction or furnished for project operation, whether defoliant, soil sterilant, herbicide, pesticide, disinfectant, polymer, reactant, or other classification, shall show approval of either the U.S. Environmental Protection Agency or the U.S. Department of Agriculture. Use of all such chemicals and disposal of residues shall be in strict accordance with the printed instructions of the manufacturer.

## PART 2 - PRODUCTS (NOT USED)

## PART 3 - EXECUTION (NOT USED)

## PART 4 - ADDITIONAL REQUIREMENTS (NOT USED)

**END OF SECTION**

# SECTION 01600

# PRODUCT REQUIREMENTS

## PART 1 GENERAL

### 1.01 SUMMARY

A. Section Includes: Product requirements, product selection, products schedule, execution, manufacturer's instructions, and delivery, handling, and storage.

B. Related Sections:
   1. Section 01330 – Submittal Procedures.
   2. Section 01745 – Spare Parts, Special Tools and Maintenance Materials.

### 1.02 PRODUCT REQUIREMENTS

A. Comply with Specifications and referenced standards as minimum requirements.

B. Provide products by same manufacturer when products are of similar nature, unless otherwise specified.

C. Provide identical products when products are required in quantity.

D. Provide products with interchangeable parts whenever possible.

E. Require each equipment manufacturer to have maintenance facilities meeting the following requirements:
   1. Minimum three years operational experience.
   2. Location in continental United States.
   3. Equipment and tools capable of making repairs.
   4. Staff qualified to make repairs.
   5. Inventory of maintenance spare parts.

F. Provide evidence of product compliance pursuant to appropriate specification section, this Section, and Section 01330 - Submittal Procedures.

### 1.03 PRODUCT SELECTION

A. When products are specified by standard or specification designations of technical societies, organizations, or associations only, provide products which meet or exceed reference standard and Specifications.

B. When products are specified with names of manufacturers but no model numbers or catalog designations, provide:
   1. Products by one of named manufacturers which meets or exceeds Specifications.
   2. Accepted or equals.

C. When products are specified with names of manufacturers and model numbers or catalog designations, provide:

1. Products with model numbers or catalog designations by one of named manufacturers.
2. Accepted or equals.

D. When products are specified with names of manufacturers, but with brand or trade names, model numbers, or catalog designations by one manufacturer only, provide:
1. Products specified by brand or trade name, model number, or catalog designation.
2. Products by one of named manufacturers proven in accordance with requirements for or equals to meet or exceed quality, appearance and performance of specified brand or trade name, model number, or catalog designation.
3. Accepted or equals.

E. When products are specified with only one manufacturer followed by "or Equal," provide:
1. Products meeting or exceeding Specifications by specified manufacturer.
2. Accepted or equals.

## 1.04 APPROVED EQUAL AND SUBSTITUTION

A. Specified Item: Material, equipment, product, thing, or service referenced in this Project Plans and Specifications that has been identified by specific brand, manufacturer, model number, catalog number, or trade name.

B. Equal Items: Items, as referenced in this Project Plans and Specifications are those, which, to the District's knowledge, meet the requirements of the Project Plans and Specifications and are considered equal to the Specified Items.

C. Substitutions: Substitutions are considered changes to the Contract.

D. Submissions for Evaluation:
1. The Contractor shall submit to the District in accordance with Public Contract Code Section 3400, after contract award but no later than thirty (30) days after the date of Notice to Proceed, proposal(s) for acceptance of a proposed Equal Item for a Specified Item or a Substitution. At the sole discretion of the District, District may give written consent to the submission of the proposed Equal Item or Substitution after the expiration of the thirty (30) day time limit.
2. The Contractor shall completely fill out the Material/Product Substitution Request Form per Section 01600.01 and submit sufficient data, drawings, samples, literature, calculations, and all other information requested by District to demonstrate to the District that the proposed Equal Item or Substitution is a suitable replacement for the Specified Item(s).
3. Failure of the Contractor to submit the proposed Equal Item or Substitution for review in the manner and time described above shall be sufficient cause for rejection by the District of the proposed Equal Item or Substitution.
4. Burden of proof as to the submitted items being equal to the Specified Items, or a suitable Substitution, is the responsibility of the Contractor.

E. Evaluation as Equal:
1. Submission of items which are proposed as equal to the Specified Items will be evaluated in accordance with the following provisions.

2. In addition to the complete Substitution Request Form located at the end of this Section, and information specified above, Contractor shall provide a table showing equivalency between the Specified Item and the proposed equal item.
3. The District's evaluation of the submitted items proposed as being equal to the Specified Items is based on, but not limited to, the following:
   a. Performance.
   b. Functionality.
   c. Efficiency.
   d. Durability.
   e. Life cycle costs.
   f. Ease and economy of maintenance and operation.
   g. Construction and physical characteristics as compared to the Specified Items, or as delineated in the Project Plans and Specifications.
   h. Dimensional compatibility with the materials it combined to produce a unified design system.
   i. Compatibility with products in use.
   j. Impact to Project design, construction schedule, or construction sequencing.
   k. All aspects of finished appearance including form, texture, and color, that may affect other design elements.
4. The District will be the sole judge in this matter. In the event the District rejects the proposal items based on one of the above criteria, the Contractor shall submit the Specified Items.

F. Submission of items which are proposed as substitution of the Specified Items shall be subject to requirements for proposed equal evaluation and the following additional provisions:
   1. Substitution(s) of Specified Item(s) proposed by the Contractor may require modifications in the Project design, Project schedule, and/or construction sequencing. The Contractor shall identify all necessary project modification required for the substitution(s). Necessary project modifications may include, but not be limited to, construction cost (credit), electrical, instrumentation, structural, mechanical, architectural, testing, engineering costs, and other related modifications.
   2. The Contractor is responsible for all costs associated with the substitutions(s) including submittal reviews and any project redesigns and modifications. Contractor refusal to accept any of these costs shall be just cause for disapproval of the substitution(s).
   3. The District will review and respond in writing to the Contractor's proposed substitution within thirty (30) days after receipt of all information the District requires to make a final determination.
   4. If the proposed items are accepted, all cost saving shall be credited to the District.

## 1.05 QUALITY ASSURANCE

A. Employ entities that meet or exceed specified qualifications, to execute the Work.

B. Inspect conditions before executing subsequent portions of the Work. Accept responsibility for correcting unsatisfactory conditions upon executing subsequent portions of the Work.

C. Secure products in place with positive anchorage devices designed and sized to withstand stresses, vibration, and racking.

## 1.06 TOOLS AND SPARE PARTS

A. See Section 01745 - Spare Parts, Special Tools and Maintenance Materials, and individual technical specification sections for additional spare parts, special tools and maintenance materials requirements.

B. All special tools and the manufacturer's standard set of spare parts required for the normal operation and maintenance of respective items of equipment shall be furnished with those items of equipment by the manufacturer. This includes special tools, instruments, accessories required for proper "in-plant" adjustment, maintenance, overhaul, and operation. Tools shall be high-grade, smooth, forged, alloy tool steel or other appropriate material required for service conditions.

C. Special tools are considered to be those tools which because of their limited use are not normally available, but which are necessary for the particular equipment, whether identified in the manufacturer's standard manual or not.

D. All spare parts shall be carefully packed in sealed, weather-resistant cartons and all tools packed in metal tool boxes with locking clasps, each labeled with indelible markings, and shall be adequately treated for a long period of storage. Complete ordering information including manufacturer's name and address, part ordering information including manufacturer, part number, part name, and equipment name and number(s) for which the part is to be used shall be supplied with the required spare parts. The tools and spare parts shall be delivered and stored in a location directed by the District no later than 30 days prior to scheduled field-testing. A list of spare parts, respectively, shall be placed in each storage container and a duplicate list included in the operations and maintenance manuals.

E. Additional and specific spare parts and tools for certain equipment provided have been specified in the pertinent Sections of the Specifications. The Contractor shall collect and store all spare parts so required in an area to be designated by the District. In addition, the Contractor shall furnish to the District an inventory listing all spare parts, the equipment they are associated with, the name and address of the supplier, and the delivered cost of each item. Copies of the actual invoice for each item shall be furnished with inventory to substantiate the delivery.

F. Special tools and spare parts shall be new and shall not be utilized by the Contractor.

## 1.07 PROTECTION OF EQUIPMENT AFTER INSTALLATION:

A. After installation, all equipment shall be protected from damage from, including but not limited to, dust, abrasive particles, debris and dirt generated by the placement, chipping, sandblasting, cutting, finishing and grinding of new or existing concrete, terrazzo and metal; and from the fumes, particulate matter, and splatter from welding, brazing and painting of new or existing piping and equipment.

B. As a minimum, vacuum cleaning, blowers with filters, protective shieldings, and other dust suppression methods will be required at all times to adequately protect all equipment.

C. During concreting, including finishing, all equipment that may be affected by cement dust must be completely covered.

D. During painting operations, all grease fittings and similar openings shall be covered to prevent the entry of paint.

E. Electrical switchgear, unit substation, and motor load centers shall not be installed until after all concrete work and sandblasting in those areas have been completed and accepted and the ventilation systems installed.

## 1.08 MANUFACTURER'S INSTRUCTIONS

A. Deliver, handle, store, install, erect, or apply products in accordance with manufacturer's instructions, Contract Documents, and industry standards.

B. Periodically inspect to assure products are undamaged and maintained under required conditions.

# PART 2 PRODUCTS

Not Used.

# PART 3 EXECUTION

Not Used.

# PART 4 ADDITIONAL REQUIREMENTS

Not Used.

END OF SECTION

**PRODUCT REQUIREMENTS SUPPLEMENT**

**MATERIAL / PRODUCT SUBSTITUTION REQUEST FORM**

Project Name:_____ Date: _____

A. We hereby submit for your consideration the following product instead of the specified item:

1. Section _____ Subarticle _____
2. Specified Item _____
3. Proposed Substitution (Mfr, Type, Model, etc.) _____

_____

B. Complete all of the following:

1. Does this substitution offer the District a cost credit (including costs for changes by other trades)?_____

   If so, how much? _____
2. Does this substitution offer earlier delivery or less construction time? _____

   How much and why? _____
3. How does this substitution affect any dimensions, layout, or details of other trades as shown on the Drawings? _____

   _____
4. What are the specific differences between this substitution and the specified item? _____

   _____

   _____

   _____

   _____

C. Attach the following items as applicable: Check if applicable

1. Manufacturer's technical data _____
2. Laboratory test or performance results _____
3. Drawings and wiring diagrams of the proposed product _____
4. Drawings & description of changes required by other trades _____
5. Samples _____
6. Manufacturer's guarantee and maintenance instructions _____
7. Documentation of code compliance for all specified uses _____

D. The undersigned agrees to pay for all additional review, design, testing, changes in the Contract

Documents and construction as a result of the acceptance of this substitution, at no cost to the District.

E. Submitted by (Firm) _____

Signature _____ Date _____

---

F. Accepted _____ Rejected _____ Revise and Resubmit _____ See attached ___

By (District / Design Engineer) _____ Date _____

END OF SECTION

# SECTION 01605

# DELIVERY, STORAGE AND HANDLING

## PART 1 GENERAL

### 1.01 SCOPE OF WORK

A. This Section specifies the general requirements for the delivery handling, storage and protection for all items required in the construction of the work. Specific requirements, if any, are specified with the related item.

### 1.02 TRANSPORTATION AND DELIVERY

A. Transport and handle items in accordance with manufacturer's instructions.

B. Schedule delivery to reduce long term on-site storage prior to installation and/or operation. Under no circumstances shall equipment be delivered to the site more than one month prior to installation without written authorization from the Owner’s Representative.

C. Coordinate delivery with installation to ensure minimum holding time for items that are hazardous, flammable, easily damaged or sensitive to deterioration.

D. Deliver products to the site in manufacturer's original sealed containers or other packing systems, complete with instructions for handling, storing, unpacking, protecting and installing.

E. All items delivered to the site shall be unloaded and placed in a manner which will not hamper the Contractor's normal construction operation or those of subcontractors and other contractors and will not interfere with the flow of necessary traffic.

F. Provide necessary equipment and personnel to unload all items delivered to the site.

G. Promptly inspect shipment to assure that products comply with requirements, quantities are correct and items are undamaged. For items furnished by others (i.e. Owner, other Contractors), perform inspection in the presence of the Owner’s Representative. Notify Owner’s Representative verbally, and in writing, of any problems.

### 1.03 STORAGE AND PROTECTION

A. Store and protect products in accordance with the manufacturer's instructions, with seals and labels intact and legible. Storage instruction shall be studied by the Contractor and reviewed with the Owner’s Representative by him/her. Instruction shall be carefully followed and a written record of this kept by the Contractor. Arrange storage to permit access for inspection.

B. Store loose granular materials on solid flat surfaces in a well-drained area. Prevent mixing with foreign matter.

C. Cement and lime shall be stored under a roof and off the ground and shall be kept completely dry at all times. All structural, miscellaneous and reinforcing steel shall be stored off the ground or otherwise to prevent accumulations of dirt or grease and in a position to prevent accumulations of standing water and to minimize rusting. Beams shall be stored with the webs vertical. Precast concrete shall be handled and stored in a manner to prevent accumulations of dirt, standing water, staining, chipping or cracking. Brick, block and similar masonry products shall be handled and stored in a manner to reduce breakage, cracking and spalling to a minimum.

D. All mechanical and electrical equipment and instruments subject to corrosive damage by the atmosphere if stored outdoors (even though covered by canvas) shall be stored in a weathertight building to prevent injury. The building may be a temporary structure on the site or elsewhere, but it must be satisfactory to the Owner’s Representative. Building shall be provided with adequate ventilation to prevent condensation. Maintain temperature and humidity within range required by manufacturer.
   1. All equipment shall be stored fully lubricated with oil, grease and other lubricants unless otherwise instructed by the manufacturer.
   2. Moving parts shall be rotated a minimum of once weekly to ensure proper lubrication and to avoid metal-to-metal "welding". Upon installation of the equipment, the Contractor shall start the equipment, at least half load, once weekly for an adequate period of time to ensure that the equipment does not deteriorate from lack of use.
   3. Lubricants shall be changed upon completion of installation and as frequently as required thereafter during the period between installation and acceptance. New lubricants shall be put into the equipment at the time of acceptance.
   4. Prior to acceptance of the equipment, the Contractor shall have the manufacturer inspect the equipment and certify that its condition has not been detrimentally affected by the long storage period. Such certifications by the manufacturer shall be deemed to mean that the equipment is judged by the manufacturer to be in a condition equal to that of equipment that has been shipped, installed, tested and accepted in a minimum time period. As such, the manufacturer will guaranty the equipment equally in both instances. If such a certification is not given, the equipment shall be judged to be defective. It shall be removed and replaced at the Contractor's expense.

END OF SECTION

# SECTION 01722

# FIELD ENGINEERING

## PART 1 GENERAL

### 1.01 SECTION INCLUDES

A. Requirements for surveying and surveying record documents.

### 1.02 REFERENCED SECTION

A. The following Section is referenced in this Section
   1. Section 01330 – Submittal Procedures
   2. Section 01770 – Contract Closeout
   3. Section 01780 – Record Documents

### 1.03 DATUM

A. Vertical and horizontal datum are based on the coordinates and benchmarks shown on the Drawings.
   1. The Contractor is to locate and protect District furnished control points prior to starting the Work and preserve control points during construction.
   2. The Contractor shall re-establish all control points disturbed by its operations at no cost to District.
   3. The elevations of any existing facilities, in particular where tie-ins to this Project are required, must be field verified by the Contractor and confirmed with relation to the elevations for the facilities under this Project.

B. The Contractor shall establish other vertical and horizontal control from these District furnished reference points as required to properly layout and construct the Work. All connections shall be installed based on actual elevations of existing structures to which connections are made.

C. The Contractor's layout shall be based upon existing structures and the vertical and horizontal datum established by the District.

D. The Contractor shall be responsible for the preservation of all existing survey monuments or permanent bench marks. Any monuments or bench marks disturbed or destroyed by Contractor shall be referenced and replaced by a licensed land surveyor.

### 1.04 QUALITY ASSURANCE

A. The Contractor’s Surveyor shall be a land surveyor registered in California or civil engineer qualified and licensed in California with at least five (5) years surveying experience of similar projects.

B. Dimensions for all existing structures, piping, paving, and other nonstructural items are taken from the available information during the District’s planning and design.

1. The Contractor shall field verify all dimensions and conditions in advance of any construction in the area.
2. Any discrepancy between the field survey by the Contractor and the information indicated in the Contract Documents shall be immediately brought to Contraction Manager's attention by written notification.
3. In all questions arising as to proper location of lines and grades, the Construction Manager's decision will be final.

C. Accuracy of the Contractor's stakes, alignments and grades may be periodically and randomly checked by the Construction Manager.
1. If requested by Construction Manager, the Contractor shall supply field labor as required, at no extra charge to District, to aid and assist the Construction Manager in checking location and grades of the work as set by the Contractor.
2. This shall include postponing parts of the Work affected by survey check, moving materials and equipment that interfere with a clear line of sight between horizontal control points and the construction work.
3. The Contractor is not to assume that Construction Manager's check substitutes or complements the Contractor's required field quality control procedures.

D. The Contractor's registered land surveyor to check the line and grade of the slab or footing concrete forms prior to the first slab or footing pour at each structure and building.

## 1.05 SUBMITTALS

A. Comply with Section 01330, Submittal Procedures.

B. Contractor to furnish Construction Manager one copy of all land surveyor notes, calculations, sketches and drawings within 48 hours after completion of each survey task.

# PART 2 PRODUCTS (NOT USED)

# PART 3 EXECUTION

## 3.01 PROJECT SURVEY REQUIREMENTS

A. As part of the bid price for the construction of the improvements the Contractor shall provide and be responsible for the layout of all work specified in the contract.

B. The Contractor shall provide all necessary surveys, field staking, and positioning for the construction of all components at the proper alignment, elevations, grades, and positions, as indicated on the Drawings and as required for the proper operation and function.

C. The Contractor shall stake the work limits and right-of-way lines prior to the start of sitework.

D. The Contractor shall lay out all work, including structures and pipelines, and shall be solely responsible for executing the Work in accordance with the lines and grades indicated.

E. The Contractor shall survey the four existing effluent weir gates that are located on the west end of the oxidation ditches. At each weir gate survey the elevation of the top of the weir gate frame, top of weir plate and the top of the limit nut when oxidation ditch is in service.

## 3.02 RECORD DOCUMENTS

A. The Contractor is to prepare, maintain and submit Record Documents as specified in Section 01780, Record Documents. The Contractor's land surveyor is to affix his signature and registration number to applicable record drawings certifying the accuracy of lines and grades shown.

B. Submit survey record drawings before final completion as specified in Section 01770, Contract Closeout.

END OF SECTION

# SECTION 01734

# WORK WITHIN PUBLIC RIGHT-OF-WAY

## PART 1 GENERAL

### 1.01 SUMMARY

A. Section includes: Requirements for maintenance, support, protection, relocation, reconstruction and adjusting-to-grade, restoration, construction of temporary and new facilities, and abandonment of existing utilities affected by construction work within the public right-of-way.

### 1.02 DEFINITIONS

A. Utility: For purpose of this Section, utility means any public or private service, such as electric light and power systems; gas distribution systems; telephone, telegraph, cable television and other communication services; water distribution; storm drain and sanitary sewer services; police and fire communication systems; street lighting and traffic signs and signals; parking meters; and steam distribution systems.

B. Trenching:
   1. Open trench:
      a. General: Includes excavation, pipe laying, backfilling, and pavement replacement.
   2. Any excavated areas shall be considered as "open trench" until all pavement replacement has been made, or until all trenches outside of pavement replacement areas have been backfilled and compacted in accordance with these Contract Documents.

### 1.03 DESIGN REQUIREMENTS

A. Trenching:
   1. Except where otherwise specified, indicated on the Drawings, or accepted in writing by the Engineer, the maximum length of open trench, where construction is in any stage of completion, shall not exceed the linear footage as set forth below. Descriptions under following area designations are general in nature and may be amended in writing by the Engineer due to particular or peculiar field conditions:
      a. Business District Areas maximum 100 linear feet: Store front areas.
      b. Commercial Areas maximum 400 linear feet: Industrial, shopping centers, churches, schools, hotels, motels, markets, gas stations, government and private office buildings, hospitals, fire and police stations, and nursing homes.
      c. Residential Areas maximum 1 Block or 600 linear feet, whichever is the least: Single and multi-family residences, apartments, and condominiums.
      d. Undeveloped Areas maximum 1,000 linear feet: Parks, golf courses, farms, undeveloped subdivided land.
   2. Completely backfill trenches across streets and install temporary or permanent pavement as soon as possible after pipe laying.

B. Site conditions:
   1. Use substantial steel plates with adequate trench bracing to bridge across trenches at street and alley crossings, commercial driveways, and residential driveways where trench backfill and temporary patch have not been completed during regular working hours. Trench-plates installed in roadways shall be recessed to be flush with existing asphalt. Using "cut back" around trench-plates is not acceptable. Sausalito has a high volume of bicycle traffic which requires recessed trench-plates for safety.
   2. Provide safe and convenient passage for pedestrians.
   3. Maintain access to fire stations, fire hydrant, and hospitals at all times.
   4. Provide traffic control devices, barricades, and signage as required by the regulating agency.

## 1.04 SUBMITTALS

A. Traffic control plan: Submit detailed traffic control plan for acceptance by jurisdictional agency.

## PART 2 PRODUCTS

Not Used.

## PART 3 EXECUTION

Not Used.

END OF SECTION

# SECTION 01738

# SELECTIVE ALTERATIONS AND DEMOLITION

## PART 1 GENERAL

### 1.01 SUMMARY

A. Section includes:
   1. Cutting or modifying of existing and new work.
   2. Partial demolition of structures.

B. Related sections:
   1. Section 01140 - Work Restrictions.
   2. Section 01330 - Submittal Procedures.

### 1.02 REFERENCES

A. American National Standards Institute (ANSI):
   1. A10.6 - Safety and Health Program Requirements for Demolition Operations.

B. International Concrete Repair Institute (ICRI):
   1. Guideline No. 310.2R - Selecting and Specifying Concrete Surface Preparation for Sealers, Coatings, Polymer Overlays, and Concrete Repair.
   2. Guideline No. 310.3R - Guide for the Preparation of Concrete Surfaces for Repair Using Hydrodemolition Methods.

### 1.03 DEFINITIONS

A. Chipping hammer: A hand-operated electrical or pneumatic demolition device for removal of hardened concrete or masonry materials having a weight of less than 15 pounds and an impact frequency of greater than 2,000 blows/minute.

B. Concrete breaker: A hand-operated electrical or pneumatic demolition device for removal of hardened concrete or masonry materials having a weight greater or impact frequency less than the limits defined for a chipping hammer.

C. Coring equipment: Non-impact rotary drill with diamond cutting edges.

D. Heavy abrasive blast: Cleaning procedure by which various abrasives materials, or steel shot, are forcibly propelled by high pressure against a surface to remove loose material and produce a concrete surface roughened to ICRI Surface Profile CSP-7, or higher, as specified in ICRI 301.3R.

### 1.04 DESCRIPTION OF WORK

A. The work includes partial demolition, cutting, and modifying of existing facilities, utilities, and/or structures.

B. These facilities may be occupied and/or operational. Satisfactory completion of the work will require that the Contractor plan activities carefully to work around

unavoidable obstacles and to maintain overall stability of structures and structural elements. It will further require restoration of existing facilities, utilities, and structures that are to remain in place and that are damaged by demolition or removal operations.

## 1.05 SUBMITTALS

A. General:
   1. Submit specified in Section 01330, Submittal Procedures.

B. Shop drawings: Include:
   1. The location of all embedded items shall be documented using diagrams and/or other media that clearly show dimensions and locations of existing structural elements, existing embedded items and any new embedded items and their relationship to each other.

C. Submittals for information only:
   1. Permits and notices authorizing demolition.
   2. Certificates of severance of utility services.
   3. Permit for transport and disposal of debris.
   4. Selective Demolition Plan.

D. Quality assurance submittals:
   1. Qualifications of non-destructive testing agency/agencies.

E. Project record documents.

F. Drawings and/or other media documenting locations of service lines and capped utilities.

## 1.06 QUALITY ASSURANCE

A. Qualifications:
   1. Assign relocation, removal, cutting, coring and patching to trades and workers qualified to perform the Work in manner that causes the least damage and that provides means of returning surfaces to an appearance at least equal to that of the surrounding areas unaffected by the Work.
   2. Non-destructive testing agencies: Minimum of 5 years' experience performing non-destructive testing for location of steel reinforcement in existing concrete under conditions similar to that required for this Work.

## 1.07 SEQUENCING

A. Perform Work in sequences and within times specified in Section 01140, Work Restrictions.

B. If the facility or utility to be modified cannot be removed from service, perform the Work while the facility is in operation using procedures and equipment that do not jeopardize operation or materially reduce the efficiency of that facility.

C. Coordinate the Work with operation of the facility:
   1. Do not begin alterations of designated portions of the Work until specific permission for activities in each area has been granted by Owner in writing.

2. Engineer will coordinate the planned procedure with facility manager.
3. Complete Work as quickly and with as little delay as possible.

D. Operational functions of the facility that are required to be performed to facilitate the Work will be performed by facility personnel only.

E. Owner will cooperate in every way practicable to assist in expediting the Work.

F. When necessary for the proper operation or maintenance of portions of the facility, reschedule operations so the Work will not conflict with required operations or maintenance.

## 1.08 REGULATORY REQUIREMENTS

A. Dispose of debris in accordance with governing regulatory agencies.

B. Comply with applicable air pollution control regulations.

C. Obtain permits for building demolition, transportation of debris to disposal site and dust control.

## 1.09 PREPARATION

A. Non-destructive evaluation of existing concrete and masonry:
1. Prior to cutting, drilling, coring, and/or any other procedure that penetrates existing concrete or masonry, retain and pay for the services of a qualified non-destructive testing agency to perform investigations to determine the location of existing steel reinforcement, plumbing, conduit, and/or other embedments in the concrete.
2. Submit documentation of the investigations to the Engineer for review and approval as specified in Section 01330, Submittal Procedures, before any work involving penetration of existing concrete is initiated.

B. Obtain permission from adjacent property owners when outriggers, swinging cranes, and other equipment may have to traverse or extend into adjacent property.

## 1.10 PROJECT CONDITIONS

A. Do not interfere with use of adjacent structures and elements of the facility not subject to the Work described in this Section. Maintain free and safe passage to and from such facilities.

B. Provide erect and maintain barricades, lighting, guardrails, and protective devices as required to protect building occupants, general public, workers, and adjoining property:
1. Do not close or obstruct roadways without permits.
2. Conduct operations with minimum interference to public or private roadways.

C. Prevent movement, settlement, or collapse of structures adjacent services, sidewalks, driveways and trees:
1. Provide and place bracing or shoring.

2. Cease operations and notify Engineer immediately when safety of structures appears to be endangered. Take precautions to properly support structure. Do not resume operations until safety is restored.
3. Assume liability for movement, settlement, or collapse. Promptly repair damage.

D. Arrange and pay for capping and plugging utility services. Disconnect and stub off:
1. Notify affected utility company in advance and obtain approval before starting demolition.
2. Place markers to indicate location of disconnected services.

E. Unknown conditions:
1. The drawings may not represent all conditions at the site and adjoining areas. Compare actual conditions with drawings before commencement of Work.
2. Existing utilities and drainage systems below grade are located from existing documents and from surface facilities such as manholes, valve boxes, area drains, and other surface fixtures.
3. If existing active services encountered are not indicated or otherwise made known to the Contractor and interfere with the permanent facilities under construction, notify the Engineer in writing, requesting instructions on their disposition. Take immediate steps to ensure that the service provided is not interrupted, and do not proceed with the Work until written instructions are received from the Engineer.

## PART 2 PRODUCTS

### 2.01 SALVAGE MATERIALS

A. Salvage materials: Materials removed from existing facility.

B. <u>Materials designated for salvage:</u>

1. <u>District staff will clearly mark all items to be salvaged prior to demo. Contractor shall verify all items to be salvaged prior to commencing work.</u>

2. All other items designated on the Drawings to be salvaged or provided to the Owner.

C. Handling and storage:
1. Prevent damage to salvaged materials during removal, handling, and transportation of salvaged materials.
2. Coordinate with Owner for receipt of salvaged materials at least 3 weeks in advance.
3. Transport salvaged materials to the Owner’s treatment plant site or other storage location within the City of Sausalito designated by the Owner.

D. Pay costs associated with salvaging materials, including handling and transporting.

## PART 3 EXECUTION

### 3.01 EXAMINATION

A. Prior to beginning selective demolition operations, perform a thorough inspection of the facility and site, and report to the Engineer defects and structural damage to or deterioration of existing construction to remain.

B. Examine areas affected by the Work and verify the following conditions prior to commencing demolition:
   1. Disconnection of utilities as required.
   2. That utilities serving occupied or active portions of surrounding facilities will not be disturbed, except as otherwise indicated.

C. If unsatisfactory conditions exist, notify the Engineer, and do not begin demolition operations until such conditions have been corrected.

### 3.02 PREPARATION

A. Selective Demolition Plan:
   1. Prepare and submit a comprehensive selective demolition plan for the Work. Describe, at a minimum, the following elements:
      a. Proposed sequence, methods, temporary support, and equipment for demolition, removal, and disposal of portions of structure(s).
      b. Provisions and procedures for salvage and delivery to Owner of salvaged items, if required.
   2. Plan shall be signed and sealed by a Professional Engineer registered in the state where Project is located.
   3. Submit plan a minimum 4 weeks before demolition is scheduled to begin.

B. Protection:
   1. Erect weatherproof closures to protect the interior of facilities and elements or equipment that are not designed for exposure to the weather. Provide temporary heat, cooling, and humidity control as necessary to prevent damage to existing and new construction. Maintain existing exiting paths and/or provide new paths in compliance with Building Code requirements.
   2. Erect and maintain dustproof partitions as required to prevent spread of dust, to other parts of building. Maintain negative pressure in the area where the Work is being performed to prevent the accidental spread of dust and to minimize the spread of fumes related to the Work.
   3. Upon completion of Work, remove weatherproof closures and dustproof partitions, and repair damaged surfaces to match adjacent surfaces.
   4. Provide and maintain protective devices to prevent injury from falling objects.
   5. Locate guardrails in stairwells and around open shafts to protect workers. Post clearly visible warning signs.
   6. Cause as little inconvenience to adjacent building areas as possible.
   7. Protect landscaping, benchmarks, and existing construction to remain from damage or displacement.
   8. Carefully remove designated materials and equipment to be salvaged by Owner or reinstalled.
   9. Store and protect materials and equipment to be reinstalled.

C. Layout:
   1. The limits of selective demolition are indicated on the Drawings. Confine demolition operations within the limits indicated on the Drawings.
   2. Lay out demolition and removal work at the site and coordinate with related Work for which demolition and removal is required. Clearly mark the extent of structural elements to be removed on the actual surfaces that will be removed.
   3. Arrange for Engineer's inspection of the lay out extents.
   4. Do not begin demolition/removal operations until the lay out markings have been reviewed by the Engineer.

## 3.03 DEMOLITION

A. General:
   1. Perform demolition work in accordance with ANSI A10.6.
   2. Demolish designated portions of structures and appurtenances in orderly and careful manner in accordance with the Selective Demolition Plan.
   3. Conduct demolition and removal work in a manner that will minimize dust and flying particles:
      a. Use water or dust palliative when necessary to prevent airborne dust.
      b. Provide and maintain hoses and connections to water main or hydrant.
   4. Demolish concrete and masonry in small sections. Perform demolition with small tools as much as possible. Blasting with explosive charges is not permitted.
   5. Sawcut concrete to establish the edges of demolition, wherever possible:
      a. Do not use a concrete breaker within 6 inches of reinforcing or structural metals that are designated to remain.
      b. At edges that are not sawcut, remove the final 6 inches of material with a chipping hammer as defined herein. At surfaces where material is removed with a chipping hammer, follow with a heavy abrasive blast to remove all loose material and microcracking.
      c. Alternate techniques to remove concrete may be used if acceptable to the Engineer; however, techniques other than those deemed by ICRI Guideline No. 310.2R to provide a low risk of introducing microcracking will require a subsequent procedure to remove loose material.

B. Remove tanks and service piping from site.

C. Immediately upon discovery, remove and dispose of contaminated, vermin-infested, or dangerous materials using safe means that will not endanger health of workers and public.

D. Remove trees and shrubs within marked areas; clear undergrowth and dead plant material as necessary.

E. Backfill open pits and holes caused by demolition.

F. Rough grade areas affected by demolition.

G. Remove demolished materials, tools, and equipment upon completion of demolition.

## 3.04 RESTORATION

A. General:
   1. Repair damage caused by demolition to a conditions equal to those that existing prior to beginning of demolition:
      a. Patch and replace portions of existing finished surfaces that are damaged, lifted, and discolored with matching material. Refinish patched portion surfaces in a manner which produces uniform color and texture to entire surface.
      b. When existing finish cannot be matched, refinish entire surface to nearest change of plane where angle of change exceeds 45 degrees.
   2. The cost of repairs shall be at the Contractor's expense at no increase in the Contract Price.
   3. When new construction abuts or finishes flush with existing construction, make smooth transitions. Match finish of existing construction.
   4. Where partitions are removed, patch floors, walls, and ceilings with finish materials that match existing materials.
   5. Where removal of partitions results in adjacent spaces becoming one, rework floors, walls, and ceilings to provide smooth planes without breaks, steps, or bulkheads.
   6. Where changes of plane exceed 2 inches, request instructions for making transition.
   7. Trim and refinish existing doors as necessary to clear new floors.
   8. Match patched construction with adjacent construction in texture and appearance so that patch or transition is invisible at 5-foot distance.
   9. When finished surfaces are cut so that smooth transition is impossible, terminate existing surface in neat manner along straight line at natural line of division and provide appropriate trim.

B. Restore existing concrete reinforcement as follows:
   1. Where existing reinforcement is to be incorporated into the new Work, protect, clean, and extend into new concrete.
   2. Where existing reinforcement is not to be retained, cut off as follows:
      a. Where new concrete joins existing concrete at the removal line, cut reinforcement flush with concrete surface at the removal line.
      b. Where concrete surface at the removal line will become the finished surface, cut reinforcement 2 inches below the surface, paint ends with epoxy, and patch holes with dry pack mortar.

C. Restore areas affected by removal of existing equipment, equipment pads and bases, piping, supports, electrical panels, electric devices, and conduits such that little or no evidence of the previous installation remains:
   1. Fill areas in existing floors, walls, and ceilings from removed piping, conduit, and fasteners with non-shrink grout and finish smooth.
   2. Remove concrete bases for equipment and supports by:
      a. Saw cutting clean, straight lines with a depth equal to the concrete cover over reinforcement minus 1/2 inch below finished surface:
         1) Do not cut existing reinforcement on floors.
      b. Chip concrete within scored lines and cut exposed reinforcing steel and anchor bolts.
      c. Patch with non-shrink grout to match adjacent grade and finish.
   3. Terminate abandoned piping and conduits with blind flanges, caps, or plugs.

## 3.05 FIELD QUALITY CONTROL

A. Do not proceed with demolition without Engineer's inspection of lay out.

B. Do not deviate from the submitted demolition plan without notifying the Engineer prior to Work.

END OF SECTION

# SECTION 01745

# SPARE PARTS, SPECIAL TOOLS AND MAINTENANCE MATERIALS

## PART 1 GENERAL

### 1.01 SECTION INCLUDES

A. Spare parts, keys, special tools, maintenance materials and test equipment.

### 1.02 RELATED SECTIONS

A. Coordinate the work of this Section with the work specified in individual equipment technical specification sections and Section 01782 - Operation and Maintenance Data, for lists of spare parts.

B. Include operation and maintenance of special tools and test equipment in Operation and Maintenance Data Manuals.

C. Section 01600 - Product Requirements.

D. Section 01756 – Facility Start-up.

### 1.03 SUBMITTALS

A. General: Refer to Section 01330 - Submittal Procedures, for submittal requirements and procedures.

B. Spare Parts Lists:
   1. No later than 120 days after Contractor’s receipt of Notice to Proceed, prepare and submit a complete list of recommended spare parts for all equipment, appliances, and systems as specified in the various individual Sections of the Contract Specifications, as applicable.
   2. The Spare Parts List shall include all spare parts as required to provide for the maintenance and repairs of all Contractor-furnished equipment and appliances for a period of two years after the date of the Acceptance of the Work.
   3. The Spare Parts List shall be organized in accordance with the Contract Documents, by Section number and title:
      a. The Spare Parts List shall include the part's generic name or description, its trade name, Contractor's part number, manufacturer's name, manufacturer's part number, retail price, quantity, and correlation with the pertinent Contract Specifications, Contract Drawings, and Operation and Maintenance Manuals specified in Section 01782, Operation and Maintenance Data.
      b. Spare parts shall be grouped by equipment category. Replacement parts common to more than one category shall be cross-referenced and indexed. Such common parts shall have only one part number.

C. Maintenance Materials List:
   1. Prepare and submit a complete list of maintenance materials as specified in the various individual Sections of the Contract Specifications.

2. The Maintenance Materials List shall be organized in accordance with the Contract Documents, by Section number and title. Include the quantities to be furnished.
3. Where maintenance materials are specified as a percentage of the materials installed, such percentages shall be translated to actual quantities of materials in the Maintenance Materials List.

D. Keys, Special Tools, and Test Equipment List:
1. Prepare and submit a complete list of the keys, special tools, and test equipment as specified in the various individual Sections of the Contract Specifications.
2. The Keys, Special Tools, and Test Equipment List shall be organized in accordance with the Contract Documents, by Section number and title.

## 1.04 SPARE PARTS

A. Requirements:
1. Provide specific spare parts as specified in the individual Sections of the Contract Specifications. Spare parts furnished to the District as required in the detailed specification sections shall be in addition to those spare parts as required by the Contractor for the testing, starting and adjustment of equipment as specified in Section 01756, Facility Start-up.
2. Contractor shall provide for each item of mechanical, electrical, and instrumentation equipment a supply of spare parts and special tools required for the testing, starting, and adjusting of equipment, including but not limited to, functional testing, operational testing, and performance testing of completed portions of the work and as a completed facility as specified in Section 01756, Facility Start-up.
3. The Contractor shall be responsible to have on hand sufficient spare parts and special tools to meet his/her start-up and testing schedule and contract completion schedule.
4. Spare parts shall be identical to the parts installed in the Work.
5. Spare parts and special tools will not be provided by the District.

B. Quantities: Provide quantities based on reliability requirements, replacement lead time, the Contractor's recommendations, and the following requirements:
1. Wear: Provide spare parts for components which may be expected to require regular replacement under normal maintenance schedules, such as mechanical parts subject to continuous operation.
2. Consumability: Provide spare parts for components with a life-expectancy of less than 5 years.
3. One-Time Limited Service: Provide spare parts which normally require replacement after performing their function one time, such as fuses.
4. Long Lead Time: Provide spare parts for components which are not readily available from distributors, such as for custom-fabricated components.
5. Exchange Assemblies: Provide assemblies which will be exchanged with malfunctioning units for installed equipment, and which must be inventoried as complete assemblies.

## 1.05 MAINTENANCE MATERIALS

A. Requirements:
   1. Provide maintenance materials as specified in the individual Sections of the Contract Specifications.
   2. Maintenance materials shall be identical to the materials installed in the Work.

B. Quantities: Provide quantities of materials as specified in the individual Sections of the Contract Specifications.

## 1.06 KEYS, SPECIAL TOOLS, AND TEST EQUIPMENT

A. Requirements: Provide sufficient keys, special tools and wrenches, and special test equipment and gages as required to access, start, maintain, and repair all the installed equipment, appliances, systems, and assemblies.

B. Quantities: Provide quantities of keys, special tools, and test equipment as specified in the individual Sections of the Contract Specifications.

## 1.07 BAR CODE

A. All spare parts with the manufacturer's or supplier's serial number or other identification shall also be identified with bar codes, coded in accordance with the District's Bar Coding System (AIAG Auto Industry Code 39) or equivalent. The System details will be provided by the Construction Manager.

## 1.08 PACKAGING

A. Comply with applicable requirements found in Section 01605, Delivery, Storage and Handling. All spare parts, maintenance materials, keys, special tools, and test equipment shall be securely packaged in boxes, with the boxes clearly labeled as to the contents. Such labeling shall include: location and description of the equipment and the item, complete listing of all items in the box, and the quantity of each item included in the box.

## 1.09 DELIVERY

A. Deliver spare parts, maintenance materials, keys, special tools, and test equipment to the warehouse location or locations specified in the Contract Documents. Provide unloading service at the designated storage location for all delivered products.

B. Prepare formal receipts for all such delivered products, and have them signed by the authorized District Representative at the location. A copy of all such receipts shall be submitted to the Construction Manager for information and record.

## 1.10 STORAGE

A. Spare parts, maintenance materials, keys, special tools, and test equipment may be stored temporarily at the Site of the Work in suitable storage facilities until time to deliver these products to the locations designated in the Contract Documents. Any such storage shall comply with the requirements specified in Section 01605, Delivery, Storage and Handling.

## PART 2 PRODUCTS

Not Used.

## PART 3 EXECUTION

Not Used.

END OF SECTION

# SECTION 01756

# FACILITY STARTUP

## PART 1 GENERAL

### 1.01 DEFINITIONS

A. Facility Startup: Includes putting Project in operating order, cleaning, adjusting and balancing equipment, initial operation (startup) of equipment item, operating equipment, starting systems, operation of systems, testing of equipment and systems, and demonstration and verification of the completed facility as a unit.

B. Functional Test: A test or tests in the presence of the District's Representative to demonstrate that the installed equipment or system meets manufacturer's installation and performance requirements and other requirements specified including, but not limited to, pressure testing, leak testing, vibration testing, and proper mechanical connections and operability for all valves and appurtenances.

C. Operation Period: The operation period begins when the facility has been successfully started up as defined under Paragraph Startup Test Period and has met all Substantial Completion requirements.

D. Performance Test: A test performed in the presence of the District and after any required functional test specified, to demonstrate and confirm that the equipment and/or system meets the specified performance requirements.

E. Significant Interruption: May include any of the following events:
   1. Failure of Contractor to maintain qualified onsite startup personnel as scheduled.
   2. Failure to meet specified performance for more than 2 consecutive hours.
   3. Failure of any critical equipment unit, system, or subsystem that is not satisfactorily corrected within 5 hours after failure.
   4. Failure of noncritical unit, system, or subsystem that is not satisfactorily corrected within 8 hours after failure.
   5. As may be determined by District.

F. Startup Test Period:
   1. Startup of the entire facility or any portion thereof includes coordinated operation of the facilities by the Contractor, Subcontractors, District operating personnel, and Supplier or manufacturer's representatives for equipment items and systems after all required functional tests have been completed and those performance tests deemed necessary for the safe operation of the entire facility have been completed.

2. Startup of the entire facility or any portion thereof shall be considered complete when, in the opinion of the District, the facility or designated portion has operated in the manner intended for five (5) continuous days without significant interruption. This period is in addition to any training, functional, or performance test periods specified elsewhere. A significant interruption will require the startup then in progress to be stopped and restarted after corrections are made.

G. System: The overall process, or a portion thereof, that performs a specific function. A system may consist of two or more subsystems as well as two or more types of equipment.

## 1.02 SUBMITTALS

A. Administrative Submittals:
1. Functional and performance test schedules and plan for equipment, units, and systems at least fourteen (14) days prior to start of related testing. Include test plan and procedures.
2. Schedule and plan of facility startup activities at least fourteen (14) days prior to commencement.

B. Quality Control Submittals:
1. Manufacturer's Certificate of Proper Installation as required.
2. Test Reports: Functional and performance testing, in format acceptable to District and certification of functional and performance test for each piece of equipment or system specified.
3. Operation and maintenance data as required.
4. Certifications of Calibration: Testing equipment including vibration test equipment.

## 1.03 FACILITY STARTUP; CONTRACTOR RESPONSIBILITIES

A. General:
1. Perform Work for tests specified, including items furnished by District.
2. Demonstrate proper installation, adjustment, function, performance, and operation of equipment, systems, control devices, and required interfaces individually and in conjunction with existing system.
3. Provide water, power, chemicals, and other items as required for testing, unless otherwise indicated.

## 1.04 FACILITY STARTUP; DISTRICT'S RESPONSIBILITIES

A. General:
1. Review Contractor's test plan and schedule.
2. Witness each functional or performance test.
3. Coordinate other plant operations, if necessary, to facilitate Contractor's tests.
4. Provide reclaimed water, as available.

B. Startup Test Period: Operate process units and devices, with support of Contractor.

## PART 2 PRODUCTS

Not Used

## PART 3 EXECUTION

### 3.01 TESTING PREPARATION

A. General:
   1. Complete Work associated with the unit and related processes before testing, including related manufacturer's representative services.
   2. Provide related operating and maintenance manuals, and spare parts and special tools as specified before testing any unit or system. **These manuals shall be provided two weeks in advance of any on site testing.**
   3. Furnish qualified manufacturer's representatives when required to assist in testing.
   4. Schedule and attend pretest (functional and performance) meetings related to test schedule; plan of test; materials, chemicals, and liquids required; facilities' operations interface; and District involvement.
   5. Designate and provide one or more persons to be responsible for coordinating and expediting Contractor's facility startup duties. The person or persons shall be present during facility startup meetings and shall be available at all times during the facility startup period.
   6. Provide temporary valves, gauges, piping, test equipment and other materials and equipment required to conduct testing.

B. Cleaning and Checking: Prior to starting functional testing:
   1. Calibrate testing equipment for accurate results.
   2. Inspect and clean equipment, devices, connected piping, and structures so they are free of foreign material.
   3. Lubricate equipment in accordance with manufacturer's instructions.
   4. Turn rotating equipment by hand and check motor-driven equipment for correct rotation.
   5. Open and close switches by hand and operate other devices to check for binding, interference, or improper functioning.
   6. Check power supply to electric-powered equipment for correct voltage.
   7. Adjust clearances and torques.
   8. Test piping for leaks.

C. Ready-to-test determination will be by District, based at least on the following:
   1. Notification by Contractor of equipment and system readiness for testing.
   2. Acceptable testing plan.
   3. Acceptable operation and maintenance manuals incorporating review comments.
   4. Adequate completion of Work adjacent to, or interfacing with, equipment to be tested, including items to be furnished by District.
   5. Availability and acceptability of supplier or manufacturer's representative, when specified, to assist in testing of respective equipment, and satisfactory fulfillment of other specified manufacturers' responsibilities.
   6. All spare parts and special tools delivered to District.

## 3.02 FUNCTIONAL TESTING

A. General:
   1. Begin testing at a time mutually agreed upon by the District, Supplier, manufacturer's representative(s), and Contractor.
   2. Notify in writing District, and Supplier or manufacturer's representative at least five (5) working days prior to scheduled date of functional tests.
   3. Separate items of equipment demonstrated to function properly during subsystem testing may require no further functional test if documentation of subsystem testing is acceptable to District.
   4. Conduct functional test until each individual component item or system has achieved three (3) continuous hours of satisfactory operation. Demonstrate all operational features and controls function during this period while in automatic modes.
   5. If, in District's opinion, each system meets the functional requirements specified, such system will be accepted as conforming for purposes of advancing to performance testing phase, if required. If, in District's opinion, functional test results do not meet requirements specified, the systems will be considered as nonconforming.
   6. Performance testing shall not commence until the equipment or system meets functional tests specified.

## 3.03 PERFORMANCE TESTING

A. General:
   1. Begin testing at time mutually agreed upon by the District, Supplier, manufacturers' representative(s), and Contractor, as appropriate.
      a. District will be present during test.
      b. Notify District at least five (5) working days prior to scheduled date of test.
   2. Follow approved testing plan and detailed procedures specified.
   3. Source and type of fluid, gas, or solid for testing shall be as specified.
   4. Unless otherwise indicated, provide all labor, materials, and supplies for conducting the test and taking all samples and performance measurements.
   5. Prepare performance test report summarizing test method. Include test logs, pertinent calculations, and certification of performance.

## 3.04 STARTUP TEST PERIOD

A. Test Reports: As applicable to the equipment furnished, certify in writing that:
   1. Tanks, pumps, piping systems, and valves have been successfully tested and are fully operational.
   2. Equipment systems and subsystems have been checked for proper installation, started, and successfully tested to indicate that they are operational and can perform their intended function.
   3. Systems and subsystems are capable of performing their intended functions.
   4. Facilities are ready for final testing and their intended operation.

B. Attend planning meetings and arrange for attendants by key major equipment supplier or manufacturer representatives and required, or as required by the Contract Documents.

C. Designate and provide one or more persons to be responsible for coordinating and expediting Contractor's facility startup duties.

D. When facility startup has commenced, schedule remaining Work so as not to interfere with or delay the completion of facility startup. Support the facility startup activities with adequate staff to prevent delays and process upsets. This staff shall include, but not be limited to, major equipment and system manufacturers' representatives, Subcontractors, electricians, instrumentation personnel, millwrights, pipefitters and plumbers.

E. Supply and coordinate specified manufacturer's facility startup services, as applicable.

F. Make adjustments, repairs, and corrections necessary to complete facility startup.

G. After the facility is operating, complete the testing of those items of equipment, systems, and subsystems which could not be or were not adequately or successfully tested prior to startup test period.

## 3.05 PARTIAL UTILIZATION

A. After successful performance testing of a particular equipment type or system, District may elect to start up a portion of the equipment or system for continuous operation in accordance with Paragraph 10 of the General Conditions. Such operation will not interfere with testing of other equipment and systems that may still be underway, and shall not preclude the need to startup that portion operated in combination with the rest of the facility when testing is completed.

## 3.06 CONTINUOUS OPERATIONS

A. District will accept equipment and systems as substantially complete and ready for continuous operation only after successful facility startup is completed and documented, and reports submitted, and manufacturers' services completed for training of District's personnel.

END OF SECTION

# SECTION 01770

# CONTRACT CLOSEOUT

## PART 1 GENERAL

### 1.01 SECTION INCLUDES

A. Administrative and procedural requirements for Contract closeout.

### 1.02 REFERENCED SECTIONS

A. The following Sections are referenced in this Section:
   1. General Conditions.
   2. Section 01722– Field Engineering.
   3. Section 01780 – Record Documents.
   4. Section 01782 – Operation and Maintenance Data.

### 1.03 FINAL CLEANING

A. Immediately prior to submittal of a request for inspection for Substantial Completion, clean the project site and make ready for District's use and occupancy.

B. Employ experienced workers or professional cleaners for final cleaning.

C. Use cleaning materials which are recommended by manufacturers of surfaces to be cleaned.

D. Complete the following cleaning operations:
   1. Clean the project site, yard and grounds which were disturbed by construction activities. Remove rubbish, waste material, litter and other foreign material.
   2. Remove all rocks and other non-native materials from agricultural fields used for staging areas and re-grade fields to original or better condition. Employ laser leveling equipment to verify smooth grade free from mounding, depressions, swales or other surface irregularities.
   3. Sweep paved areas, remove oil stains, grease, dust and dirt.
   4. Remove tools, construction equipment, machinery, storage sheds, temporary fences and surplus material.
   5. Broom clean sidewalks and concrete floors.
   6. Vacuum carpets, spot clean or if necessary, shampoo to remove visible soil or stains.
   7. Clean glass in doors and windows, remove glazing compounds, replace chipped and broken glass, clean door and window frames.
   8. Patch, touch up and repair marred surfaces and finishes. Replace finishes and surfaces that cannot be satisfactorily repaired or restored.
   9. Wipe surfaces of mechanical and electrical equipment, remove excess lubrication, paint splatter and mortar droppings.
   10. Clean plumbing fixtures and mirrors.
   11. Clean light fixtures, lamps and bulbs. Replace burned-out bulbs and defective or noisy starters in fluorescent and mercury vapor fixtures.

12. Prevent scratching, discoloring, and otherwise damaging surfaces being cleaned.
13. Clean roofs, gutters, downspouts, and drainage systems. Hydroclean all plant storm drainage piping.
14. Remove dust, cobwebs, and traces of insects and dirt.
15. Clean grease, mastic, adhesives, dust, dirt, stains, fingerprints, paint, blemishes, sealants, plaster, concrete, and other foreign materials from sight-exposed surfaces, and fixtures and equipment.
16. Remove non-permanent protection and labels.
17. Clean permanent filters and replace disposable filters when heating, ventilation, and air conditioning units were operated during construction.
18. Clean ducts, blowers and coils when units were operated without filters during construction.

E. Waste Disposal:
1. Arrange for and dispose of surplus materials, waste products, and debris off-site:
   a. Prior to making disposal on private property, obtain written permission from Owner of such property.
2. Do not fill ditches, washes, or drainage ways which may create drainage problems.
3. Do not create unsightly or unsanitary nuisances during disposal operations.
4. Maintain disposal site in safe condition and good appearance.
5. Complete leveling and cleanup prior to final acceptance of the Work

## 1.04 SUBSTANTIAL COMPLETION

A. General:
1. Comply with procedural requirements for Substantial Completion as specified in the General Conditions.

B. Complete final cleaning operations before requesting inspection for Substantial Completion.

C. Prior to requesting inspection for Substantial Completion, complete and submit the following:
1. List of items to be completed or corrected (punch list). Organize list by facility, space, system and piece of equipment.
2. Specific warranties, bonds, maintenance service agreements, final certifications and similar documents.
3. Delivery of spare parts, special tools, extra materials and similar items to designated locations.
4. Make final changeover of permanent locks and deliver keys to District.

D. Inspection for Substantial Completion:
1. Engineer, District and Contractor shall jointly walk through and inspect the project site to determine whether the Work is satisfactory and Substantially Complete.
2. The Contractor’s punch list will be reviewed and additional items identified during the inspection requiring corrective actions will be added to the list as determined by the inspection.

## 1.05 FINAL COMPLETION

A. Final Completion Submittals:
   1. At least seven (7) days prior to submitting final Application for Payment, complete and submit the following:
      a. Final Project Record Documents. Refer to Section 01780.
      b. Guaranty, Warranties, and Bonds.
      c. Operation and Maintenance Data Information. Refer to Section 01782.
      d. Punch List with all corrective actions completed and ready for Final Inspection.
      e. Releases from Agreements with property owners or public agencies.
      f. Releases or Waivers of Liens and Claims, and Stop Payment Notice as specified in conditions of the Contract.
      g. Evidence of final, continuing insurance coverage complying with insurance requirements.
      h. Consent of Surety to Final Payment.
      i. Keys and keying schedule.
      j. Survey record documents as specified in Section 01722.

B. Final Inspection:
   1. Submit written request for final inspection for Project Acceptance.
   2. Engineer will either proceed with the inspection or advise Contractor of unfulfilled requirements.
   3. Engineer will prepare a final Certificate of Completion after satisfactory inspection of the Work.

## 1.06 FINAL APPLICATION FOR PAYMENT

A. Following a satisfactory Final Inspection and receipt of a final Certificate of Completion from the Engineer, submit the final Application for Payment in accordance with the procedures and requirements specified in the General Conditions.

# PART 2 PRODUCTS

NOT USED

# PART 3 EXECUTION

NOT USED

END OF SECTION

# SECTION 01780

# RECORD DOCUMENTS

## PART 1 GENERAL

### 1.01 SUBMITTALS

A. Quality Control Submittals: Written procedures for maintaining and markup of record documents (As-Builts).

B. Contract Closeout Submittal: Submit Record Documents in accordance with the requirements of this section. Submit prior to application for final payment.

### 1.02 QUALITY ASSURANCE

A. Furnish qualified and experienced person, whose duty and responsibility shall be to maintain record documents.

B. Accuracy of Records:
   1. Coordinate changes within record documents, making legible and accurate entries on each page of Specifications and each sheet of Drawings and other documents where such entry is required to show change.

C. Purpose of Project record documents is to provide factual information regarding aspects of Work, both concealed and visible, to enable future modification of Work to proceed without lengthy and expensive site measurement, investigation, and examination.

D. Make entries within 24 hours after receipt of information that a change in Work has occurred.

E. Prior to submitting each request for progress payment, request District's review and approval of current status of record documents. Failure to properly maintain, update, and submit record documents may result in return of Contractor's Application for Progress Payment by District as provided in Article 10 of the General Conditions.

### 1.03 DELIVERY, STORAGE, AND HANDLING

A. Maintain record documents completely protected from deterioration, loss, and damage until completion of Work. As-Builts must be maintained on-site and available for inspection at all times.

B. In event of loss of recorded data, use means necessary to again secure data to District's acceptance:
   1. Such means shall include, if necessary in District's opinion, removal and reconstruction of covering materials, at no cost to District.

## PART 2 PRODUCTS

### 2.01 RECORD DOCUMENTS

A. Promptly following commencement of Contract Times, secure from District at no cost to Contractor, one complete set of Contract Documents. Drawings will be half size, 11 by 17 inches.

## PART 3 EXECUTION

### 3.01 MAINTENANCE OF RECORD DOCUMENTS

A. General:
   1. Label or stamp each record document with title, "RECORD DOCUMENTS," in neat large printed letters.
   2. Record information concurrently with construction progress and within 24 hours after receipt of information that change has occurred. Do not cover or conceal Work until required information is recorded.

B. Preservation:
   1. Maintain documents in a clean, dry, legible condition and in good order. Do not use record documents for construction purposes.
   2. Make documents and Samples available at all times for observation by District.

C. Making Entries on Drawings:
   1. Using an erasable colored pencil (not ink or indelible pencil), clearly describe change by graphic line and note as required.
      a. Color Coding:
         1) Green when showing information deleted from Drawings.
         2) Red when showing information added to Drawings.
         3) Blue and circled in blue to show notes.
   2. Date entries:
   3. Call attention to entry by "cloud" drawn around area or areas affected.
   4. Legibly mark to record actual changes made during construction, including, but not limited to:
      a. Depths of various elements of foundation in relation to finished first floor data if not shown or where depth differs from that shown.
      b. Horizontal and vertical locations of existing and new Underground Facilities and appurtenances, and other underground structures, equipment or Work. Reference to at least two measurements of permanent surface improvements.
      c. Location of internal utilities and appurtenances concealed in the construction referenced to visible and accessible features of the structure.
      d. Locate existing facilities, piping, equipment, and items critical to the interface between existing physical conditions or construction and new construction.
      e. Changes made by Addenda and Field Orders, Work Change Directive, Change Order, Written Amendment, and District's written interpretation and clarification using consistent symbols for each and showing appropriate document tracking number.

5. Dimensions on Schematic Layouts: Show on record drawings, by dimension, the centerline of each run of items such as are described in previous subparagraph above:
   a. Clearly identify the item by accurate note such as "cast iron drain," galv. Water," and the like.
   b. Show, by symbol or note, vertical location of item ("under slab," "in ceiling plenum, " "exposed," and the like).
   c. Make identification so descriptive that it may be related reliably to Specifications.

D. Make entries in other pertinent documents as accepted by District.

E. If documents are not accepted by District, secure a new copy of that document from District at District's usual charge for reproduction and handling, and carefully transfer change data to new copy to acceptance of District.

END OF SECTION

# SECTION 01782

# OPERATING AND MAINTENANCE DATA

## PART 1 GENERAL

### 1.01 SCOPE OF WORK

A. Compile, organize, submit, and revise, as directed by the Engineer an Operation and Maintenance Manual for each piece of equipment furnished, as required by the Specifications.

B. Compile, organize, submit, and revise, as required, the attached Equipment Manufacturer's Certificate of Installation Testing and Instruction for acknowledgement by the District.

### 1.02 CONTENT OF MANUAL

A. Each manual shall be specific to this Contract. All non-applicable information shall be crossed out, and the applicable information shall be highlighted or otherwise indicated in a manner to prevent confusion of those utilizing the manuals.

B. Each manual shall contain the following information:
   1. Neatly typewritten Title Page/Cover Sheet to include:
      a. Identification of equipment covered by the manual by providing the process name and equipment tag numbers.
      b. Name of responsible principal, address, telephone number and area of responsibility of:
         1) Contractor.
         2) Subcontractor or installer.
         3) Product manufacturer.
         4) Nearest service center or maintenance contract or, as appropriate.
         5) Nearest source of supply for parts, materials, supplies or replacement products.
   2. Neatly typewritten Table of Contents sheet to include the following manual section headings:
      a. System and Component Description.
      b. Maintenance Schedule.
      c. Installation Instructions.
      d. Operation Procedures.
      e. Maintenance Instructions.
      f. Troubleshooting Guide.
      g. Drawings and Spare Parts Lists.
      h. Technical Data.
      i. Other Components.
      j. Warranties, Bonds and Service Contracts.
   3. Manual sections shall be manufacturer's original printed information or neatly typewritten pages. Each section shall be tabbed in consecutive order such that the first tab will be Table of Contents.

## 1.03 MANUALS FOR ELECTRICAL AND ELECTRONIC EQUIPMENT

A. In addition to the required content as listed in Paragraph 1.02, manuals for electric and electronic equipment shall include:
   1. Circuit directories of panelboards.
      a. Electrical service.
      b. Controls and control loops.
      c. Communications.
   2. As-installed color coded wiring diagrams.
   3. Refer to Division 16 for further requirements.

## 1.04 MANUALS FOR MATERIALS AND FINISHES

A. Submit two copies of complete manuals for applied materials, finishes, moisture protection and weather-exposed products in final form only.

B. Content:
   1. Manufacturer's data, giving full information on product.
   2. Instructions for care and maintenance.
   3. Additional pertinent information as required by the respective Specification sections for the products.

## 1.05 SUBMITTAL SCHEDULE

A. Manuals shall be submitted according to the following schedule:
   1. Submit three preliminary copies of manuals to the District prior to equipment delivery and no later than 30 days following approval of the shop drawings for each piece of equipment. Engineer will review and return one copy with comments.
   2. Submit three revised copies of manuals to the District, incorporating comments and revisions required by the District and/or Engineer 30 days after initial receipt of the reviewed preliminary manuals and comments from the Engineer. When manufacturer training is required for the subject equipment/system, the training shall not occur until after the revised copies have been approved by the Engineer. These revised copies shall be the source document for such training.
   3. Submit seven final copies of the manuals to the District, identical to the revised copies as approved by the Engineer, within 60 days of initial receipt of the approved revised copies from the Engineer, or prior to issuance of a certificate of substantial completion, whichever is earlier. The seven final copies shall be submitted in binders, as detailed in Paragraph 1.06.

## 1.06 FORM OF MANUAL SUBMITTALS

A. Format:
   1. Printed and typewritten sheets shall be standard 8-1/2 inch X 11 inch size.
   2. Paper shall be 20 pound minimum, white, with standard three hole punch pattern, with punched edges of each sheet of final submittals reinforced with plastic, cloth or metal.
   3. All text shall be manufacturer's original printed sheets or neatly typewritten pages.
   4. Sections shall be separated with tabbed index sheets to correlate with the Table of Contents of the manual.

5. Drawings that are standard 8-1/2 inch x 11 inch size shall also have standard three hole punch pattern with punched edges of each sheet of final submittals reinforced with plastic, cloth or metal. Drawings larger than standard 8-1/2 inch X 11 inch size shall be folded and inserted into standard three hole punch pattern, 8-1/2 inch X 11 inch size, 0.0035 gauge standard pocket plastic sheet protectors.
6. All diagrams, drawings and illustrations shall be of original quality, reproducible by the dry copy method.

B. Binding:
1. Preliminary and revised manual submittals.
   a. Commercial quality three ring binders:
      1) Cleanable, oil, moisture and wear resistant, vinyl sealed stiff board covers with full size clear plastic/vinyl pockets on front and spine.
      2) Ring size to suit thickness of manual content.
2. Final manual submittals.
   a. Four copies shall be bound in uniform three ring binders as detailed in Paragraph 1.06.B. 1.
   b. Submit an electronic version of the entire O&M manual on CDs using PDF format, with bookmarks for each piece of equipment included.

## 1.07 INSTRUCTION OF DISTRICT PERSONNEL

A. Before final inspection, instruct District’s designated personnel in operation, adjustment and maintenance of products, equipment and systems, at agreed upon times.

B. Use operation and maintenance manuals as basis for instruction. Review contents of manual with personnel in detail to explain all aspects of operation and maintenance.

C. Prepare and insert additional data in Operation and Maintenance Manual when need for such data becomes apparent during instruction.

## 1.08 SERVICES OF MANUFACTURER’S REPRESENTATIVE

A. Equipment furnished under Divisions 11, 13, 15 and 16 shall include the cost of a competent representative of the manufacturers of all equipment to supervise the installation, adjustment and testing of the equipment and to instruct the District's operating personnel on operation and maintenance. This supervision may be divided into two or more time periods as required by the installation program or as directed by the Engineer.

B. See the detailed specifications for additional requirements for furnishing the services of manufacturer's representatives.

C. A certificate in the form attached to this Section, from the manufacturer and signed by District's representative stating that the installation of the equipment is satisfactory, that the unit has been satisfactorily tested, is ready for operation and that the operating personnel have been suitably instructed in the operation, lubrication and care of the unit shall be submitted for each piece of equipment furnished on the project.

EQUIPMENT MANUFACTURER'S CERTIFICATE OF INSTALLATION TESTING AND INSTRUCTION

Owner: _____

Project: _____

Contract No. _____

EQUIPMENT SPECIFICATION SECTION_____

EQUIPMENT DESCRIPTION_____

I_____ , Authorized representative of
(Print Name)

_____
(Print Manufacturer's Name)

hereby CERTIFY that_____
(Print equipment name and model with serial No.)

installed for the subject project [has] [have] been installed in a satisfactory manner, [has] [have] been satisfactorily tested, [is] [are] ready for operation, and that Owner assigned operating personnel have been suitably instructed in the operation, lubrication, and care of the unit[s] on Date: _____ Time: _____.

CERTIFIED BY: _____ DATE: _____
(Signature of Manufacturer's Representative)

OWNER'S ACKNOWLEDGMENT OF MANUFACTURER'S INSTRUCTION

[I] [We] the undersigned, authorized representatives of the _____ and/or Plant Operating Personnel have received classroom and hands on instruction on the operation, lubrication, and maintenance of the subject equipment and [am] [are] prepared to assume normal operational responsibility for the equipment:

_____ DATE: _____

_____ DATE: _____

_____ DATE: _____

Form Completed By: _____
Date: _____

| EQUIPMENT NAMEPLATE DATA RECORD | |
|---|---|
| Asset No.: | Location: |
| Asset Name: | Description: |
| Supplier Name: | Address/Phone/Contact: |
| **PUMP** | |
| Manufacturer Name: | Address/Phone/Contact: |
| Description: | |
| Output: | TDH: Model No.: Serial No.: |
| Size: | RPM: Type: |
| Installed Date: | Impeller Data: |
| Project No.: | Purchase Cost: Vendor: |
| Remarks: | |
| **MOTOR** | |
| Manufacturer Name: | Address/Phone/Contact |
| Model No.: | Serial No.: |
| RPM: Volts: | H.P.: Ph: |
| Amps: Hz: | EFF/SF: Code: |
| Frame: Type: | Insul Class: |
| Design: | Duty: |
| Remarks: | |
| **COMPONENT** | |
| Manufacturer Name: | Address/Phone/Contact |
| Model No.: | Serial No.: |
| Remarks/Specifications: | |
| **GENERIC** | |
| Manufacturer Name: | Address/Phone/Contact: |
| Remarks/Specifications: | |

END OF DOCUMENT

# SECTION 01785

# WARRANTIES AND BONDS

## PART 1 GENERAL

### 1.01 GUARANTEE OF WORK

A. The Contractor hereby agrees to make, at its own expense, all repairs or replacements necessitated by defects in materials or workmanship, supplied under terms of this Contract, and pay for any damage to other works resulting from such defects, which becomes evident within one (1) year after the date of acceptance of the project or the Substantial Completion date whichever is applicable or within such longer period of time as may be prescribed by law or by the terms of any applicable special guarantee required by the Contract Documents. The Contractor further assumes responsibility for a similar guarantee for all work and materials provided by subcontractors or manufacturers of packaged equipment components. The Contractor also agrees to indemnify, defend, and hold the District harmless from liability of any kind arising from damage due to said defects.

B. The Contractor shall execute and submit a completed Warranty Form in the format as appended to this section for the Work, and any portion of the Work possessed in accordance with Paragraph 00700-3.04, District's Right to Use or Occupy. The Warranty Form shall be submitted prior to the Substantial Completion date or the final acceptance of the project or within five (5) days of the occupancy or use of a portion of the Work, whichever is applicable. In addition, the Contractor shall submit the other specified additional warranties, guarantees, and bonds from manufacturers and suppliers.

C. The Contractor shall, upon the receipt of notice in writing from the District, promptly make all repairs arising out of defective materials, workmanship, or equipment. The District is hereby authorized to make such repairs, and the Contractor and its Surety shall be liable for the cost thereof, if ten (10) days after giving of such notice to the Contractor, the Contractor has failed to make or undertake the repairs with due diligence. In case of emergency, where in the opinion of the District delay could cause serious loss or damage, repairs may be made without notice being sent to the Contractor, and the expense in connection therewith shall be charged to the Contractor, and its Surety shall be liable for the cost thereof.

D. Prior to the expiration of the Warranty period, the District reserves the right to hold a meeting and require the attendance of the Contractor. The purpose of the meeting is to review warranties, bonds, and maintenance requirements and determine required repair or replacement of defective items.

E. For the purpose of this paragraph, acceptance of the Work or a portion of the Work by the District, shall not extinguish any covenant or agreement on the part of the Contractor to be performed or fulfilled under this Contract which has not, in fact, been performed or fulfilled at the time of such acceptance. All covenants and agreements shall continue to be binding on the Contractor until they have been fulfilled.

F. The District and the Contractor agree that warranty on the parts of the work possessed and used by the District in accordance with Paragraph 00700-3.04, District's Right to Use or Occupy, shall commence on the date that the District takes possession of such work and so notifies the Contractor in writing. The District and the Contractor further agree that such possession, and use of the work shall not be deemed as Substantial Completion or acceptance of any other part of the Work.

G. If, after installation, the operation or use of the materials or equipment furnished under this Contract proves to be unsatisfactory to the Construction Manager or District, the District shall have the right to operate and use such materials or equipment until it can, without damage to the District, be taken out of service for correction or replacement. Such period of use of the defective materials or equipment pending correction or replacement shall in no way decrease the guarantee period required for the acceptable corrected or replaced items of materials or equipment.

H. Nothing in this Section shall be construed to limit, relieve or release the Contractor's, subcontractor's and equipment supplier's liability to the District for damages sustained as the result of latent defects in the equipment furnished caused by the negligence of the supplier's agents, employees or subcontractors. Stated in another manner, the warranty contained in this Section shall not amount to nor shall it be deemed to be a waiver by the District of any rights or remedies (or time limits in which to enforce such rights or remedies) it may have against the supplier of the equipment to be furnished under these Specifications for defective workmanship or defective materials under the laws of this State pertaining to acts of negligence.

## PART 2 PRODUCTS

Not Used.

## PART 3 EXECUTION

Not Used.

**WARRANTY FORM**

**Warranty For**

**District**

**(Project/Component)**

We hereby guarantee the (Project/Component) that we have constructed for a period of one (1) year from (Date) the date of acceptance of the work/substantial completion by the Sausalito-Marin City Sanitary District.

The following are excluded from the provisions of this warranty:

We agree that if any of the equipment should fail due to any reason other than improper maintenance or improper operation, if any pipe or appurtenances should develop leakage, or if any settlement of fill or backfill occurs, or should any portion of the work fail to fulfill any of the requirements of the Specifications, we will, within ten days after written notice of such defects, commence to repair or replace the same together with any other work which may be damaged or displaced in so doing.

In the event of our failure to comply with the above with the above mentioned conditions within a reasonable time after being notified, or should the exigencies of the case require repairs or replacements to be made before we can be notified or respond to notification, we do hereby authorize the Sausalito-Marin City Sanitary District to proceed to have the defect repaired and made good at our expense, and we will pay the cost therefor upon demand.

The warranty provided herein shall not be in lieu of, but shall be in addition to any warranties or other obligations otherwise imposed by the Contract Documents and by law.

Contractor:_____

Signed:_____

Titled:_____

Date:_____

END OF SECTION

**SECTION 01999**

**REFERENCE FORMS**

The forms listed below and included in this Section are to assist in meeting the requirements of the Contract Documents. Contractor may submit equivalent forms for Owner's approval prior to use. If Owner does not approve substitute form, Contractor must use forms found in this Section. Owner will provide Contractor electronic files of prescribed forms upon request.

| Form No. | Title of Form |
|---|---|
| 1 | CAD WAIVER |
| 2 | CONTRACTOR'S DAILY REPORT |
| 3 | CONTRACTOR'S APPLICATION AND CERTIFICATE FOR PAYMENT |
| 4 | SYSTEM OUTAGE REQUEST (SOR) |
| 5 | SUBMITTAL TRANSMITTAL |
| 6 | PROPOSED "OR EQUAL" SUBSTITUTION TRANSMITTAL |
| 7 | DAILY EXTRA WORK REPORT |
| 8 | REQUEST FOR INTERPRETATION (RFI) |
| 9 | WARRANTY FORM |
| 10 | CERTIFICATE OF SUBSTANTIAL COMPLETION |
| 11 | REQUEST FOR PROPOSAL (RFP) |
| 12 | FIELD DIRECTIVE |
| 13 | UNILATERAL CHANGE ORDER |
| 14 | FIELD ORDER |
| 15 | CONTRACTORS COST BREAKDOWN WORKSHEET |
| 16 | CONTRACT CHANGE ORDER |
| 17 | EQUIPMENT TEST REPORT |
| 18 | MANUFACTURER'S REPRESENTATIVE SERVICE REPORT |
| 19 | MANUFACTURER'S INSTALLATION CERTIFICATE FORM |
| 20 | MANUFACTURER'S INSTRUCTION CERTIFICATE FORM |
| 21 | PIPE TESTING FORM |

**CAD WAIVER**
**Form 01999-1**

Date: _____

From: (Contractor and Address)
_____
_____
_____

To: Name of Owner
Owner's Address

The undersigned agrees to the terms of this CAD Waiver as a condition for receiving the Plans of (Complete Name of Project) in electronic form on a CD-ROM.

(Full name of Contractor), hereafter referred to as Contractor, acknowledges that anomalies and errors can be introduced into CAD Files when they are transferred or used in an incompatible computer environment. Contractor further acknowledges that differences can exist between the data in CAD Files and the information contained in hard copy Plans (which are the drawings, sketches, and other graphic materials contained within the (Project).

Plans, issued to date to the (Contractor) printed from such CAD Files. Contractor's use of CAD Files will be solely at Contractor's risk. Contractor hereby releases the Owner, Design Engineer and Engineer as designated in the Contract Documents of the subject Project, from any damages or losses of any kind, including, but not limited to, damages or losses to property or persons (including death), economic losses, delays, Contract cost increases, and any consequential, special, indirect or incidental damages, resulting from the transfer or use of the CAD Files, except for damages or losses caused by the Owner's, Design Engineer's or Engineer's sole negligence or willful misconduct.

Contractor's use of the CAD Files is limited to the (Complete Name of Project). Contractor agrees that the CAD Files will not be used for any other purpose. Contractor agrees not to reproduce, distribute, disclose, modify, transfer, or assign the CAD Files.

The CAD Files represent instruments of professional service and shall remain the Owner's property. Owner shall be deemed the owner of the CAD Files, however, the intellectual property rights remain the Design Engineer's. The Design Engineer remains responsible for the design to the extent allowed by the Business and Professions Code. The Owner provides the CAD Files "as is" and makes no representations or warranties, express or implied, of merchantability, adequacy, completeness or sufficiency, or any results intended to be achieved as to its use.

Any discrepancy between the electronic files and the hard copy Plans shall be determined in favor of the hard copy Plans provided as per the Contract Documents.

Contractor agrees to defend, indemnify, and hold the Owner, Design Engineer and Engineer harmless from any claims, suits, or losses (including reasonable attorney's fees and all legal expenses) arising out of or in any way related to the Contractor's use of the CAD Files.

Contractor shall not transfer the CAD Files, any derivative of the CAD Files, or any copy of the CAD Files in any form to a third party without obtaining written consent of the Owner. If the Contractor fails to perform or observe any of the terms hereunder, the Owner may terminate Contractor's use of the CAD Files, among other remedies.

Should any legal proceeding be commenced between the parties to this Agreement seeking to enforce any of its provisions, the prevailing party in such a proceeding shall be entitled, in addition to such other relief as may be granted, to a reasonable sum for attorney's fees which shall be determined by the court or forum in such a proceeding or in a separate action brought for that purpose.

This Agreement shall be governed by the laws of the State of California.

The signatures below indicate acceptance to the terms stated above.

| Contractor: | Sausalito-Marin City Sanitary District: |
|---|---|
| By:_____ | By:_____ |
| Name:_____ | Name:_____ |
| Title:_____ | Title:_____ |

**Contractor's Daily Report**
**Form 01999-2**

| PROJECT NAME:<br>CONTRACT NO.: | | | | DATE | REPORT NO |
|---|---|---|---|---|---|
| CONTRACTOR | | | OWNER | | |
| PROJECT MANAGER | | HOURS WORKED<br>From: To: | | WEATHER | |
| CONTRACTOR MANPOWER (BY LABOR CLASS) | NO. | TOTAL HOURS | SUBCONTRACTOR MANPOWER | NO. | TOTAL HOURS |
| | | | | | |
| | | | | | |
| | | | | | |
| | | | | | |
| | | | | | |
| | | | | | |
| | | | | | |
| CONTRACTOR EQUIPMENT | NO. | TOTAL HOURS | SUBCONTRACTOR EQUIPMENT | NO. | TOTAL HOURS |
| | | | | | |
| | | | | | |
| | | | | | |
| | | | | | |

**DESCRIPTION OF WORK PERFORMED TODAY (ATTACH ADDITIONAL SHEETS IF NECESSARY)**

**REMARKS BY CONTRACTOR (Delays, Interruptions, Deviations, Extra Work Activities, Unusual Occurrences, etc.)**

**MATERIALS/EQUIPMENT DELIVERED**

| REPORT PREPARED BY | TITLE | DATE |
|---|---|---|
| | | |

Form No. 01999-3

# Contractor's Application and Certificate For Payment

| | | | | | |
|---|---|---|---|---|---|
| | | Application Period: | | Pay Request No.: | |
| To (Owner): | | From (Contractor): | | For the Period | |
| Project Name: | | Address (Street , P.O. Box) | | From: | |
| Owner's Contract No.: | | City, State & Zip | | To: | |
| | | | | Contract Date: | |

**Change Order Summary**

| Approved Change Orders | | |
|---|---|---|
| Number | Additions | Deductions |
| | | |
| | | |
| | | |
| | | |
| | | |
| | | |
| | | |
| | | |
| | | |
| | | |
| | | |
| TOTALS | $0.00 | $0.00 |

APPLICATION IS MADE FOR PAYMENT AS SHOWN BELOW. THE PRESENT STATUS OF THIS CONTRACT IS AS FOLLOWS:

| | |
|---|---|
| **A. ORIGINAL CONTRACT SUM……** | $0.00 |
| **B. Net change by Change Orders……..** | $0.00 |
| **C. CURRENT CONTRACT PRICE……** | $0.00 |
| **D. TOTAL COMPLETED AND STORED TO DATE……** | $0.00 |
| **(Column F Progress Estimate)** | |
| **WITHHELD AMOUNTS** | |
| **E. Retainage - __%__ of Work Completed……** | $0.00 |
| **F. Liquidate Damages……** | $0.00 |
| **G. Other……** | $0.00 |
| **H. SUBTOTAL-WITHHELD……** | $0.00 |
| **I. TOTAL REQUESTED THIS APPLICATION……** | $0.00 |
| **J. BALANCE TO FINISH, PLUS WITHHELDS……** | $0.00 |

## CONTRACTOR'S CERTIFICATION

The undersigned Contractor certifies that: (1) all previous progress payments received from Owner on account of Work done under Contract have been applied on account to discharge Contractor's legitimate obligations incurred in connection with Work covered by prior Applications for Payment; (2) title of Work, materials and equipment incorporated in said Work of otherwise listed in or covered by this Application for Payment will pass to Owner at time of payment free and clear of all Liens, security interests and encumbrances (except such as are covered by a Bond acceptable to Owner indemnifying Owner against any such Lie Payment of encumbrances); and (3) all Work covered by this Application for Payment is in accordance with the Contract Documents and is not defective.

By: _____

Title: _____ Date: _____

Payment of: $ _____
(Line I or other - attach explanation of other amount)

is recommended by: _____ _____
(Engineer) (Date)

Payment of: $ _____
(Line I or other - attach explanation of other amount)

is approved by: _____ _____
(Owner) (Date)

## Progress Estimate

# Contractor's Application

| | | | | | | | | |
|---|---|---|---|---|---|---|---|---|
| Project: | | | | Application Number: | | | | |
| Contractor: | | | | Application Period: | From: | | To: | |
| A | | B | Work Completed | | E | F | | G |
| Item | | | C | D | | Total Completed | % | Balance to |
| Specification Section No. | Description | Scheduled Value | From Previous Application (C+D) | This Period | Materials Presently Stored (not in C or D) | and Stored to Data (C+D+E) | (F) / B | Finish (B-F) |
| | | | | | | 0 | #DIV/0! | 0 |
| | | | | | | | | |
| | | | | | | | | |
| | | | | | | | | |
| | | | | | | | | |
| | | | | | | | | |
| | | | | | | | | |
| | | | | | | | | |
| | | | | | | | | |
| | | | | | | | | |
| | | | | | | | | |
| | | | | | | | | |
| | | | | | | | | |
| | | | | | | | | |
| | | | | | | | | |
| | | | | | | | | |
| | | | | | | | | |
| | | | | | | | | |
| | | | | | | | | |
| | | | | | | | | |
| | | | | | | | | |
| | | | | | | | | |
| | | | | | | | | |
| | | | | | | | | |
| | | $0.00 | $0.00 | $0.00 | $0.00 | $0.00 | #DIV/0! | $0.00 |

**SYSTEM OUTAGE REQUEST FORM**
**Form No. 01999-4**

**System to be Shutdown:**

| **Submittal No.** | |
|---|---|
| ( ) 1st Submission | ( ) Re-Submittal |
| Spec Section | |
| Dwg/Detail No. | |

_____
_____
_____
_____
_____
_____

Date of Shutdown: _____ Beginning at _____ a.m. p.m.

Duration of Shutdown: _____ Critical Path Activity? ( ) yes ( ) no

| Owner: Sausalito-Marin City Sanitary District | **Routing** | **Date Sent** | **Date Received** |
|---|---|---|---|
| Project: | Contractor/CM | | |
| Contractor: | CM/Design Engineer | | |
| | CM/Owner | | |
| Regulatory Agency Notification Required? ( ) yes ( ) no<br>Is a Dry Run Required? ( ) yes ( ) no<br>Confined Space Entry? ( ) yes ( ) no<br>Combustible/Hazardous Gases Present? ( ) yes ( ) no | Design Engineer/CM | | |
| | Owner/CM | | |
| | CM/Design Engineer | | |
| Describe work to be performed including detailed sequence of events, safety plan, protection of existing facilities, equipment to be used and contingency plan. Use additional sheets as necessary. | | | |

| |
|---|
| Will you require assistance from Owner's Operations?  Note that all existing valves and controls shall be operated by Sausalito-Marin City Sanitary District operations staff only. |

**SYSTEM OUTAGE REQUEST FORM, (CONT'D)**
**Form No. 01999-4**

| Outage Contact Information | Name of Person on Call/Duty | Home Phone | Cell Phone and/or Pager |
|---|---|---|---|
| Contractor | | | |
| Construction Mgr. | | | |
| Owner's Operations | | | |
| Design Engineer | | | |

| Additional Contractor Comments: | **CM/Owner /Design Engineer Review Action** |
|---|---|
| Certified by:<br>_____<br>( Contractor's Signature) | ( ) SOR Acceptable with comments noted on attached.<br><br>) SOR Not Acceptable with reasons noted on attached. Re-Submittal is required.<br><br>_____ Date: _____<br>(Engineer's Signature) |

# SUBMITTAL TRANSMITTAL
# Form No. 01999-5

**SUBMITTAL TRANSMITTAL**

Submittal Description: _____ Submittal No: _____

Spec Section: _____

| | Routing | Sent | Received |
|---|---|---|---|
| OWNER: SAUSALITO MARIN CITY SANITARY DISTRICT | Contractor/CM | | |
| PROJECT: | CM/Engineer | | |
| | Engineer/CM | | |
| CONTRACTOR: | CM/Contractor | | |

We are sending you ☐ Attached ☐ Under separate cover via _____.
☐ Submittals for review and comment
☐ Product data for information only

Remarks: _____

| Item | Copies | Date | Section No. | Description | Review action[a] | Reviewer initials | Review comments attached |
|---|---|---|---|---|---|---|---|
| | | | | | | | |
| | | | | | | | |
| | | | | | | | |
| | | | | | | | |

**[a] Note: NE = No exceptions noted; MCN = Make corrections noted; A&R = Amend and resubmit; R = Rejected**

Attach additional sheets if necessary.

**Contractor**

Certify either A or B:

☐ A. We have verified that the material or equipment contained in this submittal meets all the requirements, including coordination with all related work, specified (no exceptions).

☐ B. We have verified that the material or equipment contained in this submittal meets all the requirements specified except for the attached deviations.

No. Deviation

_____ _____

_____ _____

_____ _____

Certified by: _____

Contractor's Signature

Corrections or comments made relative to submittals during this review do not relieve the Contractor from compliance with the requirements of the drawings and specifications. This submittal is only for review of general conformance with the design concept of the project and general compliance with the information given in the contract documents. The Contractor is responsible for confirming and correlating all quantities and dimensions, selecting fabrication processes and techniques of construction, coordinating his work with that of other trades, and performing the work in a safe and satisfactory manner.

For SMCSD: _____

Construction Manager

**PROPOSED "OR EQUAL" SUBSTITUTION SUBMITTAL TRANSMITTAL**
**Form No. 01999-6**

**Proposed "Or Equal" Substitution Submittal Description:**

| **Submittal No.** | |
|---|---|
| ( ) 1st Submission | ( ) Re-Submittal |
| Spec Section | |
| Dwg/Detail No. | |

_____

Priority Level: ( ) Low ( ) Medium ( ) High **( ) On Critical Path**

| Owner: | **Routing** | **Date Sent** | **Date Received** |
|---|---|---|---|
| | Contractor/CM | | |
| Project: | CM/Design Engineer | | |
| | Design Engineer/CM | | |
| Contractor: | CM/Contractor | | |

**Proposed "Or Equal" Substitution Item or Service**

A. When the first specified item is followed by a second maker's name and "or equal," the Contractor may submit Proposed Equivalent items for the Engineer's review. Proposed "Or Equal" Substitution items that are in the Engineer's judgment equal to the first specified item in quality, utility, and appearance, will be Favorably Reviewed. Where a product description and first maker's name is followed by "or equal" with no second maker's name, it means the Engineer knows of no equivalent product and the Contractor may submit Proposed Equivalent products by other makers for review. Where the term "or equal" is omitted, it means that the named item is required to meet the Owner's needs; no products or makers other than those specified will be considered.

B. This request shall include adequate technical information to fully describe the function and quality of the item. Submittals of Proposed "Or Equal" Substitution items that are not made within thirty (30) calendar days of the Notice to Proceed date will be rejected unless the Owner has agreed in writing to a later submittal date and the Contractor agrees to comply with all conditions of the Owner for the late submittal. If the Contractor's second attempt to obtain Favorable Review of a Proposed "Or Equal" Substitution item is unsuccessful, the Contractor shall submit the first specified item.

C. Inclusion of a second maker's name indicates the maker is acceptable but does not necessarily indicate the maker offers a standard product equal to the first specified item. Items by the second named maker are subject to the same conditions of review and compatibility as other Proposed "Or Equal" Substitution items. Inclusion of a maker's name and/or model number after a specification description is not a representation that the maker will furnish an item meeting the Contract requirements at bid time or at time of need. It is the Contractor's sole responsibility to furnish items meeting the Contract requirements.

D. The Engineer's review of Proposed "Or Equal" Substitution items is based solely on information provided by the Contractor and on the Contractor's warranty that the proposed item is equal in quality, utility, function and appearance to the first specified item. Favorable Review of a Proposed "Or Equal" Substitution item has the same meaning and is subject to the same limitations that apply to the Favorable Review of Product Data and Shop Drawings described in the Contract Documents.

E. Submit with proposal:

1. Description of item being proposed including the Manufacturer's model or product number.
2. Manufacturer's representation that the proposed "or equal" substitution item or service is equal to or superior to specified item in all respects.
3. Manufacturer's product data.
4. Information about several recent similar installations, including project name, owner's name, address, telephone number, and name of knowledgeable person to contact for information on performance of the product.
5. Whether a reduction in the Contract Price is being proposed. If so, provide a detailed cost breakdown substantiating the cost reduction. Consideration should be given to all extra costs and expenses necessary to make the proposed "or equal" substitution meet or exceed the all requirements found in the Contract Documents.
6. Whether a reduction in the Contract Time is being proposed. If so, provide schedule analysis substantiating the reduction in Contract Time and assumptions made in the schedule analysis.
7. Explain all known differences between the product specified and the Proposed "Or Equal" Substitution. Explanation to consider such items as:
   a) Does the substitution affect dimensions shown on Drawings?

b) Are the manufacturer's guarantees and warranties on the proposed substitution items identical to those on the specified items? If there are differences, please specify each and every difference in detail.

c) Does the proposed "or equal" substitution impact other contractors, trades or suppliers?

d) Is the proposed "or equal" substitution compatible with all other interrelated equipment, materials and products?

e) Any differences in Operations and Maintenance costs?

f) Any differences in available factory authorized repair centers with regards to response times and geographic location?

g) Will use of proposed "or equal" substitution be subject to any license fee or royalty?

h) Are there any color or pattern differences? If so, provide color and pattern samples?

The undersigned hereby:

1. Certifies that he/she has thoroughly investigated the Proposed "Or Equal" Substitution item or service and has determined that the function/utility, appearance and quality of the Proposed "Or Equal" Substitution item or service are equivalent or superior to those of the specified item;
2. Certifies that the Proposed "Or Equal" Substitution item or service is compatible with all interrelated equipment, materials, products and services unless otherwise explained in specific detail in this submittal;
3. Agrees to coordinate installation and make all other changes that may be required for Work to be complete in all respects at no additional cost to the Owner;
4. Waives all claims for additional costs and Contract Time due to late ordering of the specified products or services caused by requests for "Or Equal" Substitutions that are subsequently rejected by the Engineer;
5. Represents and warrants that the Contractor is solely responsible for any extra cost or expense necessary to make the Proposed "Or Equal" Substitution item or service fully equivalent to and compatible with the Contract Documents and will meet or exceed the Engineer's design intent;
6. Agrees to compensate the Owner for all additional redesign costs associated with the Proposed "Or Equal" Substitution item or service and the cost of the Engineer's review of the Proposed "Or Equal" Substitution item or service;

**PROPOSED "OR EQUAL" SUBSTITUTION SUBMITTAL TRANSMITTAL (CONT'D)**
**Form No. 01999-6**

7. Waives all claims for additional costs and Contract Time which may subsequently become apparent; and
8. Agrees to comply with all additional requirements imposed by the Owner and Engineer should the Proposed "Or Equal" Substitution item or service is approved.

Submitted by:

_____
Contractor

_____
Name

_____
Signature

_____
Title

Date: _____

## Daily Extra Work Report

| | | | |
|---|---|---|---|
| Job Title: | Contract No.: | Field Order No.: | Sheet No. ____ of ____ |
| Contractor: | | Date Reported: | Date Performed |
| Description of Work: | | | |

| Equipment* | | | Hours | Hourly Rate | Delay Factor | Extended Amounts | Labor* | | Hours | Hourly Rate | Extended Amounts |
|---|---|---|---|---|---|---|---|---|---|---|---|
| Model | Code | Description | | | | | | | | | |
| | | | | | | | | OT | | | $0.00 |
| | | | | | 1.00 | $0.00 | | Reg | | | $0.00 |
| | | | | | | | | OT | | | $0.00 |
| | | | | | 1.00 | $0.00 | | Reg | | | $0.00 |
| | | | | | | | | OT | | | $0.00 |
| | | | | | 1.00 | $0.00 | | Reg | | | $0.00 |
| | | | | | | | | OT | | | $0.00 |
| | | | | | 1.00 | $0.00 | | Reg | | | $0.00 |
| | | | | | | | | OT | | | $0.00 |
| | | | | | 1.00 | $0.00 | | Reg | | | $0.00 |
| | | | | | | | | OT | | | $0.00 |
| | | | | | 1.00 | $0.00 | | Reg | | | $0.00 |
| Total Cost of Equipment - Regular Hours | | | | | B. | **$0.00** | Subtotal - Overtime Hours | OT | | | **$0.00** |
| **Material and/or Work done by Others**** | | | | | | | Subtotal - Regular Hours | Reg | | | **$0.00** |

| Description | No. Units | Unit Cost | | Extended Amounts | **Description** | Ltr. | % Markup | Total Costs |
|---|---|---|---|---|---|---|---|---|
| | | | | $0.00 | Total Cost of labor (Regular + OT) | A. | | $0.00 |
| | | | | $0.00 | Total Cost of Equipment | B. | | $0.00 |
| | | | | $0.00 | Material and/or Work done by Others | C. | | $0.00 |
| | | | | $0.00 | Markup on Labor (A.) | | 20% | $0.00 |
| | | | | $0.00 | Markup on Equipment (B.) | | 10% | $0.00 |
| | | | | $0.00 | Markup on Materials and Work (C.) | | 10% | $0.00 |
| Total Cost of Materials and Work - Regular Hours | | | C. | **$0.00** | Total This Report | | | **$0.00** |

* Includes Equipment and Labor of Subcontractors and Owner-Operators.

** Section is used to report work for which labor rates as described in the specifications are unavailable.

1. List Model, Code & Description of Equipment as it appears in the equipment rental rates booklet published by Caltrans.

2. List labor as it appears in the labor rate breakdown as described in the specifications.

3. Attach photocopies of applicable labor rate breakdown and equipment rental sheets.

4. List operator on same line as equipment.

Contractor's Authorized Field Representative

Owner's Field Representative

Receipt does not constitute acceptability for payment or acceptance of "Extra Work" status for work.

**REQUEST FOR INTERPRETATION**
**Form No. 01999-8**

**Area of Work in**

| **RFI No.** | |
|---|---|
| ( ) 1st Submission | ( ) Re-Submittal |
| Spec Section(s) | |
| Dwg/Detail No.'s | |

**Question:**_____
_____
_____

RFI Generated by: ( ) Contractor ( ) CM ( ) Other _____

Priority Level: ( ) Low ( ) Medium ( ) High **( ) On Critical Path**

Is their a Cost Impact associated with this RFI? ( ) yes ( ) no ( ) possibly

Is their a Time Impact associated with this RFI? ( ) yes ( ) no ( ) possibly

| Owner: | **Routing** | **Date Sent** | **Date Received** |
|---|---|---|---|
| | Contractor/CM | | |
| Project: | CM/Design Engineer | | |
| | Design Engineer/CM | | |
| Contractor: | CM/Contractor | | |
| Question (s): (Attach sketches or additional sheets as needed)<br><br>Submitted by: _____ Date: _____ | | | |

| |
|---|
| Response: (Attach sketches or additional sheets as needed)<br><br><br><br>Response by: _____ Date: _____ |

**WARRANTY FORM**
**Form No. 01999-9**

**Warranty For:**

**(Project/Component)_____**

**(Location)___**

We hereby guarantee the (Total Project or Owner-Occupied Project Component) that we have constructed for a period of one (1) year (unless, pursuant to the Contract Documents, an extended warranty is to be provided in which case the duration of the extended warranty shall apply) from (Date) the date of acceptance of the work/substantial completion by the Sausalito-Marin City Sanitary District.

We agree that if any of the equipment should fail due to any reason other than improper maintenance or improper operation, if any pipe or appurtenances should develop leakage, or if any settlement of fill or backfill occurs, or should any portion of the work fail to fulfill any of the requirements of the Specifications, we will, within ten days after written notice of such defects, commence to repair or replace the same together with any other work which may be damaged or displaced in so doing.

In the event of our failure to comply with the above with the above mentioned conditions within a reasonable time after being notified, or should the exigencies of the case require repairs or replacements to be made before we can be notified or respond to notification, we do hereby authorize the Sausalito-Marin City Sanitary District to proceed to have the defect repaired and made good at our expense, and we will pay the cost therefore upon demand.

The warranty provided herein shall not be in lieu of, but shall be in addition to any warranties or other obligations otherwise imposed by the Contract Documents and by law.

Contractor:_____

**CERTIFICATE OF SUBSTANTIAL COMPLETION**
**Form No. 01999-10**

Owner: _____

Project Name: _____

Owner's Contract Number:_____

Contractor:_____

Contract for Construction of: _____

_____

_____

Project or Specified Part Shall Include: _____

_____

Contract Date: _____

The Work performed under this Contract has been inspected by authorized representatives of the Owner, Contractor, Construction Manager and Engineer, and the Project (or specified part of the Project, as indicated above) is hereby accepted by the Owner and declared to be substantially completed on the above date.

1) Final completion of the Work shall be the date of such acceptance of the Work by the Owner.

2) Final completion shall mean full performance of the Contract requirements.

A list of all items remaining to be completed or corrected has been sent to the Contractor in the Owner's letter dated _____. All such work shall be completed or corrected to the satisfaction of the Owner prior to the release of the Contractor's retention and within 30 calendar days following the date of the Notice of Substantial Completion.

RECOMMENDED BY CONSTRUCTION MANAGER

_____
(Signature)

_____
(Date)

**CERTIFICATE OF SUBSTANTIAL COMPLETION (CONT'D)**
**Form No. 01999-10**

RECOMMENDED BY ENGINEER

_____
(Signature)

_____
(Date)

The Owner accepts the Project or specified area of the Project as substantially completed and will assume full possession of the Project or specified area of the Project at (time and date). The responsibility for utilities, fuels and chemicals under the Contract Documents will be assumed by the OWNER after that date.

OWNER

_____
(Signature)

_____
(Date)

The Contractor hereby accepts the above Notice of Substantial Completion and agrees to complete and correct all of the items as outlined in the Owner's letter to the Contractor dated _____.

CONTRACTOR

_____
(Signature)

_____
(Date)

# Request for Proposal

**Form No. 01999-10**

QUOTATION NO: _____

TO: _____ DATE: _____

FROM: _____

PROJECT: _____

KEYWORD DESCRIPTION: _____

DATE PROPOSAL REQUIRED: _____

The following modification to the Contract has been identified. Pursuant to Section 00700, General Conditions, please provide a proposal for the alteration as described in Item 1. The proposal should include an itemized breakdown of contractor and subcontractor costs, including labor, materials, rentals, approved services, overhead, and profit. This request shall not be considered authorization to proceed with the work herein described. This is not a change order.

**To be completed by Initiator of Request:**

**1. Scope of Work: (include list of attachments)**

Scope of work has not changed.

**2. Reason(s) for Modification:**

**3. Approval of Request:**

Owner: _____ Date: _____

Construction Manager: _____ Date: _____

**To be completed by Contractor:**

4. Total cost of modification (attach detailed breakdown) $ _____

5. Will a modification to the Contract Time be required? ☐ Yes ☐ No

If yes, please provide time impact analysis in accordance with Section 01324, Progress Schedules and Reports

_____

6. Proposal is in effect until: (date) _____

Signed:

Contractor's Authorized Representative _____ Date _____

**Field Directive No. _____**

**Form No. 01999-12**

Date of Issuance: _____ Effective Date: _____

Project:

| Owner: | Owner's Contract No.: |
|---|---|
| Contractor: | |

**Attention:**
You are hereby directed to promptly execute this Field Directive issued in accordance with Section 00700, **Field Directive**, for changes in the Work without changes in Contract Price or Contract Times. If you consider that a change in Contract Price or Contract Times is required, please notify the Engineer immediately and before proceeding with this Work. Any modifications, including a change to the Contract price or Contract requirements shall be covered by a formal Change Order executed by Owner and Contractor.

Reference: _____ _____
(Specification Section(s))/RFI # (Drawing(s) / Detail(s))

Description:

Refer to Drawing Sheets _____ Section or Detail _____

Refer to Specification Paragraphs _____

Will additional drawings be necessary? ( ) ( )
Yes No

Attachments:

| | Issued by: |
|---|---|
| | Engineer |
| **Receipt Acknowledged by (Contractor):** | Date: |

Copy to Owner

**Unilateral Change Order**
**Form No. 01999-13**

| | | |
|---|---|---|
| OWNER: | | |
| | | |
| PROJECT: | | |
| | | |
| CHANGE DIRECTIVE NO: | | DATE: |

When signed by the Owner, this document becomes effective immediately and the Contractor shall proceed with the change(s) described below. The Contractor is hereby directed to make the following change(s) to the Work of the Contract: *(Reference attachments by name and date)*

_____

_____

_____

_____

_____

_____

PROPOSED ADJUSTMENTS

1. The proposed basis of adjustment to the Contract Sum is:
   - ☐ A Lump Sum adjustment of: _____
   - ☐ A Unit Price adjustment of: _____ per _____
   - ☐ Actual costs as documented and approved per the Contract.
   - ☐ Other method as provided below:
     *(Insert terms of the basis of adjustment or reference attachment by name and date)*
   - ☐ Unilateral determination by Owner.
   - ☐ NO CHANGE
2. The proposed adjustment to the Contract Time is:
   - ☐ NO CHANGE
   - ☐ An increase of _____ calendar days
   - ☐ A decrease of _____ calendar days

PREPARED BY:

| | | |
|---|---|---|
| *(Print or Type Name of Engineer)* | *(Signature)* | *(Date)* |

WORK AUTHORIZED BY:

| | | |
|---|---|---|
| *(Print or Type Name of Owner)* | *(Signature)* | *(Date)* |

DIRECTIVE ACCEPTED BY:

*Signature by the Contractor indicates the Contractor's full and complete agreement with the proposed basis of adjustment in the Contract Sum and Time set forth in this Construction Change Directive. Change Directives accepted by the Contractor shall be incorporated into a Change Order without further adjustment.*

| | | |
|---|---|---|
| *(Print or Type Name of Contractor)* | *(Signature)* | *(Date)* |

**Field Order**
**Form No. 01999-14**

FIELD ORDER NO: _____ Date: _____

To Contractor: _____

Project No.: _____

Contract Days Changed ☐ Yes ☐ No ☐ To be determined

Project Name: _____

Location: _____

You are authorized to proceed with the following work:

_____

_____

_____

Justification: _____

_____

Cost Basis: $ _____
Time and Material
Not to Exceed Estimate

Contractor to submit.

_____ DATE: _____
Recommended by Engineer

Approval By: _____ DATE: _____
Owner

Accepted By: _____ DATE: _____
Contractor

Field Work Orders will be converted to a Change Order within thirty (30) days of the Owner's approval. Maximum amount for any one Field Work Order shall conform to the Owner's policy guidelines. All costs incurred by Contractor resulting from this Field Order will be determined in accordance with Section 00700, **COST DETERMINATION**.

**Contractor must submit Daily Extra Work Reports to the Engineer no later than the working day following the performance of said work. See Section 00700, Field Order- Force Account Work.**

# CONTRACTOR'S COST BREAKDOWN WORKSHEET
## Form No. 01999-15
## RFP #____

| DESCRIPTION | QTY | UNIT | UNIT MHRS | TOTAL MHRS | COM-POSITE MH RATE | UNIT LABOR COST | TOTAL LABOR COST | UNIT EQUIP. COST | TOTAL EQUIP COST | TOTAL L&E UNIT COST | UNIT EXPEND MATLS COST | TOTAL EXPENDABLES MATERIALS COST | UNIT P. MATL COST | TOTAL PERMANENT MATERIALS COST | UNIT SUBS/ SPECIAL SERVICES COST | SUBS/ SPECIAL SERVICES COST | TOTAL COST |
|---|---|---|---|---|---|---|---|---|---|---|---|---|---|---|---|---|---|
| | | | | | | | | | | | | | | | | | |
| | | | | 0.0 | | 0.00 | $0 | | $0 | $0.00 | | $0 | | $0 | | $0 | - |
| | | | | 0.0 | | 0.00 | $0 | | $0 | $0.00 | | $0 | | $0 | | $0 | - |
| | | | | 0.0 | | 0.00 | $0 | | $0 | $0.00 | | $0 | | $0 | | $0 | - |
| | | | | 0.0 | | 0.00 | $0 | | $0 | $0.00 | | $0 | | $0 | | $0 | - |
| | | | | 0.0 | | 0.00 | $0 | | $0 | $0.00 | | $0 | | $0 | | $0 | - |
| | | | | 0.0 | | 0.00 | $0 | | $0 | $0.00 | | $0 | | $0 | | $0 | - |
| | | | | 0.0 | | 0.00 | $0 | | $0 | $0.00 | | $0 | | $0 | | $0 | - |
| | | | | 0.0 | | 0.00 | $0 | | $0 | $0.00 | | $0 | | $0 | | $0 | - |
| | | | | 0.0 | | 0.00 | $0 | | $0 | $0.00 | | $0 | | $0 | | $0 | - |
| | | | | 0.0 | | 0.00 | $0 | | $0 | $0.00 | | $0 | | $0 | | $0 | - |
| | | | | 0.0 | | 0.00 | $0 | | $0 | $0.00 | | $0 | | $0 | | $0 | - |
| | | | | 0.0 | | 0.00 | $0 | | $0 | $0.00 | | $0 | | $0 | | $0 | - |
| **GRAND TOTALS** | | | | **-** | | | **$0** | | **$0** | | | **$0** | | **$0** | | **$0** | **$0** |
| | | | | | | | | | | | | | | | | ***Math Check*** | ***$0*** |
| Direct Field Labor Mark-up @ 20% | | | | | | | $0.00 | | | | | | | | | | |
| Equipment Mark-up @ 15% | | | | | | | | | $0.00 | | | | | | | | |
| Material Mark-up @ 10% | | | | | | | | | | | | $0.00 | | $0.00 | | | |
| Subs/Special Services Mark-up @ 5% | | | | | | | | | | | | | | | | $0.00 | |
| | | | | | | | | | | | | | | | | | |
| Mark-up Subtotal | | | | | | | | | | | | | | | | | $0.00 |
| Actual Costs plus Mark-up Subtotal | | | | | | | | | | | | | | | | | $0.00 |
| Bonds/ Insurance ( not to exceed 21/2%) | | | | | | | | | | | | | | | | | $0.00 |
| **TOTAL** | | | | | | | | | | | | | | | | | **$0.00** |

**Contract Change Order**
**Form No. 01999-16**

**Project:** (NAME OF PROJECT)

**Change Order No. 0X**
**Date:**

**Owner:** Sausalito-Marin City Sanitary District
**Contractor:** (CONTRACTOR)

**Phone:** (415) 332-0244
**Phone:** (XXX) XXX-XXXX

---

The following change is hereby made to the contract:

**Description of Change:**

This negotiated change order, in the amount of $0.00, is for… (Describe change/s)

**Pricing Data:** A negotiated settlement in the total amount of **$0.00**.

**Requested by:** Mutually agreed upon by Contractor and Owner.

**Contract Time:** This change order does not constitute an extension of the contracted time. (Revise Contract time as agreed to by Owner.)

---

The owner and the contractor hereby agree that this change order constitutes full and mutual accord and satisfaction for all time, all costs, and all impacts related to this revision. In accepting this change order, the contractor agrees that it represents a full and equitable adjustment to the contract, and further agrees to waive all rights to file claim with respect to any difficulties arising from, or as a result of, this change.

---

| | | |
|---|---|---|
| Original Contract: | $0.00 | Approved by: |
| Previous Additions: | $0.00 | _____ Construction Manager – NAME, COMPANY |
| Previous Deductions: | $0.00 | |
| This Change Order: | $0.00 | _____ Owner – Kevin Rahman, SMCSD |
| Contract to Date: | $0.00 | _____ Contractor – NAME, COMPANY |

**EQUIPMENT TEST REPORT**
**Form No. 01999-17**

NOTE: This example equipment test report is provided for the benefit of the Supplier and is not specific to any piece of equipment to be installed as a part of this Project. The example is furnished as a means of illustrating the level of detail required for the preparation of equipment test report forms for this Project.

Project: _____
Owner:
Contractor: _____

Supplier: _____

Equipment Name: _____
Equipment Number: _____
Specification Ref: _____

---

## PRE-OPERATIONAL CHECKLIST

| | Supplier | | Engineer | |
|---|---|---|---|---|
| | Verified | Date | Verified | Date |
| **Mechanical** | | | | |
| Lubrication | | | | |
| Alignment | | | | |
| Anchor bolts | | | | |
| Pump/mechanical equipment vibration testing | | | | |
| Seal water system operational | | | | |
| Equipment rotates freely | | | | |
| Safety guards | | | | |
| Valves operational | | | | |
| O&M manual information complete | | | | |
| Supplier's installation certificate complete | | | | |
| | | | | |
| | | | | |
| **Electrical (Circuit ring-out and high-pot tests)** | | | | |
| Circuits:<br>Power to MCC<br>Control to HOA | | | | |

**EQUIPMENT TEST REPORT (CONT'D)**
**Form No. 01999-17**

| | Supplier | | Engineer | |
|---|---|---|---|---|
| | Verified | Date | Verified | Date |
| Indicators at MCC:<br>Red (running)<br>Green (power)<br>Amber (auto) | | | | |
| Indicators at local control panel | | | | |
| Wiring labels complete | | | | |
| Nameplates:<br>MCC<br>Control station<br>Control panel | | | | |
| Electrical equipment grounding verification | | | | |
| Equipment bumped for rotation | | | | |
| **Piping Systems** | | | | |
| Cleaned and flushed:<br>Suction<br>Discharge | | | | |
| Pressure tests | | | | |
| Temporary piping screens in place | | | | |
| Thrust restraint and pipe supports in place | | | | |
| **Instrumentation and Controls** | | | | |
| Flow meter _____ calibration<br>Calibration Report No. | | | | |
| Flow recorder_____ calibrated against transmitter | | | | |
| VFD speed indicator calibrated against independent reference | | | | |
| Discharge overpressure shutdown switch calibration | | | | |
| Simulate discharge overpressure shutdown | | | | |
| I/C equipment grounding verification | | | | |

**EQUIPMENT TEST REPORT (CONT'D)**
**Form No. 01999-17**

## FUNCTIONAL TESTS

| | Supplier | | Engineer | |
|---|---|---|---|---|
| | Verified | Date | Verified | Date |
| **Mechanical** | | | | |
| Motor operation temperature satisfactory | | | | |
| Pump operating temperature satisfactory | | | | |
| Unusual noise, *etc?* | | | | |
| Pump operation: gpm/ psig | | | | |
| Pump Measurement:<br>Flow/Pressure<br>Test gage number | | | | |
| Alignment hot | | | | |
| Doweled in | | | | |
| Pump/mechanical equipment vibration testing | | | | |
| Remarks: | | | | |
| **Electrical** | | | | |
| Local switch function:<br>Runs in *HAND*<br>No control power in *OFF*<br>Timer control in *AUTO* | | | | |
| Overpressure protection switch PS2502C functional in both *HAND* and *AUTO* | | | | |
| Overpressure protection switch PS2502C set at 75 psig | | | | |
| PLC 2500 set at 24 hr cycle, 25 min *ON* | | | | |
| Motor amperage draw test | | | | |

**EQUIPMENT TEST REPORT (CONT'D)**
**Form No. 01999-17**

**OPERATIONAL TEST**

| | Supplier | | Engineer | |
|---|---|---|---|---|
| | Verified | Date | Verified | Date |
| 48-hour continuous test:<br>pump cycles as specified<br>indicators functional<br>controls functional<br>pump maintains capacity<br>overpressure protection remains functional<br>hour meter functional | | | | |

RECOMMENDED FOR BENEFICIAL OCCUPANCY

_____ _____
Engineer Date

ACCEPTED FOR BENEFICIAL OCCUPANCY

_____ _____
Owner's Representative Date

**MANUFACTURER'S REPRESENTATIVE SERVICE REPORT**
**Form No. 01999-18**

Owner: File No. _____

Project: Date: _____

Project No.

- This form should be completed and returned by the manufacturer's representative prior to leaving the site.
- The representative is expected to follow the instructions to manufacturers' service representatives (Page 2) during the site visit.

Manufacturer: _____ MRSR No. _____

Supplier: _____ Contract/P.O. No. _____

Manufacturer's Representative _____
Company

Equipment/Material: _____

Work performed and tests made on equipment:

Factory errors corrected:

Field errors corrected:

The above equipment ___is ___is not ready to be placed in operation.
Remarks:

Arrival onsite _____ _____ __AM __PM Department from Site _____ _____ __AM __PM
Date Time Date Time

Actual total duration onsite was _____ hours for period covered by this report.

Manufacturer's Representative: _____ _____
Signature Date

Address: _____ _____
Phone No.

Report Received By: _____ _____
Signature Date

Distribution: _____ _____ _____

**MANUFACTURER'S INSTALLATION CERTIFICATION FORM**
**Form 01999-19**

Contract No: _____ Specification Section: _____

Equipment name: _____

Contractor: _____

Manufacturer of equipment item:

The undersigned manufacturer of the equipment item described above hereby certifies that he has checked the installation of the equipment and that the equipment, as specified in the Contract Documents, has been provided in accordance with the manufacturer's recommendations and that the trial operation of the equipment item has been satisfactory.

Comments: _____

_____

_____

_____

_____ _____
Date Manufacturer

_____
Signature of
Authorized Representative

_____ _____
Date Contractor

_____
Signature of
Authorized Representative

**MANUFACTURER'S INSTRUCTION CERTIFICATION FORM**
**Form 01999-20**

Contract No.:_____ Specification Section: _____

Equipment name: _____

Contractor: _____

Manufacturer of equipment item: _____

The undersigned manufacturer certifies that a service engineer has instructed the wastewater treatment plant operating personnel in the proper maintenance and operation of the equipment designated herein.

Operations Check List (check appropriate spaces)

| | |
|---|---|
| Start-up procedure reviewed | _____ |
| Shutdown procedure reviewed | _____ |
| Normal operation procedure reviewed | _____ |
| Others: _____ | _____ |
| _____ | _____ |
| _____ | _____ |

Maintenance Check List (check appropriate spaces)

| | |
|---|---|
| Described normal oil changes (frequency) | _____ |
| Described special tools required | _____ |
| Described normal items to be reviewed for wear | _____ |
| Described preventive maintenance instructions | _____ |
| Described greasing frequency | _____ |
| Others: _____ | _____ |
| _____ | _____ |
| _____ | _____ |

_____ _____
Date Manufacturer

_____
Signature of
Authorized Representative

_____ _____
Date Signature of
Owner's Representative

_____ _____
Date Signature of
Contractor's Representative

**PIPE TEST RECORD**
**Form No. 01999-21**

**Date: _____**

| | | |
|---|---|---|
| **Project Name:** | **Project No.:** | **Contractor:** |
| **Improvements** | | |
| **Project - 2009** | | |
| **Pipeline Size & Name:** | **Pipe Type:** | **Pipe Location/Description:** |
| | | |
| | | |
| (SL), SN, IA, etc.) | (DI, PVC, Steel, Copper, etc.) | (Attach sketch if needed) |
| **Section Tested:**<br>**From:_____**<br>**To: _____** | **First Test ___**<br>**Or**<br>**Re-Test ___** | **Length of Pipe Tested:**<br>**Ft.** |

| **Test Specifications** | **Actual Test Results** |
|---|---|
| **Type of Test:**<br>_____<br>**Test Pressure: _____**<br>**Duration: _____**<br>**Allowable loss: _____** | **Start pressure:** _____ **End Pressure:** _____<br>**Start time:** _____ **Stop time:** _____ **Duration:** _____<br>**Actual loss: _____** |

**Comments:**

_____
_____
_____
_____

| | |
|---|---|
| **Test Passes** | |
| **Test Fails** | |

**Tested By:** _____
Contractor

**Test Witnessed By:** _____
Construction Inspector

****END OF SECTION****

# SECTION 02200

# SITE CLEARING

## PART 1 GENERAL

### 1.01 SUMMARY

A. Section includes: Clearing project site only as needed to perform the work.

### 1.02 REFERENCES

A. United States Code of Federal Regulations (CFR):
   1. 40 - Protection of Environment.
      a. 503 - Standards for the Use or Disposal of Sewage Sludge.

### 1.03 DEFINITIONS

A. Clearing: Consists of removal of natural obstructions and existing foundations, buildings, fences, lumber, walls, stumps, brush, weeds, rubbish, trees, boulders, utility lines, and any other items which interferes with construction operations or are designated for removal.

### 1.04 QUALITY ASSURANCE

A. Regulatory requirements: Verify and comply with applicable regulations regarding those governing noise, dust, nuisance, drainage and runoff, fire protection, and disposal.

B. Pre-construction conference: Meet with Owner's representative to discuss order and method of work.

### 1.05 PROJECT CONDITIONS

A. Environmental requirements:
   1. None.

### 1.06 SEQUENCING AND SCHEDULING

A. Clearing: Perform clearing in advance of grading operations.

## PART 2 PRODUCTS (NOT USED)

## PART 3 EXECUTION

### 3.01 EXAMINATION

A. Verification of conditions: Examine site and verify existing conditions for beginning work.

### 3.02 PREPARATION

A. Protect existing improvements from damage by site preparation work.

### 3.03 INSTALLATION

A. Clearing:
   1. Clear areas where construction is to be performed and other areas as indicated on the Drawings, or specified in this Section, of fences, lumber, walls, stumps, brush, roots, weeds, trees, shrubs, rubbish, and other objectionable material of any kind which, if left in place, would interfere with proper performance or completion of the work, would impair its subsequent use, or form obstructions.
   2. Do not incorporate organic material from clearing operations in fills and backfills.
   3. Contractor's temporary construction facilities: Fill or remove pits, fill, and other earthwork required for erection of facilities, upon completion of the work, and level to meet existing contours of adjacent ground.
   4. Backfill and compact cavities left below subgrade elevation by removal of stumps or roots to density of adjacent undisturbed soil.

END OF SECTION

# SECTION 03055

# ADHESIVE-BONDED REINFORCING BARS AND ALL THREAD RODS IN CONCRETE

## PART 1 GENERAL

### 1.01 SUMMARY

A. Section includes:
   1. Bonding reinforcing bars and all thread rods in concrete using adhesives.

### 1.02 REFERENCES

A. American Concrete Institute (ACI):
   1. 355.4 - Qualification of Post-Installed Adhesive Anchors in Concrete and Commentary.

B. American National Standards Institute (ANSI):
   1. Standard B212.15 - Carbide Tipped Masonry Drills and Blanks for Carbide Tipped Masonry Drills.

C. ASTM international (ASTM):
   1. C881 - Standard Specification for Epoxy-Resin-Base Bonding Systems for Concrete.

D. Concrete Reinforcing Steel Institute (CRSI).

E. ICC Evaluation Service, Inc. (ICC-ES):
   1. AC308 - Acceptance Criteria for Post-Installed Adhesive Anchors in Concrete Elements.

F. Society for Protective Coatings (SSPC):
   1. SP-1 - Solvent Cleaning.

### 1.03 TERMINOLOGY

A. The words and terms listed below are not defined terms that require initial capital letters, but, when used in this Section, have the indicated meaning:
   1. Evaluation Service Report (ESR): Report prepared by ICC-ES, or other testing agency acceptable to Engineer and to the Building Official, that documents testing and review of a product to confirm that it complies with the requirements of designated ICC-ES Acceptance Criteria, and to document its acceptance for use under the building code specified in Section 01410 - Regulatory Requirements.

### 1.04 SUBMITTALS

A. Product data: Technical data for adhesives, including:
   1. Manufacturer’s printed installation instructions (MPII).

2. Independent laboratory test results indicating allowable loads in tension and shear for concrete of the types included in this Work, with load modification factors for temperature, spacing, edge distance, and other installation variables.
3. Handling and storage instructions.
4. Evidence of current listing under NSF-61 for use in contact with potable water.

B. Quality control Submittals:
1. Special inspection: Detailed step-by-step instructions for the special inspection procedures required by the building code specified in Section 01410 - Regulatory Requirements.
2. For each adhesive to be used, Evaluation Report confirming that the product complies with the requirements of AC308 for both un-cracked and cracked concrete and for use in Seismic Design Categories A through F.
3. Installer qualifications:
   a. Submit evidence of successful completion of adhesive manufacturer's installation training program.
   b. Submit evidence of current certification for installation of inclined and overhead anchors under sustained tension loading.

C. Inspection and testing reports:
1. Inspections: Field quality control: Reports of inspections and tests:
   a. Inspections: Field quality assurance: Reports of special inspections and tests.

## 1.05 QUALITY ASSURANCE

A. Qualifications:
1. Installation requirements:
   a. Have available at the site, and install anchors in accordance with, the adhesive manufacturer's printed installation instructions.
2. Installer qualifications:
   a. Demonstrating successful completion of adhesive manufacturer's on-site training program for installation of adhesive-bonded anchors.
   b. Holding current certification for installation of adhesive-bonded anchors by a qualified organization acceptable to the Engineer and to the Building Official:
      1) Organizations/certification programs deemed to be qualified are:
         a) ACI-CRSI Adhesive Anchor Installer Certification Program.
         b) Adhesive anchor manufacturer's certification program, subject to acceptance by the Engineer and the Building Official.

## 1.06 DELIVERY, STORAGE, AND HANDLING

A. Store and protect products as follows, unless more restrictive requirements are recommended by the manufacturer:
1. Store adhesives and adhesive components on pallets or shelving in a covered-storage area protected from weather.

2. Control temperature to maintain storage within manufacturer's recommended temperature range:
   a. If products have been stored at temperatures outside manufacturer's recommended range, test by methods acceptable to the Engineer to confirm acceptability before installing in the Work.
3. Dispose of products that have passed their expiration date.

## 1.07 PROJECT CONDITIONS

A. As specified in Section 01612 - Seismic Design Criteria.

B. Seismic Design Category (SDC) for structures: As indicated on the Drawings.

# PART 2 PRODUCTS

## 2.01 GENERAL

A. Like items of materials: Use end products of one manufacturer in order to achieve structural compatibility and singular responsibility.

B. Adhesives shall have a current Evaluation Report documenting testing and compliance with the requirements of ACI 355.4 and ICC-ES AC308 for use with un-cracked concrete and with cracked concrete in the Seismic Design Category specified.

C. Bond reinforcing bars and all thread rods in concrete using epoxy adhesive unless other adhesives specified are specifically indicated on the Drawings or approved in writing by the Engineer.

D. For locations where adhesive will be in direct contact with potable water in the finished work, provide documentation of testing and listing under NSF-61. Testing shall be by a nationally recognized agency acceptable to the Engineer.

## 2.02 EPOXY ADHESIVE

A. Materials:
   1. Meeting the physical requirements of ASTM C881, Type IV, Grade 3, Class B or C depending on site conditions.
   2. 2-component, 100 percent solids, insensitive to moisture.
   3. Cure temperature, pot life, and workability: Compatible with intended use and environmental conditions.

B. Packaging:
   1. Disposable, self-contained cartridge system furnished in side-by-side cartridges designed to fit into a manually or pneumatically operated caulking

gun, and with resin and hardener components isolated until mixing through manufacturer's static mixing nozzle:
    a. Nozzle designed to dispense components in the proper ratio and to thoroughly blend the components for injection from the nozzle directly into prepared hole.
    b. Provide nozzle extensions as required to allow full-depth insertion and filing from the bottom of the hole.
2. Container markings: Include manufacturer's name, product name, batch number, mix ratio by volume, product expiration date, ANSI hazard classification, and appropriate ANSI handling precautions.

C. Manufacturers: One of the following or equal:
    1. Hilti, Inc., HIT-RE 500-V3.
    2. Simpson Strong-Tie Co., Inc., SET-XP.

## 2.03 ALL THREAD RODS

A. Materials: As specified in Section 05120 - Structural Steel Framing for rods, nuts and washers.

## 2.04 REINFORCING BARS

A. As specified in Section 03301 - Concrete Work.

# PART 3 EXECUTION

## 3.01 GENERAL

A. Execution of this work is restricted to installers who have personally completed the adhesive manufacturer's on-site training for the products to be installed, and who are personally certified through a qualified certification program described under Quality Assurance and accepted by the Engineer and the Building Official:
    1. Do not install holes or adhesive until training is complete.

B. Perform work in strict compliance with the accepted MPII and the following instructions. Where the accepted MPII and the instructions conflict, the MPII shall prevail.

C. Install reinforcing bars and all thread rods to embedment depth, and at spacing and locations indicated on the Drawings:
    1. If embedment depth is not indicated, contact the Engineer for requirements.
    2. Do not install adhesive-bonded all thread rods or reinforcing bars in upwardly inclined or overhead applications unless accepted in advance by the Engineer.

## 3.02 PREPARATION

A. Do not begin installation of adhesive bonded anchors until:
   1. Concrete has achieved an age of at least 21 days after placement.
   2. On-site training in installation of adhesive bonded anchors by manufacturer's technical representative is complete. Do not drill holes in concrete or install adhesive and embeds in holes.

B. Review manufacturer's printed installation instructions (MPII) and "Conditions of Use" stipulated in the Evaluation Report before beginning work:
   1. Bring to the attention of the adhesive manufacturer's technical representative any discrepancies between these documents and resolve before proceeding with installation.

C. Install adhesive bonded anchors in full compliance with manufacturer's printed installation instructions using personnel who have successfully completed manufacturer's on-site training for products to be used and who hold certifications specified in this Section.

D. Confirm that adhesive and substrate receiving adhesive are within manufacturer's recommended range for temperature and moisture conditions and will remain so during the curing time for the product.

## 3.03 HOLE SIZING AND INSTALLATION

A. Drilling holes:
   1. Determine location of reinforcing bars or other obstructions with a nondestructive indicator device, and mark locations with construction crayon on the surface of the concrete.
   2. Do not damage or cut existing reinforcing bars, electrical conduits, or other items embedded in the existing concrete without prior acceptance by the Engineer.

B. Hole drilling equipment:
   1. Electric or pneumatic rotary impact type with medium or light impact:
      a. Installation of anchors in cored holes is not permitted.
      b. Set drill to "rotation only" mode, or to "rotation plus hammer" mode in accordance with the manufacturer's installation instructions and the requirements of the Evaluation Report.
      c. Where edge distances are less than 2 inches and "rotation plus hammer" mode is permitted, use lighter impact equipment to prevent micro-cracking and concrete spalling during the drilling process.
   2. Drill bits: Carbide-tipped in accordance with ANSI B212-15 unless otherwise recommended by the manufacturer or required as a "condition of use" in the Evaluation Report:
      a. Hollow drill bits with flushing air systems are preferred. Air supplied to hollow drill bits shall be free of oil, water, or other contaminants that will reduce bond.

C. Hole diameter: As recommended in the manufacturer's installation instructions and the Evaluation Report.

D. Hole depth: As recommended in the manufacturer's installation instructions to provide minimum effective embedment indicated on the Drawings.

E. Obstructions in drill path:
   1. If an existing reinforcing bar or other obstruction is hit while drilling a hole, unless otherwise accepted by the Engineer, stop drilling. Prepare and fill the hole with dry-pack mortar. Relocate the hole to miss the obstruction and drill another hole to the required depth:
      a. Obtain Engineer's acceptance of distance between abandoned and relocated holes before proceeding with the relocation.
      b. Allow dry-pack mortar to cure to a strength equal to that of the surrounding concrete before resuming drilling in the area.
      c. Epoxy grout may be substituted for dry-pack mortar when accepted by the Engineer.
   2. Avoid drilling an excessive number of holes in an area of a structural member, which would excessively weaken the member and endanger the stability of the structure.
   3. When existing reinforcing steel is encountered during drilling and when specifically accepted by the Engineer, enlarge the hole by 1/8 inch, core through the existing reinforcing steel at the larger diameter, and resume drilling at original hole diameter using pneumatic rotary impact drill.
   4. Bent bar reinforcing bars: Where edge distances are critical and interference with existing reinforcing steel is likely, if acceptable to the Engineer, drill hole at 10-degree (or less) angle from axis of reinforcing bar or all thread rod being installed.

F. Cleaning holes:
   1. Insert air nozzle to bottom of hole and blow out loose dust:
      a. Use compressed air that is free of oil, water, or other contaminants that will reduce bond.
      b. Provide minimum air pressure of 90 pounds per square inch for not less than 4 seconds.
   2. Using a stiff bristle brush with diameter that provides contact around the full perimeter of the hole, vigorously brush hole to dislodge compacted drilling dust:
      a. Insert brush to the bottom of the hole and withdraw using a simultaneous twisting motion.
      b. Repeat at least 4 times.
   3. Repeat the preceding steps as required to remove drilling dust or other material that will reduce bond, and in the number of cycles required by the MPII and the Evaluation Report.
   4. Leave prepared holes clean and dry.
   5. Protect prepared and cleaned holes from contamination and moisture until adhesive is installed.
   6. Re-clean and dry previously prepared holes if, in the opinion of the Engineer, the hole has become contaminated after initial cleaning.

## 3.04 INSTALLATION OF ADHESIVE AND INSERTS

A. Clean and prepare inserts reinforcing bars and all thread rods:
   1. Prepare embedded length of reinforcing bars and all thread rods by cleaning to bare metal. Inserts shall be free of oil, grease, paint, dirt, mill scale, rust, or other coatings that will reduce bond.
   2. Solvent clean prepared reinforcing bars and all thread rods over the embedment length in accordance with SSPC SP-1. Provide an oil and grease free surface for bonding of adhesive to steel.

B. Fill holes with adhesive:
   1. Starting at the bottom of the hole, fill hole with adhesive inserting the reinforcing bar or all thread rod.
   2. Fill hole as nozzle is withdrawn without creating air voids.
   3. Unless otherwise indicated on the Drawings, fill hole with sufficient adhesive so that excess adhesive is extruded out of the hole when the reinforcing bar or all thread rod is inserted.
   4. Where necessary, seal hole at surface of concrete to prevent loss of adhesive during curing.

C. Installing reinforcing bars and all thread rods:
   1. Unless otherwise indicated on the Drawings, install bars and rods perpendicular to the concrete surface.
   2. Insert reinforcing bars and all thread rods into adhesive in accordance with manufacturer's recommended procedures.
   3. Confirm that insert has reached the designated embedment in the concrete, and that adhesive completely surrounds the embedded portion.
   4. Securely brace bars and all thread rods in place to prevent displacement while the adhesive cures. Bars and rods displaced during curing will be considered damaged and replacement will be required.
   5. Clean excess adhesive from the mouth of the hole.

D. Curing and loading:
   1. Provide and maintain curing conditions recommended by the adhesive manufacturer for the period required to fully cure the adhesive at the temperature of the concrete.
   2. Do not disturb or load bonded embeds until manufacturer's recommended cure time, based on temperature of the concrete, has elapsed.

## 3.05 POST-INSTALLATION ACTIVITIES

A. Do not bend bars or all thread rods after bonding to the concrete, unless accepted in advance by the Engineer.

B. Attachments to all thread rods:
   1. After assemblies to be connected are placed, install nuts and washers for threaded rods as indicated on the Drawings.
   2. Draw nuts down tight, using practices specified for "snug tight" installation of bolts in steel to steel connections.

## 3.06 FIELD QUALITY CONTROL

A. Provide field quality control over the Work of this Section as specified in Section 01450 - Quality Control.

B. Do not allow work described in this Section to be performed by individuals who do not hold the specified certifications and who have not completed the specified job site training.

C. Manufacturer's services:
   1. Before beginning installation, furnish adhesive manufacturer's technical representative to conduct on-site training in proper storage and handling of adhesive, drilling and cleaning of holes, and preparation and installation of reinforcing bars and all thread rods:
      a. Provide notice of scheduled training to the Engineer and to special inspector(s) not less than 10 working days before training occurs. Engineer and special inspector may attend training sessions.
   2. Submit record, signed by the manufacturer's technical representative, listing Contractor's personnel who completed the training. Only qualified personnel who have completed manufacturer's on-site training shall perform installations.

D. Field inspections and testing:
   1. Hole drilling and preparation.
   2. Results: Submit records of inspections and testing to the Engineer by electronic copies within 24 hours after completion.

## 3.07 FIELD QUALITY ASSURANCE

A. Provide field quality assurance over the Work of this Section as specified in Section 01450 - Quality Control.

B. Special inspections, special tests, and structural observation:
   1. Provide as specified in Section 01455 - Regulatory Quality Assurance.
   2. Frequency of inspections:
      a. Unless otherwise indicated on the Drawings or in this Section, provide periodic special inspection as required by the Evaluation Report for the product installed.
      b. Provide continuous inspection for the initial installation of each type and size of adhesive bonded reinforcing bar and all thread rod. Subsequent installations of the same anchor may be installed with periodic inspection as defined in subsequent paragraphs.
      c. Provide continuous inspection of drilling, cleaning and bonding activities for bars and rods installed in horizontal and upwardly inclined positions.
   3. Preparation:
      a. Review Drawings and Specifications for the Work to be observed.
      b. Review adhesive manufacturer's MPII and recommended installation procedures.
      c. Review Evaluation Report "Conditions of Use" and "Special Inspection" requirements.

4. Inspection: Periodic:
    a. Initial inspection. Provide an initial inspection for each combination of concrete and reinforcing bar strength or concrete strength and all thread rod material being installed. During initial inspection, observe the following for compliance with the installation requirements:
        1) Concrete: Class (minimum specified compressive strength) and thickness.
        2) Environment: Temperature conditions at work area, and moisture conditions of concrete and drilled hole.
        3) Holes: Locations, spacing, and edge distances; verification of drill bit compliance with requirements; cleaning equipment and procedures; cleanliness of hole. Before adhesive is placed, confirm that depth and preparation of holes conforms to the requirements of the Contract Documents, the MPII, and the “Conditions of Use” listed in the Evaluation Report.
        4) Adhesive: Product manufacturer and name; lot number and expiration date; temperature of product at installation; installation procedure. Note initial set times observed during installation.
        5) Reinforcing bars and all thread rods: Material diameter and length; steel grade and/or strength; cleaning and preparation; cleanliness at insertion; minimum effective embedment provided.
    b. Subsequent inspections: Subsequent installations of the same reinforcing bars or all thread rods may be performed without the presence of the special inspector, provided that:
        1) There is no change in personnel performing the installation, the general strength and characteristics of the concrete receiving the inserts, or the reinforcing bars and all thread rods being used.
        2) For ongoing installations, the special inspector visits the site at least once per day during each day of installation to observe the work for compliance with material requirements and installation procedures.
5. Inspection: Continuous:
    a. Make observations as described under “Inspection - Periodic, Initial Inspection” during drilling, cleaning, and bonding activities for all bars and rods installed.
6. Records of inspections:
    a. Provide a written record of each inspection using forms acceptable to the Engineer and to the Building Official.
    b. Submit electronic copies of inspection reports to the Engineer within 24 hours after completion of inspection.

END OF SECTION

# SECTION 03071

# EPOXIES

## PART 1 GENERAL

### 1.01 SUMMARY

A. Section includes:
   1. Epoxy.
   2. Epoxy gel.
   3. Epoxy bonding agent.

### 1.02 REFERENCES

A. ASTM International (ASTM):
   1. C881 - Standard Specification for Epoxy-Resin-Base Systems for Concrete.
   2. C882 - Standard Test Method for Bond Strength of Epoxy-Resin Systems Used with Concrete by Slant Shear.
   3. D638 - Standard Test Method for Tensile Properties of Plastics.
   4. D695 - Standard Test Method for Compressive Properties of Rigid Plastics.

B. NSF International (NSF):
   1. 61 - Drinking Water System Components - Health Effects.

### 1.03 SUBMITTALS

A. Submit as specified in Section 01330 - Submittal Procedures.

B. Product data: Submit manufacturer's data completely describing epoxy materials:
   1. Submit evidence of conformance to ASTM C881. Include manufacturer's designations of Type, Grade, Class, and Color.
   2. Submit documentation that materials meet or exceed the specified strength and performance characteristics. Indicate test methods and test results.

C. Quality control Submittals:
   1. Manufacturer's installation instructions.

## PART 2 PRODUCTS

### 2.01 DESIGN AND PERFORMANCE CRITERIA

A. Performance requirements:
   1. Provide epoxy materials that are new.
   2. Store and use products within limitations in accordance with the manufacturer.
   3. Perform and conduct Work of this Section in a neat, orderly manner.

## 2.02 MATERIALS

A. General:
   1. Moisture tolerant, water-insensitive, two-component epoxy resin adhesive material containing 100 percent solids, and meeting or exceeding the performance properties specified when tested in accordance with the standards specified.

B. Epoxy: Low viscosity product in accordance with ASTM C881; Types I, II, and IV; Grade 1; Class C, except as modified in this Section:
   1. Manufacturers: One of the following, or equal:
      a. Dayton Superior, Unitex Pro-Poxy 100.
      b. Master Builders Solutions/Sika, MasterInject 1380.
      c. Sika Corporation, Sikadur 35 Hi-Mod LV.
   2. Required properties:

**Table 1. Material Properties - Epoxy**

| Property | Test Method | Required Results ("neat") |
|---|---|---|
| Tensile Strength (7-day) | ASTM D638 | 7,000 pounds per square inch, minimum. |
| Compressive Yield Strength (7-day) | ASTM D695 | 10,000 pounds per square inch, minimum. |
| Bond Strength (harded concrete to harded concrete after 2-day cure) | ASTM C882 | 1,000 pounds per square inch, minimum. Concrete failure before failure of epoxy. |
| Viscosity (mixed) | | 250 to 550 centipoise |

Notes:
(1) Testing results are for materials installed and cured at a temperature between 72 and 78 degrees Fahrenheit for 7 days, unless otherwise noted.

C. Epoxy gel: Non-sagging product in accordance with ASTM C881, Types I and IV, Grade 3, Class C:
   1. Manufacturers: One of the following, or equal:
      a. Dayton Superior, Sure Anchor J50.
      b. Master Builders Solutions/Sika, MasterEmaco ADH 327.
      c. Sika Corp., Sikadur 31, Hi-Mod Gel.
   2. Required properties:

**Table 2. Material Properties - Epoxy Gel**

| Property | Test Method | Required Results ("neat") |
|---|---|---|
| Tensile Strength (7-day) | ASTM D638 | 2,000 pounds per square inch, minimum. |
| Compressive Yield Strength (7-day) | ASTM D695 | 8,000 pounds per square inch, minimum. |
| Bond Strength (14-day) | ASTM C882 | 1,500 pounds per square inch, minimum. |

Notes:
(1) Testing results are for materials installed and cured at a temperature between 72 and 78 degrees Fahrenheit for 7 days, unless otherwise noted.

D. Epoxy bonding agent: Non-sagging product in accordance with ASTM C881, Type II, Grade 2, Class C:
   1. Manufacturers: One of the following, or equal:
      a. Dayton Superior, Sure Bond J58.
      b. Master Builders Solutions/Sika, MasterEmaco ADH 326.
      c. Sika Chemical Corp., Sikadur 32 Hi-Mod LPL.
   2. Required properties:

| Table 3. Material Properties - Epoxy Bonding Agent | | |
|---|---|---|
| **Property** | **Test Method** | **Required Results** |
| Tensile Strength (7-day) | ASTM D638 | 3,300 pounds per square inch, minimum. |
| Compressive Yield Strength (7-day) | ASTM D695 | 8,300 pounds per square inch, minimum. |
| Bond Strength (14-days) | ASTM C882 | 1,800 pounds per square inch, minimum. Concrete failure before failure of epoxy bonding agent. |
| Pot Life | - | Per manufacturer's recommendations. |
| Notes:<br>(1) Testing results are for materials installed and cured at a temperature between 72 and 78 degrees Fahrenheit for 7 days, unless otherwise noted. | | |

## PART 3 EXECUTION

### 3.01 INSTALLATION

A. Install and cure epoxy materials in accordance with the manufacturer's installation instructions.

B. Epoxy:
   1. Apply in accordance with the manufacturer's installation instructions.

C. Epoxy gel:
   1. Apply in accordance with the manufacturer's installation instructions.
   2. Use for vertical or overhead work, or where high viscosity epoxy is required.
   3. Epoxy gel used for vertical or overhead work may be used for horizontal work.

D. Epoxy bonding agent:
   1. Apply in accordance with the manufacturer's installation instructions.
   2. Will not be required for filling form tie holes or for normal finishing and patching of similar sized small defects.

END OF SECTION

**SECTION 03301**

**CONCRETE WORK**

**TABLE OF CONTENTS**


**PART 1 GENERAL ..... 2**

1.01 SUMMARY ..... 2
1.02 REFERENCES ..... 2
1.03 TERMINOLOGY ..... 3
1.04 SUBMITTALS ..... 4
1.05 QUALITY ASSURANCE ..... 6
1.06 DELIVERY, STORAGE, AND HANDLING ..... 7
1.07 PROJECT CONDITIONS ..... 7
1.08 SEQUENCING AND SCHEDULING ..... 7

**PART 2 PRODUCTS ..... 7**

2.01 FORMWORK ..... 7
2.02 JOINT MATERIALS ..... 9
2.03 REINFORCEMENT ..... 9
2.04 SOURCE QUALITY CONTROL ..... 10
2.05 CONCRETE MIXES ..... 10
2.06 CONCRETE BATCHING AND MIXING EQUIPMENT ..... 14
2.07 CONCRETE FINISHING AND CURING MATERIALS ..... 15

**PART 3 EXECUTION ..... 15**

3.01 GENERAL ..... 15
3.02 FORMING ..... 16
3.03 PLACING CONCRETE REINFORCEMENT, EMBEDS, AND ACCESSORIES ..... 18
3.04 BATCHING, MIXING, TRANSPORTING, AND DELIVERING CONCRETE ..... 19
3.05 CONVEYING, DEPOSITING, AND CONSOLIDATING CONCRETE ..... 21
3.06 FINISHING CONCRETE ..... 23
3.07 CURING AND PROTECTING CONCRETE ..... 23
3.08 JOINTS AND JOINT PREPARATION ..... 26
3.09 TOLERANCES ..... 27
3.10 FIELD QUALITY CONTROL BY CONTRACTOR ..... 27
3.11 FIELD QUALITY CONTROL BY OWNER ..... 28
3.12 NON-CONFORMING WORK ..... 29

## PART 1 GENERAL

### 1.01 SUMMARY

A. Section includes:
   1. Concrete formwork, concrete accessories, concrete reinforcement, batching and mixing of concrete to be cast-in-place, concrete placement and curing, and tooled concrete finishes.

### 1.02 REFERENCES

A. American Concrete Institute (ACI):
   1. CODE-318 - Building Code Requirements for Structural Concrete and Commentary.
   2. MNL-66 - ACI Detailing Manual.
   3. PRC-305 - Specification for Hot Weather Concreting.
   4. PRC-306 - Standard Specification for Cold Weather Concreting.
   5. SPEC-117 - Standard Specifications for Tolerances for Concrete Construction and Materials.
   6. SPEC-301 - Specifications for Concrete Construction.

B. ASTM International (ASTM):
   1. A615 - Standard Specification for Deformed and Plain Carbon-Steel Bars for Concrete Reinforcement.
   2. A706 - Standard Specification for Deformed and Plain Low-Alloy Steel Bars for Concrete Reinforcement.
   3. A1064 - Standard Specification for Carbon-Steel Wire and Welded Wire Reinforcement, Plain and Deformed, for Concrete.
   4. C31 - Standard Practice for Making and Curing Concrete Test Specimens in the Field.
   5. C33 - Standard Specification for Concrete Aggregates.
   6. C39 - Standard Test Method for Compressive Strength of Cylindrical Concrete Specimens.
   7. C94 - Standard Specification for Ready-Mixed Concrete.
   8. C138 - Standard Test Method for Density (Unit Weight), Yield, and Air Content (Gravimetric) of Concrete.
   9. C143 - Standard Test Method for Slump of Hydraulic-Cement Concrete.
   10. C150 - Standard Specification for Portland Cement.
   11. C156 - Standard Test Method for Water Loss from a Mortar Specimen Through Liquid Membrane-Forming Curing Compounds for Concrete.
   12. C171 - Standard Specification for Sheet Materials for Curing Concrete.
   13. C172 - Standard Practice for Sampling Freshly Mixed Concrete.
   14. C173 - Standard Test Method for Air Content of Freshly Mixed Concrete by the Volumetric Method.
   15. C260 - Standard Specification for Air-Entraining Admixtures for Concrete.
   16. C309 - Standard Specification for Liquid Membrane-Forming Compounds for Curing Concrete.
   17. C311 - Standard Test Methods for Sampling and Testing Fly Ash or Natural Pozzolans for Use in Portland-Cement Concrete.
   18. C494 - Standard Specification for Chemical Admixtures for Concrete.

19. C618 - Standard Specification for Coal Fly Ash and Raw or Calcined Natural Pozzolan for Use in Concrete.
20. C1064 - Standard Test Method for Temperature of Freshly Mixed Hydraulic-Cement Concrete.
21. C1218 - Standard Test Method for Water-Soluble Chloride in Mortar and Concrete.
22. C1260 - Standard Test Method for Potential Alkali Reactivity of Aggregates (Mortar-Bar Method).
23. C1293 - Standard Test Method for Determination of Length Change of Concrete Due to Alkali-Silica Reaction.
24. C1602 - Standard Specification for Mixing Water Used in the Production of Hydraulic Cement Concrete.
25. C1778 - Standard Guide for Reducing the Risk of Deleterious Alkali-Aggregate Reaction in Concrete.
26. D1751 - Standard Specification for Preformed Expansion Joint Filler for Concrete Paving and Structural Construction (Nonextruding and Resilient Bituminous Types).
27. D1752 - Standard Specification for Preformed Sponge Rubber Cork and Recycled PVC Expansion Joint Fillers for Concrete Paving and Structural Construction.
28. D2103 - Standard Specification for Polyethylene Film and Sheeting.

C. Concrete Reinforcing Steel Institute (CRSI):
   1. Manual of Standard Practice.

## 1.03 TERMINOLOGY

A. The words and terms listed below, are not defined terms that require initial capital letters, but, when used in this Section have the indicated meaning:
   1. Alkali load: Amount of alkalies contributed by the cement in a concrete mixture, expressed in lb/yd$^3$, and calculated by multiplying the cement content of the concrete in lb/yd$^3$ by the alkali content of the Portland cement; or the Portland cement portion of a blended cement, divided by 100.
   2. Average daily temperature: The average of the highest and lowest temperatures during a 24-hour period from midnight to midnight.
   3. Cementitious materials: Portland cement and supplementary cementitious materials.
   4. Green concrete: Concrete whose current compressive strength is less than 100 percent of the minimum specified compressive strength, f'c.
   5. Hand mixed concrete: Concrete mixed at or near the point of placement using shovels, hoes, or other similar manually operated tools.
   6. Hot weather: A period when project conditions such as low humidity, high temperature, solar radiation, and high winds promote rapid drying of freshly placed concrete.
   7. Neat cement grout: Grout made from a mixture of Portland cement and water.
   8. Supplementary cementitious material: Inorganic material such as fly ash, natural pozzolans, silica fume, or slag cement that reacts pozzolanically or hydraulically.

## 1.04 SUBMITTALS

A. Furnish Submittals as specified in Section 01330 - Submittal Procedures.

B. Product data:
   1. Formwork:
      a. Formwork facing materials. Data on facing materials for concrete exposed to view in the finished work, if different from that specified in this Section.
      b. Form release agent. Manufacturer's name and catalog data, including materials safety datasheet and documentation of suitability for use in contact with potable water.
   2. Joint materials:
      a. Preformed expansion joint material: Manufacturer's name and catalog data with documentation of conformance to materials standards specified for each type and thickness of material.
   3. Reinforcement:
      a. Mill certificates for each heat of steel provided.
      b. Reinforcement placement drawings:
         1) Show anchor bolt locations based on anchor bolt templates for approved equipment.
      c. Concrete bar supports:
         1) Precast concrete bar supports ("dobies"): Manufacturer's product data indicating compression strength of concrete supports and material used for tie wires.
         2) Wire chairs and slab bolsters: Manufacturer's product data.
   4. Concrete materials:
      a. Cement:
         1) Mill certificate in accordance with ASTM C150. Include "Type" and results of testing for alkali content measured as equivalent alkalies.
      b. Supplementary cementitious materials:
         1) Fly Ash: Identify source and provide testing results documenting compliance with ASTM C618 and any additional requirements of this Section.
      c. Aggregates:
         1) Type, pit or quarry location, and producer's name.
         2) Commercial laboratory test reports for samples of each aggregate proposed for use. Tests shall have been made not more than 24 months prior to the date of the Submittal:
            a) Fine aggregate: Gradation analysis, specific gravity, reactivity, and reports of deleterious materials to document compliance with ASTM C33.
            b) Coarse aggregate: Gradation analysis, specific gravity, soundness, reactivity, and reports of deleterious materials to document compliance with ASTM C33 for each size used.
      d. Admixtures:
         1) Manufacturer's catalog cuts and product data indicating compliance with the standards specified.

5. Concrete mixes: Submit full details, including:
    a. Mix proportions measured by both weight and volume and concrete properties for each class of concrete proposed for use:
        1) Information on correction of batching for varying moisture contents of fine aggregate.
    b. Data to establish the average compressive strength:
        1) If established by field test records, submit:
            a) Product and test data for the materials used in the mix.
            b) Actual mix proportions used in the mix producing the record.
            c) Field test data for slump, air content, and 28-day compressive strength. Include not less than 15 tests in accordance with ACI SPEC-301.
        2) If established by testing of trial batches, submit:
            a) Confirmation that the materials and proportions used in the trial batches are those that will be provided for the mix.
            b) Mix test data for slump, air content, and 28-day compressive strength.
        3) For either method, include calculations for:
            a) Standard deviation: Calculated in accordance with ACI SPEC-301 requirements.
            b) Required average compression strength (f'cr) using the standard deviation calculated in accordance with ACI SPEC-301 requirements.
            c) Statement demonstrating that the average compression strength from field test records or from trial batch testing for each mix ($f'c_{avg}$) exceeds the required average compressive strength (f'cr) for that mix.
    c. Data to establish alkali load:
        1) Determine and include the alkali load of the proposed mix.
    d. Data to establish chloride content:
        1) Submit test results showing that the concrete mix contains water-soluble chloride ion content contributed from the constituents including water, aggregates, cementitious materials, and admixtures is less than the limit specified in Table B of this Section. Test shall be performed in accordance with ASTM C1218 at age between 28 and 42 days after mixing.
6. Concrete finishing and curing materials:
    a. Manufacturer's name and product datasheets.

C. Shop Drawings:
    1. Reinforcement:
        a. Submit Drawings showing bending and placement of reinforcement:
            1) Drawings shall be in accordance with ACI MNL-66.
            2) Clearly show placement, shapes, and dimensions of each bar listed in the bill of materials, including additional reinforcement at corners and openings required by details in the Contract Documents.
            3) Show splice locations and bar lengths reflecting the Contractor's intended placement sequence.

D. Samples:
    1. Form ties: If requested by the Engineer.

2. Concrete bar supports: If requested by the Engineer, provide samples of:
   a. Precast concrete bar supports (“dobies”).
   b. Wire chairs and slab bolsters.

E. Procedures:
1. Contractor’s plans for production, placement, finishing, curing, protection, and temperature monitoring of concrete during the following environmental conditions:
   a. Hot weather.

F. Project record documents:
1. For the following items, note location of concrete in the structure, and include tag numbers of associated cylinders for compression strength tests.
2. Concrete delivery tickets. Submit copies of concrete delivery tickets within 24 hours after delivery.
3. Field test reports: Results of field-testing for slump, temperature, unit weight, and air entrainment.
4. Testing laboratory reports for compression strength.

G. Notifications:
1. Modifications to concrete mixes:
   a. Submit notification of any adjustments to mixture proportions and any changes in materials made during the course of the Work for the Engineer’s review.
   b. Include details of the changes and supporting documentation.
2. Joint locations:
   a. Where joint locations other than those indicated on the Drawings are requested, submit proposed locations for the Engineer’s review.
   b. Provide Drawings showing proposed joint locations with joint types labeled and joint details referenced.
3. Reinforcement placement: Where necessary to move reinforcement beyond the specified placing tolerances to avoid interference, submit the proposed arrangement for the Engineer’s review.
4. Concrete placements: Submit notification of readiness for each concrete placement at least 24 hours in advance.
5. Concrete repairs:
   a. Where concrete surfaces or sections exhibit defects after removal of forms, submit description of existing conditions and of proposed repair procedures and materials.
   b. Include photos of existing conditions with Submittal.

## 1.05 QUALITY ASSURANCE

A. Tolerances on concrete construction: In accordance with ACI SPEC-117 unless more stringent requirements are specified in the Contract Documents:
1. See Drawings for additional notes on special concrete tolerances required for equipment included in the Work.

B. Concrete mixtures:
   1. Ensure that concrete produced has the specified characteristics in the freshly mixed state, and that those are maintained during transport and delivery and to the point of final placement.

## 1.06 DELIVERY, STORAGE, AND HANDLING

A. Deliver, store, and handle concrete materials to prevent damage and inclusion of foreign substances.

B. Deliver reinforcing steel bundled and tagged with identifying tags marked in a legible manner with waterproof markings showing the same designations as indicated on the submitted Shop Drawings:
   1. Store off the ground and protect from moisture, dirt, oil, and other injurious contaminants.

C. Protect concrete accessories from weather and direct exposure to sunlight before installation.

## 1.07 PROJECT CONDITIONS

A. Environmental requirements:
   1. Hot weather concreting: Construct in accordance with ACI PRC-305 during conditions when the ambient air temperature is above 90 degrees Fahrenheit.
   2. Conditions that promote rapid drying of freshly placed concrete, such as low humidity, high temperature, and wind: Take corrective action to minimize loss of water from the concrete.

## 1.08 SEQUENCING AND SCHEDULING

A. Schedule placing of concrete in such a manner that completes any single placing operation to a construction, contraction, or expansion joint as indicated on the Drawings or accepted by the Engineer in advance of the placement.

# PART 2 PRODUCTS

## 2.01 FORMWORK

A. Forms:
   1. Design and performance requirements:
      a. Design and performance of formwork shall be the responsibility of the Contractor, subject to the requirements of the Contract Documents.
      b. Design, construct, and brace formwork to:
         1) Carry all loads applied or transmitted, including the pressure resulting from placement and vibration of plastic concrete.
         2) Remain tight to prevent loss of mortar.
         3) Maintain specified tolerances and provide finished surfaces as specified.

c. Maximum deflection of facing materials and supporting members on surfaces exposed to view in the finished work: 0.0042 times the clear span (span/240).
d. Maximum deviation from alignment (horizontal or vertical): In accordance with ACI SPEC-117.

2. Form facing materials:
   a. Surfaces exposed to view in the finished work:
      1) Facing materials shall produce a smooth, uniform texture on the concrete.
      2) Do not use materials with raised grain, tears, worn edges, patches, dents, or other similar defects.
      3) Acceptable materials: Plywood with “C” or better face, plastic-faced plywood, tempered concrete form grade hardboard, or steel.
   b. Surfaces not exposed to view in the finished work:
      1) Special form facing material not required.
3. Forms for chamfers and keyways:
   a. Uniform steel, plastic, or lumber section of dimensions shown or specified.
   b. Provide adequate stiffness and support to maintain a true line at the concrete surface.
   c. Treated to eliminate bond with the concrete if required to produce a smooth, uniform, and undamaged finish upon removal.

B. Form ties:
1. General:
   a. Provide form ties fabricated by recognized manufacturer of concrete forming equipment and suitable for use with the forming system selected.
   b. Provide ties that accurately tie, lock, and spread forms:
      1) Do not use wire ties or wood spreaders.
   c. Provide form ties manufactured such that, when forms are removed, the tie leaves no metal or other material within 1-1/2 inches of the surface of the concrete.
   d. Do not allow tie holes through forms for ties to leak during concrete placement.
2. Cone snap ties: Tie with removable plastic cone leaving a tapered depression having a minimum diameter of 1 inch at the surface of the concrete and a depth of 1-1/2 inches below the surface.

C. Dry-pack mortar for filling cone snap tie holes:
1. Proportioned mix of 1 part of Portland cement to 1 part plaster sand with potable water added to provide a stiff consistency that can be driven into holes and properly compacted.
2. For repairs in concrete exposed to view in the finished work, mix repair mortar using the same cement and sand as that used for the concrete being patched:
   a. Mix a trial batch and confirm color compatibility with the surrounding material.
   b. Adjust color to match that of the surrounding concrete by adding white Portland cement if necessary.
3. Admixtures or additives to mortar are not permitted.

D. Form release agent: Commercially manufactured, non-staining formwork release agent that will prevent absorption of water by the formwork and will prevent bond between the formwork and the concrete:
   1. Form release agent shall comply with local air quality management regulations.

## 2.02 JOINT MATERIALS

A. Synthetic sponge rubber expansion joint material:
   1. Elastic sponge rubber compound in accordance with ASTM D1752, Type I.
   2. Concrete-gray color unless otherwise noted.
   3. Thickness: As indicated on the Drawings.
   4. Manufacturers: One of the following or equal:
      a. Williams Products Inc., Everlastic 1300.
      b. WR Meadows, Seal Tight Sponge Rubber Expansion Joint.

B. Bituminous fiber expansion joint material:
   1. Thickness: To match joint width indicated on the Drawings.
   2. Asphalt-impregnated fiberboard in accordance with ASTM D1751.
      a. Manufacturers: One of the following or equal:
         1) Durajoint.
         2) W.R. Meadows, SealTight Fibre Expansion Joint.

C. Sealants and caulking: As specified in the Drawings.

## 2.03 REINFORCEMENT

A. Materials:
   1. Deformed bars: In accordance with ASTM A615 Grade 60 and ASTM A706 where specifically indicated on the Drawings.
   2. Welded wire fabric: Sheets of plain wire in accordance with ASTM A1064.
   3. Bar supports:
      a. Over ground or “mud mat”:
         1) Precast concrete blocks with cast-in annealed steel tie wires, 16 gauge or heavier:
            a) Compressive strength of blocks equal to or exceeding the compressive strength of the surrounding concrete.
         2) Height as required for minimum 3 inches of clear concrete cover below reinforcement.
         3) Minimum block “footprint” of 4 square inches, or as required to supporting load from reinforcement while maintaining the required concrete cover.
      b. Wire supports: Class 3, bright basic wire with galvanized coating in accordance with CRSI Manual of Standard Practice.
   4. Tie wire: Annealed steel.

B. Fabrication:
   1. Cut and cold-bend bars in accordance with provisions of ACI MNL-66 and ACI CODE-318.
   2. Fabricate reinforcement to the tolerances in accordance with ACI SPEC-117.
   3. Provide bars free from defects and kinks and from bends not indicated on the Drawings.

## 2.04 SOURCE QUALITY CONTROL

A. Submit documentation that the proposed concrete mixes will conform to the requirements of this Section and will produce concrete having the required proportions and properties specified:
   1. Do not place concrete until the design for that mix and the results of any trial batch testing have been accepted by the Engineer.
   2. If the Engineer requires changes to the mix design, modify mixes within limits set forth in this Section and submit new mix design for the Engineer's review.

B. After acceptance, do not change mixes or mix proportions without prior acceptance by the Engineer:
   1. Exception: At all times, adjust batching of water to compensate for free moisture content of aggregates. Total water content in the mix shall not exceed that specified.

C. If there is change in source of cement or aggregate, or if there is a significant change in the characteristics or quality of any constituent material received from a source accepted to supply materials, submit new design mixes for each class of concrete affected.

D. Testing of materials and mixes before placement to demonstrate that they comply with the requirements of this Section shall be at the Contractor's expense.

## 2.05 CONCRETE MIXES

A. Constituent materials:
   1. Cement:
      a. Portland cement: In accordance with ASTM C150, Type I or II:
         1) Cement for finishes or repairs: Provide cement from same source and of same type as concrete to be finished.
   2. Supplementary cementitious materials (SCM):
      a. Fly ash:
         1) In accordance with ASTM C618, Class F.
         2) Sampling and testing: In accordance with ASTM C311.
         3) Loss on ignition: Not to exceed 4 percent.
   3. Aggregates:
      a. General:
         1) Provide normal weight concrete aggregates that are sound, uniformly graded, and free of deleterious material in excess of the amounts specified.
         2) Do not use aggregate made from recycled materials such as crushed and screened hydraulic-cement concrete, brick, or other construction waste.
         3) Obtain aggregate from source that is capable of providing uniform quality, moisture content, and grading during any single day's operations.
         4) Alkali-silica reactivity:
            a) Provide fine and coarse aggregate classified as aggregate-reactivity class of R0 in accordance with ASTM C1778 and with expansion not greater than 0.10 percent

at 14 days when tested in accordance with ASTM C1260 and not greater than 0.04 percent at 1 year when tested in accordance with ASTM C1293.

b. Fine aggregate:
   1) Provide fine aggregate consisting of clean, natural sand or of sand prepared from crushed stone or crushed gravel.
   2) In accordance with ASTM C33.

c. Coarse aggregate:
   1) Provide coarse aggregate consisting of gravel or crushed stone made up of clean, hard, durable particles free from calcareous coatings, organic matter, or other foreign substances; and in accordance with ASTM C33, Class 4S.
   2) Grading: Unless otherwise specified or accepted in writing by the Engineer, provide the following:
      a) Aggregate for Class A, and C, and PM Concrete: ASTM C33, Size Number 57.
      b) Aggregate for Class CE Concrete: ASTM C33, Size Number 8.
      c) Where a combination of 2 or more sizes of coarse aggregate are used, the gradation of the blend shall conform to the grading requirements in accordance with ASTM C33 for the size number specified.

4. Water:
   a. Water for concrete mixes, for washing aggregate, and for curing concrete: Potable water, clean and free from oil and deleterious amounts of alkali, acid, organic matter, or other substances.
   b. Do not exceed the optional chemical limits of ASTM C1602.

5. Admixtures:
   a. General:
      1) Do not use admixtures, except those specified, unless written authorization has been obtained from the Engineer.
      2) Admixtures shall be compatible with concrete and other admixtures. Admixtures (other than fly ash) shall be the products of a single manufacturer to ensure compatibility.
      3) Do not use admixtures containing chlorides in excess of 0.5 percent by weight of cement when calculated as chloride ion.
   b. Air entraining admixture: In accordance with ASTM C260.
   c. Water reducing admixture:
      1) In accordance with ASTM C494, Type A or Type D.
      2) Not containing air-entraining agents.
   d. High range water reducing admixtures/plasticizing admixtures:
      1) High-range water reducing admixtures: In accordance with ASTM C494, Type F.
      2) Use shall produce non-segregating concrete mixture with little bleeding that remains in a plastic state for not less than 2 hours.

B. Mix design and proportioning:
   1. Proportion mixes to provide compression strength, workability, and durability as specified in this Section.
   2. Submit documentation that the proposed mixes will conform to the requirements of this Section and will produce concrete having the required properties.

3. Compression strength:
   a. Proportion each concrete mix to provide the required average compressive strength (f'cr) determined in accordance with the provisions of ACI SPEC-301.
   b. Determine required average compressive strength (f'cr) for each class of concrete using the specified compressive strength of the mix, f'c, and the standard deviation determined in accordance with ACI SPEC-301:
      1) Establish the standard deviation in accordance with ACI SPEC-301 and based on either field test records or based on trial batches.
      2) Documentation of standard deviation based on field test records:
         a) Calculate standard deviation in accordance with ACI SPEC-301 procedures using test records that:
            (1) Represent materials, quality control procedures, and conditions similar to those expected for this Work.
            (2) Do not include provisions for materials and proportions that are more restrictive than the materials proposed for use in this Work.
            (3) Represent a mix proportioned to provide a specified compressive strength (f'c) within 1,000 pounds per square inch of that specified for the corresponding mix in this Section.
      3) Documentation of standard deviation based on trial batches plus empirical code requirements:
         a) When records including at least 15 consecutive tests that span a period of at least 45 calendar days are not available, determine required average compressive strength (f'cr) from Table A:

| **Table A: Required Average Compressive Strength** | |
|---|---|
| **Specified Compressive Strength f'c (pounds per square inch)** | **Required Average Compressive Strength f'cr (pounds per square inch)** |
| Less than 3,000 | f'c + 1,000 |
| 3,000 to 5,000 | f'c + 1,200 |

4. Workability:
   a. Provide concrete with workability and consistency that can be readily worked into corners and angles of forms and around reinforcement without excessive vibration and without permitting materials to segregate or free water to collect on the surface.
5. Cement content:
   a. Cementitious materials content: Conform to values specified in Table B of this Section.
   b. Ratio of water to cementitious materials:
      1) Conform to values specified in Table B of this Section.
      2) Total water, including that from moisture content of aggregates and admixtures, shall not exceed that specified in Table B of this Section.

6. Supplementary Cementitious Materials:
    a. Fly ash:
        1) Maximum of 15percent by weight of total weight of cementitious materials (cement plus fly ash).
        2) Other supplemental cementitious materials shall not be used without prior acceptance by the Engineer.
7. Aggregates:
    a. Ratio of coarse aggregate to fine aggregate: Not less than 1.0 or more than 2.0 for all concrete classes, with exception of Class CE.
8. Admixtures:
    a. Use in accordance with manufacturer's instructions.
    b. Air entraining admixture:
        1) Provide concrete with entrained air content indicated in Table B of this Section and consisting of evenly dispersed air bubbles.
    c. Water reducing admixture:
        1) Required in all concrete mixes.
        2) No decrease in cementitious materials content is permitted as a result of use of water-reducing admixture.
    d. High range water reducing admixture/plasticizing admixture:
        1) Proportion for a slump of 2 to 4 inches before the admixture is added, and a maximum slump of 8 inches after the admixture is added.
9. Concrete mix design requirements by class:
    a. Provide concrete mixes for each "class" specified in this Section and indicated in Table B of this Section.
    b. Use each class at the locations specified in the following paragraphs or indicated on the Drawings:
        1) "Class A" concrete: General use. Use at all locations unless otherwise indicated on the Drawings or listed in the following paragraphs.
        2) "Class C" concrete: May be used as fill for unauthorized excavation, for thrust blocks and ground anchors for piping, for bedding of pipe, and elsewhere as indicated on the Drawings.
        3) "Class CE" concrete: Use for electrical conduit and duct bank encasements.
        4) Class PM concrete: Use for concrete pavement, cart paths, curbs, gutters, and sidewalks.
    c. Pumped concrete: Provide a separate mix design and substantiation testing for each "class" to be placed by pumping.

| Table B: Concrete Classes | | | | | | | | | |
|---|---|---|---|---|---|---|---|---|---|
| **Concrete Class** | **Minimum Specified Compressive Strength at 28 days, f'c(1) (pounds per square inch)** | **Ratio of water to cementitious materials(2,3) (minimum - maximum)** | **Cementitious Materials Content(3) (pounds per cubic yard of concrete by weight)** | **Cement Type** | **Maximum Chloride Content (percent by weight of cement)** | **Maximum Coarse Aggregate Size(4)** | **Air Entrainment (percent) (N/R: not required)** | **Admixtures Required(5)** | **Slump Range (inches)** |
| A | 4,000 | 0.40 to 0.45 | 535 to 575 | ASTM C150, Type II(MH) | 0.30 | 57 | 6±1.5 | AEA | 2 to 4 |
| C | 2,500 | 0.62 max. | 423 min. | ASTM C150, Type II(MH) | No limit | 57 | N/R | AEA WRA | 3 to 6 |
| CE | 2,500 | 0.62 max. | 423 min. | ASTM C150, Type II(MH) | No limit | 8 | N/R | AEA WRA CA | 3 to 6 |
| PM | 5,000 | 0.40 | 535 to 575 | ASTM C150, Type II(MH) | 0.15 | 57 | 5+1.5 | AEA WRA | 3 to 6 |

Notes:

(1) At locations where concrete will not be subjected to load from other elements of the structure or from the Contractor's placing operations, maximum time period for achievement of specified compressive strength may be extended to 56 days when accepted by the Contractor's Engineer.

(2) W/C Ratio = Ratio of water to cementitious materials (Portland cement plus supplemental cementitious material) by weight Include weight of admixtures in the water content of the mix when the quantity of the admixtures exceeds 10 ounces per 100 pounds of cement.

(3) Provide mix within the range of W/C ratio and cementitious materials content indicated.

(4) Size number in ASTM C33, Table 2.

(5) Admixtures are designated as follows:

AEA: Air entraining admixture.

CA: Coloring admixture.

HRWR: High-range water reducing admixture.

WRA: Water reducing admixture.

## 2.06 CONCRETE BATCHING AND MIXING EQUIPMENT

A. Provide equipment and facilities for accurate measurement and control of materials.
   1. At all times, maintain proportions of concrete mix within specified limits.
   2. Control and adjust batch weights to secure maximum yield.

B. Measuring or weighing equipment:
   1. Furnish apparatus for weighing aggregates and cementitious materials that is suitably designed and constructed for this purpose.

2. Devices shall bear the current and valid seal of the Sealer of Weights and Measures in the Authority having jurisdiction.
3. Furnish devices capable of providing successive quantities of individual materials measured to within 2 percent of desired amount of that material.

C. Mixing equipment:
1. Mixes shall be ready-mix or transit-mixed concrete in accordance with ASTM C94:
   a. Hand-measured or hand-mixed batches shall not be used.
   b. On-site volumetric batching using pre-packaged dry materials shall not be used.
2. Provide equipment capable of combining aggregates, cementitious materials, water, and admixtures into a thoroughly mixed and uniform mass during the time periods specified, and capable of discharging the resulting mixture without segregation.
3. Maintain mixing equipment in good working order. Operate at loads and speeds, and for periods of time recommended by the manufacturer or specified in this Section.

## 2.07 CONCRETE FINISHING AND CURING MATERIALS

A. Evaporation retardant:
1. Manufacturers: One of the following or equal:
   a. Euclid Chemical Co., Eucobar.
   b. Master Builders Solutions/Sika, MasterKure ER 50.

B. Plastic membrane for curing:
1. White polyethylene film in accordance with ASTM C171:
   a. Nominal thickness not less than 0.0040 inches when measured in accordance with ASTM D2103, and thickness at any point not less than 0.0030 inches.
   b. Loss of moisture: Not to exceed 0.055 grams per square centimeter of surface when tested in accordance with ASTM C156.

C. Sprayed membrane curing compound:
1. In accordance with ASTM C309, Type 1D. Clear with fugitive dye.

# PART 3 EXECUTION

## 3.01 GENERAL

A. Preparation:
1. Use construction methods and sequences that allow time for concrete to reach adequate strength to prevent damage to or overstress of the concrete structure or its elements during construction.
2. Locations of construction and expansion joints are indicated on the Drawings:
   a. Make no other joints, except as accepted in advance by the Engineer.

b. Schedule placing of concrete to complete any single placing operation between designated joints.
c. Schedule and sequence placements to allow adequate time for concrete to achieve adequate strength before subsequent placements and loads are applied to the structure.

B. Verification of conditions:
1. Do not place concrete until:
a. Forms have been thoroughly cleaned of dirt and debris, and form release agents have been applied.
b. Forms have been thoroughly checked for alignment, level, strength, and accurate location of reinforcement, joint accessories, and mechanical and electrical inserts or other embedded items.
c. Reinforcement is secure and properly fastened in its correct position.
d. Dowels, bucks, sleeves, hangers, pipes, conduits, anchor bolts, and any other fixtures required to be embedded in concrete have been placed and adequately anchored.
e. Forms are aligned and secured, and loose form ties at construction joints have been retightened.
2. Notify the Engineer in writing of readiness, not just intention, to place concrete in any portion of the Work:
a. Provide this notification in advance of operations, allowing such time as the Engineer deems necessary to make final observation of preparations at location of the concrete placement.
b. Have forms, reinforcement, screeds, anchors, ties, embeds, and inserts in place before notifying the Engineer of readiness for final observations.
3. Do not place concrete until the Engineer has completed final observations of conditions at the placement and has given acceptance to proceed.

## 3.02 FORMING

A. General:
1. Do not use earth cuts as forms for vertical or sloped surfaces unless specifically required by or indicated on the Contract Documents.
2. Joints: Locate joints as indicated on the Drawings:
a. Submit joint locations other than or differing from those indicated on the Drawings for the Engineer’s review before construction.
3. Chamfers:
a. Permanently exposed outside corners: Provide 3/4-inch chamfer.
b. Re-entrant corners:
1) Chamfer not required.
2) Corner may be left square.
c. Edges of formed joints: Chamfer not required except where indicated on the Drawings.
4. Level strips: Install level strips at top of wall concrete placements to maintain true line at horizontal construction joints.

B. Constructing and erecting formwork:
   1. Brace and anchor formwork to ensure vertical and lateral stability and to maintain finish tolerances when subjected to uplift pressures and lateral pressures from plastic concrete:
      a. Ensure that formwork is positioned, braced, and firmly held against previously placed concrete to maintain flush surfaces and to prevent loss or leaking of mortar at construction joints:
         1) At joints with flush surfaces exposed to view, lap contact surface of form a maximum of 1 inch over the previously placed concrete.
      b. Design and construct forms with sufficient strength and stiffness that deflections resulting from loading by plastic concrete will not exceed the surface tolerance limits specified.
      c. Set forming materials in an orderly and symmetrical arrangement, keeping the number of seams to a practical minimum.
      d. Form ties: Tie forms together using cone snap ties placed at not more than 2-foot centers vertically and horizontally.
      e. Construct formwork to permit easy removal without damage to formed surfaces.
      f. Provide temporary openings at the base of column and wall formwork to allow cleaning and inspection immediately before concrete placement.
      g. Cracks, openings, or offsets at joints in formwork: Close those that are 1/16-inch or larger by tightening forms or by filling with acceptable crack filler.
   2. Where forms are reused, clean surfaces of mortar, grout, and foreign materials before coating with form release agent and setting.
   3. Cover formwork surfaces with form release agent to prevent bond with the concrete:
      a. Do not allow form release agent to puddle in the forms.
      b. Do not allow form release agent to contact reinforcement, embeds, or previously placed concrete.
   4. Provide runways supported directly on the formwork for moving equipment and supplies during preparations for concreting:
      a. Do not rest such runways on reinforcement.

C. Embeds, joints, and accessories:
   1. Position pipes, sleeves, conduits, inserts, anchors, castings, and other embedded items in the forms, and anchor to formwork to prevent displacement.
   2. Fill voids in sleeves, pipes, inserts and anchor slots with readily removable material, and seal if required to prevent entry of mortar.
   3. For pipe or conduit runs, position embeds to allow at least 3 inches of clear concrete separation between parallel runs of pipes, conduits or any combination of these items with each other or with reinforcement.

D. Removing formwork:
   1. Remove forms after the specified time for curing and protection has been provided and when operations will not damage concrete.

2. Immediately after forms are removed, carefully examine concrete surfaces:
   a. Report any irregularities in surfaces and finishes to the Engineer.
   b. Where surface repairs are needed, contact the Engineer with description of conditions and description of repair procedures before proceeding with the work.
3. Immediately follow form removal with installation of specified curing materials and procedures.
4. After forms are removed from wall and curing is complete, fill tie holes as follows:
   a. Remove form ties and cones from surfaces.
   b. Roughen cone-shaped tie holes by heavy sandblasting before repair.
   c. Clean and dampen tie holes, maintaining a saturated surface for at least 2 hours before applying dry-pack mortar.
   d. Dry pack cone-shaped tie holes with dry-pack mortar as specified in this Section.

## 3.03 PLACING CONCRETE REINFORCEMENT, EMBEDS, AND ACCESSORIES

A. Preparation:
   1. Cut and bend deformed steel reinforcement in the shop and deliver completed bars to the site for installation:
      a. Do not field-bend deformed reinforcement.
   2. Surface preparation:
      a. Thoroughly clean reinforcing bars from rust scale, loose mill scale, rust coat, dirt, oil, and other coatings that adversely affect bonding capacity when placed in the work:
         1) Thin coating of red rust resulting from short exposures will not be considered objectionable.
      b. Remove concrete or other deleterious coatings on dowels and other reinforcement projecting from previous placements by wire brushing or sandblasting before the reinforcement is embedded in the subsequent placement.

B. Support of reinforcement and accessories:
   1. Provide supports for deformed bars and wire fabric to maintain reinforcement position indicated on the Drawings and to provide specified minimum clear concrete cover around the reinforcement.
   2. Use number of supports required to prevent reinforcement from sagging and to support loads during construction, but in no fewer quantities and locations than recommended by ACI MNL-66 and CRSI Manual of Standard Practice.
   3. Support wire fabric from reinforcing supports:
      a. Do not place wire fabric on grade or forms for subsequent lifting into plastic concrete during the concrete placement.
      b. Take care to maintain specified position of wire fabric in the concrete section and to prevent bending, draping, or kinking of the wires.
   4. Do not:
      a. Use brick, broken concrete masonry units, concrete spalls, rocks, or other such material for supporting reinforcement.

b. Support reinforcement on additional reinforcing bars installed with less cover than that required by the Contract Documents (“give away bars”).
c. Adjust location of reinforcement indicated on the Drawings to increase cover over support bars.

5. Furnish and use templates for placing column dowels.

C. Placing reinforcement:
1. Locate reinforcement to provide minimum clear concrete cover specified:
a. Where cover is not specified, provide cover in accordance with ACI CODE-318.
2. Accurately place reinforcement in accordance with the tolerances of ACI SPEC-117:
a. Where reinforcement must be moved beyond the specified placing tolerances to avoid interference with other reinforcement, conduits, or embeds, submit the proposed arrangement for the Engineer’s review.
3. Fasten reinforcement securely in place with wire ties:
a. After tying, bend ends of wire ties inward towards the center of the concrete to match clear concrete cover provided for reinforcement.
4. Do not weld reinforcing bars or wires.
5. Deformed reinforcing bars:
a. Tie slab bars at every intersection around the perimeter of slabs.
b. Tie wall bar and slab bar intersections, other than those around the perimeter, at every 4th intersection, but not more than 48 inches on center each way.
c. Lap splices:
1) Lap reinforcement at splices as indicated on the Drawings or specified.
2) Unless indicated on the Drawings, install lap splices with bars in contact and fastened together with tie wire.
3) If lap splice length is not indicated on the Drawings, provide lap splice equal to 40 times reinforcing bar diameter.
6. Welded wire fabric reinforcement:
a. Bend fabric as indicated on the Drawings or required to fit work.
b. Straighten fabric to make reinforcement in each face a flat, planar surface before placing in the Work.
c. Extend welded wire fabric across concrete section to provide fabric to within 2 inches of vertical concrete edges.
d. Lap splice welded wire fabric as indicated on the Drawings:
1) If no splice details are indicated, lap fabric at least 12 inches, fasten with wire ties spaced not more than 24 inches on center, and lace lap with wire of the same diameter of the fabric.

## 3.04 BATCHING, MIXING, TRANSPORTING, AND DELIVERING CONCRETE

A. General:
1. Measure, batch, mix, transport, and deliver ready-mixed concrete in accordance with ASTM C94.

B. Measuring and batching:
   1. Measure materials by weighing, except as otherwise specified or where other methods are specifically authorized in writing by the Engineer:
      a. Weigh cementitious materials separately.
   2. Furnish satisfactory means for checking moisture content of aggregates before batching:
      a. Adjust mix water to compensate for free moisture content of aggregate.
   3. Mixing water:
      a. Measure by volume or by weight.
      b. Maximum water-to-cementitious materials ratio for each concrete class shall not exceed that specified in Table B of this Section.
   4. Admixtures:
      a. Provide admixtures as specified.
      b. Batch products by means of mechanical batcher capable of accurate measurement, and in accordance with the admixture manufacturer's instructions.

C. Mixing and transporting:
   1. Mixing:
      a. Equip each truck mixer with device capable of counting number of drum revolutions and interlocked to prevent discharge of concrete from drum before required number of revolutions is complete.
      b. Once drum revolutions commence, continuously revolve drum until it has completely discharged its batch.
      c. Do not add water until drum commences revolutions.
      d. Engineer may require an increase in the designated minimum number of revolutions, or a decrease in the designated maximum number of revolutions if necessary to obtain satisfactory mixing:
         1) Incorporate such changes without additional costs to the Owner.
   2. Do not exceed the following time period for mixing and delivery:
      a. Total elapsed time from addition of water at batch plant through discharging of mix: Not to exceed the lesser of 90 minutes or 300 revolutions of the mixer drum.
      b. Total elapsed time for from arrival at the project site to completing discharge of mix: Not to exceed 30 minutes.
      c. Under conditions contributing to quick setting, the Engineer may reduce total elapsed time permitted.

D. On-site acceptance of concrete mixes:
   1. Concrete shall possess the properties specified in this Section at the point of placement.
   2. Do not place concrete:
      a. Having slump outside the limits indicated in Table B of this Section.
      b. That does not conform to specifications for entrained air content.
      c. For which the total elapsed time of mixing or elapsed time at the site exceeds the specified maximums.

## 3.05 CONVEYING, DEPOSITING, AND CONSOLIDATING CONCRETE

A. Preparation:
   1. General:
      a. Clean construction joints and forming surfaces of dirt, sawdust, chips, and other debris after forms are built and immediately before concrete or grout placement:
         1) Use vacuum cleaner if required to provide clean surfaces.
      b. Remove snow, ice, frost, and standing water from surfaces of formwork, reinforcement, and embeds in contact with concrete.
      c. Secure reinforcement, joint materials, anchors, embeds, and other items in place.
      d. Obtain the Engineer's observation and acceptance of preparations.
      e. During conveying, placement, consolidation, and finishing of concrete, protect surrounding construction, including concrete walls and slab surfaces, from concrete splatter.
      f. Thoroughly clean surrounding construction at the completion of each placement and before splatter sets up.
   2. Concrete construction on grade:
      a. Provide subgrade preparation, base materials, and compaction as required by the Contract Documents.
      b. Remove loose soils, debris, standing water, snow, or ice from subgrade.
      c. Provide moist subgrade with no standing or free water and no muddy or soft spots:
         1) When subgrade is not moist, sprinkle with water not less than 2 or more than 6 hours in advance of placing concrete.
         2) If subgrade becomes dry prior to actual placing of concrete, sprinkle again, without forming pools of water.
   3. Weather conditions:
      a. Hot weather: In hot weather conditions, make provisions in advance of placement for windbreaks, shading, fogging, sprinkling, ponding, or wet covering.
      b. Cold weather: In cold weather conditions, make provisions to maintain the required concrete temperatures without overheating or drying, and without exposing concrete to carbon dioxide from heater exhaust.
      c. Precipitation:
         1) Do not begin placements while rain, sleet, or snow is falling or anticipated, or unless adequate protection is provided.
         2) Do not allow precipitation to increase concrete water content or to damage the surface of the concrete.
      d. Wind:
         1) Do not begin placements during wind events that will blow dust or debris into the plastic concrete.
         2) Do not allow wind-blown debris to become embedded in or to damage the surface of the concrete.
         3) At all times, have sufficient coverings on hand to protect new concrete from excessive drying or blowing debris.

B. Conveying concrete:
   1. Convey concrete from mixer to place of final deposit by methods that prevent segregation or loss of materials.

2. Use chutes, pumps, and conveyors of size and design that will ensure continuous flow of concrete at point of delivery without cold joints.
3. Design and use chutes and devices for conveying and depositing concrete that direct concrete vertically downward when discharged from the chute or conveying device.
4. Keep conveying equipment clean by thoroughly washing and scraping upon completion of any placement.

C. Depositing concrete:
1. Do not place concrete under the following conditions:
   a. After initial set has occurred.
   b. When re-tempering has occurred.
2. Deposit concrete at or near its final position to avoid segregation caused by rehandling or flowing:
   a. Do not use vibrators to move concrete from its point of deposit.
   b. Use tremies for placing concrete where drop is over 5 feet.
3. Place concrete continuously in approximately horizontal layers not exceeding 24 inches in depth. Bring level up evenly in all parts of forms:
   a. After placement begins, continue without significant interruption and as a continuous operation until the end of that placement is reached.
   b. Do not allow “cold joints” to form between adjacent layers or areas of the placement, or initial set to form on “wet edge” of placements.
   c. Take precautions to prevent delays between placement of adjacent layers or areas from exceeding 20 minutes:
      1) If more than 20 minutes elapse after the initial surface was placed, spread a layer of neat cement grout, as specified for construction joints before depositing additional concrete.
4. Placing concrete on slopes: Commence placement at bottom of slope and work upward.
5. Placing horizontal concrete monolithically with structures below:
   a. If concrete for slabs, beams, or walkways is to be cast monolithically with walls or columns below, do not place the horizontal concrete elements until the concrete in walls or columns below has been placed, consolidated, and allowed to achieve initial set.
   b. Allow set time of not less than 1 hour.
   c. Maintain a moist surface at the top of the walls or columns during the setting period.
6. Placing a second concrete lift over hardened concrete below:
   a. Take special precautions in form work at top of old lift and bottom of new lift to prevent:
      1) Spreading and vertical or horizontal displacement of forms.
      2) Grout “bleeding” onto finished concrete surfaces.

D. Consolidating concrete:
1. Thoroughly consolidate concrete into forms and around reinforcement, pipes, and other embeds using mechanical vibrators:
   a. Take special care to place concrete solidly against forms, leaving no voids.
   b. Make concrete solid, dense, compact, and smooth.
2. Provide vibration energy sufficient to cause concrete to flow and readily settle into place, leaving no voids. Vibration should visibly affect concrete over a radius of at least 18 inches without segregation.

3. Vibrators:
    a. At all times, have sufficient vibrators on hand to consolidate concrete as it is placed.
    b. In addition to vibrators in use while concrete is being placed, have on hand at least 1 spare vibrator in serviceable condition.
    c. Place no concrete until it has been ascertained that all vibrating equipment, including spares, are in serviceable condition.

## 3.06 FINISHING CONCRETE

A. Provide concrete finishes as specified in Section 03366 - Concrete Finishes.

B. Liquid evaporation retardant:
1. Apply evaporation retardant when environmental conditions will result in rapid evaporation of moisture from the surface of the fresh concrete during finishing operations. Such conditions include low humidity, high heat, and wind occurring alone or in combination.
2. Immediately after the concrete is screeded, coat the surface of the concrete with a liquid evaporation retardant.
3. Apply the evaporation retardant again after each work operation as necessary to prevent drying shrinkage cracks and crazing at the surface.

## 3.07 CURING AND PROTECTING CONCRETE

A. Curing concrete:
1. Cure concrete by methods specified in this Section.
2. Keep concrete continuously moist and at a temperature of at least 50 degrees Fahrenheit for at least 7 days (cure period) after placement unless the details of a particular method specify a longer period.
3. Make provisions to maintain moisture or curing membrane integrity at edges of slabs, tops of walls, and joint surfaces, and to prevent loss of protection.
4. Schedule of curing methods:
    a. Concrete surfaces that will receive additional materials that require bond to the initial placement (including concrete; concrete repairs, coatings, paints, sealers; grout; and other materials):
        1) Water curing or plastic membrane curing.
    b. Formed surfaces:
        1) If non-absorbent forms are left in place for the duration of the cure period after placement: No additional requirements.
        2) For absorbent forms or when forms are removed before the completion of the cure period: Cure by water curing, plastic membrane curing, or sprayed membrane curing.
    c. Unformed concrete surfaces:
        1) Water curing, plastic membrane curing, or sprayed membrane curing.

5. Water curing:
    a. Keep surfaces of concrete constantly and visibly saturated by ponding, continuous fogging, or continuous sprinkling at all times during curing period:
        1) Cover surfaces if required to maintain saturated conditions.
        2) For horizontal surfaces, pond the surface with at least 2 inches of water or cover with saturated mats or fabric kept continuously wet.
    b. Formed surfaces:
        1) Each day forms remain in place may be counted as 1 day of water curing.
        2) Do not loosen form ties while concrete is being cured by forms left in place.
        3) No further credit for curing time will be allowed after contact between the concrete surface and the forms has been broken.
6. Plastic membrane curing:
    a. Cover concrete with plastic membrane, sealing joints and edges against displacement by wind or site operations and to prevent loss of moisture.
    b. Install plastic membrane as soon as concrete is finished and can be walked on without damage.
    c. Keep all surfaces of concrete under plastic membrane moist at all times during the curing period.
7. Sprayed membrane curing:
    a. Application of curing compound:
        1) Apply curing compound to concrete surface after repairing and patching, and within 1 hour after forms are removed:
            a) If more than 1 hour elapses between removal of forms and application of curing compound, provide water curing of affected surfaces for the full curing period.
        2) Contractor is cautioned that the method of applying curing compound specified in this Section may require more compound than normally suggested by manufacturer of compound, and also more than is customary in the trade.
        3) Apply curing compound by mechanical, power-operated sprayer with mechanical agitator that will uniformly mix all pigment and compound.
        4) Apply compound in at least 2 coats, with each subsequent coat in a direction turned 90 degrees from the preceding coat.
        5) Apply curing compound in sufficient quantity that concrete has uniform appearance and that the natural color of the concrete is effectively and completely concealed immediately after spraying.
        6) Continue to coat and recoat surfaces until specified coverage is achieved and until coating film remains on concrete surfaces.
        7) Apply compound to a film thickness that can be scraped from surfaces at any and all points after drying for at least 24 hours.
        8) Take care to apply curing compound to edges of placements and over full surface profile of construction joints.
    b. Removal of curing compound:
        1) Do not remove curing compound from concrete before the completion of the cure period.

2) Before placing fresh concrete against a surface previously coated with curing compound, remove the curing compound by heavy sandblasting, or alternate method acceptable to the Engineer.
3) Prior to final acceptance of the Work, remove any curing compound on surfaces exposed to view by sandblasting or other acceptable method. After removal, only the natural color of finished concrete shall remain visible, and such color shall be uniform over the entire surface.

B. Protecting concrete:
1. Immediately after placement, protect concrete from hot or cold weather, and mechanical damage.
2. Temperature:
a. Cold weather: Protect concrete during the curing period so that the concrete temperature is maintained within the following requirements:
1) Sections less than 12-inches thick: Minimum 55 degrees Fahrenheit.
2) Sections 12- to 36-inches thick: Minimum 50 degrees Fahrenheit.
b. Hot weather: Protect concrete during the curing period so that the concrete temperature does not exceed 90 degrees Fahrenheit.
c. Remove protection against temperature gradually so that concrete surface temperature does not drop or rise by more than 40 degrees Fahrenheit during any 24-hour period.
3. Maintain forms, shoring, and bracing in place after concrete placement for a period after concrete placement as indicated in the following paragraphs. Forms may be removed after these periods if the concrete has developed sufficient strength and hardness to resist surface or other damage:
a. Vertical forms:
1) General: Minimum 24 hours after concrete placement.
2) Sides of footings: Minimum 24 hours after concrete placement.
3) Sides of beams, girders, and similar members: Minimum 48 hours after concrete placement.
b. Horizontal forms:
1) Slabs, beams, and girders: Until concrete reaches specified compressive strength, f’c, or until shoring is installed.
c. Shoring for slabs, beams, and girders:
1) Shore until concrete strength reaches specified compressive strength, f’c:
a) Temporary shoring may be required after the specified compressive strength is reached if construction loads will exceed the designated live load capacity of the structure.
d. Wall bracing:
1) Brace until strength of concrete beams and slabs laterally supporting the wall reaches specified compressive strength, f’c.

C. Loads against or on the concrete:
1. Loading of green concrete, by backfilling or by placing personnel and equipment on the surface, is not permitted.
2. Backfilling: Do not place backfill against concrete walls until the wall and all elements attached to it, including connecting slabs or beams, are fully braced by the structure, and have achieved their minimum specified compressive strength, f’c.

## 3.08 JOINTS AND JOINT PREPARATION

A. Joint locations and details:
   1. Construct concrete work as monolith to the extent practical.
   2. Construct joints as indicated on the Drawings and as specified.
   3. Locations of construction, expansion, and other joints are indicated on the Drawings or specified in this Section:
      a. Do not relocate, add, or delete joints without prior approval from the Engineer.

B. Construction joints:
   1. Where spacing is not indicated on the Drawings, provide construction joints in slabs and walls at intervals not greater than 35 feet.
   2. Construct as indicated on the Drawings.
   3. Before placing fresh concrete against the joint: Use heavy sandblast to thoroughly clean joint surfaces and reinforcement crossing the joint of laitance, grease, oil, mud, dirt, curing compounds, mortar droppings, or other objectionable matter.
   4. Just before placing concrete against the joint, wash surface with water to saturate joint surface and concrete surfaces within 12 inches of the joint.
   5. Horizontal joints:
      a. Immediately before placing concrete, thoroughly spread bed of neat cement grout over the joint surface. Grout shall be as follows:
         1) Use same sand-to-cementitious materials ratio that is used for concrete mix.
         2) Use same materials that are used for concrete.
         3) Use water-to-cementitious materials ratio that is no more than that specified for concrete.
      b. Grout thickness: Not less than 1/2 inch, or more than 1 inch.

C. Contraction joints:
   1. Where spacing is not indicated on the Drawings, provide contraction joints in slabs and walls at intervals not greater than 35 feet.
   2. Construct as indicated on the Drawings.
   3. Before placing fresh concrete against the joint: Use heavy sandblast to thoroughly clean joint surfaces and reinforcement crossing the joint of laitance, grease, oil, mud, dirt, curing compounds, mortar droppings, or other objectionable matter.
   4. Coat face of previously placed concrete at joint with form release agent. Make provisions to prevent the accidental application of agent on the reinforcement.

D. Expansion joints:
   1. Where width is not indicated on the Drawings, provide 3/4-inch wide joint.
   2. Construct as indicated on the Drawings.
   3. Do not extend reinforcement, conduits, or other items through expansion joints unless details for such crossings are indicated on the Drawings.

4. Preformed expansion joint material:
    a. Accurately position joint filler in the joint:
        1) Fasten to concrete or forms with adhesive.
        2) Fastening joint filler using nails, bolts, screws, or similar items is not permitted.
    b. Tape splices in joint filler to prevent intrusion of mortar.

## 3.09 TOLERANCES

A. Concrete:
    1. Finished concrete: Conform to shapes, lines, grades, and dimensions indicated on the Drawings.
    2. In accordance with ACI SPEC-117, except as modified in the following paragraphs:
        a. Where more restrictive tolerances to accommodate equipment are indicated on the Drawings.
        b. Slabs where slope is indicated:
            1) Uniformly slope to drain.
            2) Without depressions that puddle water.
        c. Slabs indicated to be level:
            1) Maximum deviation of 1/8 inches in 10 feet without any apparent changes in grade.
            2) Without depressions that puddle water.

B. Embeds:
    1. General:
        a. Sleeves and inserts: Plus or minus 1/8 inch.
        b. Projected ends of anchor bolts: Plus 1/4 inch; minus 0 inches.
        c. Anchor bolt position: Plus or minus 1/16 inch.
    2. Equipment: Set inserts to tolerances required for proper installation and operation of equipment or systems to which insert pertains.

## 3.10 FIELD QUALITY CONTROL BY CONTRACTOR

A. Provide quality control over the Work of this Section as specified in Section 01450 - Quality Control.

B. Field tests:
    1. During progress of construction, provide testing to determine whether the concrete, as being produced, complies with requirements specified.
    2. Sampling and testing shall be performed by the Contractor's testing laboratory. Requirements as specified in Section 01450 - Quality Control:
        a. Cooperate in testing by allowing free access to the Work for testing laboratory to sample and test materials.
        b. Provide full access for the Engineer to observe concrete sampling and testing at any time.
        c. Contractor is responsible for providing care of and curing conditions for test specimens in accordance with ASTM C31 until specimens are collected by testing laboratory.
        d. Provide firmly braced, insulated, heated, closed wooden curing boxes. Include cold weather temperature and hot weather temperature control

thermostat for initial curing and storage from time of fabrication through receipt at the Contractor's testing laboratory.

3. Testing shall include:
    a. Sampling of concrete in accordance with ASTM C172.
    b. Temperature of concrete at delivery in accordance with the requirements of ASTM C1064 and as specified in this Section.
    c. Slump of concrete using slump cone in accordance with the requirements of ASTM C143. Test slump at the following intervals:
        1) Test slump at the beginning of each placement.
        2) As often as necessary to keep slump within the specified range, but not less than every 6th truck.
        3) When requested to do so by the Engineer.
        4) Observe concrete during slump test for signs of segregation:
            a) Observe concrete for mortar or moisture flow from slumped concrete.
            b) Reject concrete if mortar or moisture flows out of the mix.
    d. Unit weight of concrete in accordance with ASTM C138.
    e. Air entrainment in accordance with ASTM C173. Test air content at the following intervals:
        1) At the beginning of each placement.
        2) As often as necessary to keep entrained air within the specified range, but not less than every 6th truck.
        3) When requested to do so by the Engineer.
    f. Compressive strength, f'c, in accordance with ASTM C39. Required number of cylinders:
        1) Not less than 4 cylinder specimens, 4-inch diameter by 8-inches long, will be tested for each 150 cubic yards of each class of concrete; not less than 4 specimens for each half day of placement.
        2) One cylinder will be broken at 7 days and 3 cylinders will be broken at 28 days.
4. Furnish concrete for test specimens and provide manual assistance to testing lab in preparing said specimens.
5. Assume responsibility for providing care and on-site curing and protection for test specimens in accordance with ASTM C31.

## 3.11 FIELD QUALITY CONTROL BY OWNER

A. As specified in Section 01450 - Quality Control.

B. Special tests and inspections: As specified in Section 01455 - Regulatory Quality Assurance.

C. Field inspections:
    1. Observe construction for conformance to the Contract Documents and the accepted Submittals.
    2. Records of inspections:
        a. Provide a record of each inspection.
        b. Submit copies to the Contractor upon request.

D. Field tests:
   1. Engineer may request, at any time, additional testing to confirm materials being delivered and placed conform to the requirements of the Specifications:
      a. If such additional testing shows that the materials do not conform to the specified requirements, the Contractor shall pay the cost of these tests.
      b. If such additional testing shows that the materials do conform to the specified requirements, the Engineer shall pay the cost of these tests.

## 3.12 NON-CONFORMING WORK

A. Do not place concrete that does not conform to the requirements of these Specifications. Remove non-conforming materials from the site.

B. Strength requirements:
   1. Concrete is expected to reach higher compressive strength than the minimum specified compressive strength f'c as indicated in Table B of this Section.
   2. Concrete strength will be considered acceptable if following conditions are satisfied:
      a. Averages of all sets of 3 consecutive strength test results are greater than or equal to specified compressive strength f'c.
      b. No individual strength test (average of 2 cylinders tested at 28 days) falls below specified compressive strength f'c by more than 500 pounds per square inch.
   3. Whenever one or both of the conditions stated above is not satisfied, provide additional curing or testing of the affected portion as directed by the Engineer:
      a. Costs of such curing or testing shall be at the Contractor's expense.

C. Remove and replace or repair defective work as directed by the Engineer:
   1. Do not patch, repair, or cover defective work before observation by the Engineer.
   2. Make no repairs until the Engineer has accepted proposed methods for preparation and repair.

END OF SECTION

# SECTION 03366

# CONCRETE FINISHES

## PART 1 GENERAL

### 1.01 SUMMARY

A. Section includes:
   1. Concrete finishes.

### 1.02 REFERENCES

A. American Concrete Institute (ACI):
   1. 117-10 - Specification for Tolerances for Concrete Construction and Materials and Commentary.

B. International Concrete Repair institute (ICRI):
   1. Guideline No. 301.2: Selecting and Specifying Concrete Surface Preparation for Sealers, Coatings, and Polymer Overlays.

### 1.03 TERMINOLOGY

A. The words and terms listed below are not defined terms that require initial capital letters, but, when used in this Section, have the indicated meaning:
   1. Grade line: A reference line that separates surfaces considered to be above grade from those considered to be below grade. Located 12 inches below finished grades at the perimeter of the structure.
   2. Water line: A reference line that separates surfaces considered to be above the water level (and visible in the finished work) from those considered to be below the water level (and not visible in the finished work). For each water-bearing cell of a structure, defined as a line located 2 feet below the normal operating water level in that cell.

### 1.04 QUALITY ASSURANCE

A. Qualifications:
   1. Finishing personnel:
      a. Use qualified flatwork finishers.
      b. Finishing supervisor must have at least 5 years of experience finishing concrete.

B. Mockups:
   1. Construct mockup panels showing finishing of formed surfaces for review by the Engineer:
      a. Construct mockup panels demonstrating concrete finishes for vertical surfaces:
         1) Construct mockup panels for F4 and F5 finishes and tie-hole repairs for review by the Engineer.

2. Construct mockup slabs showing finishing of unformed surfaces for review by the Engineer:
    a. Construct mockup slabs demonstrating concrete finishes for horizontal surfaces:
        1) Construct mockup slabs for S1, S2, S4, and S5 finishes.
3. Include the following elements in mockup panels and slabs:
    a. Concrete joints:
        1) Horizontal and vertical joints of the types included in the Work.
    b. Concrete repairs:
        1) Repairs using materials and procedures proposed for the Work.
4. Construct mockup panels and slabs at beginning of project for review by the Engineer.
5. Panels and portions thereof accepted by the Engineer will serve as the standard of quality and workmanship for the Work.

## 1.05 DELIVERY, STORAGE, AND HANDLING

A. Packing and shipping:
    1. Deliver and store packaged materials in original containers until ready for use.

# PART 2 PRODUCTS

## 2.01 MATERIALS

A. Materials for mortar:
    1. As specified in Section 03301 - Concrete Work, unless otherwise noted.
    2. Where finished surfaces will be visible in the finished work, use same cement used for concrete batches in that area. Add white cement if required to obtain color match between base concrete and finishing mortars.

## 2.02 MIXES

A. Cement mortar:
    1. As specified in Section 03600 - Grouting.

B. Dry-pack mortar:
    1. As specified in Section 03600 - Grouting.

C. Mortar mix for F4 finish (“F4 Mortar”):
    1. Consisting of 1 part cement and 1-1/2 parts of fine sand passing Number 100 screen. Mix with enough water and emulsified bonding agent to have consistency of thick cream.

D. Mortar mix for F5 finish (“F5 Mortar”):
    1. Consisting of 1 part cement to 1-1/2 parts of sand passing Number 16 screen.

## 2.03 EVAPORATION RETARDANT

A. As specified in Section 03301 - Concrete Work.

## 2.04 NON-SLIP ABRASIVE

A. Type: Aluminum oxide abrasive of size 8/16, having structure of hard aggregate. Homogeneous, non-glazing, rust-proof, and unaffected by freezing, moisture, and cleaning compounds.

B. Manufacturers: One of the following, or equal:
   1. Abrasive Materials Incorporated, Hillsdale MI.
   2. Exolon Company, Tonawanda NY.

## 2.05 CONCRETE SEALERS

A. Floor sealer and dust-proofer:
   1. Non-membrane forming, breathable, non-yellowing, penetrating sealer designed to densify and seal a cured concrete surface.
   2. Low odor, VOC content of 0 grams per liter, and stable when exposed to ultraviolet radiation from sunlight.
   3. Manufacturers: One of the following, or equal:
      a. Dayton Superior: Day-Chem Sure Hard Densifier (J-17).
      b. Euclid Chemical Company: Euco Diamond Hard.
      c. L&M Construction Chemicals: Seal Hard.
      d. W.R. Meadows: Liqui-Hard.

# PART 3 EXECUTION

## 3.01 CONCRETE FINISHING - FORMED SURFACES

A. Scope:
   1. Finish formed surfaces with one of the finishes specified in the following paragraphs and as indicated in the Schedule of Concrete Finishes in this Section.
   2. Formed surfaces are those surfaces that the plastic concrete is placed against a temporary containment surface that will be removed after the concrete sets and takes its final form.

B. General:
   1. Provide setting and curing time from casting of concrete to removal of forms as specified in Section 03301 - Concrete Work.
   2. Provide curing after removal of forms as specified in Section 03301 - Concrete Work.
   3. Materials and mixes for finishes:
      a. Cement: Add white cement to mortars and grouts used for finishing if required to match color of repairs to surrounding surfaces.
   4. Grinding:
      a. Where grinding of concrete surfaces is permitted:
         1) Perform grinding using an iron-free wheel, such as an aluminum oxide wheel, to avoid entrapment of particles that produce rust stains.
         2) At locations where plastic-protected reinforcing bar supports are used, limit grinding to a maximum depth of 1/16 inch.

C. F1 finish: “Rough Form Finish”:
   1. Repair defective work.
   2. Remove fins and other projections larger than 1/2 inch.
   3. Fill tie holes using dry-pack mortar.
   4. After removal of any curing compounds, fill depressions larger than 1-inch wide or 1/2-inch deep using dry-pack mortar.
   5. Leave surface with texture imparted by forms.
   6. Surface irregularity: Not exceeding a 1-inch gap when measured over the length of a 5-foot straightedge.

D. F2 finish: “Form Finish”:
   1. Repair defective work.
   2. Remove fins and other projections larger than 1/4 inch.
   3. Fill tie holes using dry-pack mortar.
   4. Fill depressions:
      a. Fill after removal of any curing compounds.
      b. Fill depressions larger than 1/2 inch in width or 1/2 inch in depth using cement mortar.
      c. Fill larger voids and depressions, use dry-pack mortar.
   5. Leave surfaces with texture imparted by forms.
   6. Surface irregularity: Not exceeding a 1/4-inch gap when measured over the length of a 5-foot straightedge.

E. F3 finish: “Smooth Form Finish”:
   1. Repair defective work.
   2. Repair rough or irregular surface finishes resulting from failure of form release agent or other form conditions and provide a smooth, uniform surface appearance.
   3. Remove fins: Grind offsets, projections, and rough spots smooth.
   4. Fill tie holes using dry pack mortar.
   5. Fill depressions:
      a. Fill after removal of any curing compounds.
      b. Fill depressions 1/4 inch and larger in depth or 3/4 inch in width using cement mortar.
      c. For larger depressions, fill using dry pack mortar.
   6. Top coat tie holes and filled depressions with cement mortar to provide uniform appearance.
   7. Leave surfaces with texture that is generally smooth and uniform in appearance.
   8. Surface irregularity: Not exceeding a 1/8 inch gap when measured over the length of a 5-foot straightedge.

F. F4 finish: “Rubbed Finish”:
   1. As specified for F3 finish, except prepare surfaces and fill depressions 1/16 inch or larger in depth or width as follows.
   2. Fill depressions:
      a. “Brush-off” sandblast surfaces to expose all depressions and voids near the surface of the concrete.
      b. Thoroughly wet surfaces and begin filling depressions while surfaces are still damp.
      c. Use clean burlap, sponge rubber floats, or trowels to rub plastic F4 mortar over the entire surface to be finished. Fill pits, holes, and depressions.

d. Wipe surfaces clean. Do not leave any mortar on the surface, except that within the depressions.
e. Cure: Moist cure surfaces.

G. F5 finish: “Stoned Finish”:
1. As specified for F3 finish, except add stoned finish as follows:
2. Fill depressions:
a. Wet surfaces thoroughly with brush.
b. Rub wetted surfaces with a hard wood float dipped in water containing 2 pounds of Portland cement per gallon of water.
c. Rub surfaces until form marks and projections are removed.
d. Using a brush, spread plastic grindings from the rubbing operation uniformly over the surface. Work the material in to fill pits and small voids.
e. Cure: Moist cure brushed surfaces for at least 72 hours.
3. Finish surfaces:
a. After curing, obtain final finish by rubbing with a No. 50 grit carborundum stone.
b. Continue rubbing until entire surface has a smooth texture and is uniform in color.
c. Cure: Continue curing for remainder of specified time.
4. Note: If surfaces have become too hard to finish as specified in the preceding paragraphs, the following alternative procedure may be used:
a. Sandblast and wash related surfaces exposed to view, whether finished or not.
b. While surfaces are still damp, rub surface with mortar mix for F5 finish.
c. Finish by rubbing mortared surface with No. 60 grit carborundum stone. Add F5 mortar until surface is evenly filled without excess mortar. Continue stoning until surface is hard.
d. Moist cure surface for 72 hours.
e. After curing, make surface smooth in texture and uniform in color by rubbing with a No. 50 or No. 60 grit carborundum stone.
f. Continue curing until 7-day curing period is complete.

## 3.02 CONCRETE FINISHING - UNFORMED SURFACES

A. Scope:
1. Finish unformed surfaces with one of the finishes specified in the following paragraphs and as indicated in the Schedule of Concrete Finishes in this Section.
2. Unformed surfaces are those surfaces that are not cast against a temporary containment and the specified finish is achieved by tooling.

B. General:
1. Concrete placement:
a. Place concrete at a rate that allows spreading, straight-edging, and initial floating before bleed water appears:
1) Consider characteristics of concrete mixes used, including potential for accelerating or retarding effects of admixtures, fly ash, and temperatures, on plans for and scheduling of placement and finishing.
b. Place, consolidate, strike-off, and screed concrete level to bring surfaces to required planes and lines. Eliminate high and low spots.

c. Strike tops of walls and similar surfaces smooth and finish as specified to a texture consistent with that of adjacent formed surfaces.
d. After screeding, apply evaporation retardant to concrete surface if weather conditions will result in rapid evaporation of moisture from the surface of the concrete. Do not work evaporation retardant into the surface of the concrete.

2. Floating and re-straightening:
   a. Float concrete to compact and consolidate the surface.
   b. Initial floating:
      1) Provide initial floating immediately after screeding.
      2) Perform by hand using a wide bull float, darby, or highway straightedge.
      3) Complete before excess moisture or bleed water is present on the surface.
   c. Wait for concrete to stiffen and for the bleed water to stop rising and dissipate before proceeding with edging, hand-tooled jointing, and second floating.
   d. After initial floating, apply evaporation retardant to concrete surface if weather conditions will result in rapid evaporation of moisture from the surface of the concrete. Do not work evaporation retardant into the surface of the concrete.
   e. Second floating:
      1) Do not commence until bleed water has dissipated and concrete has stiffened enough to support weight of finishers and finishing equipment.
      2) May be by hand, or, if accepted by the Engineer, may be done using a bladed power float equipped with float shoes, or a power disk float.
      3) Float surfaces to a true, even plane, with no coarse aggregate visible.
      4) Evaporation retardant may not be applied after second floating.
   f. Flatness:
      1) Specified tolerances for flatness may require re-straightening of the surface between first and second floating operations and before steel troweling. Re-straighten concrete as required.
      2) Modify power equipment with alternate float shoes or other equipment if required to achieve specified flatness.
3. Troweling: Where finishes require troweling, conform to the following requirements:
   a. After surface moisture from floating has disappeared, steel trowel to a smooth, hard, dense concrete surface.
   b. Provide at least 2 trowelings:
      1) Avoid excessive troweling.
      2) Use smaller trowels for successive troweling.
      3) Make each successive troweling perpendicular to the previous pass.
   c. Do not add dry cement or additional water to the surface during troweling.
   d. In lieu of hand steel troweling, a power machine for finishing concrete may be used if accepted by the Engineer:
      1) Do not use power machine if concrete has not attained the set necessary to permit finishing without introduction of high and low spots into the concrete surface.
      2) Use equipment in full compliance with the manufacturer's recommendations.

3) Use smaller blades or higher pressure for each successive troweling.
4) Hand trowel areas of the concrete not accessible to power equipment.
5) Tolerances for flatness specified may require re-straightening of the surface during finishing. Modify power equipment with alternate shoes or other equipment if required to achieve these requirements.

e. Finishing with a fresno trowel or finishing to a “fresno finish” is not allowed.

4. Finishing tolerances:
   a. Slabs sloped to drain: Finish surfaces to adequately drain toward designated points or lines, regardless of tolerances specified.

C. S1 finish: “Scratch Finish”:
   1. Place, consolidate, and screed concrete level.
   2. Provide initial floating of concrete.
   3. Provide surface conforming to the “Conventional” floor flatness tolerance requirements of ACI 117 using the manual straightedge method (maximum 1/2-inch gap in 10 feet at 90 percent of locations; maximum 3/4-inch gap at any location), unless otherwise indicated.
   4. Before final set, roughen the surface with rakes:
      a. For sloped surfaces, rake grooves in the direction of drainage.
      b. Provide roughness equivalent to CSP 6 surface as designated by ICRI Guideline 310.2.
   5. Pressure wash surface to remove laitance before placing grout or toppings.

D. S2 finish: “Floated Finish”:
   1. Place, consolidate, and screed concrete to required elevations and slopes.
   2. Provide initial and second floatings of concrete. Float to a uniform texture.
   3. Provide surface conforming to the “Flat” floor flatness tolerance requirements of ACI 117 using the manual straightedge method (maximum 1/4-inch gap in 10 feet at 90 percent of locations; maximum 3/8-inch gap at any location), unless otherwise indicated.
   4. Remove laitance and leave surface clean.

E. S3 finish: “Steel Trowel Finish”:
   1. Place, consolidate, and screed concrete to required elevations and slopes.
   2. Provide S2 Floated Finish.
   3. Provide 2 trowelings:
   4. Provide finish conforming to the “Flat” floor flatness tolerance requirements of ACI 117 (maximum 1/4-inch gap in 10 feet), unless otherwise indicated.

F. S4 finish: “Steel Trowel Finish - Free of Trowel Marks”:
   1. Finish as specified for S3 Steel Trowel Finish, except that final troweling shall remove all trowel marks from the slab surface.

G. S5 finish: “Broomed Finish”:
   1. Finish as specified for S2 Floated Finish, except modify as follows:
   2. Finish surface by drawing a fine-hair broom lightly across the freshly floated surface:
      a. Provide resulting roughness for a non-skid surface. Finishing and roughness is subject to review and acceptance by the Engineer.

b. Direction of brooming:
    1) General:
        a) In same direction of and parallel to expansion joints.
        b) Perpendicular to primary direction of traffic.
    2) For sloped slabs, parallel to the direction of drainage.
    3) For round roof slabs, in the radial direction.

H. S6 finish: “Non-Slip Abrasive Finish”:
1. Place, consolidate, and screed concrete to required elevations and slopes.
2. Provide initial floating of surface.
3. Prepare and apply abrasive as recommended by the manufacturer:
    a. Apply using a shake screen or other accepted method to ensure even coverage without segregation of the abrasive.
    b. Install abrasive at a rate of 25 pounds for each 100 square feet of surface area.
4. After concrete has hardened enough to support the weight of a person, and unless otherwise indicated by the abrasive manufacturer, apply approximately 2/3 of the abrasive material required for coverage.
5. Finish as specified for S2 Floated Finish, except that re-floating is not required.
6. Apply remaining abrasive material at right angles to the first application and in locations necessary to provide the minimum specified thickness.
7. Immediately after the second application, re-float the surface to embed abrasive.
8. Finish as specified for S2 Steel Trowel Finish. Trowel abrasive into the surface, properly exposing material to produce a non-slip finish.

I. Concrete sealer:
1. See Drawings for locations of floors and slabs receiving concrete sealer finish.
2. Apply sealer in accordance with manufacturer’s instructions.

## 3.03 FIELD QUALITY CONTROL

A. Provide field quality control for the Work of this Section as specified in Section 01450 - Quality Control.

B. Field quality control by Contractor:
1. Field inspections and testing:
    a. Submit records of inspections and testing to Engineer within 24 hours after completion.
2. Manufacturer's services:
    a. Non-slip abrasive finish. Before beginning installation, conduct pre-installation meeting with manufacturer's technical representative to review product use and installation requirements.

C. Field quality control by Owner:
1. Special inspections, special tests, and structural observation:
    a. Not required.
2. Field inspections:
    a. Observe construction for conformance to the Contract Documents and the accepted Submittals.
    b. Provide record of each inspection. Submit copies to Engineer upon request.

## 3.04 NON-CONFORMING WORK

A. Unsatisfactory finishes that have hardened will require removal, grinding, topping, or other correction acceptable to the Engineer.

B. Re-work or refinish unsatisfactory finishes at no additional cost to the Owner.

C. See Section 03301 - Concrete Work for requirements.

## 3.05 SCHEDULE OF CONCRETE FINISHES

A. Formed surfaces: See Table 03366-A.

B. Unformed surfaces: See Table 03366-B.

| Table 03366-A: Concrete Finishes - Formed Surfaces | | | | | |
|---|---|---|---|---|---|
| | **Elements** | **Location** | **Surface Exposure** | **Finish** | **Notes** |
| EXTERIOR SURFACES | Walls<br>Columns<br>Slab edges | Wet structure: | Above grade or water line: | | |
| | | | - Exposed to view | F4 | |
| | | | - Covered | F2 | 1a |
| | | | | | |
| | | | Below grade or water line: | | |
| | | | - No coating | F1 | |
| | | | - Bituminous coating | F2 | |
| | | | - Waterproofing | F3 | |
| | | | | | |
| | | Dry structure: | Above grade line: | | |
| | | | - Exposed to view | F4 | |
| | | | - Covered | F2 | 1a |
| | | | | | |
| | | | Below grade line: | | |
| | | | - No coating | F1 | |
| | | | - Bituminous coating | F2 | |
| | | | - Waterproofing | F3 | |
| | | | | | |
| INTERIOR SURFACES | Walls<br>Columns<br>Slab edges | Wet structure: | Open basin: | | |
| | | | - Above water line | F4 | |
| | | | - Below water line | F3 | |
| | | | | | |
| | | | Covered basin | | |
| | | | - Above water line | F3 | |
| | | | - Below water line | F3 | |
| | | | | | |
| | | Dry structure: | Exposed to view | F4 | |
| | | | | | |
| | | | Covered | F2 | 1b |
| | | | | | |
| | Overhead slabs and beams | Wet structure: | Open basin | F3 | 1c, 1d |
| | | | | | |
| | | | Covered basin | F2 | 1d |
| | | | | | |
| | | Dry structure: | Exposed | F3 | 1c, 1d |
| | | | | | |
| | | | Covered by ceiling | F1 | 1d |
| | | | | | |

Notes:
(1a) Coverings include additional surfaces applied over the concrete, such as veneer, stucco, plaster, etc.
(1b) Coverings include additional surfaces applied over the concrete, such as veneer, stucco, plaster, furring strips with drywall, etc.
(1c) Applies to overhead surfaces visible from normal pedestrian travel routes.
(1d) At overhead slabs and beams, patch tie holes on sides of members.

| Table 03366-B: Concrete Finishes - Unformed Surfaces | | | | | |
|---|---|---|---|---|---|
| | **Element** | **Location** | **Exposure** | **Finish** | **Notes** |
| EXTERIOR SURFACES | Footings | Extensions | Exposed | S3 | |
| | | | Covered by soil | S2 | |
| | Slabs and beams - exposed | Walking or possible walking paths | Tops of treatment structures | S5 | 2a, 2b, 2f |
| | | | Stairs & landings | S5 | |
| | | Roofs | Exposed | S5 | |
| | | | Covered by roofing | S2 | |
| | Slabs and beams - submerged | Unless otherwise noted | All | S3 | 2f |
| | Walls, Corbels | Top of wall or corbel | All | S3 | One troweling |
| | | | | | |
| | Sidewalks | All | | S5 | |
| | | | | | |
| | Equipment Slabs | All | | S5 | |
| | | | | | |
| INTERIOR SURFACES | Floor slabs, includes flat and sloping surfaces | Wet structure | Exposed | | |
| | | | - Basins & channels | S3 | |
| | | | | | |
| | | | Covered | | |
| | | | - To receive basin bottom grout | S1 | |
| | | | - To receive concrete fill | S1 | 2e |
| | | | | | |
| | | Dry structure | Exposed | | |
| | | | - Pipe galleries | S4 | 2c |
| | | | - Stairs & landings | S4 | 2d |
| | | | - Shops & garages | S4 | |
| | | | - Equipment rooms | S4 | |
| | | | | | |
| | | | Covered | | |
| | | | - Tile on mortar bed | S2 | |
| | | | - Resilient flooring | S3 | |
| | | | - Carpet | S3 | |

Notes:
(2a) Includes slabs covering tanks, basins, channels, and similar structures.
(2b) Includes tops of walls or beams that serve as walkways.
(2c) In galleries with slabs subject to wetting, provide broom finish (S5) where indicated on the Drawings.
(2d) Provide broom finish (S5) where indicated on the Drawings.
(2e) Finish for concrete fill: See Floor slab, wet structure, exposed basins, and channels.
(2f) Slabs include flat and sloping surfaces.

C. Finish concrete surfaces in accordance with Finish Schedule indicated on the Drawings.

END OF SECTION

# SECTION 03600

# GROUTING

## PART 1 GENERAL

### 1.01 SUMMARY

A. Section includes:
   1. Cement grout.
   2. Cement mortar.
   3. Dry-pack mortar.
   4. Epoxy grout.
   5. Grout.
   6. Non-shrink epoxy grout.
   7. Non-shrink grout.

### 1.02 REFERENCES

A. ASTM International (ASTM):
   1. C109 - Standard Test Method for Compressive Strength of Hydraulic Cement Mortars (using 2-inch cube specimens).
   2. C230 - Standard Specification for Flow Table for Use in Tests of Hydraulic Cement.
   3. C531 - Standard Test Method for Liner Shrinkage and Coefficient of Thermal Expansion of Chemical-Resistant Mortars, Grouts, Monolithic Surfacings, and Polymer Concretes.
   4. C579 - Standard Test Method for Compressive Strength of Chemical-Resistant Mortars, Grouts, and Monolithic Surfacings and Polymer Concretes.
   5. C939 - Standard Test Method for Flow of Grout for Preplaced-Aggregate Concrete (Flow Cone Method).
   6. C942 - Standard Test Method for Compressive Strength of Grouts for Preplaced-Aggregate Concrete in the Laboratory.
   7. C1107 - Standard Specification for Packaged Dry, Hydraulic-Cement Grout (Non-shrink).
   8. C1181 - Standard Test Methods for Compressive Creep of Chemical-Resistant Polymer Machinery Grouts.

B. International Concrete Repair Institute (ICRI):
   1. 310.2R - Selecting and specifying Concrete Surface Preparations for Sealers, Coatings, Polymer Overlays, and Concrete Repair.

### 1.03 SUBMITTALS

A. Cement grout:
   1. Mix design.
   2. Material Submittals.

B. Cement mortar:
   1. Mix design.
   2. Material Submittals.

C. Non-shrink epoxy grout:
   1. Manufacturer's literature.

D. Non-shrink grout:
   1. Manufacturer's literature.

## 1.04 DELIVERY, STORAGE, AND HANDLING

A. Deliver materials to jobsite in their original, unopened packages or containers, clearly labeled with manufacturer's product identification and printed instructions.

B. Store materials in cool dry place and in accordance with manufacturer's recommendations.

C. Handle materials in accordance with the manufacturer's instructions.

# PART 2 PRODUCTS

## 2.01 MANUFACTURED UNITS

A. Non-shrink epoxy grout:
   1. Manufacturers: One of the following, or equal:
      a. Five Star Products, Inc., Five Star DP Epoxy Grout.
      b. L&M Construction Chemicals, Inc., EPOGROUT.
      c. Master Builder Solutions/Sika, MasterFlow 648.
   2. Non-shrink epoxy grout shall be 100 percent solid, premeasured, prepackaged system containing 2-component thermosetting epoxy resin and inert aggregate.
   3. Maintain flowable consistency for at least 45 minutes at 70 degrees Fahrenheit.
   4. Shrinkage or expansion: Less than 0.0006 inches per inch when tested in accordance with ASTM C531.
   5. Minimum compressive strength: 10,000 pounds per square inch at 24 hours and 14,000 pounds per square inch at 7 days when tested in accordance with ASTM C579, Method B.
   6. Compressive creep: Not exceed 0.0037 inches/per inch when tested under 400 pounds per square inch constant load at 140 degrees Fahrenheit in accordance with ASTM C1181.
   7. Coefficient of thermal expansion: Not exceed 0.000018 inches per inch per degree Fahrenheit when tested in accordance with ASTM C531, Method B.

B. Non-shrink grout:
   1. Manufacturers: One of the following, or equal:
      a. Five Star Products, Inc., Five Star Grout.
      b. L&M Construction Chemicals, Inc., CRYSTEX.
      c. Master Builder Solutions/Sika, MasterFlow 928.
   2. In accordance with ASTM C1107.
   3. Preportioned and prepackaged cement-based mixture.

4. Contain no metallic particles such as aluminum powder and no metallic aggregate such as iron filings.
5. Require only addition of potable water.
6. Water for pre-soaking, mixing, and curing: Potable water.
7. Free from emergence of mixing water from within or presence of water on its surface.
8. Remain at minimum flowable consistency for at least 45 minutes after mixing at 45 degrees Fahrenheit to 90 degrees Fahrenheit when tested in accordance with ASTM C230:
    a. If at fluid consistency, verify consistency in accordance with ASTM C939.
9. Dimensional stability (height change):
    a. In accordance with ASTM C1107, volume-adjusting Grade B or C at 45 degrees Fahrenheit to 90 degrees Fahrenheit.
    b. Have 90 percent or greater bearing area under bases.
10. Have minimum compressive strengths at 45 degrees Fahrenheit to 90 degrees Fahrenheit in accordance with ASTM C1107 for various periods from time of placement, including 5,000 pounds per square inch at 28 days when tested in accordance with ASTM C109 as modified by ASTM C1107.

## 2.02 MIXES

A. Cement grout:
    1. Use same sand-to-cementitious materials ratio for cement grout mix that is used for concrete mix.
    2. Use same materials for cement grout that are used for concrete.
    3. Use water-to-cementitious materials ratio that is no more than that specified for concrete.
    4. For spreading over surfaces of construction or cold joints.

B. Cement mortar:
    1. Use same sand-to-cementitious materials ratio for cement mortar mix that is used for concrete mix.
    2. Use same materials for cement mortar that are used for concrete.
    3. Use water-to-cementitious materials ratio that is no more than that specified for concrete being repaired.
    4. At exposed concrete surfaces not to be painted or submerged in water: Use sufficient white cement to make color of finished patch match that of surrounding concrete.

C. Dry-pack mortar:
    1. Proportions by weight: 1 part Portland cement to 2 parts concrete sand:
        a. Portland cement: As specified in Section 03301 - Concrete Work.
        b. Concrete sand: As specified in Section 03301 - Concrete Work.

D. Epoxy grout:
    1. Consist of mixture of epoxy or epoxy gel and sand:
        a. Epoxy: As specified in Section 03071 - Epoxies.
        b. Epoxy gel: As specified in Section 03071 - Epoxies.
        c. Sand: Clean, bagged, graded, and kiln-dried silica sand.

2. Proportioning:
    a. For horizontal work: Consist of mixture of 1 part epoxy with not more than 2 parts sand.
    b. For vertical or overhead work: Consist of 1 part epoxy gel with not more than 2 parts sand.

E. Grout:
1. Mix in proportions by weight: 1 part Portland cement to 4 parts concrete sand:
    a. Portland cement: As specified in Section 03301 - Concrete Work.
    b. Concrete sand: As specified in Section 03301 - Concrete Work.

F. Non-shrink epoxy grout:
1. Mix in accordance with manufacturer's installation instructions.

G. Non-shrink grout:
1. Mix in accordance with manufacturer's installation instructions such that resulting mix has flowable consistency and is suitable for placing by pouring.

## PART 3 EXECUTION

### 3.01 EXAMINATION

A. Inspect concrete surfaces to receive grout or mortar and verify that they are free of ice, frost, dirt, grease, oil, curing compounds, paints, impregnations, and loose material or foreign matter likely to reduce bond or performance of grout or mortar.

### 3.02 PREPARATION

A. Surface preparation for grouting other baseplates:
1. Remove grease, oil, dirt, dust, curing compounds, laitance, and other deleterious materials that may affect bond to concrete and bottoms of baseplates.
2. Roughen concrete surfaces in contact with grout to ICRI CSP-6 surface profile or rougher:
    a. Remove loose or broken concrete.
3. Metal surfaces in contact with grout: Grit blast to white metal surface.

### 3.03 INSTALLATION

A. Mixing:
1. Cement grout:
    a. Use mortar mixer with moving paddles.
    b. Pre-wet mixer and empty out excess water before beginning mixing.
2. Cement mortar:
    a. Use mortar mixer with moving paddles.
    b. Pre-wet mixer and empty out excess water before beginning mixing.
3. Dry-patch mortar:
    a. Use only enough water so that resulting mortar will crumble to touch after being formed into ball by hand.

4. Non-shrink epoxy grout:
    a. Keep temperature of non-shrink epoxy grout from exceeding manufacturer's recommendations.
5. Non-shrink grout:
    a. May be dry packed, flowed, or pumped into place. Do not overwork grout.
    b. Do not retemper by adding more water after grout stiffens.

B. Placement:
1. Cement grout:
    a. Exercise care in placing cement grout because it is required to furnish structural strength, impermeable water seal, or both.
    b. Do not use cement grout that has not been placed within 30 minutes after mixing.
2. Cement mortar:
    a. Use mortar mixer with moving paddles.
    b. Pre-wet mixer and empty out excess water before beginning mixing.
3. Epoxy grouts:
    a. Wet surfaces with epoxy for horizontal work or epoxy gel for vertical or overhead work prior to placing epoxy grout.
4. Non-shrink epoxy grout:
    a. Mix in complete units. Do not vary ratio of components or add solvent to change consistency of mix.
    b. Pour hardener into resin and mix for at least 1 minute and until mixture is uniform in color. Pour epoxy into mortar mixer wheelbarrow and add aggregate. Mix until aggregate is uniformly wetted. Over mixing will cause air entrapment in mix.
5. Non-shrink grout:
    a. Add non-shrink cement grout to premeasured amount of water that does not exceed the manufacturer's maximum recommended water content.
    b. Mix in accordance with manufacturer's instructions to uniform consistency.

C. Curing:
1. Cement based grouts and mortars:
    a. Keep continuously wet for minimum of 7 days. Use wet burlap, soaker hose, sun shading, ponding, and in extreme conditions, combination of methods.
    b. Maintain above 40 degrees Fahrenheit until it has attained compressive strength of 3,000 pounds per square inch, or above 70 degrees Fahrenheit for minimum of 24 hours to avoid damage from subsequent freezing.
2. Epoxy based grouts:
    a. Cure grouts in accordance with manufacturers' recommendations:
        1) Do not water cure epoxy grouts.
    b. Do not allow any surface in contact with epoxy grout to fall below 50 degrees Fahrenheit for minimum of 48 hours after placement.

D. Grouting equipment bases, baseplates, soleplates, and skids: As specified in Section 15050 - Common Work Results for Mechanical Equipment.

E. Grouting other baseplates:
1. General:
    a. Use non-shrink grout as specified in this Section.

b. Baseplate grouting shall take place from 1 side of baseplate to other in continuous flow of grout to avoid trapping air in grout.
c. Maintain hydrostatic head pressure by keeping level of grout in headbox above bottom of baseplate. Fill headbox to maximum level and work grout down.
d. Vibrate, rod, or chain non-shrink grout to facilitate grout flow, consolidate grout, and remove trapped air.

2. Forms and headboxes:
   a. Build forms using material with adequate strength to withstand placement of grouts.
   b. Use forms that are rigid and liquidtight. Caulk cracks and joints with elastomeric sealant.
   c. Line forms with polyethylene for easy grout release. Coating forms with 2 coats of heavy-duty paste wax is also acceptable.
   d. Headbox shall be 4 to 6 inches higher than baseplate and shall be located on 1 side of baseplate.
   e. After grout sets, remove forms and trim back grout at 45 degree angle from bottom edges of baseplate.

## 3.04 FIELD QUALITY CONTROL

A. Non-shrink epoxy grout:
   1. Test for 24-hour compressive strength in accordance with ASTM C579, Method B.

B. Non-shrink grout:
   1. Test for 24-hour compressive strength in accordance with ASTM C942.

END OF SECTION

# SECTION 03926

# STRUCTURAL CONCRETE REPAIR

## PART 1 GENERAL

### 1.01 SUMMARY

A. Section includes:
   1. Repairing damaged structural concrete.

### 1.02 REFERENCES

A. ASTM International (ASTM):
   1. C109 - Standard Test Method for Compressive Strength of Hydraulic Cement Mortars (Using 2-in. or Cube Specimens).
   2. C293 - Standard Test Method for Flexural Strength of Concrete (Using Simple Beam with Center-Point Loading).
   3. C348 - Standard Test Method for Flexural Strength of Hydraulic-Cement Mortars).
   4. C666 - Standard Test Method for Resistance of Concrete to Rapid Freezing and Thawing.
   5. C882 - Standard Test Method for Bond Strength of Epoxy-Resin Systems Used With Concrete By Slant Shear.

### 1.03 SUBMITTALS

A. Product data: Submit manufacturer's data completely describing structural repair concrete materials.

B. Certificates of Compliance.

C. Manufacturer's instructions.

### 1.04 QUALITY ASSURANCE

A. Manufacturer qualifications: The manufacturer of the specified product shall have been in existence for a minimum of 10 years.

B. Allowable tolerances: Deviation from plumb or level shall not exceed 1/8 inch within 10 feet in any direction, as determined with a 10-foot straight edge.

### 1.05 DELIVERY, STORAGE, AND HANDLING

A. Deliver the specified product in original, unopened containers with the manufacturer's name, labels, product identification, and batch numbers.

B. Store and condition the specified product as recommended by the manufacturer.

C. Deliver, store, and handle packaged materials in the manufacturer's original, sealed containers, each clearly identified with the manufacturer's name, and name and type of product.

D. Store materials subject to damage by dirt and moisture in a clean, dry location, off the ground, and suitably protected.

## 1.06 PROJECT CONDITIONS

A. Existing conditions:
   1. Hot weather: ACI 305.
   2. Cold weather: ACI 306.
   3. Do not place concrete repair mortar during precipitation, unless adequate protection is provided.

# PART 2 PRODUCTS

## 2.01 DESIGN AND PERFORMANCE CRITERIA

A. General: Structural repair concrete composed of cementitious material capable of being placed in formed vertical and overhead applications, and on horizontal surfaces.

B. Design requirements:
   1. Provide material suitable for performing in environments subject to corrosive attack by chlorides and sulfates, freeze/thaw cycles, low permeability, and abrasion resistant.
   2. Provide concrete repair mortar cement that is placeable from 1 inch in depth and extendable in greater depths.
   3. Concrete repair mortar shall be capable of being poured in place or troweled in place to suit the conditions encountered.

## 2.02 MATERIALS

A. Structural repair concrete:
   1. Manufacturers: One of the following or equal:
      a. Master Builder Solutions/Sika, MasterEmaco S 466CI.
      b. Sika Corp., SikaTop 123 Plus.
   2. Compressive strength: As follows in accordance with ASTM C109:
      a. 1 day: 2,500 pounds per square inch, minimum.
      b. 7 day: 6,000 pounds per square inch, minimum.
      c. 28 day: 7,000 pounds per square inch, minimum.
   3. Bond strength by slant shear: 2,200 pounds per square inch minimum at 28 days, in accordance with ASTM C882 modified.
   4. Flexural strength: 2,000 pounds per square inch minimum at 28 days, when tested in accordance with ASTM C293, or 770 pounds per square inch minimum at 28 days when tested in accordance with ASTM C348.
   5. Rapid freeze/thaw durability: In accordance with ASTM C666; Procedure A.
      a. Relative durability factor at 300 cycles: 95 percent minimum.

6. Working time: 30 to 40 minutes.
7. Color: Concrete gray.

B. Water: Potable, clean, not detrimental to concrete.

C. Form materials:
1. Smooth finish: Match surrounding concrete finish.
2. Brace as required to maintain tolerances.

## PART 3 EXECUTION

### 3.01 EXAMINATION

A. Verify that concrete surfaces and exposed reinforcing are clean and free of contaminants.

### 3.02 PREPARATION

A. Prepare existing concrete by cleaning with steel brush and applying bonding agent in accordance with manufacturer's instructions.

B. Thoroughly clean reinforcement and other embedded items to remove loose rust and other objectionable matter.

C. Thoroughly wet wood forms, except coated plywood, and adjacent concrete at least 1 hour in advance of placing concrete; securely close cleanout end inspection ports; repeat wetting as necessary to keep forms damp.

D. Damaged concrete:
1. Areas to be repaired shall be clean, sound, and free of contaminants.
   a. Remove loose and deteriorated concrete by mechanical means acceptable to the Engineer.
   b. Saw cut perimeter 1/2-inch maximum.
2. Chip concrete substrate to obtain a surface profile of 1/16 inch to 1/8 inch in depth with a new fractured aggregate surface.
   a. Area to be repaired shall be not less than 1 inch in depth.
3. Concrete removal shall extend along the reinforcing steel to locations along the bar free of bond inhibiting corrosion, and where the bar is well bonded to surrounding concrete.

E. Use the following procedures where reinforcing steel with active corrosion is encountered:
1. Sandblast reinforcing steel to remove contaminants and rust.
2. Determine section loss, splice new reinforcing steel where there is more than 15 percent loss as directed by the Engineer.
   a. If more than half the diameter of the reinforcing steel is exposed, chip out behind the reinforcing steel a minimum of 1/2 inch. Distance chipped behind the reinforcing steel must also equal or exceed the minimum placement depth of the accepted material.

F. Treat cracks in the substrate at the area of patching or overlay work as directed by the Engineer.

G. Extend existing control and expansion joints through any concrete repair.

H. Apply an epoxy-bonding agent to area to be repaired, as specified in Section 03071 - Epoxies, prior to patching concrete with polymer-modified Portland cement mortar.

## 3.03 MIXING

A. Mix in accordance with manufacturer's mixing instructions.

## 3.04 INSTALLATION

A. Formed surface finishes:
   1. Smooth finish:
      a. Obtain by the use of plywood, sheet metal, or lined wood forms; no fins, pockmarks, or other irregularities shall be present in the exposed surfaces of concrete.
      b. Place no structural repair concrete without prior authorization of the Engineer.

B. Verify that form materials are in place and ready to receive installation of concrete repair material.

C. Install in accordance with manufacturer's installation instructions.

D. In accordance with ACI recommendations, apply concrete repair material only when ambient conditions of moisture, temperature, humidity, and wind are favorable for curing.

E. Scrub mortar into substrate, filling cracks, voids, and pores.

F. For new construction, finish of repaired area shall match required finish for concrete being repaired.

G. For existing concrete, finish of repair area shall match finish of concrete being repaired.

H. During the curing process, protect concrete repair from rain, wind, or freezing as required:
   1. Keep sufficient covering on hand at all times for protection of repair concrete.

## 3.05 CLEANING

A. Remove debris and excess material. Leave work site in a neat, clean condition.

END OF SECTION

# SECTION 05120

# STRUCTURAL STEEL FRAMING

## PART 1 GENERAL

### 1.01 SUMMARY

A. Section includes:
   1. Structural steel shapes and plate.
   2. Fasteners and structural hardware:
      a. All thread rods.
      b. High-strength bolts.
   3. Welding.
   4. Bolting.

### 1.02 REFERENCES

A. American Institute of Steel Construction (AISC):
   1. 303 - Code of Standard Practice for Steel Buildings and Bridges.
   2. 360 - Specification for Structural Steel Buildings.

B. American Iron and Steel Institute (AISI):
   1. Steel and stainless steel alloys (types) as indicated.

C. American Welding Society (AWS):
   1. A5.1 - Specification for Carbon Steel Electrodes for Shielded Metal Arc Welding.
   2. A5.17 - Specification for Carbon Steel Electrodes and Fluxes for Submerged Arc Welding.
   3. A5.20 - Specification for Carbon Steel Electrodes for Flux Cored Arc Welding.
   4. D1.1 - Structural Welding Code - Steel.
   5. D1.6 - Structural Welding Code - Stainless Steel.

D. ASTM International (ASTM):
   1. A6 - Standard Specification for General Requirements for Rolled Structural Steel Bars, Plates, Shapes, and Sheet Piling.
   2. A36 - Standard Specification for Carbon Structural Steel.
   3. A123 - Standard Specification for Zinc (Hot-Dip Galvanized) Coatings on Iron and Steel Products.
   4. A153 - Standard Specification for Zinc Coating (Hot-Dip) on Iron and Steel Hardware.
   5. A194 - Standard Specification for Carbon and Alloy Steel Nuts for Bolts for High Pressure or High Temperature Service, or Both.
   6. A240 - Standard Specification for Chromium and Chromium-Nickel Stainless Steel Plate, Sheet, and Strip for Pressure Vessels and for General Applications.
   7. A276 - Standard Specification for Stainless Steel Bars and Shapes.
   8. A380 - Standard Practice for Cleaning, Descaling, and Passivation of Stainless Steel Parts, Equipment, and Systems.

9. A500 - Standard Specification for Cold-Formed Welded and Seamless Carbon Steel Structural Tubing in Rounds and Shapes.
10. A501 - Standard Specification for Hot-Formed Welded and Seamless Carbon Steel Structural Tubing.
11. A563 - Standard Specification for Carbon and Alloy Steel Nuts.
12. A992 - Standard Specification for Structural Steel Shapes.
13. F436 - Standard Specification for Hardened Steel Washers.
14. F593 - Standard Specification for Stainless Steel Bolts, Hex Cap Screws, and Studs.
15. F594 - Standard Specification for Stainless Steel Nuts.
16. F959 - Standard Specification for Compressible-Washer-Type Direct Tension Indicators for Use with Structural Fasteners.
17. F2329 - Standard Specification for Zinc Coating, Hot-Dip, Requirements for Application to Carbon and Alloy Steel Bolts, Screws, Washers, Nuts, and Special Threaded Fasteners.
18. F3125 - Standard Specification for High Strength Structural Bolts, Steel and Alloy Steel, Heat Treated, 120 ksi and 150 ksi Minimum Tensile Strength.

E. Research Council on Structural Connections (RCSC):
1. Specification for Structural Joints Using High-Strength Bolts (RCSC Specification).

## 1.03 TERMINOLOGY

A. The words and terms listed below are not defined terms that require initial capital letters, but, when used in this Section, have the indicated meaning.
1. Snugtight: At bolted joints, the tightness attained with a few impacts of an impact wrench, or by the full effort of an ironworker using a spud wrench to bring the connected plies into firm contact.
2. Stainless steel related terms:
   a. Descaling: Removal of heavy, tightly adherent oxide films resulting from hot-forming, heat-treatment, welding, and other high-temperature operations.
   b. Passivation: Chemical treatment of stainless steel with a mild oxidant for the purpose of enhancing the spontaneous formation of the steel's protective passive film.
   c. Pickling: Chemical descaling of stainless steel using aqueous solutions of nitric and hydrofluoric acid, or various proprietary formulations as specified.

## 1.04 SUBMITTALS

A. Product data:
1. Welding electrodes for field welds: Electrode manufacturer's data.
2. Stainless steel: Fabricator name and qualifications, member dimensions and structural section properties, and specifications and procedures used for pickling and passivating members.

B. Shop Drawings:
1. Fabrication and erection drawings.

C. Quality Control Submittals:
   1. Welding procedure specifications (WPS) in accordance with AWS D1.1 and D1.6.
      a. Submit WPS for each type of welded joint used, whether prequalified or qualified by testing.
         1) State electrode manufacturer and specific electrodes used.
         2) Indicate required AWS qualification for joint.
      b. Submit WPS with Shop Drawings that indicate those welds.
      c. Submit Procedure Qualification Record (PQR) in accordance with AWS D1.1 and D1.6 for welding procedures qualified by testing.
   2. Welder qualifications: For each welding process and position:
      a. Welder's qualification certificates.
      b. Contractor's statement that certificate will be "in effect" at the time(s) welding will be performed based on the "Period of Effectiveness" provisions of AWS D1.1 and D1.6.
   3. Stainless Steel fabricator's AISC certification.

D. Test reports:
   1. Certified copies of mill tests and analyses made in accordance with applicable ASTM standards, or reports from a recognized commercial laboratory, including chemical and tensile properties of each shipment of structural steel or part thereof having common properties.

## 1.05 QUALITY ASSURANCE

A. Certification:
   1. Steel and Stainless Steel fabricators shall be certified by the AISC or other certification acceptable to the Engineer and the building official having jurisdiction.

B. Welding:
   1. Perform welding of structural metals in accordance with AWS D1.1 and D1.6 using welders who have current AWS qualification certificate for the process, position, and joint configuration to be welded.
   2. Make welding procedure specifications available at the locations where welding is performed.
   3. Notify the Engineer at least 24 hours before starting shop or field welding.
   4. Engineer may check materials, equipment, and qualifications of welders.
   5. Remove welders performing unsatisfactory Work, or require requalification.
   6. Engineer may use gamma ray, magnetic particle, dye penetrant, trepanning, or other aids to visual inspection to examine any part of welds or all welds.
   7. Contractor shall bear costs of retests on defective welds.
   8. Contractor shall also bear costs in connection with qualifying welders.

## 1.06 DELIVERY, STORAGE, AND HANDLING

A. Packing and shipping: Deliver structural steel free from mill scale, rust, and pitting.

B. Storage and protection: Until erection and painting, protect from weather items not galvanized or protected by a shop coat of paint.

## PART 2 PRODUCTS

### 2.01 MATERIALS

A. Unless otherwise specified or indicated on the Drawings, materials shall be in accordance with the following:

| Item | ASTM Standard | Class, Grade, Type, or Alloy Number |
|---|---|---|
| **Carbon Steel** | | |
| Plate, bars, rolled shapes (except W and WT shapes), and miscellaneous items | A36 | -- |
| Rolled W and WT shapes | A992 | Grade 50 |
| Hollow structural sections/HSS: Round, square, or rectangular (including “pipe” where indicated for structural members and supports) | A500 | Grade C |
| **Stainless Steel** | | |
| Plate, sheet, and strip | A240 | Type 316 L |
| Bars and shapes | A276 | Type 316 L |

### 2.02 FASTENERS AND STRUCTURAL HARDWARE

A. General:
   1. Materials: Of domestic manufacture.
   2. Where fasteners and hardware are specified to be galvanized, hot-dip galvanize in accordance with ASTM A153 or ASTM F2329, unless otherwise specified.

B. All thread rods:
   1. Carbon steel:
      a. In accordance with ASTM A36 unless otherwise indicated on the Drawings.
      b. Nuts: ASTM A194.
      c. Washers: ASTM F436.
   2. Galvanized carbon steel:
      a. In accordance with ASTM A36 unless otherwise indicated on the Drawings, and hot dip galvanized in accordance with ASTM A153.
      b. Nuts: ASTM A194; hot-dip galvanized in accordance with ASTM A153.
      c. Washers: ASTM F436; hot-dip galvanized in accordance with ASTM A153.
   3. Stainless steel:
      a. Units descaled, pickled, and passivated as specified in the Fabrication article in this Section.
      b. Threaded rods and nuts shall be the products of a single manufacturer/fabricator to ensure proper fit without galling. Ship all thread rods with properly fitting nuts attached.
      c. Alloy Type 316L as indicated on the Drawings.
      d. Type 316L:
         1) Rod: ASTM F593, Group 2, Condition CW, coarse threads.

2) Nuts: ASTM F594. Match alloy of rod (group and UNS designation).
3) Washers: Type 316L stainless steel.

C. Anchor bolts, anchor rods, and post-installed steel anchors: As indicated on the Drawings and as specified in Section 05190 - Mechanical Anchoring and Fastening to Concrete and Masonry.

D. High-strength bolts:
1. Provide high-strength bolt assembly with nuts, hardened flat washers, and compressible-washer-type direct tension indicators.
2. Carbon steel: Uncoated:
a. Bolts: Plain heavy hex structural bolts in accordance with ASTM F3125, Grade A325, Type 1.
b. Nuts: Heavy hex nuts in accordance with ASTM A563, Grade C.
c. Washers:
1) Adjacent to normal, oversized, and short-slotted holes: Circular, square or rectangular beveled, clipped, or extra thick washers in accordance with ASTM F436, Type 1. Flat circular washers unless otherwise indicated on the Drawings.
2) Adjacent to long slotted holes: Fabricated from 5/16-inch thick plate in accordance with ASTM A36.

E. Stainless steel bolts (for use in stainless steel structures):
1. General:
a. Bolts and nuts shall be the products of a single manufacturer/fabricator to ensure proper fit without galling. Ship bolts with properly fitting nuts attached.
b. Units descaled, pickled and passivated as specified in the Fabrication article in this Section.
2. Alloy: Type 316L to match alloy of structural members being connected.
3. Type 316L:
a. Bolts: ASTM F593, Group 2, Condition CW, coarse threads.
b. Nuts: ASTM F594. Match alloy (group and UNS designation) and threads of bolts.
c. Washers: Type 316L stainless steel.
4. Welded studs: As indicated on the Drawings and as specified in Section 05190 - Mechanical Anchoring and Fastening to Concrete and Masonry.

## 2.03 ISOLATING SLEEVES AND WASHERS

A. As indicated on the Drawings and as specified in Section 05190 - Mechanical Anchoring and Fastening to Concrete and Masonry.

## 2.04 THREAD COATING

A. Manufacturers: One of the following or equal:
1. Bostik, Never-Seez.
2. Oil Research, Inc., WLR No. 111.

## 2.05 SUPPLEMENTARY PARTS

A. Furnish as required for complete structural steel erection, whether or not such parts and Work are specified or indicated on the Drawings.

## 2.06 FABRICATION

A. Shop assembly:
   1. Fabricate structural steel in accordance with AISC 360 and AISC 303 unless otherwise specified or modified by applicable regulatory requirements.
   2. Where anchors, connections, or other details of structural steel are not specifically indicated on the Drawings or specified, their material, size and form shall be equivalent in quality and workmanship to items specified.
   3. Round off sharp and hazardous projections and grind smooth.
   4. Take measurements necessary to properly fit work in the field. Take responsibility for and be governed by the measurements and proper working out of all the details.
   5. Take responsibility for correct fitting of metalwork.
   6. Welded connections:
      a. In accordance with AWS requirements for the metals to be welded.
      b. Weld only in accordance with approved welding procedure specifications.
      c. Keep welding procedure specifications readily available for welders and inspectors during fabrication processes.

B. Stainless steel shapes and assemblies:
   1. For structural members such as W shapes, S shapes, channels, angles, and similar rolled shapes not available in quantity, size, and type of stainless steel specified or indicated on the Drawings**:**
      a. Fabricate shapes using laser-fused, full penetration welds between pieces of plate to attain same or higher section modulus and moment of inertia as that of members indicated on the Drawings**.**
      b. Fabricate shapes from dual grade stainless steel.
      c. Fabricate beams and channels in accordance with ASTM A6 tolerances.
      d. Manufacturers: The following or equal:
         1) Stainless Structural, LLC.
   2. Cleaning and passivation:
      a. Following shop fabrication of stainless steel members and bolts, clean and passivate fabrications at point of manufacture.
      b. Finish requirements: Remove free iron, heat tint oxides, weld scale and other impurities, and obtain a bright passive finished surface with no etching, pitting, frosting, or discoloration.
      c. Provide quality control testing to verify effectiveness of cleaning agents and procedures and to confirm that finished surfaces are clean and passivated.
         1) Conduct sample runs using test specimens with proposed cleaning agents and procedures as required to avoid adverse effects on surface finishes and base materials.

d. Pre-clean, chemically de-scale (pickle), passivate, and final-clean fabrications in accordance with the requirements of ASTM A380.
   1) If degreasing is required before cleaning (pickling) to remove scale or iron oxide, cleaning with citric acid treatments is permissible; however, such treatments shall be followed inorganic cleaners.
   2) Pickle and passivate stainless steel using a nitric acid solution in accordance with ASTM A380, Annex A2, Table A2.1, Part II.
   3) Pickling by citric acid treatment or sulfuric acid treatment is not considered to satisfy the requirements of this Section.
e. Inspect after cleaning using methods specified for “gross inspection” in ASTM A380.
f. Improperly or poorly cleaned and passivated materials shall not be shipped and will not be accepted at the Site.

C. Galvanized carbon steel:
   1. Where galvanizing is required, hot-dip structural steel after fabrication in accordance with ASTM A123.
   2. Do not electro-galvanize or mechanically-galvanize unless specified or accepted by the Engineer.
   3. Re-straighten galvanized items that bend or twist during galvanizing.

## PART 3 EXECUTION

### 3.01 EXAMINATION

A. Verification of conditions: Examine Work in place to verify that it is satisfactory to receive the Work of this Section. If unsatisfactory conditions exist, do not begin this Work until such conditions have been corrected.

### 3.02 ERECTION

A. General:
   1. Fabricate structural and foundry items to true dimensions without warp or twist.
   2. Form welded closures neatly and grind off smooth where weld material interferes with fit or is unsightly.
   3. Install structural items accurately and securely, true to level, plumb, in correct alignment and grade, with all parts bearing or fitting structure or equipment for which intended.
   4. Do not shift out of alignment, re-drill, re-shape, or force fit fabricated items.
   5. Place anchor bolts or other anchoring devices accurately and make surfaces that bear against structural items smooth and level.
   6. Rigidly support and brace structural items needing special alignment to preserve straight, level, even, and smooth lines. Keep structural items braced until concrete, grout, or dry pack mortar has hardened for 48 hours minimum.
   7. Erect structural steel in accordance with AISC 303 unless otherwise specified or modified by applicable regulatory requirements.
   8. Where anchors, connections, and other details of structural steel erection are not specifically indicated on the Drawings or specified, form, locate, and attach with equivalent in quality and workmanship to items specified.

9. Round off sharp or hazardous projections and grind smooth.
10. Paint or coat steel items as specified in Section 09960 - High-Performance Coatings.

B. Stainless steel: Take necessary precautions to avoid iron contamination of stainless steel during delivery, storage, and handling.
1. Segregate stainless steel from iron.
2. Tools and handling devices.
   a. Do not use iron tools clamps, chokes, working surfaces, or brushes when fabricating, handling, and erecting stainless steel.
   b. Do not use tools that have been contaminated by contact with iron.
   c. Use stainless steel, polymer coated, or wood tools and handling equipment. Do not use tools that have been contaminated by contact with iron or steel.

C. Welding: General:
1. Make welds full penetration type, unless otherwise indicated on the Drawings.
2. Remove backing bars and weld tabs after completion of weld. Repair defective welds observed after removal of backing bars and weld tabs.

D. Welding: Carbon steel:
1. In accordance with AWS D1.1:
   a. Weld ASTM A36 and ASTM A992 structural steel, and ASTM A500 and ASTM A501 structural tubing with electrodes in accordance with AWS A5.1, using E70XX electrodes; AWS A5.17, using F7X-EXXX electrodes; or AWS A5.20, using E7XT-X electrodes.

E. Welding: Stainless steel:
1. In accordance with AWS D1.6.
2. Field welding of stainless steel will be permitted only at locations indicated on the Drawings.
3. Passivation of field-welded surfaces:
   a. Provide cleaning, pickling and passivating as specified in the Fabrication article of this Section. Clean using Derustit stainless steel cleaner, or equal.

F. Interface with other products:
1. Where steel members and fasteners come in contact with dissimilar metals (aluminum, stainless steel, etc.), separate or isolate the dissimilar metals with isolating sleeves and washers as specified in Section 05190 - Mechanical Anchoring and Fastening to Concrete and Masonry.

G. Fasteners: General:
1. Install bolts to project 2 threads minimum, but 1/2 inch maximum beyond nut.
2. Anchor bolts and anchor rods: Install as specified in Section 05190 - Mechanical Anchoring and Fastening to Concrete and Masonry.
   a. Unless otherwise specified, tighten nuts on anchor bolts and anchor rods specified in Section 05190 - Mechanical Anchoring and Fastening to Concrete and Masonry to the “snugtight” condition.

H. Fasteners: High-strength carbon steel bolts:
   1. Connections with high-strength bolts shall be in accordance with the RCSC Specification for Structural Joints Using High-Strength Bolts.
   2. Provide slip-critical joints at bolted connections.
   2. Joints: Slip-critical.
      a. Confirm that faying surfaces at connections are free of dirt and other foreign material, have been blast cleaned, and are free of coatings and inadvertent overspray in accordance with the RCSC Specification.
      b. Furnish hardened flat washers in accordance with ASTM F436:
         1) On outer plies with slotted holes.
         2) When one or more plies of the connected material has a yield strength less than 40 ksi.
         3) Under element, nut, or bolt head, turned in tightening.
      c. Install tension indicator washers, placed in accordance with ASTM F959, Figure X1, to confirm adequate tightening of bolts.
      d. Tighten bolts to full pretension.

I. Fasteners: Stainless steel bolts:
   1. Connections shall be slip-critical joints unless otherwise indicated on the Drawings.
   2. Prior to installing nuts, coat threads of stainless steel fasteners with thread coating to prevent galling of threads.
   3. Rotate nuts using a slow, smooth action without interruptions. Avoid over-tightening.
   4. Joints: Slip-critical.
      a. Confirm that faying surfaces at connections are free of dirt and other foreign material, have been grit blasted, and are free of coatings and inadvertent overspray in accordance with the RCSC Specification and AISC 370-21.
      b. Furnish hardened flat washers in accordance with AISC 370-21:
         1) Under element, nut, or bolt head, turned in tightening.
      c. Tighten bolts to full pretension.
      d. Stainless steel bolts shall not be reused after they have been tightened to their design preload.

## 3.03 FIELD QUALITY CONTROL

A. As specified in Section 01450 - Quality Control and Inspections.

## 3.04 FIELD QUALITY ASSURANCE

A. As specified in Section 01450 - Quality Control and Inspections.

B. Special inspections, special tests, and structural observation:
   1. As specified in Section 01455 – Special Tests and Inspections.

END OF SECTION

# SECTION 05140

# STRUCTURAL ALUMINUM

## PART 1 GENERAL

### 1.01 SUMMARY

A. Section includes:
   1. Structural aluminum products, including sheet, pipe, extrusions, and associated accessories.

### 1.02 REFERENCES

A. American Welding Society (AWS):
   1. A5.10 - Specification for Bare Aluminum and Aluminum-Alloy Welding Electrodes and Rods.
   2. D1.2 - Structural Welding Code - Aluminum.

B. ASTM International (ASTM):
   1. B209 - Standard Specification for Aluminum and Aluminum-Alloy Sheet and Plate.
   2. B221 - Standard Specification for Aluminum and Aluminum-Alloy Extruded Bars, Rods, Wire, Profiles, and Tubes.
   3. B308 - Standard Specification for Aluminum-Alloy 6061-T6 Standard Structural Profiles.

### 1.03 SUBMITTALS

A. Quality control Submittals:
   1. Test Reports: Certified copies of mill tests or reports from a recognized commercial laboratory including chemical and tensile properties of each shipment of structural metal or part thereof having common properties. Tests and analyses shall be made in accordance with applicable ASTM Standards.
   2. Welder’s certificates.

### 1.04 QUALITY ASSURANCE

A. Qualifications:
   1. Perform welding of structural metals with welders who have current AWS certificate for the type of welding to be performed.
   2. Notify Engineer 24 hours minimum before starting shop or field welding.
   3. Engineer may check materials, equipment, and qualifications of welders.
   4. Remove welders performing unsatisfactory work or require to requalify.
   5. Engineer may use gamma ray, magnetic particle dye penetrant, or other aids to visual inspection to examine any part of welds or all welds.
   6. Contractor shall bear costs of retests on defective welds.
   7. Contractor shall bear costs in connection with qualifying welders.

## PART 2 PRODUCTS

### 2.01 MATERIALS

A. Structural sheet aluminum: ASTM B209, Alloy 6061-T6.

B. Structural aluminum: ASTM B308, Alloy 6061-T6.

C. Extruded aluminum: ASTM B221, Alloy 6063-T42.

D. Isolating sleeves and washers:
   1. As indicated on the Drawings and as specified in Section 05190 - Mechanical Anchoring and Fastening to Concrete and Masonry.

E. Miscellaneous materials:
   1. Furnish supplementary parts necessary to complete each item even where such work is neither definitely indicated on the Drawings nor specified.
   2. Size, form, attachment, and location shall conform to the best of current practice.
   3. In accordance with applicable ASTM Standards for materials not otherwise specified.

### 2.02 FABRICATION

A. Aluminum layout:
   1. Center punch hole centers, and punch or scribe cutoff lines, except where marks would remain on fabricated material.
   2. Apply temperature correction where necessary in layout of critical dimensions. Use a coefficient of expansion of 0.000013 per degree of Fahrenheit.

B. Cutting aluminum:
   1. Material 1/2-inch thick or less: Shear, saw, or cut with a router.
   2. Material more than 1/2-inch thick: Saw or rout.
   3. Make cut edges true and smooth, free from excessive burrs or ragged breaks.
   4. Avoid reentrant cuts wherever possible. Where used, fillet by drilling prior to cutting.
   5. Do not flame cut aluminum alloys.
   6. Punch or drill rivet or bolt holes to finished size before assembly:
      a. Make finished diameter of holes for bolts 1/16-inch maximum larger than nominal bolt diameter.
      b. Make holes cylindrical and perpendicular to principal surface.
      c. Do not permit holes to drift in a manner to distort metal.

C. Aluminum forming and assembly:
   1. Do not heat structural aluminum, except as follows:
      a. Heat aluminum to 400 degrees Fahrenheit for 30 minutes maximum, to facilitate bending or welding.
      b. Heat only when proper temperature controls and supervision can ensure that limitations on temperature and time are observed.

D. Before assembly, remove chips lodged between contacting surfaces.

E. Welding aluminum:
   1. Perform welding of aluminum in accordance with AWS D1.2.
   2. Weld aluminum in accordance with the following:
      a. Preparation:
         1) Remove dirt, grease, forming or machining lubricants, and organic materials from areas to be welded by cleaning with a suitable solvent or by vapor degreasing.
         2) Additionally, etch or scratch brush to remove oxide coating just prior to welding when inert gas tungsten arc welding method is used.
         3) Oxide coating may not need to be removed if welding is performed by automatic or semi-automatic inert gas shielded metal arc.
         4) Suitably prepare edges to ensure 100 percent penetration in butt welds by sawing, chipping, machining, or shearing. Do not cut with oxygen.
      b. Filler metal: Aluminum alloys in accordance with AWS A5.10 and AWS classification ER 4043, ER 5654, ER 5554, ER 5183, ER 5356, or ER 5556.
      c. Perform welding of structures which are to be anodized using filler alloys which will not discolor when anodized, AWS ER 5654, ER 5554, ER 5183, ER 5356, or ER 5556.
      d. Perform welding by using a non-consumable tungsten electrode with filler metal in an inert gas atmosphere (TIG) or using a consumable filler metal electrode in an inert gas atmosphere (MIG).
      e. Do not use welding process that requires use of a welding flux.
      f. Neatly make welded closures.
      g. Where weld material interferes with fit or is unsightly in appearance, grind it smooth.
      h. Make welds full penetration welds unless otherwise indicated on the Drawings.

## 2.03 FINISHES

A. Coating for Aluminum in contact with concrete or masonry:
   1. Epoxy mastic.
      a. Manufacturers: One of the following or equal:
         1) Carboline, Carbomastic 15.
         2) International Paint, Bar-Rust 231.
         3) Tnemec, Series 135.

# PART 3 EXECUTION

## 3.01 EXAMINATION

A. Verification of conditions: Examine Work in place to verify that it is satisfactory to receive the Work of this Section. If unsatisfactory conditions exist, do not begin this Work until such conditions have been corrected.

## 3.02 INSTALLATION

A. Install structural aluminum products as indicated on the Drawings and specified.

B. Install structural aluminum products accurately and securely, true to level, plumb, in correct alignment and grade, with all parts bearing or fitting structure or equipment for which intended.

C. Do not cock out of alignment, redrill, reshape, or force fit fabricated items.

D. Place anchor bolts or other anchoring devices accurately and make surfaces that bear against structural items smooth and true to level.

E. Rigidly support and brace structural products needing special alignment to preserve straight, level, even, smooth lines, and keep braced until concrete, grout, or dry pack mortar has hardened for a minimum 48-hour period.

F. Interface with other products:
   1. Where aluminum comes in contact with dissimilar metals, use stainless steel bolts or anchors and separate or isolate the dissimilar metals with isolating sleeves and washers as specified in Section 05190 - Mechanical Anchoring and Fastening to Concrete and Masonry.
   2. Do not paint exposed aluminum surfaces. Remove markings and leave surfaces clean. Coat those parts of aluminum which will be cast into concrete, and those parts of aluminum which will come in contact with masonry, concrete, or wood, with a minimum of 2 coats of specified coating for protection of similar metals.
   3. Coat those parts of aluminum that will be cast into concrete or that will be in contact with concrete, grout, masonry, wood, or other materials that will cause the aluminum to corrode, as specified in Section 09960 - High-Performance Coatings.

END OF SECTION

## SECTION 05190

## MECHANICAL ANCHORING AND FASTENING TO CONCRETE AND MASONRY

### PART 1 GENERAL

### 1.01 SUMMARY

A. Section includes requirements for:
   1. Cast-in anchors and fasteners.
   2. Post-installed steel anchors and fasteners.
   3. Appurtenances for anchoring and fastening.

### 1.02 REFERENCES

A. American Concrete Institute (ACI):
   1. 355.2 - Qualification of Post-Installed Mechanical Anchors in Concrete & Commentary.

B. American National Standards Institute (ANSI):
   1. B212.15 - Cutting Tools - Carbide-tipped Masonry Drills and Blanks for Carbide-tipped Masonry Drills.

C. American Welding Society (AWS):
   1. D1.1 - Structural Welding Code - Steel.
   2. D1.6 - Structural Welding Code - Stainless Steel.

D. ASTM International (ASTM):
   1. A36 - Standard Specification for Carbon Structural Steel.
   2. A53 - Standard Specification for Pipe, Steel, Black and Hot-Dipped, Zinc-Coated, Welded and Seamless.
   3. A108 - Standard Specification for Steel Bars, Carbon and Alloy, Cold Finished.
   4. A123 - Standard Specification for Zinc (Hot-Dip Galvanized) Coatings on Iron and Steel Products.
   5. A153 - Standard Specification for Zinc Coating (Hot-Dip) on Iron and Steel Hardware.
   6. A240 - Standard Specification for Chromium and Chromium Nickel Stainless Steel Plate, Sheet, and Strip for Pressure Vessels and for General Applications.
   7. A380 - Standard Practice for Cleaning, Descaling, and Passivation of Stainless Steel Parts, Equipment, and Systems.
   8. B633 - Standard Specification for Electrodeposited Coatings of Zinc on Iron and Steel.
   9. B695 - Standard Specification for Coatings of Zinc Mechanically Deposited on Iron and Steel.
   10. E488 - Standard Test Methods for Strength of Anchors in Concrete Elements.
   11. F436 - Standard Specification for Hardened Steel Washers.
   12. F593 - Standard Specification for Stainless Steel Bolts, Hex Cap Screws and Studs.

13. F594 - Standard Specification for Stainless Steel Nuts.
14. F1554 - Standard Specification for Anchor Bolts, Steel, 36, 55 and 105-ksi Yield Strength.
15. F2329 - Standard Specification for Zinc Coating, Hot-Dip, Requirements for Application to Carbon and Alloy Steel Bolts, Screws, Washers, Nuts, and Special Threaded Fasteners.

E. International Code Council Evaluation Service, Inc. (ICC-ES):
1. AC193 - Acceptance Criteria for Mechanical Anchors in Concrete Elements.

## 1.03 TERMINOLOGY

A. The words and terms listed below are not defined terms that require initial capital letters, but, when used in this Section, have the indicated meaning.
1. Built-in anchor: Headed bolt or assembly installed in position before filling surrounding masonry units with grout.
2. Cast-in anchor: Headed bolt or assembly installed in position before placing plastic concrete around.
3. Overhead installations: Fasteners installed on overhead surfaces where the longitudinal axis of the fastener is more than 45 degrees above a horizontal line so the fastener resists sustained tension loads.
4. Passivation: Chemical treatment of stainless steel with a mild oxidant for the purpose of enhancing the spontaneous formation of the steel's protective passive film.
5. Post-installed anchor: Fastener or assembly installed in hardened concrete or finished masonry construction, typically by drilling into the structure and inserting a steel anchor assembly.
6. Terms relating to structures or building environments as used with reference to anchors and fasteners:
   a. Corrosive locations: Describes interior and exterior locations as follows:
      1) Locations used for delivery, storage, transfer, or containment (including spill containment) of chemicals used for plant treatment processes.
      2) Exterior and interior locations at the following treatment structures:
         a) Wastewater treatment facilities: Solids stream:
            (1) All locations.
   b. Wet and moist locations: Describes locations, other than "corrosive locations," that are submerged, are immediately above liquid containment structures, or are subject to frequent wetting, splashing, or wash down. Includes:
      1) Exterior portions of buildings and structures.
      2) Liquid-containing structures:
         a) Locations at and below the maximum operating liquid surface elevation.
         b) Locations above the maximum operating liquid surface elevation and:
            (1) Below the top of the walls containing the liquid.
            (2) At the inside faces and underside surfaces of a structure enclosing or spanning over the liquid (including walls, roofs, slabs, beams, or walkways enclosing the open top of the structure).

3) Liquid handling equipment:
   a) Bases of pumps and other equipment that handles liquids.
4) Indoor locations exposed to moisture, splashing, or routine wash down during normal operations, including floors with slopes toward drains or gutters.
5) Other locations indicated on the Drawings.

c. Other locations:
   1) Interior dry areas where the surfaces are not exposed to moisture or humidity in excess of typical local environmental conditions.

## 1.04 DELEGATED DESIGN

A. Calculations.

B. Contractor or Subcontractor shall retain a licensed Professional Engineer to perform Delegated Design.
   1. Holding a current license to perform the specified design in the same jurisdiction as the Project Site.
   2. Experienced in designing similar systems of similar complexity.

C. Responsibilities:
   1. Review and design in accordance with system performance and design criteria stated in the Contract Documents.
      a. Prepare written requests for clarifications or interpretations of performance or design criteria for submittal to the Engineer by the Contractor.
   2. Sign and seal design reports, calculations, design drawings and specifications, and other design Submittals for the Delegated Design Work.
   3. Review and submit written approval of Submittals related to the Delegated Design Work.
   4. Design modifications to the Delegated Design Work as required.
   5. Visit the Site, as required, to verify that installation of the Delegated Design Work is in conformance with the Delegated Design Drawings and Specifications.
   6. Submit through Contractor to Engineer written, signed, and sealed certification that the installed Delegated Design Work complies with Contractor's Professional Engineer's design.

D. Engineer response will be either of the following:
   1. Approved. Make Corrections Noted - See Comments:
      a. Contractor may proceed with the Work; however, all notations and comments must be incorporated into the final product.
      b. Review was for the limited purpose of determining that the document was stamped by a Professional Engineer and that such design is generally consistent with and will not negatively affect the design concept presented in the Contract Documents.
   2. Rejected - See Remarks:
      a. Contractor may not proceed with the Work described in the Submittal.

b. Submittal does not meet the intent of the Contract Documents.
c. Resubmittal of complete Submittal package is required with materials, equipment, methods, etc., that meet the requirements of the Contract Documents.

## 1.05 SUBMITTALS

A. General:
1. Submit as specified in Section 01330 - Submittal Procedures and Section 01600 - Product Requirements.

B. Product data:
1. Cast-in anchors:
a. Manufacturer's data, including catalog cuts showing anchor sizes and configuration, materials, and finishes.
2. Post-installed anchors:
a. For each anchor type, manufacturer's data, including catalog cuts showing anchor sizes and construction, materials and finishes, and load ratings.

C. Delegated Design Submittals:
1. When requesting product substitutions for post installed anchors, submit calculations, indicating the diameter, effective embedment depth and spacing of the proposed anchors, and demonstrating that the substituted product will provide load resistance that is equal to or greater than that provided by the anchors listed in this Section.

D. Samples:
1. Samples of each type of anchor, including representative diameters and lengths, if requested by the Engineer.

E. Certificates:
1. Cast-in anchors:
a. Mill certificates for steel anchors that will be supplied to the Site.
2. Post-installed anchors:
a. Manufacturer's statement or certified test reports demonstrating that anchors that will be supplied to the Site comply with the materials properties specified.

F. Test reports:
1. Post-installed anchors: For each anchor type used for the Work:
a. Current ICC-ES Report (ESR) demonstrating:
1) Acceptance of that anchor for use under the building code specified in Section 01410 - Regulatory Requirements.

G. Manufacturer's instructions:
1. Requirements for storage and handling.
2. Recommended installation procedures, including details on drilling, hole size (diameter and depth), hole cleaning and preparation procedures, anchor insertion, and anchor tightening.
3. Requirements for inspection or observation during installation.

H. Qualification statements:
   1. Post-installed anchors: Installer qualifications:
      a. Submit list of personnel performing installations. Include letter of training from manufacturer indicating date of manufacturer's training for each installer.

## 1.06 QUALITY ASSURANCE

A. Qualifications:
   1. Post installed anchors shall be in accordance with building code specified in Section 01410 - Regulatory Requirements.

B. Special inspection:
   1. Provide special inspection of post-installed anchors as specified in Section 01455 – Special Tests and Inspections and this Section.

## 1.07 DELIVERY, STORAGE, AND HANDLING

A. As specified in Section 01600 - Product Requirements.

B. Deliver post-installed anchors in manufacturer's standard packaging with labels visible and intact. Include manufacturer's installation instructions.

C. Handle and store anchors and fasteners in accordance with manufacturer's recommendations and as required to prevent damage.

D. Protect anchors from weather and moisture until installation.

## 1.08 PROJECT CONDITIONS

A. As specified in Section 01612 – Seismic Design Criteria.

B. Seismic Design Category (SDC) for structures is indicated on the Drawings.

# PART 2 PRODUCTS

## 2.01 MANUFACTURED UNITS

A. General:
   1. Furnish threaded fasteners with flat washers and hex nuts fabricated from materials corresponding to the material used for threaded portion of the anchor.
      a. Cast-in anchors: Provide flat washers and nuts as listed in the ASTM standard for the anchor materials specified.
      b. Post-installed anchors: Provide flat washers and nuts supplied for that product by the manufacturer of each anchor.

2. Size of anchors and fasteners, including diameter and length or minimum effective embedment depth: As indicated on the Drawings or as specified in this Section. In the event of conflicts, contact the Engineer for clarification.
3. Where anchors and connections are not specifically indicated on the Drawings or specified, their material, size and form shall be equivalent in quality and workmanship to items specified.

B. Materials:
1. Provide and install anchors of materials as specified in this Section.

## 2.02 CAST-IN ANCHORS AND FASTENERS

A. Anchor bolts:
1. Straight steel rod having one end with an integrally forged head, and one threaded end. Embedded into concrete with the headed end cast into concrete at the effective embedment depth indicated on the Drawings or specified, and with the threaded end left to project clear of concrete face as required for the connection to be made.
2. Furnish anchor bolts with heavy hex forged head or equivalent acceptable to the Engineer.
   a. Rods or bars with angle bend for embedment in concrete (i.e., “L” or “J” shaped anchor bolts) are not permitted in the Work.
3. Materials:
   a. Ship anchor bolts with properly fitting nuts attached.
   b. Type 316L stainless steel:
      1) Surfaces descaled, pickled, and passivated in accordance with ASTM A380.
      2) Bolts: ASTM F593, Group 2, Condition CW, coarse threads.
      3) Nuts: ASTM F594. Match alloy (group and UNS designation) and threads of bolts.
      4) Washers: Type 316L stainless steel.
   c. Galvanized steel:
      1) Hot-dip galvanized coating in accordance with ASTM F2329.
      2) Bolts: ASTM F1554, Grade 36, heavy hex, coarse thread.
      3) Nuts: ASTM A563, Grade A, heavy hex, threads to match bolt.
      4) Washers: ASTM F436, Type 1.

B. Anchor rods:
1. Straight steel rod having threads on each end. One threaded end is fitted with nuts or plates and embedded in concrete to the effective depth indicated on the Drawings**,** leaving the opposite threaded end to project clear of the concrete face as required for the connection to be made at that location.
2. Materials:
   a. Stainless steel: Type 316L:
      1) Surfaces descaled, pickled, and passivated in accordance with ASTM A380.
      2) Rod: ASTM F593, Group 2, Condition CW, coarse threads.
      3) Nuts: ASTM F594. Match alloy (group and UNS designation) and threads of rods.
      4) Washers: Type 316L stainless steel.
      5) Plates (embedded): ASTM A240.

C. Welded studs:
   1. Anchor with forged head for embedment into concrete on one end, and welding ferrule for attachment to steel on the other. Welded to steel members or plates to provide anchorage for steel connections to concrete.
   2. Shall be in accordance with AWS D1.1, Type B.
   3. Manufacturers: One of the following or equal:
      a. Nelson Stud Welding (Stanley Engineered Fastening), H4L Concrete Anchors or S3L Shear Connectors as indicated on the Drawings**.**
      b. Stud Welding Products, Headed Concrete Anchors (HCA) or Headed Shear Connectors (HSC) as indicated on the Drawings**.**
   4. Materials:
      a. Stainless steel: Type 316L.

D. Steel plates or shapes for fabrications, including assemblies with welded studs or deformed bar anchors:
   1. Stainless steel: Type 316L:
      a. Plates (embedded): ASTM A240.

## 2.03 POST-INSTALLED ANCHORS AND FASTENERS - ADHESIVE

A. Epoxy bonding of reinforcing bars, all thread rods, and threaded inserts in concrete: As specified in Section 03055 - Adhesive-Bonded Reinforcing Bars and All Thread Rods in Concrete.

## 2.04 POST-INSTALLED ANCHORS AND FASTENERS - MECHANICAL

A. General:
   1. Post-installed anchors shall hold a current ICC Evaluation Service Report demonstrating acceptance for use under the building code specified in Section 01410 - Regulatory Requirements.
      a. Acceptance report shall indicate acceptance of the product for use under the following conditions:
         1) In regions of concrete where cracking has occurred or may occur.
         2) To resist short-term loads due to wind forces.
         3) To resist short-term loading due to seismic forces for the Seismic Design Category of the structure where the product will be used.

B. Concrete anchors:
   1. Post-installed anchor assembly consisting of a threaded stud and a surrounding wedge expansion sleeve that is forced outward by torquing the center stud to transfer loads from the stud to the concrete through bearing, friction, or both. Sometimes referred to as “expansion anchors” or “wedge anchors.”
      a. Do not use slug-in, lead cinch, and similar systems relying on deformation of lead alloy or similar materials to develop holding power.
   2. Concrete expansion bolts for anchorage to concrete:
      a. Shall have a current ICC-ES Report demonstrating that the anchors have been tested and qualified for performance in both cracked and un-cracked concrete, and for short-term loading due to wind and seismic forces for Seismic Design Categories A through F in accordance with ACI 355.2 and with ICC-ES AC193 (including all mandatory tests and optional tests for seismic tension and shear in cracked concrete).

b. Performance in the current ICC-ES Report shall be “Category 1” as defined in ACI 355.2.
c. Manufacturers: One of the following:
1) Hilti, Kwik Bolt TZ2 Wedge Anchor.
2) Simpson Strong-Tie, Strong-Bolt 2 Wedge Anchor.
d. Materials. Integrally threaded stud, wedge, washer, and nut:
1) Stainless steel: Type 316L.
2) Galvanized: Carbon steel, zinc plated in accordance with ASTM B633, minimum 5 microns (Fe/Zn 5).

C. Flush shells:
1. Post-installed anchor assembly consisting of an internally threaded mandrel that is forced into a pre-drilled concrete hole with a setting tool until the top of the anchor is flush with the face of the concrete. Once installed, a removable threaded bolt is installed in the mandrel.
2. Flush shell anchors are not permitted in the Work.

D. Sleeve anchors:
1. Post-installed, torque-controlled anchor assembly consisting of an externally threaded stud with a spacer sleeve near the surface of the base material, and an expansion sleeve on the lower part of the stud. Expansion sleeve is forced outward by torquing of the center stud to transfer load.
a. Do not use slug-in, lead cinch, and similar systems relying on deformation of lead alloy or similar materials in order to develop holding power.
2. Sleeve anchors for anchorage to concrete:
a. Shall have a current ICC-ES Report demonstrating that the anchors have been tested and qualified for performance in both cracked and un-cracked concrete, and for short-term loading due to wind and seismic forces for Seismic Design Categories A through F in accordance with ACI 355.2 and with ICC-ES AC193 (including all mandatory tests and optional tests for seismic tension and shear in cracked concrete).
b. Performance in the current ICC-ES Report shall be “Category 1” as defined in ACI 355.2.
c. Manufacturers: One of the following or equal:
1) DEWALT/Powers, Power Bolt+ Heavy Duty Sleeve Anchor.
2) Hilti, HSL-3 Heavy Duty Expansion (sleeve) Anchor.
d. Materials:
1) Stainless steel: Type 316L.

## 2.05 APPURTENANCES FOR ANCHORING AND FASTENING

A. Anchor bolt sleeves:
1. Fabricated steel sleeves:
a. Construct as specified in Section 05500 - Metal Fabrications.
b. Fabricate to the following dimensions unless otherwise indicated on the Drawings:
1) Inside diameter: At least 2 inches greater than bolt diameter.
2) Inside length: Not less than 10-bolt diameters.

3) Bottom plate:
a) Square plate with dimensions equal to the outside diameter of the sleeve plus 1/2 inch each side.
b) Thickness equal to or greater than one-half of the anchor bolt diameter.

c. Carbon steel:
1) Fabricated from ASTM A36 plate and ASTM A53, Grade B pipe.
2) Welded connections: Conform to requirements of AWS D1.1.
3) Hot dip galvanized in accordance with ASTM A153.

d. Stainless steel:
1) Fabricated from ASTM A240 plate and pipe. Type 316L to match type of the anchor bolt.
2) Welded connections: In accordance with AWS D1.6.

B. Isolating sleeves and washers:
1. Manufacturers: One of the following or equal:
a. Allied Corrosion Industries.
b. Central Plastics Co.
2. Sleeves: Mylar, 1/32-inch thick, 4,000 volts per mil dielectric strength, of proper size to fit bolts and extending half way into both steel washers.
3. One sleeve required for each bolt.
4. Washers: Inside diameter of washers shall fit over the isolating sleeve, and both the steel and isolating washers shall have the same inside diameter and outside diameter.
a. Proper size to fit bolts.
b. Two 1/8-inch thick steel washers for each bolt.
c. G3 Phenolic: 2 insulating washers are required for each bolt:
1) Thickness: 1/8 inch.
2) Base material: Glass.
3) Resin: Phenolic.
4) Water absorption: 2 percent.
5) Hardness (Rockwell): 100.
6) Dielectric strength: 450 volts per mil.
7) Compression strength: 50,000 pounds per square inch.
8) Tensile strength: 20,000 pounds per square inch.
9) Maximum operating temperature: 350 degrees Fahrenheit.

C. Coating for repair of galvanized surfaces:
1. Manufacturers: The following or equal:
a. Jelt, Galvinox.

D. Thread coating: For use with threaded stainless steel fasteners:
1. Manufacturers: One of the following or equal:
a. Bostik, Never-Seez.
b. Oil Research, Inc., WLR No. 111.

## PART 3 EXECUTION

### 3.01 EXAMINATION

A. Examine Work in place to verify that it is satisfactory to receive the Work of this Section. If unsatisfactory conditions exist, do not begin this Work until such conditions have been corrected.

### 3.02 INSTALLATION - GENERAL

A. Where anchors and fasteners are not specifically indicated on the Drawings or specified, make attachments with materials specified in this Section.

B. Substitution of anchor types:
   1. Post-installed anchors may not be used as an alternative to cast-in/built-in anchors at locations where the latter are indicated on the Drawings.
   2. Cast-in/built-in anchors may be used as an alternative to post-installed mechanical anchors at locations where the latter are indicated on the Drawings.

C. Protect products from damage during installation. Protect threads and threaded ends.

D. Accurately locate and position anchors and fasteners:
   1. Unless otherwise indicated on the Drawings, install anchors perpendicular to the surfaces from which they project.
   2. Install anchors so that at least 2 threads, but not more than 1/2 inch of threaded rod, projects past the top nut.

E. Interface with other products:
   1. Where steel anchors come in contact with dissimilar metals (aluminum, stainless steel, etc.), use stainless steel anchors and separate or isolate dissimilar metals using isolating sleeves and washers.
   2. Prior to installing nuts, coat threads of stainless steel fasteners with thread coating to prevent galling of threads.

### 3.03 INSTALLATION - CAST-IN ANCHORS

A. General:
   1. Accurately locate cast-in and built-in anchors.
      a. Provide anchor setting templates to locate anchor bolts and anchor rods. Secure templates to formwork.
      b. Brace or tie off embedments as necessary to prevent displacement during placement of plastic concrete or of surrounding masonry construction.
      c. Position and tie cast-in and built-in anchors in place before beginning placement of concrete or grout. Do not “stab” anchors into plastic concrete, mortar, or grout.
      d. Do not allow cast-in anchors to touch reinforcing steel. Where cast-in anchors are within 1/4 inch of reinforcing steel, isolate the metals by wrapping the anchors with a minimum of 4 wraps of 10-mil polyvinyl chloride tape in area adjacent to reinforcing steel.

2. For anchoring at machinery bases subject to vibration, use 2 nuts, with 1 serving as a locknut.
3. Where anchor bolts or anchor rods are indicated on the Drawings as being for future use, thoroughly coat exposed surfaces that project from concrete or masonry with non-oxidizing wax. Turn nuts down full length of the threads, and neatly wrap the exposed thread and nut with a minimum of 4 wraps of 10-mil waterproof polyvinyl tape.

B. Anchor bolts:
1. Minimum effective embedment: 10-bolt diameters, unless a longer embedment is indicated on the Drawings.
2. Where indicated on the Drawings, set anchor bolts in galvanized steel or stainless steel sleeves to allow for adjustment.

C. Welded studs:
1. Butt weld to steel fabrications with automatic stud welding gun as recommended by the manufacturer.
2. Ensure that butt weld develops full strength of the stud.

## 3.04 INSTALLATION - POST-INSTALLED ADHESIVE ANCHORS

A. Epoxy and acrylic adhesive bonding of reinforcing bars, all thread rods, and internally threaded inserts in concrete: As specified in Section 03055 - Adhesive-Bonded Reinforcing Bars and All Thread Rods in Concrete.

## 3.05 INSTALLATION - POST-INSTALLED MECHANICAL ANCHORS

A. General:
1. Install anchors in accordance with the manufacturer's instructions, ACI 355.2, the anchor's ICC-ES Report. Where conflict exists between the ICC-ES Report and the requirements specified in this Section, the requirements of the ICC-ES Report shall control.
2. Where anchor manufacturer recommends the use of special tools and/or specific drill bits for installation, provide and use such tools.
3. After anchors have been positioned and inserted into concrete or masonry, do not:
   a. Remove and reuse/reinstall anchors.
   b. Loosen or remove bolts or studs.

B. Holes drilled into concrete and masonry:
1. Do not drill holes in concrete or masonry until the material has achieved its minimum specified compression strength (f'c or f'm).
2. Accurately locate holes:
   a. Before drilling holes, use a reinforcing bar locator to identify the position of reinforcing steel, conduit, and other embedded items within a 6-inch radius of each proposed hole.
   b. If the hole depth exceeds the range of detection for the rebar locator, the Engineer may require radiographs of the area designated for investigation before drilling commences.

3. Exercise care to avoid damaging existing reinforcement and other items embedded in concrete and masonry.
   a. If embedments are encountered during drilling, immediately stop work and notify the Engineer. Await the Engineer's instructions before proceeding.
4. Unless otherwise indicated on the Drawings, drill holes perpendicular to the concrete surface into which they are placed.
5. Drill using anchor manufacturer's recommended equipment and procedures:
   a. Unless otherwise recommended by the manufacturer, drill in accordance with the following:
      1) Drilling equipment: Electric or pneumatic rotary type with light or medium impact. Where edge distances are less than 2 inches, use lighter impact equipment to prevent micro-cracking and concrete spalling during drilling process.
      2) Drill bits: Carbide-tipped in accordance with ANSI B212.15. Hollow drills with flushing air systems are preferred.
6. Drill holes at manufacturer's recommended diameter and to depth required to provide the effective embedment indicated.
7. Clean and prepare holes as recommended by the manufacturer and as required by the ICC-ES Report for that anchor.
   a. Unless otherwise recommended by anchor manufacturer, remove dust and debris using brushes and clean compressed air.
   b. Repeat cleaning process as required by the manufacturer's installation instructions.
   c. When cleaning holes for stainless steel anchors, use only stainless steel or non-metallic brushes.

C. Insert and tighten (or torque) anchors in compliance with the manufacturer's installation instructions.
   1. Once anchor is tightened (torque), do not attempt to loosen or remove its bolt or stud.

D. Concrete anchors: Minimum effective embedment lengths unless otherwise indicated on the Drawings:

| **Concrete Anchors** | | | |
|---|---|---|---|
| | **Minimum Effective Embedment Length** | | **Minimum Member Thickness** |
| **Nominal Diameter** | **In Concrete** | **In Grouted Masonry** | |
| 3/8 inch | 2-1/2 inch | 2-5/8 inch | 8 inch |
| 1/2 inch | 3-1/2 inch | 3-1/2 inch | 8 inch |
| 5/8 inch | 4-1/2 inch | 4-1/2 inch | 10 inch |
| 3/4 inch | 5 inch | 5-1/4 inch | 12 inch |

E. Flush shell anchors:
   1. Not permitted in the Work.
   2. If equipment manufacturer's installation instructions recommend the use of flush shell anchors, contact the Engineer for instructions before proceeding.

F. Sleeve anchors:
   1. Minimum effective embedment lengths unless otherwise indicated on the Drawings:

| Sleeve Anchors | | | |
|---|---|---|---|
| Nominal Diameter | Minimum Effective Embedment Length | | Minimum Member Thickness |
| | In Concrete | In Grouted Masonry | |
| M8 (1/2 inch) | 70 mm (2-3/4 inch) | Not accepted | 100 mm (8 inch) |
| M10 (5/8 inch) | 76 mm (3 inch) | Not accepted | 250 mm (10 inch) |
| M12 (3/4 inch) | 80 mm (3-1/4 inch) | Not accepted | 300 mm (12 inch) |

   2. Install with the sleeve fully engaged in the base material.

G. Screw anchors:
   1. Minimum effective embedment lengths unless otherwise indicated on the Drawings:

| Screw Anchors | | | |
|---|---|---|---|
| Nominal Diameter | Minimum Effective Embedment Length | | Minimum Member Thickness |
| | In Concrete | In Grouted Masonry | |
| 3/8 inch | 2-1/2 inch | 3-1/4 inch | 8 inch |
| 1/2 inch | 3-1/4 inch | 4-1/2 inch | 8 inch |
| 5/8 inch | 4 inch | 5 inch | 10 inch |
| 3/4 inch | 5-1/2 inch | 6-1/4 inch | 12 inch |

   2. Install using equipment and methods recommended by the manufacturer. Continue driving into hole until the washer head is flush against the item being fastened.

H. Undercut concrete anchors:
   1. Minimum effective embedment lengths unless otherwise indicated on the Drawings:

| Undercut Anchors | | | |
|---|---|---|---|
| Nominal Diameter (bolt) | Minimum Effective Embedment Length | | Minimum Member Thickness(1) |
| | In Concrete | In Grouted Masonry | |
| M10 (3/8 inch) | 100 mm (4 inch) | Not accepted | 200 mm (8 inch) |
| M12 (1/2 inch) | 125 mm (5 inch) | Not accepted | 350 mm (14 inch) |
| M16 (5/8 inch) | 190 mm (7-1/2 inch) | Not accepted | 460 mm (18 inch) |
| M20 (7/8 inch) | 250 mm (10 inch) | Not accepted | 510 mm (20 inch) |

Notes:

(1) Thickness indicated is for pre-set units. If through-set units are accepted, obtain minimum member thickness requirements from the Engineer.

2. Installations of undercut anchors shall not be allowed where edge distances are less than 12 times the nominal diameter of the anchor stud.
3. Undercut bottom of hole using cutting tools manufactured for this purpose by the manufacturer of the undercut anchors being placed.

## 3.06 FIELD QUALITY CONTROL

A. Provide quality control over the Work of this Section as specified in Section 01450 - Quality Control and Inspections.
   1. Expenses associated with Work described by the following paragraphs shall be paid by the Contractor.

B. Post-installed anchors:
   1. Review anchor manufacturer's installation instructions and requirements of the Evaluation Service Report (hereafter referred to as "installation documents") for each anchor type and material.
   2. Observe hole-drilling and cleaning operations for conformance with the installation documents.
   3. Certify in writing that the depth and location of anchor holes, and the torque applied for setting the anchors conforms to the requirements of the installation documents.

## 3.07 FIELD QUALITY ASSURANCE

A. Owner's representative will provide on-site observation and field quality assurance for the Work of this Section.
   1. Expenses associated with work described by the following paragraphs shall be paid by the Owner.

B. Field inspections and special inspections:
   1. Required inspections: Observe construction for conformance to the approved Contract Documents, the accepted Submittals, and the manufacturer's installation instructions for the products used.
   2. Record of inspections:
      a. Maintain record of each inspection.
      b. Submit copies to the Engineer upon request.
   3. Statement of special inspections: At the end of the Project, prepare and submit to the Engineer and the authority having jurisdiction inspector's statement that the Work was constructed in general conformance with the approved Contract Documents, and that deficiencies observed during construction were resolved.

C. Special inspections: Anchors cast into concrete and built into masonry.
   1. Provide special inspection during positioning of anchors and placement of concrete or masonry (including mortar and grout) around the following anchors:
      a. Anchor bolts.
      b. Anchor rods.
      c. Concrete inserts (all types).
      d. Welded studs.

2. During placement, provide continuous special inspection at each anchor location to verify that the following elements of the installation conform to the requirements of the Contract Documents.
    a. Anchor:
        1) Type and dimensions.
        2) Material: Galvanized steel, Type 316L stainless steel, as specified in this Section or indicated on the Drawings.
        3) Positioning: Spacing, edge distances, effective embedment, and projection beyond the surface of the construction.
        4) Reinforcement at anchor: Presence, positioning, and size of additional reinforcement at anchors indicated on the Drawings.
3. Following hardening and curing of the concrete or masonry surrounding the anchors, provide periodic special inspection to observe and confirm the following:
    a. Base material (concrete or grouted masonry):
        1) Solid and dense concrete or grouted masonry material within required distances surrounding anchor.
        2) Material encapsulating embedment is dense and well-consolidated.

D. Special inspections: Post-installed mechanical anchors placed in hardened concrete and in grouted masonry.
1. Provide special inspection during installation of the following anchors:
    a. Concrete anchors.
2. Unless otherwise noted, provide periodic special inspection during positioning, drilling, placing, and torquing of anchors.
    a. Provide continuous special inspection for post-installed anchors in “overhead installations” as defined in this Section.
3. Requirements for periodic special inspection:
    a. Verify items listed in the following paragraphs for conformance to the requirements of the Contract Documents and the Evaluation Report for the anchor being used. Observe the initial installation of each type and size of anchor, and subsequent installation of the same anchor at intervals of not more than 4 hours.
        1) Any change in the anchors used, in the personnel performing the installation, or in procedures used to install a given type of anchor shall require a new “initial inspection.”
    b. Substrate: Concrete or masonry surfaces receiving the anchor are sound and of a condition that will develop the anchor’s rated strength.
    c. Anchor:
        1) Manufacturer, type, and dimensions (diameter and length).
        2) Material (galvanized, or Type 316L stainless steel).
    d. Hole:
        1) Positioning: Spacing and edge distances.
        2) Drill bit type and diameter.
        3) Diameter, and depth.
        4) Hole cleaned in accordance with the manufacturer’s required procedures. Confirm multiple repetitions of cleaning when recommended by the manufacturer.
        5) Anchor’s minimum effective embedment.
        6) Anchor tightening/installation torque.

4. Requirements for continuous special inspection:
    a. Special inspector shall observe all aspects of anchor installation, except that holes may be drilled in their absence provided that they confirm the use of acceptable drill bits before drilling, and later confirms the diameter, depth, and cleaning of drilled holes.

E. Field tests:
1. Owner's Representative may, at any time, request testing to confirm that materials being delivered and installed conform to the requirements of the Specifications.
    a. If such additional testing shows that the materials do not conform to the specified requirements, the Contractor shall pay the costs of these tests.
    b. If such additional testing shows that the materials do conform to the specified requirements, the Owner shall pay the costs of these tests.

## 3.08 NON-CONFORMING WORK

A. Remove misaligned or non-performing anchors.

B. Fill empty anchor holes and repair failed anchor locations as specified in Section 03600 using high-strength, non-shrink, non-metallic grout.

C. If more than 10 percent of all tested anchors of a given diameter and type fail to achieve their specified torque or proof load, the Engineer will provide directions for required modifications. Make such modifications, up to and including replacement of all anchors, at no additional cost to the Owner.

## 3.09 SCHEDULES

A. Stainless steel: Provide and install stainless steel anchors at the following locations.
1. At locations indicated on the Drawings**.**

END OF SECTION

# SECTION 05310

# STEEL DECKING

## PART 1 GENERAL

### 1.01 SUMMARY

A. Section includes: Steel deck for floors and roofs, and associated accessories.

### 1.02 REFERENCES

A. ASTM International (ASTM):
   1. A484 - Standard Specification for General Requirements for Stainless Steel Bars, Billets, and Forgings.
   2. A666 Specification for Annealed or Cold-Worked Austenitic Stainless Steel Sheet, Strip, Plate, and Flat Bar.

B. American Welding Society (AWS):
   1. D1.6 - Structural Welding Code - Stainless Steel.

### 1.03 SUBMITTALS

A. Product data.

B. Shop drawings.

### 1.04 DELIVERY, STORAGE, AND HANDLING

A. Storage and protection:
   1. Store steel deck at the site stacked on platforms or pallets and covered with tarpaulins or other suitable weathertight covering.
   2. Do not use steel deck for storage or working platform.
   3. Remove damaged, unlabeled, untagged, rusty, and deteriorated steel deck material from the job site.

## PART 2 PRODUCTS

### 2.01 MANUFACTURERS

A. One of the following or equal:
   1. James River Steel.
   2. O’Donnell Metal Deck & Bar Joist.

### 2.02 MATERIALS

A. Sheet steel: ASTM A653, G 90 minimum coating designation.

## 2.03 FABRICATION

A. Steel deck shall be formed:
   1. So every sheet is identical and will register perfectly with adjacent sheets.
   2. In accordance with building code as specified in Section 01410 - Regulatory Requirements.

B. Decking used with concrete fill shall be deformed to develop composite action between the deck and the concrete.

C. Furnish minimum gauge, deck thickness, section modulus, moment of inertia, and allowable diaphragm shear per foot of deck width that is not less than for type deck sections indicated on the Drawings.

D. Treat exposed roof deck with phosphate.

E. Furnish roof deck ready to receive field painting without further pretreatment. Paint exposed roof deck in accordance with Contract Documents.

F. Accessories:
   1. Furnish all accessories indicated on the Drawings or needed to completed work.
   2. Minimum required gauges:
      a. Sump pans: 14 gauge.
      b. All other accessories: 20 gauge unless otherwise indicated on the Drawings.

G. Welding and electrodes: In accordance with AWS D1.6.

H. Furnish roof decking in lengths to minimize number of splices.

I. Furnish steel deck complete, including cutting, shaping, fitting, drilling, welding, ridge plates, valley plates, reinforcing plates for openings, and miscellaneous pieces necessary for proper installation.

# PART 3 EXECUTION

## 3.01 EXAMINATION

A. Verification of conditions: Examine work in place to verify that it is satisfactory to receive the work of this Section. If unsatisfactory conditions exist, do not begin this work until such conditions have been corrected.

## 3.02 INSTALLATION

A. Decking shall span over at least 3 spans wherever possible.

B. Do not damage or overload roof deck during installation.

C. Do not use steel deck for storage or as a working platform until sheets have been welded in position.

D. Do not exceed maximum uniformly distributed load of 20 pounds per square foot.

E. Install decking in straight and continuous rows as far as practicable, with ribs at right angles to supporting members.

F. For each end of deck section, provide 3 inches minimum bearing on supports. For sections that abut each other, each piece shall bear a minimum of 3 inches on the support. This requires a 6 inch minimum flange width. For cases where the minimum bearing cannot be obtained, notify the Engineer.

G. Electric arc weld deck sections to bearing plates, supports at butt joints, at intermediate supports, side supports, and at end supports as indicated on the Drawings. Do not burn through the deck. Remove all slag.

H. Fasten the longitudinal joints between deck sections together by the method indicated on the Drawings.

I. Neatly cut and fit openings in roof deck, and reinforce with structural steel members as indicated on the Drawings.

J. Paint welds as specified.

K. Install roof deck free of dents and bent members.

L. Reinforce all holes and openings in steel deck as indicated on the Drawings.

M. Piping, conduit, equipment, and other services: Do not hang from decking.

N. Install all accessories required to complete work.

O. Suspended items:
   1. Ceilings and ductwork:
      a. Do not attach hangers to deck within the center 1/3 of span.
      b. Only 1 hanger may be attached to any 1 rib within 1 span.
      c. Attach wire hangers to decking with clips through hanger tabs.

## 3.03 REPAIR OF SURFACE AND COATING

A. Touch-up damage to surfaces, including cut edges and holes, in accordance with the manufacturer's printed recommendations.

B. Repair damage to factory-applied coating system in accordance with the manufacturer's printed recommendations.

## 3.04 CLEANUP

A. After erection, remove weld spatter, grease, and oil from decking.

END OF SECTION

# SECTION 05500

# METAL FABRICATIONS

## PART 1 GENERAL

### 1.01 SUMMARY

A. Section includes:
   1. Aluminum grating stair tread.
   2. Aluminum stair nosing.
   3. Cast iron stop plank grooves.
   4. Concrete inserts.
   5. Handrails and guardrails.
   6. Ladders.
   7. Manhole frames and covers.
   8. Metal gratings.
   9. Metal tread plate.
   10. Preformed channel pipe supports.
   11. Stairs.
   12. Miscellaneous metals.
   13. Associated accessories to the above items.

### 1.02 REFERENCES

A. Aluminum Association (AA):
   1. DAF-45: Designations from Start to Finish.
      a. M12-C22-A41.

B. American Association of State Highway and Transportation Officials (AASHTO):
   1. Standard Specifications for Highway Bridges.

C. American Welding Society (AWS):
   1. A2.4 - Standard Symbols for Welding, Brazing, and Nondestructive Examination.

D. ASTM International (ASTM):
   1. A36 - Standard Specification for Carbon Structural Steel.
   2. A48 - Standard Specification for Gray Iron Castings.
   3. A53 - Standard Specification for Pipe, Steel, Black and Hot-Dipped, Zinc-Coated, Welded, and Seamless.
   4. A123 - Standard Specification for Zinc (Hot-Dip Galvanized) Coatings on Iron and Steel Products.
   5. A240 - Standard Specification for Chromium and Chromium-Nickel Stainless Steel Plate, Sheet, and Strip for Pressure Vessels for General Applications.
   6. A276 - Standard Specification for Stainless Steel Bars and Shapes.
   7. A307 - Standard Specification for Carbon Steel Bolts and Studs, 60,000 PSI Tensile Strength.

8. A380 - Standard Practice for Cleaning, Descaling, and Passivation of Stainless Steel Parts, Equipment, and Systems.
9. A489 - Standard Specification for Carbon Steel Lifting Eyes.
10. A500 - Standard Specification for Cold-Formed Welded and Seamless Carbon Steel Structural Tubing in Rounds and Shapes.
11. A501 - Standard Specification for Hot-Formed Welded and Seamless Carbon Steel Structural Tubing.
12. A635 - Standard Specification for Steel, Sheet and Strip, Heavy-Thickness Coils, Hot-Rolled, Alloy, Carbon, Structural, High-Strength Low-Alloy, and High-Strength Low-Alloy with Improved Formability, General Requirements for.
13. A653 - Standard Specification for Steel Sheet, Zinc-Coated (Galvanized) or Zinc-Iron Alloy-Coated (Galvannealed) by the Hot-Dip Process.
14. A992 - Standard Specification for Structural Steel Shapes.
15. B209 - Standard Specification for Aluminum and Aluminum-Alloy Sheet and Plate.
16. B221 - Standard Specification for Aluminum and Aluminum-Alloy Extruded Bars, Rods, Wire, Profiles, and Tubes.
17. B308 - Standard Specification for Aluminum-Alloy 6061-T6 Standard Structural Profiles.
18. B429 - Standard Specification for Aluminum-Alloy Extruded Structural Pipe and Tube.
19. F593 - Standard Specification for Stainless Steel Bolts, Hex Cap Screws and Studs.
20. F3125 - Standard Specification for High Strength Structural Bolts, Steel and Alloy Steel, Heat Treated, 120 ksi and 150 ksi Minimum Tensile Strength.

E. National Association of Architectural Metal Manufacturers (NAAMM):
1. Metal Finishes Manual.

F. Occupational Safety and Health Administration (OSHA).

## 1.03 TERMINOLOGY

A. The words and terms listed below are not defined terms that require initial capital letters, but, when used in this Section, have the indicated meaning.
1. Passivation: Removal of exogenous iron or iron compounds from the surface of a stainless steel by means of chemical dissolution resulting from treatment with an acid solution that removes the surface contamination but does not significantly affect the stainless steel itself.

## 1.04 SUBMITTALS

A. Product data:
1. Aluminum grating stair tread.
2. Aluminum stair nosing.
3. Cast iron stop plank grooves.
4. Handrails and guardrails.
5. Manhole frames and covers.
6. Metal grating.

B. Shop Drawings:
   1. Handrails and guardrails:
      a. Including details on connection attachments, gates, kick plates, ladders, and angles.
      b. Indicate profiles, sizes, connection attachments, reinforcing, anchorage, size and type of fasteners, and accessories.
      c. Include erection drawings, elevations, and details where applicable.
      d. Indicate welded connections using standard AWS A2.4 welding symbols. Indicate net weld lengths.
   2. Ladders.
   3. Metal grating.
   4. Metal tread plate.
   5. Stairs.
   6. Miscellaneous metals.

C. Samples:
   1. Guardrails with specified finishes.

D. Quality Control Submittals:
   1. Design data.
   2. Test reports:
      a. Guardrails: 3 copies of certified tests performed by an independent testing laboratory certifying that guardrails meet current state and OSHA strength requirements.
      b. Gratings:
         1) Grating manufacturers' calculations showing that gratings will meet specified design load, stress, and deflection requirements for each size grating for each span.
         2) Reports of tests performed.

## PART 2 PRODUCTS

### 2.01 MATERIALS

A. Unless otherwise specified or indicated on the Drawings, structural and miscellaneous metals in accordance with the standards of the ASTM, including the following:

| Item | ASTM Standard No. | Class, Grade Type, or Alloy No. |
|---|---|---|
| **Cast Iron** | | |
| Cast iron | A48 | Class 40B |
| **Steel** | | |
| Galvanized sheet iron or steel | A653 | Coating G90 |
| Coil (plate) | A635 | -- |
| Structural plate, bars, rolled shapes, and miscellaneous items (except W shapes) | A36 | -- |
| Rolled W shapes | A992 | Grade 50 |

| Item | ASTM Standard No. | Class, Grade Type, or Alloy No. |
|---|---|---|
| Standard bolts, nuts, and washers | A307 | -- |
| High strength bolts, nuts, and hardened flat washers | F3125, Grade A325 | -- |
| Eyebolts | A489 | Type 1 |
| Tubing, cold-formed | A500 | -- |
| Tubing, hot-formed | A501 | -- |
| Steel pipe | A53 | Grade B |
| **Stainless Steel** | | |
| Plate, sheet, and strip | A240 | Type 316L |
| Bars and shapes | A276 | Type 316L |
| Bolts (Type 316L) | F593 | Group 2 Condition CW |
| **Aluminum** | | |
| Flashing sheet aluminum | B209 | Alloy 5005-H14, 0.032 inches minimum thickness |
| Structural sheet aluminum | B209 | Alloy 6061-T6 |
| Structural aluminum | B209, B308 | Alloy 6061-T6 |
| Extruded aluminum | B221 | Alloy 6063-T42 |

1. Stainless steels are designated by type or series defined by ASTM.
2. Where stainless steel is welded, use low-carbon stainless steel.

## 2.02 MANUFACTURED UNITS

A. Aluminum grating stair tread:
   1. Manufacturers: One of the following or equal:
      a. Harsco Industrial IKG, Aluminum Grating Stair Tread with Mebac® nosing.
      b. McNichols Co., Type A-Standard with corrugated angle nosing.
   2. Material: Welded aluminum grating tread with non-slip nosing and integral end plates for bolt on attachment to stair stringers.
   3. Size:
      a. Tread width: To equal tread spacing plus 1 inch minimum.
      b. Tread length: Length to suit stringer-to-stringer dimension indicated on the Drawings.
      c. Depth: 1-3/4 inches.
   4. Bolts: Type 316L stainless steel.

B. Aluminum stair nosing:
   1. Manufacturers: One of the following or equal:
      a. American Safety Tread Co., Inc., Style 801 nosing.
      b. Wooster Products, Inc., Type 101 nosing.
   2. Material: Cast aluminum abrasive nosings with aluminum oxide granules integrally cast into metal, forming permanent, nonslip, long-wearing surface.

3. For installation in cast-in-place stairs.
4. Configuration: 4 inches wide, fabricated with integrally cast stainless steel anchors at approximately 12-inch centers. Length to extend within 3 inches of stair edge on each side.

C. Cast iron stop plank grooves:
1. Manufacturers: One of the following or equal:
   a. McKinley Iron Works, Type L.
   b. Neenah Foundry Co., R-7500 Series, Type A.
2. Size: 2-inch wide groove opening by 1-1/2 inch deep, unless otherwise indicated on the Drawings.
3. Recess groove with the cast iron surface of the groove set flush with the concrete surface.

D. Concrete inserts:
1. For supporting pipe and other applications are specified in Section 15061 - Pipe Supports.

E. Handrails and guardrails:
1. General:
   a. Design and fabricate assemblies shall be in accordance with current local, state, and OSHA standards and requirements.
   b. Coordinate layout of assemblies and post spacings to avoid conflicts with equipment and equipment operators:
      1) Indicate on the Shop Drawings locations of such equipment.
      2) Highlight locations where railings cannot be made continuous, and obtain the Engineer's directions on how to proceed before fabricating or installing railings.
2. Aluminum handrails and guardrails (nonwelded pipe):
   a. Rails, posts, and fitting-assembly spacers:
      1) In accordance with ASTM B429, 6005, 6063 or 6105, minimum Schedule 40, extruded aluminum pipe of minimum 1.89-inch outside diameter and 0.14-inch wall thickness.
   b. Kick plates: 6061 or 6105 aluminum alloy.
   c. Fastenings and fasteners: As recommended or furnished by the manufacturer.
   d. Other parts: 6063 extruded aluminum, or F214 or F514.0 aluminum castings:
      1) Fabrications: In accordance with ASTM B209 or ASTM B221 extruded bars:
         a) Bases: 6061 or 6063 extruded aluminum alloy.
      2) Plug screws or blind rivets: Type 305 stainless steel.
         a) Other parts: Type 300 series stainless steel.
   e. Finish of aluminum components:
      1) Anodized finish, 0.7 mil thick, applied to exposed surfaces after cutting.
         a) AA DAF-25 Specification M12-C22-A41: Mechanical finish non specular as fabricated, chemical finish-medium matte, anodic coating-clear Class I Architectural.
      2) Pretreat aluminum for cleaning and removing markings before anodizing.

f. Fabrication and assembly:
    1) Fabricate posts in single, unspliced pipe length.
    2) Perform without welding.
    3) Do not epoxy bond the parts.
    4) Maximum clear opening between assembled railing components as indicated on the Drawings.
g. Manufacturers: One of the following or equal:
    1) Craneveyor Corp. Enerco Metals, C-V Rail.
    2) Golden Railings, Riveted System.
    3) Moultrie Manufacturing Co., Wesrail.

3. Guardrail gates:
    a. Supplied by the guardrail manufacturer:
        1) Of same material, quality, and workmanship as specified for guardrail system in which they will be installed.
        2) Of design similar to that of handrail or railing system in which they will be installed.
    b. Components: Gate frame, stainless steel self-closing device, hinges, gate stops, and durable self-locking type latch. Fabricate components in accordance with OSHA minimum strength requirements.
4. Fastenings and fasteners: As recommended or furnished by the guardrail manufacturer for use with this system.

F. Ladders:
1. General:
    a. Type: Safety type in accordance with local, state, and OSHA standards as minimum. Furnish guards for ladder wells.
    b. Size: 18 inches wide between side rails of length, size, shape, detail, and location indicated on the Drawings.
2. Aluminum ladders:
    a. Material: 6063-T5 aluminum alloy.
    b. Rungs:
        1) 1-inch minimum solid square bar with 1/8-inch grooves in top and deeply serrated on all sides.
        2) Capable of withstanding 1,000-pound load without failure.
    c. Side rails: Minimum 4-inch by 1/2-inch flat bars.
    d. Finish of aluminum components:
        1) Anodized finish, 0.7 mil thick, applied to exposed surfaces after cutting.
            a) AA DAF-45 Specification M12-C22-A41: Mechanical finish non specular as fabricated, chemical finish-medium matte, anodic coating-clear Class I Architectural.
        2) Pretreat aluminum for cleaning and removing markings before anodizing.
    e. Fabrication:
        1) Welded construction, of size, shape, location, and details indicated on the Drawings.
        2) For ladders over 20 feet high, furnish standard ladder cages designed in accordance with Cal/OSHA requirements.
        3) For fixed ladders over 24 feet high, provide a fall prevention system designed in accordance with state and OSHA requirements.

f. Fall prevention system: Including, but not limited to, railing, brackets, clamps, 2 sleeves, and 2 belts, in accordance with OSHA safe climbing requirements:
   1) Manufacturers: One of the following or equal:
      a) North Consumer Products, Saf-T-Climb.
      b) Swager Communications, Climbers Buddy System.

G. Manhole frames and covers:
   1. Material: Gray iron castings, in accordance with ASTM A48, Class 30-B.
   2. Type: Heavy-duty traffic type, with combined minimum set weight of 265 pounds.
   3. Machine horizontal and vertical bearing surfaces to fit neatly, with easily removable cover bearing firmly in frame without rocking.
   4. Frame:
      a. Bottom flange type.
      b. Approximately 4-1/2-inches frame height.
      c. Dimensions as indicated on the Drawings.
         1) Minimum inside clear dimension may not be smaller than nominal diameter minus 2 inches.
   5. Cover:
      a. Skid-resistant grid pattern design stamped with name of utility service provided by manhole, such as ELECTRICAL, SEWER, TELEPHONE, or WATER.
      b. Solid type without ventilation holes.
   6. Finish: Unpainted.

H. Metal gratings:
   1. General:
      a. Fabricate grating to cover areas indicated on the Drawings.
      b. Unless otherwise indicated on the Drawings, grating over an opening shall cover entire opening.
      c. Make cutouts in grating where required for equipment access or protrusion, including valve operators or stems, and gate frames.
      d. Band ends of grating and edges of cutouts in grating:
         1) End banding: 1/4 inch less than height of grating, with top of grating and top edge of banding flush.
         2) Cutout banding: Full-height of grating.
         3) Use banding of same material as grating.
         4) Panel layout: Enable installation and subsequent removal of grating around protrusions or piping.
         5) Openings 6 inches and larger: Lay out grating panels with edges of 2 adjacent panels located on centerline of opening.
         6) Openings smaller than 6 inches: Locate opening at edge of single panel.
         7) Where an area requires more than 1 grating section to cover area, clamp adjacent grating sections together at 1/4-points with fasteners acceptable to the Engineer.
         8) Fabricate steel grating sections in units weighing not more than 50 pounds each.

9) Fabricate aluminum grating sections in units of weighing not more than 50 pounds each.
10) Gaps between adjacent grating sections shall not be more than the clear spacing between bearing bars.

e. When requested by the Engineer, test 1 section of each size grating for each span length involved on the job under full load:
1) Furnish a suitable dial gauge for measuring deflections.

f. Grating shall be aluminum, unless otherwise specified or indicated on the Drawings.

2. Aluminum grating:
a. Material for gratings, shelf angles, and rebates: 6061-T6 or 6063-T6 aluminum alloy, except crossbars may be 6063-T5 aluminum alloy.
b. Shelf angle concrete anchors: Type 316L stainless steel.
c. Grating rebate rod anchors: 6061-T6 or 6063-T6 aluminum alloy.
d. Bar size and spacing: As determined by the manufacturer to enable grating to support design load.
e. Design live load: A minimum of 100 pounds per square foot uniform live load on entire grating area, but not less than the live load indicated on the Drawings for the area where grating is located.
f. Maximum fiber stress for design load: 12,000 pounds per square inch.
g. Maximum deflection due to design load: 1/240 of grating clear span.
h. Maximum spacing of main grating bars: 1-1/8 inches clear between bars.
i. Minimum grating height: 1-1/2 inches.
j. Manufacturers: The following or equal:
1) Harsco Industrial IKG, Swaged Aluminum I-Bar with striated finish.

3. Stainless Steel gratings:
a. Bar size and spacing: As determined by the manufacturer to support design load.
b. Design live load: A minimum of 100 pounds per square foot uniform live load on the entire area of the grating area, but not less than the live load indicated on the Drawings for the area where the grating is located.
c. Maximum deflection under design load: 1/240 of grating clear span.
d. Bar spacing: Maximum of 1-1/8 inches clear between bars.
e. Manufacturers: The following or equal:
1) Grating Pacific.

4. Heavy-duty steel grating:
a. Fabricated from structural steel and designed in accordance with AASHTO Standard Specifications for Highway Bridges, using H-20 loading.
b. Hot-dip galvanized after fabrication in accordance with ASTM A123.
c. Manufacturers: One of the following or equal:
1) Reliance Steel Products Co., Heavy-Duty Steel Grating.
2) Seidelhuber Metal Products, Inc., equivalent product.

I. Metal tread plate:
1. Having a raised figured pattern on one surface to provide improved traction.

J. Preformed channel pipe supports:
1. As specified in Section 15062 - Preformed Channel Pipe Support System.

K. Stairs:
   1. Aluminum stairs:
      a. Stringers: 6061-T6 aluminum alloy.
      b. Stair treads:
         1) Aluminum of same type specified under aluminum grating.
         2) Of sizes indicated on the Drawings, and 1-3/4 inch minimum depth with cast abrasive type safety nosings.
      c. Provide a vertical close piece between each riser. Fabricate, install, and fasten close pieces as indicated on the Drawings**.**
      d. Handrails and guardrails: Aluminum pipe specified under the aluminum handrails and guardrails (nonwelded pipe) article.
      e. Fasteners: Type 316L stainless steel.

L. Miscellaneous aluminum:
   1. Fabricate aluminum products, not covered separately in this Section, in accordance with the best practices of the trade and field assemble by riveting or bolting.
   2. Do not weld or flame cut.

M. Miscellaneous cast iron:
   1. Tough, gray iron, free from cracks, holes, swells, and cold shuts.
   2. Quality such that hammer blow will produce indentation on rectangular edge of casting without flaking metal.
   3. Before leaving the foundry, clean castings and apply 16-mil dry film thickness coating of coal-tar epoxy, unless otherwise specified or indicated on the Drawings.

N. Miscellaneous stainless steel:
   1. Provide miscellaneous stainless steel items not specified in this Section as indicated on the Drawings or specified elsewhere.
      a. Fabricate and install in accordance with the best practices of the trade.
   2. Cleaning and passivation:
      a. Following shop fabrication of stainless steel members, clean and passivate fabrications.
      b. Finish requirements: Remove free iron, heat tint oxides, weld scale and other impurities, and obtain a passive finished surface.
      c. Provide quality control testing to verify effectiveness of cleaning agents and procedures and to confirm that finished surfaces are clean and passivated.
         1) Conduct sample runs using test specimens with proposed cleaning agents and procedures as required to avoid adverse effects on surface finishes and base materials.
      d. Pre-clean, chemically descale (pickle), and final clean fabrications in accordance with the requirements of ASTM A380 to remove deposited contaminants before shipping.
         1) Passivation by citric acid treatment is not allowed.
            a) If degreasing is required before cleaning to remove scale or iron oxide, cleaning (pickling) treatments with citric acid are permissible; however, these treatments shall be followed by inorganic cleaners such as nitric-hydrofluoric acid.

2) Provide acid descaling (pickling) in accordance with Table A1.1 of Annex A1 of ASTM A380.
3) After pickling, final cleaning of stainless steel shall be in accordance with Part II of Table A2.1 of Annex A2 of ASTM A380.

e. After cleaning, inspect using methods specified for “gross inspection” in ASTM A380.

f. Improperly or poorly cleaned and passivated materials shall not be shipped and will not be accepted at the job site.

O. Miscellaneous structural steel:

1. Provide miscellaneous structural steel items not specified in this Section as indicated on the Drawings or specified elsewhere.

a. Fabricate and install in accordance with the best practices of the trade.

P. Isolating sleeves and washers:

1. As indicated on the Drawings and as specified in Section 05190 - Mechanical Anchoring and Fastening to Concrete and Masonry.

## PART 3 EXECUTION

### 3.01 EXAMINATION

A. Verification of conditions:

1. Examine work in place to verify that it is satisfactory to receive the Work of this Section.
2. If unsatisfactory conditions exist, do not begin this work until such conditions have been corrected.

### 3.02 INSTALLATION

A. General:

1. Install products as indicated on the Drawings, and in accordance with Shop Drawings and the manufacturer’s printed instructions, as applicable, except where specified otherwise.
2. Interface between materials:

a. Dissimilar metals: Where steel comes in contact with dissimilar metals (aluminum, stainless steel, etc.), separate or isolate the dissimilar metals.

1) Make application so that the isolating or protective barrier is not visible in the completed construction.
2) Isolating sleeves and washers: As specified in Section 05190 - Mechanical Anchoring and Fastening to Concrete and Masonry.

b. Aluminum in contact with concrete or masonry: Coat aluminum surfaces as specified in Section 09960 - High Performance Coatings.

c. Aluminum in contact with concrete or masonry.

B. Aluminum stair nosing:

1. Install on treads of concrete stairs, including top tread on upper concrete slab.
2. Omit where concrete is submerged.
3. Cast in fresh concrete, flush with tread and riser faces. Install nosing in center of step.

C. Cast iron stop plank grooves:
   1. Recess stop plank grooves with cast iron surfaces of groove set flush with concrete surface.

D. Handrails and guardrails:
   1. General:
      a. Fasten pipe rails to fittings with Series 300 stainless steel pop rivets or flush set screws.
      b. Make pipe cuts clean and straight, free of burrs and nicks, and square and accurate for minimum joint-gap.
      c. Drill and countersink holes to proper size, as required for a tight flush fit of screws and other component parts.
      d. Space attachment brackets as indicated in the manufacturer's instructions.
   2. Aluminum pipe handrails and guardrails:
      a. During construction, keep exterior surfaces of handrails and guardrails covered with minimum 0.4 millimeters of heat shrink polyethylene film.
      b. Do not remove protective film before handrails and guardrails have been accepted by the Engineer or before other work in proximity of handrails and guardrails has been completed.
      c. Discontinue handrails and guardrails at lighting fixtures.
      d. Provide 1/8-inch diameter weep hole at base of each post.
      e. Space posts as indicated on the Drawings.
      f. Anchor posts into concrete by grouting posts into formed holes in concrete, into stainless steel sleeves cast in concrete; or bracket mount to face of concrete surfaces as specified and indicated on the Drawings.
      g. Space rails as indicated on the Drawings.
      h. Make adequate provision for expansion and contraction of kick plates and rails.
         1) Make provisions for removable sections where indicated on the Drawings.
      i. Make lower rails a single, unspliced length between posts, or continuous.
      j. Make top rails continuous whenever possible, and attach single, unspliced lengths to 3 posts minimum.
      k. Draw up fasteners tight with hand wrench or screw driver.
      l. Space attachment brackets as indicated on the Drawings or in the manufacturer's installation instructions.
      m. Completed installation shall have handrails and railings rigid and free of play at joints and attachments.
      n. Protect handrail and guardrail finish from scratches, gouges, dents, stains, and other damage.
      o. Replace damaged or disfigured handrails and guardrails with new.
      p. Shortly before final acceptance of the Work, and after removal of protective polyethylene film, clean handrails and guardrails with mild detergent or with soap and water.
         1) After cleaning, thoroughly rinse handrails and guardrails and wipe with soft cloth.
      q. Erect guardrail straight, level, plumb, and true to the positions as indicated on the Drawings. Correct deviations from true line of grade, which are visible to the eye.

3. Guardrail gates:
    a. Install gate to be a vertical plane with the guardrail when in the closed position.
    b. Install hinges so that each gate can swing 180 degrees from the closed position to the fully open position.
    c. Install so that the gates swing to the walkway side of the guardrail only.
        1) Install gate stops on the stationary railing posts to prohibit gates from swinging in the wrong direction.
    d. Install gate frames, hinges, stops, and latches in accordance with OSHA minimum strength requirements.

E. Ladders:
1. Secure to supporting surface with bent plate clips providing minimum 8 inches between supporting surface and center of rungs.
2. Where exit from ladder is forward over top rung, extend side rails 3 feet-3 inches minimum above landing, and return the rails with a radius bend to the landing.
3. Where exit from ladder is to side, extend ladder 5 feet-6 inches minimum above landing and rigidly secure at top.
4. Erect rail straight, level, plumb, and true to position indicated on the Drawings:
    a. Correct deviations from true line or grade which are visible to the eye.

F. Manhole frames and covers:
1. Installation: As recommended by the manufacturer.

G. Metal gratings:
1. General:
    a. Allow 1/8-inch maximum clearance between ends of grating and inside face of vertical leg of shelf angles.
    b. Horizontal bearing leg of shelf angles shall be 2 inches minimum.
    c. Install aluminum plate or angles where necessary to fill openings at changes in elevation and at openings between equipment and grating.
    d. Install angle stops at ends of grating.
    e. Installed grating shall not slide out of rebate or off support.
    f. Weld stops in place, unless otherwise specified or indicated on the Drawings.
    g. Top surfaces of grating sections adjacent to each other shall lie in same plane.
2. Aluminum grating:
    a. Support on aluminum shelf angles or rebates.
3. Heavy-duty steel grating:
    a. Support on hot-dip galvanized structural steel rebates embedded and anchored in concrete.
    b. Use for roadways, traffic areas, and where indicated on the Drawings.

H. Stairs:
1. Install guard railings around stair wells as indicated on the Drawings or specified.

I. Stainless steel:
   1. Welding:
      a. Passivate field-welded surfaces:
         1) Provide cleaning, pickling and passivating as specified in this Section.
         2) Clean using Derustit stainless steel cleaner, or equal.

END OF SECTION

# SECTION 09960

# HIGH-PERFORMANCE COATINGS

## PART 1 GENERAL

### 1.01 SUMMARY

A. Section includes:
   1. Coatings, including coating systems, surface preparation, application requirements, and quality control requirements.

### 1.02 REFERENCES

A. Abbreviations:
   1. CMU - Concrete masonry units.
   2. CSA - Coating system applicator. Specialty subcontractor retained by the Contractor to install the coating systems specified in this Section.
   3. CSM - Coating system manufacturer.
   4. CTR - Coating system manufacturer's technical representative.
   5. DFT - Dry-film thickness. Thickness of cured film, usually expressed in mils (0.001 inch).
   6. VOC - Volatile organic compound. Portion of the coating that is a compound of carbon, is photochemically reactive, and evaporates during drying or curing; expressed in grams per liter (g/l) or pounds per gallon (lb/gal). VOC is determined by EPA Method 24.
   7. WFT - Wet film thickness. Coating thickness as measured immediately after application. Usually expressed in mils (0.001 inch).

B. Standards:
   1. ASTM International (ASTM):
      a. D16 - Standard Terminology for Paint, Related Coatings, Materials, and Applications.
      b. D2200 - Standard Practice for Use of Pictorial Surface Preparation Standards and Guides for Painting Steel Surfaces.
      c. D3359 - Standard Test Methods for Rating Adhesion by Tape Test.
      d. D3960 - Standard Practice for Determining Volatile Organic Compound (VOC) Content of Paints and Related Coatings.
      e. D4262 - Standard Test Method for pH of Chemically Cleaned or Etched Concrete Surfaces.
      f. D4263 - Standard Test Method for Indicating Moisture in Concrete by the Plastic Sheet Method.
      g. D4285 - Standard Test Method for Indicating Oil or Water in Compressed Air.
      h. D4414 - Standard Practice for Measurement of Wet Film Thickness by Notch Gages.
      i. D4417 - Standard Test Methods for Field Measurement of Surface Profile of Blast-Cleaned Steel.

j. D4541 - Standard Test Methods for Pull-Off Strength of Coatings Using Portable Adhesion Testers.
k. D4787 - Standard Practice for Continuity Verification of Liquid or Sheet Linings Applied to Concrete Substrates.
l. D5162 - Standard Practice for Discontinuity (Holiday) Testing of Nonconductive Protective Coating on Metallic Substrates.
m. D7234 - Standard Test Method for Pull-Off Adhesion Strength of Coatings on Concrete Using Portable Pull-Off Adhesion Testers.
n. E337 - Standard Test Method for Measuring Humidity with a Psychrometer (the Measurement of Wet- and Dry-Bulb Temperatures).
o. F1869 - Standard Test Method for Measuring Moisture Vapor Emission Rate of Concrete Subfloor Using Anhydrous Calcium Chloride.
p. F2170 - Standard Test Method for Determining Relative Humidity in Concrete Floor Slabs Using In-situ Probes.

2. International Concrete Repair Institute (ICRI):
   a. 310.2 - Guideline for Selecting and Specifying Concrete Surface Preparation for Sealers, Coatings, Polymer Overlays, and Concrete Repair.
3. NACE International (NACE):
   a. SP0178 - Design, Fabrication, and Surface Finish Practices for Tanks and Vessels to Be Lined for Immersion Service.
   b. SP0188 - Discontinuity (Holiday) Testing of New Protective Coatings on Conductive Substrates.
4. National Association of Pipe Fabricators (NAPF):
   a. 500-03 - Surface Preparation Standard for Ductile Iron Pipe and Fittings in Exposed Locations Receiving Special External Coatings and/or Special Internal Linings.
5. NSF International (NSF):
   a. 61 - Drinking Water System Components - Health Effects.
6. Occupational Safety and Health Administration (OSHA).
7. Society of Protective Coatings (SSPC):
   a. Glossary - SSPC Protective Coatings Glossary.
   b. Guide 6 - Guide for Containing Surface Preparation Debris Generated during Paint Removal Operations.
   c. PA 1 - Shop, Field, and Maintenance Painting of Steel.
   d. PA 2 - Procedure for Determining Conformance to Dry Coating Thickness Requirements.
   e. PA 9 - Measurement of Dry Coating Thickness Using Ultrasonic Gages.
   f. QP 1 - Standard Procedure for Evaluating the Qualifications of Industrial/Marine Painting Contractors.
   g. SP 1 - Solvent Cleaning.
   h. SP 3 - Power Tool Cleaning.
   i. SP 5 - White Metal Blast Cleaning.
   j. SP 10 - Near-White Metal Blast Cleaning.
   k. SP 11 - Power Tools Cleaning to Bare Metal.
   l. SP 13 - Surface Preparation of Concrete.
   m. SP 16 - Brush-Off Blast Cleaning of Coated and Uncoated Galvanized Steel, Stainless Steels, and Non-Ferrous Metals.
   n. SP COM - Surface Preparation Commentary.
   o. SP VIS 1 - Guide and Reference Photographs for Steel Surfaces Prepared by Dry Abrasive Blast Cleaning.
   p. SP WJ-1 - Waterjet Cleaning of Metals—Clean to Bare Substrate.

q. SP WJ-2 - Waterjet Cleaning of Metals—Very Thorough Cleaning.
r. SP WJ-3 - Waterjet Cleaning of Metals—Thorough Cleaning.
s. SP WJ-4 - Waterjet Cleaning of Metals—Light Cleaning.

## 1.03 TERMINOLOGY

A. Definitions used in this Section are in accordance with definitions referenced in ASTM D16, ASTM D3960, and SSPC Glossary of Definitions.

B. The words and terms listed below are not defined terms that require initial capital letters, but, when used in this Section, have the indicated meaning:
1. Abrasive: Material used for blast cleaning, such as sand, grit, or shot.
2. Abrasive Blast Cleaning: Cleaning/surface preparation by abrasive propelled at high speed.
3. Anchor Pattern: Profile or texture of prepared surface(s).
4. Biogenic Sulfide Corrosion: Corrosion caused by sulfuric acid formed when *Thiobacillus* bacteria metabolizes hydrogen sulfide.
5. Bug Holes: Small cavities resulting when air bubbles are entrapped in the surface of formed concrete during placement and consolidation.
6. Coating/Paint/Lining Thickness: Total thickness of primer, intermediate, and/or finish coats after drying or curing.
7. Dew point: Temperature a given air/water vapor mixture starts to condense.
8. Dry to Recoat: Time interval between material application and its ability to receive the next coat.
9. Dry to Touch: Time interval between material application and its ability to tolerate a light touch without coating damage.
10. Drying Time: Time interval between application and material curing.
11. Exposed Surface: Any indoor or outdoor surface not buried or encased.
12. Feather Edging: Reducing coating thickness at its edge to blend with existing surrounding coating.
13. Feathering: Tapering off a wet edge with a comparatively dry brush.
14. Ferrous: Cast iron, ductile iron, wrought iron, and all steel alloys except stainless steel.
15. Field Coat: Application of a surface coating system at the work site.
16. Finish Coat: Final coat in a paint system, including texture, color, smoothness of surface, and other properties affecting appearance.
17. Hold Point: A defined point, specified in this Section, at which work shall be halted for inspection.
18. Holiday: A discontinuity, skip, void, or pinhole in coating or coating system film that exposes the substrate.
19. Honeycomb: Segregated and porous surface of hardened concrete due to insufficient consolidation.
20. Hydroblast: High or ultra-high-pressure water jet surface preparation.
21. Immersed/Immersion: A service condition in which substrate is submerged, is immediately above liquids, or is subject to frequent wetting, splashing, or washdown.
22. Incompatibility: One coating’s inability to overlay another coating or surface as evidenced by bleeding, poor bonding, or lifting of old coating; inability of a coating to bond to a substrate.
23. Laitance: A thin, weak, brittle layer of cement and aggregate fines on a concrete surface.

24. Mil: 0.001 inch.
25. Overspray: Dry spray, particularly paint bonded to an unintended surface.
26. Pinhole: A small diameter discontinuity in a coating or coating system film, created by offgassing from a void in a concrete or masonry substrate causing a void between coats or exposing the substrate. Usually caused by coating application while temperature is rising.
27. Pot Life: Time interval after components are mixed and coating can be satisfactorily applied.
28. Prime Coat: First full paint coat applied to a surface when using a multicoat system. Primers adhere to a new substrate, protect the substrate, and promote adhesion of subsequent coats of paint. The prime coat on metal surfaces is the first full coat and does not include solvent wash, grease emulsifiers, or other pretreatment applications.
29. Resurfacer/Resurfacing Material: A layer of cementitious and/or resin-based material used to fill or otherwise restore surface continuity to worn or damaged concrete surfaces.
30. Shelf Life: Maximum storage time a material may be stored without losing its usefulness.
31. Shop Coat: 1 or more coats applied in an off-site shop or plant before shipment to work site where field or finishing coat(s) are applied.
32. Spreading Rate: Area covered by a unit volume of paint at a specific thickness.
33. Stripe Coat: A separate brush coat of paint applied to all weld seams, pits, nuts/bolts/washers, and edges. This coat shall not be applied until previous coats have cured. Once applied, the coat shall be allowed to cure before subsequent coats are applied.
34. System: Protective film with 1 or more coats applied in a predetermined order, including surface preparation and quality control requirements.
35. Thick Film Coating System: A coating system applied with a minimum dry film thickness of 25 mils.
36. Tie Coat: An intermediate coat that bonds different types of paint material, improving succeeding coat adhesion.
37. Touch-Up Painting: Application of paint on previously painted surfaces to repair marks, scratches, and deteriorated or damaged areas to restore the appearance and performance of the coating.
38. Water Blast: An alternative to air abrasive blast cleaning that can be used with or without abrasive injection. Water cleaning at pressures up to 5,000 pounds per square inch is called low-pressure water cleaning or power washing. High-pressure water cleaning uses water pressures between 5,000 and 10,000 pounds per square inch. Water jetting is water blasting with added abrasive at pressures between 10,000 and 25,000 pounds per square inch. Ultra-high-pressure water jetting is water blasting at pressures above 25,000 pounds per square inch.
39. Weld Splatter: Beads of non-structural weld metal that adhere to the surrounding surface, removed as part of surface preparation.

## 1.04 SUBMITTALS

A. Submit the following:
   1. Schedule of proposed coating materials.
   2. Schedule of surfaces to be coated with each coating material.

3. Product data:
    a. Physical properties of coatings, including the following:
        1) Solids content.
        2) Ingredient analysis.
        3) VOC content.
        4) Temperature resistance.
        5) Typical exposures and limitations.
        6) Manufacturer's standard color chips.
    b. Compliance with regulatory requirements:
        1) VOC limitations.
        2) Lead compounds and polychlorinated biphenyls.
        3) Abrasives and abrasive blast cleaning techniques and disposal.
        4) Methods for tenting blasting areas and methods to protect existing equipment from dust and debris.
        5) NSF certification of coatings for potable water supply systems.
    c. CSM's current printed recommendations and product datasheets for coating systems, including:
        1) Surface preparation recommendations.
        2) Primer type.
        3) Maximum dry and wet-mil thickness per coat and number of coats.
            a) Coating coverage worksheets.
        4) Minimum and maximum curing time between coats, including atmospheric conditions for each.
        5) Curing time before submergence in liquid.
        6) Thinner to be used for each coating.
        7) Ventilation requirements.
        8) Minimum and maximum atmospheric conditions during which the paint shall be applied.
        9) Allowable application methods.
        10) Maximum allowable substrate moisture content.
        11) Maximum shelf life.
        12) Requirements for transportation and storage.
        13) Mixing instructions.
        14) Shelf life.
        15) Material Pot life.
        16) Precautions for applications free of defects.
        17) Method of application.
        18) Drying time of each coat, including prime coat.
        19) Compatible prime coats.
        20) Limits of ambient conditions during and after application.
        21) Required protection from sun, wind, and other conditions.
        22) Touch-up requirements and limitations.
        23) Minimum adhesion of each system submitted in accordance with ASTM D4541 and ASTM D7234.
    d. Samples: Include 8-inch square drawdowns or brushouts of topcoat finish when requested. Identify each sample as to finish, formula, color name and number, sheen name, and gloss units.
    e. Affidavits signed by an officer of the CSM’s corporation attesting to full compliance of each coating system component with current federal, state, and local air pollution control regulations and requirements.

f. List of cleaning and thinner solutions allowed by the CSMs.
g. Storage requirements, including temperature, humidity, and ventilation for Coating System Materials as recommended by the CSMs.

## 1.05 QUALITY ASSURANCE

A. Regulatory requirements: Comply with governing agencies' regulations by using coatings in accordance with to their VOC limits:
   1. Lead-based coatings are not permitted.
   2. Do not use coal-tar epoxy in contact with drinking water or exposed to ultraviolet radiation.

B. Certification:
   1. Product data shall designate coating as being suitable for wastewater service.

C. Obtain approval before coating other surfaces. Use products by same manufacturer for prime coats, intermediate coats, and finish coats on same surface, unless specified otherwise.

D. Quality control requirements:
   1. Contractor shall be responsible for the workmanship and quality of the coating system installation:
      a. Inspections by Owner or Engineer will not relieve or limit Contractor's responsibilities.
   2. In accordance with this specification's requirements and the standards referenced in this Section. Changes in the coating system application requirements will be allowed only with the Engineer's written acceptance.
   3. Specially trained crews with experience applying the specified coating system coating are required for:
      a. Coating application using plural component spray equipment or other specialty equipment.
      b. Coating with specialty linings for severe service conditions, including floor coatings, and with linings for corrosive headspaces or secondary containment areas.
   4. Do not use contaminated, outdated, diluted materials, and/or materials from previously opened containers.
   5. Identify inspection access points used by Owner's or Engineer's personnel.
   6. Provide ventilation, ingress, egress, or other means as necessary for Owner's or Engineer's personnel to safely access the work areas.
   7. Conduct and continually inspect work so the coating system is installed as specified:
      a. Confirm that compressed air used for surface preparation or blow-down cleaning is free of oil and moisture.
      b. Monitor surface preparation daily at shift's beginning and end and at intervals not to exceed 4 hours during the shift.
      c. Monitoring coatings application: Continuously inspect, measure, and record the wet film thickness and general film quality (visual inspection) for runs, sags, pinholes, holidays, etc., during coating:

d. Post cure evaluation: Measure and inspect the overall dry film thickness on all surfaces:
   1) Conduct a DFT survey and perform adhesion testing, holiday detection, or cure testing as required in this Section and/or the CSM's written instructions.
   2) Perform applicable tests in accordance with ASTM D4541, ASTM D4787, ASTM D5162, ASTM D7234, SSPC-PA 1, SSPC-PA 2, SSPC-PA 9, and other pertinent standards and recommended practices.

## 1.06 DELIVERY, STORAGE, AND HANDLING

A. Deliver, store, and handle products as specified in Division 01.

B. Immediately remove unspecified and unapproved coatings from Project site.

C. Deliver new labeled, unopened containers:
   1. Do not deliver materials after manufacturer's expiration date or over 12 months from manufacturing date, whichever is more stringent. Store materials in well-ventilated enclosed structures and protect from weather and excessive heat or cold in accordance with the CSM's recommendations:
      a. Store flammable materials in accordance with federal, state, and local requirements.
      b. Store rags and cleanup materials appropriately to prevent fire and spontaneous combustion.
   2. Store and dispose of hazardous waste in accordance with federal, state, and local requirements. This requirement specifically applies to waste solvents and coatings.
   3. Container labels shall show the following:
      a. Brand name or product title.
      b. CSM's batch number.
      c. CSM's manufacture date.
      d. CSM's name.
      e. Generic material type.
      f. Application and mixing instructions.
      g. Hazardous material identification label.
      h. Shelf life expiration date.
      i. Color.
      j. Mixing and reducing instructions.
   4. Clearly mark containers to indicate safety hazards associated with the use of or exposure to materials.

## 1.07 PROJECT CONDITIONS

A. Apply coatings to dry surfaces:
   1. Surface moisture: Comply with manufacturer's requirements or as specified in this Section:
      a. Plaster and gypsum wallboard: 12 percent.
      b. Masonry and concrete block: 12 percent.
      c. Interior located wood: 15 percent.

d. Concrete floors: Moisture vapor transmission rate of no more than 3.0 pounds per 1,000 square feet per 24 hours in accordance with ASTM F1869 or relative humidity no greater than 80 percent if tested in accordance with ASTM F2170 unless the CSM's recommendations are more restrictive.
e. Concrete structures: Negative results from Plastic Sheet Test in accordance with ASTM D4263, and maximum of 80 percent relative humidity in accordance with ASTM F2170.

B. Do not apply coatings when the following conditions exist. If such conditions exist, provide containment, covers, environmental controls, and other necessary measures:
1. During rainy, misty, or damp weather, or to surfaces with frost or condensation.
2. When the surface temperature is below 10 degrees Fahrenheit above the dew point.
3. When ambient or surface temperature:
a. Is less than 55 degrees Fahrenheit unless manufacturer allows a lower temperature.
b. Is less than 65 degrees Fahrenheit for clear finishes unless manufacturer allows a lower temperature.
c. Exceeds 90 degrees Fahrenheit unless manufacturer allows a higher temperature.
d. Exceeds manufacturer's recommendation.
4. When relative humidity is higher than 85 percent.
5. Under dusty or adverse environmental conditions.
6. When light on surfaces measures less than 15 foot-candles.
7. When wind speed exceeds 15 miles per hour.

C. Apply coating only under evaporation conditions rather than condensation:
1. Use dehumidification equipment, fans, and/or heaters inside enclosed areas to maintain required atmospheric and surface temperature requirements for proper coating application and cure.
2. Measure and record relative humidity and air and surface temperatures at the start and end of each shift to confirm proper humidity and temperature levels inside the work area:
a. Submit test results.

D. Continuously ventilate, dehumidify, and heat enclosed spaces with high humidity during surface preparation, coating application, and curing:
1. Maintain minimum air temperature of 55 degrees Fahrenheit and 10 degrees Fahrenheit above the dew point.
2. Maintain dew point of at least 10 degrees Fahrenheit less than the temperature of the coldest part of the structure where work is performed.
3. Reduce dew point temperature in conditioned space by at least 10 degrees Fahrenheit within 20 minutes.
4. Seal work areas and maintain positive pressure per dehumidification equipment supplier's recommendations.
5. Maintain these conditions before, during, and after application to ensure proper adhesion and cure of coatings for no less than:
a. Entire curing period.
b. 8 hours after coating.

E. Systems:
   1. Site electrical power availability as specified in Division 01.
   2. Internal combustion engine generators may be used:
      a. Obtain required permits and provide air pollution and noise control devices on equipment as required by permitting agencies require.
      b. Comply with state, federal, and local fire and explosion protection measures when locating and operating generator.
      c. Locate engine generator outside hazardous classified areas in accordance with NFPA 820.
      d. Provide daily fuel service for generator for duration of use.
   3. Dehumidification:
      a. Provide desiccant or refrigeration drying.
      b. Use only desiccant types with a rotary desiccant wheel capable of continuous operation.
      c. Liquid, granular, or loose lithium chloride drying systems are not acceptable.
   4. Heating:
      a. Use electric, indirect combustion, or steam coil.
      b. Direct-fired combustion heaters are not acceptable heat sources during abrasive blasting, coating application, or coating cure.
   5. Filters:
      a. Use a filtration system for dust removal designed to not interfere with dehumidification equipment's ability to control dew point and relative humidity inside the reservoir.
      b. Do not allow air from the working area or dust filtration equipment to recirculate through thein dehumidifier during coating application or when solvent vapors are present.
   6. Design and Submittals:
      a. Prepare and submit dehumidification and heating plan, including all equipment and operating procedures.
      b. Suppliers of services and equipment shall have at least 3 years of experience in similar applications.

F. Provide containment and ventilation system components in accordance with SSPC-Guide 6, Level 3 and as required for hazardous materials.

## 1.08 MAINTENANCE

A. Provide table of products applied organized by surface type. List coating manufacturer, color, color formulation, distributor name, telephone number, and address.

## PART 2 PRODUCTS

### 2.01 DESIGN AND PERFORMANCE CRITERIA

A. Coating materials shall be formulated for environments encountered in water and wastewater treatment processes.

B. Coating materials that come in contact with water distributed as potable water shall be certified in accordance with NSF 61.

### 2.02 COATING SYSTEMS IDENTIFICATION

A. Naming conventions: Coating Systems Identifications contain the elements defined in Table 1.

| Table 1. Coating System Identification Elements | | | | | | |
|---|---|---|---|---|---|---|
| **First Element** | **-** | **Second Element** | **-** | **Third Element** | **-** | **Fourth Element (optional)** |
| 3 or 4 alpha characters | | 1-3 alpha characters | | 1 number | | 3 or 4 alpha characters |
| Coating Type | | Substrate | | System Number | | Additional Substrate or Special Condition |
| Example: EPX | - | C | - | 6 | - | BSC |

1. First element identifies the coating type using the following abbreviations:
   a. ACR: Acrylic.
   b. CTE: Coal tar epoxy.
   c. ELA: Elastomeric acrylic.
   d. EPU: Epoxy-polyurethane.
   e. EPX: Epoxy.
   f. POL: Polyurethane.
   g. SIL: Silicone.
   h. SILX: Siloxane or silane.
   i. VE: Vinyl ester.
2. Second element identifies the substrate using the following abbreviations:
   a. C: Concrete or masonry.
   b. F: Concrete flooring.
   c. FRP: Fiber-reinforced plastic.
   d. GM: Galvanized metal.
   e. M: Metal.
   f. PVC: Polyvinyl chloride, chlorinated polyvinyl chloride.
3. Third element identifies the sequential system number:
   a. For example, EPX-C-2 is the second standard epoxy coating system for concrete substrates.
4. Fourth element is optional and identifies the additional substrate or special condition with the following abbreviations:
   a. PWS: Potable water service applications (NSF-61 approved).
   b. BSC: Biogenic sulfide corrosion-resistant applications in wastewater.
   c. BG: Below grade or buried.
   d. OZ: Organic zinc primer, epoxy polyurethane system.
   e. SC: Secondary containment.

## 2.03 PRODUCTS FOR COATING SYSTEMS

A. Products: As specified in Attachment B - Coating Detail Sheets.

B. Cleaning solvents:
   1. Requirements for solvent wash, solvent wipe, or cleaner used, including, but not limited to, those used for surface preparation in accordance with SSPC-SP 1:
      a. Emulsifying type.
      b. Containing no phosphates.
      c. Biodegradable.
      d. Does not damage zinc.
      e. Compatible with the specified primer.
      f. Complying with applicable air-quality control board requirements.
   2. Use clean white cloths and clean fluids in solvent cleaning.

# PART 3 EXECUTION

## 3.01 GENERAL PROTECTION REQUIREMENTS

A. Protect adjacent coated surfaces from coatings and damage associated with coating work. Repair damage resulting from inadequate or unsuitable protection.

B. Use drop cloths and other coverings to protect adjacent surfaces not to be coated against spatter and droppings.

C. Mask off surfaces of items not to be coated or remove items from area.

D. Furnish and deploy sufficient drop cloths, shields, and protective equipment to prevent spray or droppings from fouling surfaces not being coated and, in particular, surfaces within storage and preparation areas.

E. Place coating waste, cloths, and material that may pose a fire hazard in closed metal containers and remove daily from site.

F. Remove electrical plates, surface hardware, fittings, and fasteners before coating application:
   1. Carefully store, clean, and replace items after completing coating in each area.
   2. Do not use solvent or degreasers to clean hardware that may remove permanent lacquer finishes.

G. Erect and maintain protective enclosures in accordance with SSPC-Guide 6.

H. Protect the following surfaces from abrasive blasting by masking or by other means:
   1. Threaded portions of valve and gate stems, grease fittings, and identification plates.
   2. Machined surfaces for sliding contact.
   3. Surfaces to be assembled against gaskets.
   4. Surfaces of shafting where sprockets will be fit.
   5. Surfaces of shafting where bearings will be fit.

6. Machined bronze surfaces, including slide gates.
7. Cadmium-plated items, except cadmium-plated, zinc-plated, or sherardized fasteners used to assemble equipment requiring abrasive blasting.
8. Galvanized items, unless scheduled to be coated.

I. Protect installed equipment, mechanical drives, and adjacent coated equipment from abrasive blasting to prevent damage caused by spent abrasive blast media, dust, or dirt entering such equipment.

J. Schedule cleaning and coating to keep dust and spray from the cleaning process from falling on wet, newly coated surfaces:
1. Whenever possible, coordinate with other trades and complete surface preparation and coating work before installing hardware, hardware accessories, nameplates, data tags, electrical fixtures, and similar uncoated items that will be in contact with coated surfaces. Mask machined surfaces, sprinkler heads, and other small items that will not be coated.
2. After completing coating, reinstall removed items.
3. Disconnect and move equipment adjacent to walls to clean and coat equipment and walls. Replace and reconnect equipment after coating.

## 3.02 GENERAL SURFACE PREPARATION REQUIREMENTS

A. Prepare surfaces in accordance with CSM's instructions unless more stringent requirements are specified in this Section.

B. Coating detail sheets in Attachment B - Coating Detail Sheets include additional surface preparation requirements.

C. Follow more stringent requirement if information conflicts.

## 3.03 MECHANICAL AND ELECTRICAL EQUIPMENT PREPARATION

A. Identify equipment, ducting, piping, and conduit as specified in Section 15050 - Common Work Results for Mechanical Equipment, Section 15076 - Pipe Identification, and Section 16075 - Electrical Identification.

B. Remove grilles, covers, and access panels for mechanical and electrical system and coat separately.

C. Prepare and finish coat equipment primed by the manufacturer using specified intermediate and top coats, as applicable, and color selected by the Owner.

D. Prepare, prime, and coat both insulated and bare pipes, conduits, boxes, insulated and bare ducts, hangers, brackets, collars, and supports, except where items are covered with material not requiring coating, or with a prefinished coating.

E. Replace identification markings on mechanical or electrical equipment when coated over or spattered.

F. Prepare and coat exposed conduit and appurtenances occurring in finished areas with color and texture to match adjacent surfaces.

G. Prepare and coat sides' front, back, and edges of plywood backboards for electrical equipment before installing backboards and mounting equipment on them.

H. Color code equipment, piping, conduit, and exposed ductwork and apply color banding and identification, such as flow arrows, naming, and numbering, in accordance with the Contract Documents.

## 3.04 CLEANING OF NEW AND PREVIOUSLY COATED OR NEW SURFACES

A. Utilize cleaning agent to remove soluble salts, such as chlorides, from concrete and metal surfaces:
   1. Cleaning agent: Biodegradable non-flammable and containing no VOC.
   2. Manufacturers: The following or equal:
      a. CHLOR*RID International, Inc.:
         1) Complete soluble salt removal with steam or warm water cleaning.
   3. Test cleaned surfaces to ensure removal of soluble salts. Carry out additional cleaning as needed.
   4. Complete final surface preparation before applying new coating system in strict accordance with CSM's printed instructions.

## 3.05 BLAST CLEANING

A. Surface preparation requirements:
   1. Do not reuse spent blast abrasive.
   2. Ensure that filter compressed air used for blast cleaning is free of condensed water and oil:
      a. Clean moisture traps at least once every 4 hours or more frequently, as required, to prevent moisture from entering the abrasive blasting equipment air supply.
      b. Check blast air for moisture and oil after each cleaning in accordance with ASTM D4285.
   3. Install oil separators just downstream of compressor discharge valves and at the discharge point of blast pot discharges. Check separators on the same frequency as the moisture traps.
   4. Keep regulators, gauges, filters, and separators on compressor air lines to blasting nozzles operational at all times.
   5. Install an air dryer or desiccant filter drying unit to dry the compressed air before blast pot connections. Use and maintain the dryer throughout surface preparation work.
   6. Use a venturi-type, or other high velocity-type, abrasive blast nozzles supplied with at least 100 pounds per square inch gauge air pressure at the nozzle and enough volume to obtain appropriate blast cleaning production rates and surface cleanliness.
   7. Provide airborne particulate evacuation and filtering that meets OSHA safety standards. Maintain optimal visibility both to clean and provide the specified surface profile and to allow inspection of the substrate during surface preparation work.
   8. If prepared and cleaned metallic substrates become contaminated between final surface preparation work and coating system application, or if the prepared substrate darkens or changes color, re-clean by water blasting, or

abrasive blast cleaning as appropriate until the specified degree of cleanliness is restored.

B. Water jetting or water blasting:
   1. Use water jetting or water blasting for recoating or relining where an adequate surface profile exists.
   2. Perform water jetting or water blasting in accordance with SSPC-SP 13 and SSPC-WJ-1, WJ-2, WJ-3, WJ-4.

## 3.06 GENERAL PREPARATION REQUIREMENTS FOR METALLIC SURFACES

A. Remove rust, scale, and welding slag and spatter:
   1. Remove and grind smooth excessive weld material and weld spatter on metal surfaces before blast cleaning in accordance with NACE SP0178, Appendix C, Level C.
   2. Grind sharp edges on metal substrate to approximately 1/16-inch radius before abrasive blast cleaning.

B. Prepare metallic surfaces in accordance with applicable portions of surface preparation specifications of the SSPC specified for each coating system:
   1. Remove grease and oil in accordance with SSPC-SP 1.
   2. Use solvent as recommended by the CSM.
   3. Measure profile depth of the surface to be coated in accordance with Method C of ASTM D4417. Select blast particle size and gradation to produce the specified surface profile.
   4. Constantly monitor and maintain ambient environmental conditions to ensure cleanliness and that no “rust back” occurs before coating material application.

C. Prepare metallic surfaces by blast cleaning in accordance with SSPC-VIS 1 (ASTM D2200). Prepare abrasive blast representative areas for the Owner's representative to inspect on the first day of cleaning.

D. Unless otherwise specified, the requirements for blast cleaning steel, ductile iron, and stainless steel substrates are as follows:
   1. Ferrous metal surfaces not to be submerged: Abrasive blast in accordance with SSPC-SP 10 unless blasting may damage adjacent surfaces, is prohibited, or is specified otherwise. Where abrasive blasting is not possible, clean surfaces to bare metal with power tools in accordance with SSPC-SP 11.
   2. Ferrous metal surfaces to be submerged: Abrasive blast in accordance with SSPC-SP 5, unless specified otherwise, to clean and provide roughened surface profile with a depth between 2 and 4 mils.
   3. Remove traces of grit, dust, dirt, rust scale, friable material, loose corrosion products, or embedded abrasive from substrate before coating application.
   4. When abrasive blasted surfaces rust or discolor before coating, abrasive blast clean surfaces again.

E. Field preparation of shop-primed surfaces:
   1. Smooth welds and prominences with power tools before applying field-applied coatings.
   2. Clean and dry shop-primed ferrous metal surfaces and fabricated assemblies before applying field coats.

3. Prepare shop epoxy primed surfaces with light abrasive blasting or abrading and then vacuum before applying finish coats:
    a. Follow CSM instructions for surface preparation when the primer recoat limit has been exceeded.
4. Non-immersion service: Clean in accordance with SSPC-SP 2 (Hand Tool Cleaning) or SSPC-SP 3 (Power Tool Cleaning) and uniformly roughen.
5. Immersion, BSC, and SC service: Remove shop primer in accordance with SSPC-SP 5 (Near-White Blast Cleaning).

F. Damaged shop primer or rust bleeding:
1. Ferrous metals: Clean in accordance with SSPC-SP 1 (Solvent Cleaning) and spot blast in accordance with SSPC-SP 10 (Near-White Metal Blast Cleaning) to achieve a uniform surface profile between 2.0 and 2.5 mils before recoating.
2. Reject galvanized steel with rust bleeding.

G. Damaged coating: Repair by abrasive blast cleaning surfaces as specified for the coating system; feather to a smooth transition before touching up.

## 3.07 PREPARATION REQUIREMENTS BY SURFACE TYPE

A. Galvanized steel and non-ferrous metal surfaces:
1. Degrease or solvent clean (SSPC-SP 1) to remove oily residue.
2. Abrasive blast clean in accordance with SSPC-SP 16:
    a. If abrasive blast cannot be performed, abrade in accordance with SSPC-SP 3 (Power Tool Cleaning).
3. Apply metal pretreatment within 24 hours before coating galvanized surfaces that cannot be thoroughly abraded, such as bolts, nuts, or preformed channels.
4. Test surface for contaminants using copper sulfate solution.

B. Stainless-steel surfaces:
1. Abrasive blast clean in accordance with SSPC-SP 16 to leave a clean, uniform appearance with surface profile between 1.5 and 2.5 mils.

C. Ductile iron pipe and fittings to be lined or coated: Abrasive blast clean in accordance with NAPF 500-03.

D. Sherardized, aluminum, copper, and bronze surfaces:
1. Abrasive blast clean in accordance with SSPC-SP 16.
2. Prepare in accordance with CSM's instructions.

E. Cadmium-plated, zinc-plated, or sherardized fasteners:
1. Abrasive blast in the same manner as uncoated metal when assembling equipment designated for abrasive blasting.

F. PVC and FRP surfaces:
1. Lightly sand surfaces to be coated:
    a. Sand to remove gloss and establish uniform surface profile.
2. Vacuum to remove loose dust, dirt, and other materials.
3. Solvent clean with clean white rags and allow solvent to evaporate completely before applying coating materials.

## 3.08 APPLICATION REQUIREMENTS

A. Apply coatings in accordance with manufacturer's instructions.

B. Empty aboveground piping to be coated of contents when applying coatings.

C. Mechanical equipment shop primed by the manufacturer:
   1. Pumps and valves: Shop coat with manufacturer's highest quality coating system meeting the project specifications:
      a. Provide CTR shop coating reports.
   2. Non-immersed equipment: Touch up shop primer, and coat in the field with specified coating system after installation:
      a. If project requires equipment removal and reinstallation, complete touch-up coating after final installation.
   3. Immersed equipment not shop coated: Remove shop primer before surface preparation and field apply coating.

D. Verify surface preparation immediately before applying coating in accordance with SSPC-SP COM and the SSPC visual standard for the specified surface preparation method.

E. Allow surfaces to dry, except where coating manufacturer requires surface wetting before coating.

F. Wash coat and prime sherardized, aluminum, copper, and bronze surfaces, or prime with manufacturer's recommended special primer.

G. Do not apply coatings to a surface until it has been prepared as specified.

H. Use equipment designed to apply materials specified:
   1. Use compressors with moisture traps and filters that remove water and oils from the air:
      a. Perform a paper blotter test at the Engineer's request to verify air is sufficiently free of oil and moisture. Do not allow the amount of oil and moisture to exceed CSM-recommended amount.
   2. Equip spray equipment with properly sized mechanical agitators, pressure gauges, pressure regulators, and spray nozzles.

I. Where 2 or more coats are required, tint prime coat intermediate coats as necessary to distinguish each coating and to help indicate coverage:
   1. Do not use color additives with chromium, lead or lead compounds that hydrogen sulfide, other corrosive gases, might destroy or alter. Apply the specified number of coats.

J. Apply coating by brush, roller, trowel, or spray unless a specific application method is required by coating manufacturer's instructions or these Specifications:
   1. Apply primer or first coat by brush to power tool cleaned ferrous surfaces.
   2. Brush or spray-apply coats for blast-cleaned ferrous surfaces and subsequent coats for non-blast cleaned ferrous surfaces.
   3. After prime coat dries, mark, repair, and retest pinholes and holidays before intermediate or top coats are applied.

K. Spray application:
   1. With a brush, stripe coat edges, welds, corners, nuts, bolts, and difficult-to-reach areas, as necessary, before spray application to ensure specified coating thickness along edges.
   2. When using spray application, apply each coat to thickness no greater than recommended in coating manufacturer's instructions.
   3. Use airless spray method unless air spray method is required by CSM's instruction or these Specifications.
   4. Conduct spray coating under controlled conditions. Protect adjacent construction and property from coating mist, fumes, or overspray.

L. Lightly sand and thoroughly clean surfaces to receive high-gloss finishes unless CSM instructs otherwise.

M. Remove dust on coatings between coats.

N. Shop and field coats:
   1. Prime coat: Shop-apply or field-apply prime coats as specified. Use shop-applied primer compatible with the specified field coating system and apply at the minimum dry film thickness recommended by the finish coat CSM:
      a. Provide datasheets identifying the shop primer to on-site coating application personnel.
      b. Perform adhesion tests on the shop primer.
      c. Remove and recoat damaged, deteriorated, and poorly applied shop coatings.
      d. If shop primer coat meets this Section's requirements, spot prime exposed metal of shop-primed surfaces before spray applying primer over the entire surface.
   2. Field coats: Apply field coats with 1 or more prime coats and finish coats to build up coating to dry film thickness specified for the coating system:
      a. Do not apply finish coats until other work in the area is complete and previous coats are inspected.
   3. Adhesion confirmation: Perform adhesion tests after proper coating cure in accordance with ASTM D3359. Demonstrate that:
      a. Prime coat adheres to the substrate.
      b. Coatings adhere to the prime and intermediate coats:
         1) Coating 5 mils or more DFT: Achieve adhesion test result of 5A on immersed surfaces and 4A or better on other surfaces.
         2) Coating less than 5 mils DFT: Achieve adhesion test results of 5B on immersed surfaces and 4B or better on other surfaces.

O. Brush, roll, trowel, or spray and back roll coats for concrete and masonry.

P. Plural component coating application:
   1. Premix contents of component drums if required by the CSM each day.
   2. Before starting application:
      a. Verify gauges are working properly.
      b. Complete ratio checks.
      c. Sample the mix on plastic sheeting to ensure set time is appropriate and complete.
      d. Label and retain spray samples. Submit to Engineer when requested.

Q. Drying and recoating:
   1. Provide fans, heating devices, or other means to prevent condensate or dew on substrate surface or between coats and during curing after applying the last coat.
   2. Allow each coat to cure or dry thoroughly, in accordance with if required in CSM's printed instructions, before recoating.
   3. Use CSM's printed instructions and the requirements specified in this Section to determine minimum required drying time:
      a. Do not allow excessive drying time or exposure, which may impair bond between coats.
      b. Recoat coatings within time limits recommended by CSM.
      c. If time limits are exceeded, abrasive blast clean and de-gloss clean before applying another coat.
   4. If limitations on time between abrasive blasting and coating are not met before attaching components to surfaces that cannot be abrasive blasted, coat components before attachment.
   5. Ensure primer and intermediate coats of coating are unscarred and completely integral when applying each succeeding coat.
   6. Touch up suction spots between coats and apply additional coats where required to produce finished surface of solid, even color, free of defects.
   7. Leave no holidays. Repair holidays in accordance with the requirements on pertinent Coating Detail Sheets or as recommended by the CSM.
   8. Sand and feather into a smooth transition and recoat scratched, contaminated, or otherwise damaged coating surfaces so repairs are invisible to the naked eye.

R. Workmanship:
   1. Ensure that coated surfaces are free from runs, drips, ridges, waves, laps, and brush marks. Coats shall be applied to produce a smooth, even film of uniform thickness completely coating corners and crevices.
   2. Coat surfaces without drops, overspray, dry spray, excessive runs, ridges, waves, holidays, laps, or brush marks.
   3. Remove splatter and droppings after coating work is completed.
   4. Evenly apply each coat of material and sharply cut to a line created with masking tape or other suitable materials.
   5. Avoid over spraying or spattering paint on surfaces not to be coated. Protect glass, hardware, floors, roofs, vehicles, and other adjacent areas and installations by taping, drop cloths, or other suitable measures.
   6. When coating complex steel shapes, stripe coat welds, edges of structural steel shapes, metal cut-outs, pits in steel surfaces, or rough surfaces with the primer before overall coating system application:
      a. Brush apply stripe coat to ensure proper coverage.
      b. Do not stripe coat with spray or roller.
   7. Ensure that finish coat, including repairs, has a uniform color and gloss.

S. Coating properties, mixing, and thinning:
   1. Thin prime coat and apply as recommended by the CSM. Thinned coating must comply with prevailing air pollution control regulations.
   2. If maximum recoat time is exceeded, prepare surface with solvent washing, light abrasive blasting, or other procedures in accordance with CSM's instructions.

3. Allow adequate drying time between coats as instructed by the CSM, adjusted as necessary for the site conditions.
4. Ensure that coatings, when applied, provide a satisfactory film and a smooth even surface. Lightly sand glossy undercoats to provide a surface suitable for proper application and adhesion of subsequent coats. Thoroughly stir and strain coating materials during application and maintain uniform consistency.
5. Mix coatings with 2 or more components in accordance with CSM's instructions.
6. Where necessary to suit conditions of the surface, temperature, weather, and method of application, thin the coating in accordance with CSM's recommendations:
    a. Ensure that volatile organic content (VOC) of the thinned coating complies with prevailing air pollution control regulations.
    b. Thin coatings to only what is necessary to obtain proper application characteristics.
    c. Use a thinner recommended by the CSM.

T. Film thickness and continuity:
1. Apply coating to the specified thicknesses:
    a. Apply additional coats when necessary to achieve specified thicknesses, especially at edges and corners.
2. Verify WFT of the coating system first coat and after applying each subsequent coat.
3. Do not allow the minimum thickness at any point to deviate more than 25 percent from the required average.
4. Do not allow the surface area covered per gallon of coating for various types of surfaces to exceed those recommended by the CSM:
    a. Provide coating coverage worksheets listing the maximum and minimum coverage for each unit volume of coating for concrete surfaces.
5. Apply additional coats to achieve the specified dry film thickness if brush or roller application methods cannot achieve the specified film thicknesses per coat.

U. Protecting coated surfaces:
1. Do not handle, work on, or otherwise disturb coated items until the coating is completely dry and hard.
2. After installation, recoat shop-coated surfaces with specified coating system as necessary to match surrounding surfaces, and to coordinate with the specified color identification requirements.

V. Special requirements:
1. Before erection, apply all but the final finish coat to interior surfaces of roof plates, roof rafters and supports, pipe hangers, piping in contact with hangers, and contact surfaces inaccessible after assembly. Apply final coat after erection.
2. Coat structural slip-critical connections and high strength bolts and nuts after erection.
3. Areas damaged during erection:
    a. Prepare surface for spot repairs as specified for the coating system.
    b. Recoat with prime coat before applying subsequent coats.
    c. Touch up surfaces after installation.
    d. Clean and dry surfaces to be coated at time of application.

4. Coat underside of equipment bases and supports not galvanized with at least 2 coats of primer specified before setting the equipment in place.
5. Coat aluminum in contact with concrete.

## 3.09 COATING SYSTEM SCHEDULE

A. Attachment A - Schedule of Surfaces to be Coated specifies surfaces to be coated in the field with the coating systems required.

## 3.10 SURFACES NOT REQUIRING COATING

A. Stainless steel piping, valves, pipe supports, instrument sunshades.

B. Sliding surfaces on expansion joints, motor and pump shafts, machined surfaces at bearings and seals, grease fittings, etc.

C. Galvanized structural steel framing, galvanized roof decking, galvanized pipe supports.

D. Copper and brass pipe, fittings, valves, etc.

E. Bronze valves, bearings, bushings, and fasteners.

F. Corrosion resistant special alloys: Inconel, Alloy 20, Hastelloy, etc.

G. Exterior concrete.

H. Plastic surfaces except coat PVC, CPVC, and other plastic piping system exposed to sunlight.

I. Buried piping that is encased in concrete or cement mortar.

## 3.11 QUALITY CONTROL

A. Owner-provided inspection or inspection by others does not limit the Contractor's or CSA's responsibilities for quality workmanship or quality control as specified or as required by the CSM's instructions. Owner inspection is in addition to any inspection required of the Contractor.

B. Owner may perform, or contract with an inspection agency to perform, quality control inspection and testing of the coating work covered by this Section. These inspections may include the following:
1. Inspect materials upon receipt to ensure that the CSM supplied them.
2. Verify that specified storage conditions for the coating system materials, solvents, and abrasives are provided.
3. Inspect and record findings for substrate cleanliness.
4. Inspect and record pH of concrete and metal substrates.
5. Inspect and record substrate profile (anchor pattern).
6. Measure and record ambient air and substrate temperature.
7. Measure and record relative humidity.
8. Check for substrate moisture in concrete.

9. Verify that mixing of coating system materials is in accordance with CSM's instructions.
10. Inspect, confirm, and record that coating system materials' "pot life" is not exceeded during installation. Inspect to verify that recoat limitations for coating materials are not exceeded.
11. Perform adhesion testing.
12. Measure and record the coating system's thickness.
13. Verify proper curing of the coating system in accordance with the CSM's instructions.

## 3.12 CLEANUP

A. Remove surplus materials, protective coverings, and accumulated rubbish after completing coating. Thoroughly clean surfaces and repair overspray or other coating-related damage.

## 3.13 FINAL INSPECTION

A. Conduct final inspection of coating system work to determine whether it meets specifications requirements.

B. Conduct subsequent final inspection with the Engineer to ensure Work is in accordance with Contract Documents requirements.

C. Mark any rework required.
   1. Re-clean and repair, as specified, at no additional cost to the Owner.

END OF SECTION

## ATTACHMENT A - SCHEDULE OF SURFACES TO BE COATED

ATTACHMENT A
Schedule of Surfaces to be Coated

A. The following schedule is incomplete. Coat unlisted surfaces with same coating system as similar listed surfaces. Contact Engineer for clarification.

| | |
|---|---|
| EPU-M-1 | Ferrous / Non-Ferrous Metals, exterior |
| ACR-PVC-1 | Plastic pipe, exterior, non-immersed |

Notes:

1: Non-immersed ferrous metal surfaces include:
a. Pipe, valves, pipe hangers, supports and saddles, conduit, cable tray hangers, and supports.
b. Motors and motor accessory equipment.
c. Drive gear, drive housing, coupling housings, and miscellaneous gear drive equipment.
d. Valve and gate operators and stands.
e. Mechanical equipment supports, drive units, and accessories.
f. Bare electrical equipment: boxes, exposed conduit, and accessories.
g. Other miscellaneous metals.

2: Immersed ferrous metal surfaces include:
a. Interior surfaces of ferrous metal tanks.
b. Field priming of ferrous metal surfaces with defective shop-prime coat; including non-submerged service.
c. Bell rings, underside of manhole covers and frames.
d. Sump pumps, including underside of base plates and submerged suction and discharge piping.
e. Exterior of submerged piping and valves other than stainless steel or PVC piping.
f. Submerged pipe supports and hangers.
g. Stem guides.
h. Other submerged iron and steel metal unless specified otherwise.

# ATTACHMENT B - COATING DETAIL SHEETS

| Attachment B | | | |
|---|---|---|---|
| Coating Detail Sheet | | | |
| | | | |
| Coating System | EPU-M-1 | | |
| Coating Material | Two coats epoxy with polyurethane finish coat | | |
| Substrate | Metal | | |
| Products: One of the following or equal: | Primer | Intermediate Coat | Finish Coat |
| Carboline | Carboguard 890 | Carboguard 890 | Carbothane 134 VOC |
| International Paint | Devran 224V | Devran 224V | Devthane 379H |
| PPG | Amerlock 2VOC | Amerlock 2VOC | Amershield VOC |
| Sherwin Williams | Macropoxy 646 100 | Macropoxy 646 100 | Hi Solids Polyurethane 250 |
| Tnemec | Series 69 | Series 69 | Series 1095 |
| | | | |
| | | | |
| Service Condition | Interior or Exterior, subject to direct sunlight. Non-immersion. | | |
| | | | |
| Surface Preparation | | | |
| General | Prepare surfaces as specified in this Section and as follows. | | |
| Ferrous Metal | Bare surfaces: SSPC-SP10, Near-White Blast Cleaning.<br>Shop primed surfaces: SSPC-SP2, Hand Tool Cleaning or SSPC-SP3, Power Tool Cleaning.<br>Damaged primer or rust: SSPC-SP10, Near White Blast Cleaning and spot prime. | | |
| Nonferrous Metal | SSPC-SP16, Brush Blast Cleaning. | | |
| Galvanized Metal | SSPC-SP16, Brush Blast Cleaning. Test for surface contaminants. | | |
| | | | |
| Surface Profile | | | |
| Ferrous Metal | 2.5 to 3.0 mils | | |
| Nonferrous Metal | 1.5 to 2.0 mils | | |
| Galvanized Metal | 1.5 to 2.0 mils | | |
| | | | |
| System Thickness (Dry Film) | | | |
| Total | 10 to 13 mils | | |
| Primer | 4 to 5 mils | | |
| Intermediate Coat | 4 to 5 mils | | |
| Finish Coat | 2 to 3 mils | | |
| | | | |
| Application | | | |
| Special CTR Training | Not required. | | |

| Attachment B | | | |
|---|---|---|---|
| Coating Detail Sheet | | | |
| | | | |
| Coating System | ACR-PVC-1 | | |
| Coating Material | Acrylic | | |
| Substrate | PVC and CPVC pipe | | |
| Products: One of the following or equal: | Primer | Intermediate Coat | Finish Coat |
| Carboline | Sanitile 120 | None Applied | Carbocrylic 3359 DTM |
| International Paint | Devcryl 1440 | None Applied | Devcryl 1448 |
| PPG | Pitt Tech Plus Primer | None Applied | Pitt Tech Plus |
| Sherwin Williams | Sher Cryl HPA | None Applied | Sher Cryl HPA |
| Tnemec | Series 1028 or 1029 | None Applied | Series 1028 or 1029 |
| | | | |
| | | | |
| Service Condition | Exterior, exposed to direct sunlight, non-immersed. | | |
| | | | |
| Surface Preparation | Prepare surfaces as specified in this Section and as follows. | | |
| General | Clean to remove loose dirt, dust, or other contaminants.<br>Sand surfaces to achieve a uniform, roughened surface profile.<br>Solvent clean and vacuum to remove loose debris. | | |
| Surface Profile | 1.5 to 2.0 mils | | |
| | | | |
| System Thickness (Dry Film) | | | |
| Total | 4 to 8 mils | | |
| Primer | 2 to 4 mils | | |
| Finish Coat | 2 to 4 mils | | |
| | | | |
| Application | | | |
| Special CTR Training | Not required. | | |

# SECTION 11246

# POLYMER BLENDING AND FEED EQUIPMENT: LIQUID

## PART 1 GENERAL

### 1.01 SUMMARY

A. Section includes:
   1. Complete and operational automatic polymer blending and feed system.

B. Equipment tag numbers:
   1. Polymer Feed System: POL911.

### 1.02 REFERENCES

A. CSA International (CSA).

B. National Electrical Manufacturers Association (NEMA).

C. Underwriters Laboratories, Inc. (UL):
   1. 508 - Standard for Industrial Control Equipment.
   2. 508A - Standard for Industrial Control Panels.
   3. 1283 - Standard for Electromagnetic Interference Filters.
   4. 1449 - Surge Protective Devices.

### 1.03 DELEGATED DESIGN

A. Anchoring and bracing.

### 1.04 SUBMITTALS

A. Product Submittals:
   1. Product data.
   2. Shop Drawings:
      a. Showing both isometric and orthogonal views of the proposed installation, including dimensions, weights, and complete parts list.
      b. Vendor control panel (VCP):
         1) Wiring schematics and control panel layouts:
            a) Scaled interior and exterior front and side elevations with dimensions and bill of materials.
            b) Wiring schematics including wire numbers and terminal numbers.
            c) Single-line diagram of power distribution.
   3. Hydraulic characteristics of the mixer.
   4. Motor data as specified in Section 16000 - Requirements for Electrical Work.

B. Delegated Design Submittals:
   1. Anchoring and bracing: Provide project-specific calculations based on support conditions and requirements to resist loads specified in Section 01612 - Seismic Design Criteria:
      a. To structures for equipment installed in structures designated as seismic design category C, D, E, or F.

C. Calculations.

D. Installation instructions:
   1. Detail the complete installation of the equipment including rigging, moving, and setting into place.
   2. Provide manufacturer's installation instructions.

E. Commissioning Submittals:
   1. Include the following:
      a. Manufacturer's representative qualifications.
      b. Certificates:
         1) Requirements as specified in this Section.
      c. Test Plans:
         1) Test requirements as specified in this Section.
      d. Test Reports.
      e. Manufacturer's representatives field notes and data.
      f. Owner Training.

F. Operation and maintenance manuals.

## 1.05 DELIVERY, STORAGE, AND HANDLING

A. As specified in Division 01 and Section 15050 - Common Work Results for Mechanical, and the manufacturer's instructions.

## 1.06 WARRANTY

A. Provide warranty as specified in Division 01.

B. Special warranty:
   1. Provide warranty on polymer blending mixing chamber for the life of the system to be free of defects in workmanship or materials:
      a. This extended warranty shall not apply if the damage is caused by freezing or other weather related damage or over-pressure.
      b. If the mixing chamber plugs a replacement mixing chamber will be provided at no cost to the Owner.
      c. This additional warranty does not cover the replacement of seals or motors, where applicable.
      d. Warranty shall apply regardless whether potable or non-potable water is used.

## PART 2 PRODUCTS

### 2.01 GENERAL

A. Provide integrated equipment package capable of automatically metering, diluting, blending, activating, and feeding liquid polymer and water.

### 2.02 MANUFACTURERS

A. One of the following or equal:
   1. UGSI (cleanwater1), Dynablend Polymer Feeder, model L4S.
   2. VeloDyne, VeloBlend VM Series, model VM6.

### 2.03 DESIGN AND PERFORMANCE CRITERIA

A. Design requirements:
   1. Activate concentrated emulsion polymer in a multi-zone hydro-mechanical, mechanical mixing vessel or hydro non-mechanical mix chamber with a tapered mixing regime and dilution water.

B. Pre-assemble and shop-test system to ensure compliance with pressure and operational requirements.

C. Existing Polymer Feed Characteristics:
   1. Polymer type: Praestol™ K148 L-VA Flocculant
   2. Polymer components activity (percent active):
      a. Distillates (Petroleum), Hydrotreated heavy naptha, approximately 20 percent to 30 percent.
      b. Hydrocarbons, C12-C15, n-alkanes, isoalkanes, cyclics, < 2 percent aromatics, approximately 10 percent to 15 percent.
      c. Ethoxylated alcohol surfactant, approximately 1.5 percent to 5 percent.
   3. Active polymer consumption: approximately 1.5 gph.
   4. Final percent solution desired (polymer to water): 0.50 percent.
   5. Percent solids of digested sludge feed: 1.75 to 4.5 percent, with average of 2.6 percent.

D. Maximum water pressure available for dilution water is approximately 58 pounds per square inch:
   1. Anticipated backpressure on the blending unit: 23 pounds per square inch.

### 2.04 MATERIALS

A. General:
   1. System shall be constructed with a Type 316 stainless steel chassis.
   2. Hardware shall be Type 316 stainless steel.
   3. Any components in contact with polymer or water shall be constructed of electrolysis nickel-plated brass, stainless steel, or an inert plastic.

## 2.05 EQUIPMENT

A. Mixing requirements:
   1. Mixing system shall be specifically designed to invert, disperse, and activate in solution emulsion and dispersion polymers with viscosities from 200 to 6,000 cps.
   2. Mixing system shall be designed to effectively induce high, non-damaging mixing energy over the systems full flow range.
   3. Mechanical Mixing: Mixing energy shall be provided by a variable speed stainless steel or bronze mixing impeller. Plastic impellers are not acceptable:
      a. Mixer impeller shall be controlled by a SCR or VFD controller and driven by a wash down duty motor.
      b. Mixer drive shaft shall be sealed by a mechanical seal, which shall have an integrally mounted and factory plumbed seal mounted and flushing valve. Seal shall be easily accessible for replacement.

B. Mixing chamber:
   1. 316 Stainless Steel body and cap where available, otherwise cast steel.
   2. Maximum rated pressure of 100 pounds per square inch.
   3. Provide a brass mixing chamber pressure relief valve and drain valve.
   4. Bearings shall be external from the mixing chamber.
   5. Mechanical Mixing Motor: 1/2 horsepower, 90 VDC, 1,750 revolutions per minute, wash-down duty.
   6. Polymer check valve:
      a. Specifically designed to isolate neat polymer from dilution water.
      b. Readily accessible for cleaning without the use of tools.
      c. Installed inside the mixing chamber not allowed.
      d. Mixing chamber disassembly for access not allowed.
      e. Conventional ball type check valves not allowed.

C. Dilution water system:
   1. System shall include an adjustable pressure regulator to reduce plant water pressure down to the allowable system pressure.
   2. Unit shall have an electric solenoid valve for on/off control of total dilution water flow.
   3. Provide a 2-1/2-inch stainless steel liquid filled pressure gauge to monitor dilution water inlet pressure.
   4. Provide a Type NEMA Type 4 rated differential pressure switch:
      a. Differential pressure switch shall have a cast aluminum housing and brass and stainless steel wetted parts.
      b. Plastic pressure switches shall not be acceptable.

D. Solution discharge system:
   1. Pressure gauge:
      a. Size: 2-1/2-inch.
      b. Materials: Type 304 stainless steel.
      c. Liquid filled with diaphragm seal.
   2. Check valve:
      a. Type: Flapper.
      b. Materials: PVC, Viton™, stainless steel.
      c. Size: Same size as the solution discharge piping.

E. System skid:
   1. Frame:
      a. Material: Type 304 stainless steel:
         1) Mild steel not accepted.
      b. Design: Easy access to all components.
   2. All piping rigidly supported.
   3. Pump suction mounting height not to exceed 12 inches from the bottom of the skid.
   4. 304 Stainless Steel Sun/Rain shield.

F. Neat polymer metering pump:
   1. 1 per blending unit.
   2. Integrally mounted on system skid.
   3. Range: 0.125 to 5.0 gallons per hour.
   4. Peristaltic type.
   5. Peristaltic pump body to be non-metallic.
   6. Dilution water flow rate range: 120 to 1200 gallons per hour.
   7. Accessories:
      a. Polymer flow sensor:
         1) Thermal type.
         2) Wetted parts: Type 304 stainless steel.
         3) Mount on system skid with Type 304 stainless steel bracket.
         4) Mount with polymer piping is not acceptable.
      b. Pressure relief valve:
         1) Materials: PVC and Viton™.
         2) Location: Discharge line of the pump.
         3) Factory plumbed back to suction of the pump.
      c. Pressure gauge:
         1) Size: 2-1/2-inch.
         2) Materials: Type 304 stainless steel.
         3) Liquid filled with diaphragm seal.
         4) Location: Discharge line of the pump.
   8. Capable of pumping polymer with apparent viscosities of up to 454 mm2/s.
   9. Capable of a 3.5-feet suction lift of polymer to ensure no loss of suction upon low drum storage levels.

## 2.06 ACCESSORIES

A. Calibration cylinder:
   1. Quantity: 1 per pump or 1 per system.
   2. Volume: 200 to 250 milliliter.
   3. Graduation:
      a. Minimum increments of 2.5 millimeters.
      b. Read in gallons per hour and millimeters.
   4. Construction: Clear polyvinyl chloride.
   5. Configuration:
      a. Nipple and plug for system operation without cylinder.
      b. Full port PVC ball valves having Viton™ O-rings:
         1) Locate 1 ball valve on the discharge of the calibration column.
         2) Locate 1 ball valve on the neat polymer inlet pipe up stream of the calibration column discharge valve.

6. Assembly:
    a. Furnished and rigidly installed on polymer system skid.
    b. Use of piping for support is not acceptable.
7. Calibration: 1 minute drawdown.

B. Polymer tote pump suction assembly:
1. Quick disconnect cam-lock fittings.
2. Full port ball valve 1-inch.
3. Braided PVC hose 1-inch, 15-feet long.

## 2.07 VENDOR CONTROL PANEL

A. General:
1. VCP components and construction shall be as specified in Section 13000 - Instrument and Control System.
2. Provide a separate control panel for each polymer blending and feed unit.
3. Provide components and equipment with UL 508 listing.
4. Provide control panels with UL 508A labeled.
5. VCP shall be fully functional, wired, and factory tested prior to shipment:
    a. Provide field wiring terminal strips for external connections.
6. Provide surge protection on the incoming power feed:
    a. Provide UL 1449 rated SPD and UL 1283 rated EMI filter on 120 VAC panel power source.
7. Provide necessary control hardware and components as required for a fully functional and operational installation.
8. Power supply:
    a. 120 VAC, 1-phase, 60 hertz.
    b. Provide a No. 12 AWG SO cord with plug or a main circuit breaker with operating handle located on front of the VCP.

B. Enclosures and panel components:
1. Enclosure:
    a. Manufacturers: One of the following or equal:
        1) nVent/Hoffman.
        2) Saginaw Control & Engineering.
    b. Rating: NEMA Type 4X.
    c. Mounted on the equipment skid.

C. Direct current motor controllers (SCR):
1. Input voltage: 120 VAC, 1-phase, 60 hertz.
2. Output voltage: 0 to 90 VDC.
3. Silicone controlled rectifiers for full wave rectification.
4. Trim potentiometers.
5. Polymer metering pump speed control:
    a. Potentiometer on the VCP.
    b. 4 to 20 mA signal.

D. Pilot devices:
1. System On-Off-Remote selector switch.
2. Polymer metering pump potentiometer.
3. Power on pilot light.

4. System running pilot light.
5. Low differential water pressure pilot light.
6. Low polymer flow pilot light.
7. Polymer flow rate panel meter.

E. Hardwired monitoring and control:
1. Dry contact rating: 120 VAC.
2. Analog signal type: 4 to 20 mA.
3. VCP inputs:
   a. Start/Stop.
   b. Polymer feed pump speed control.
4. VCP outputs:
   a. Polymer flow analog signal.
   b. Remote mode.
   c. System running.
   d. Common alarm.

F. Hardwired control functions:
1. Provide a loss of flow sensor which, sensing that dilution water flow has been interrupted, will place the polymer pump on standby and will restart it automatically when flow is restored.

## 2.08 SPARE PARTS AND SPECIAL TOOLS

A. Provide spare parts that are required to provide uninterrupted operation for a minimum of 2 years.

B. Provide 1 complete set of special tools needed to assemble and disassemble the system.

C. For peristaltic pump, provide one complete set of tubing.

# PART 3 EXECUTION

## 3.01 PREPARATION

A. Anchoring and bracing to structures:
1. Prepare equipment anchor setting template(s) and use to position anchors during construction of supporting structure(s).
2. Install anchors of type and material indicated on approved anchoring designs.
3. Install anchors with embedment indicated on approved anchoring designs.

## 3.02 INSTALLATION

A. Install the equipment in accordance with the accepted installation instructions and anchorage details.

B. Alignment of piping may vary from that indicated on the Drawings:
1. Upon acceptance by the Engineer, align piping to suit the equipment furnished, without additional cost to the Owner.

C. Flush out water line until water discharged from line is clear and free of debris.

D. Avoid exposing neat polymer lines to water at any point of the system.

## 3.03 COMMISSIONING

A. Source Testing:
   1. Not witnessed.
   2. Test as specified in Section 15958 - Mechanical Equipment Testing:
      a. Conduct Level 1 General Equipment Performance Test.
      b. Conduct Level 1 Vibration Test.
   3. Furnish test reports and Manufacturer's Certificate of Source Testing.

B. Installation Verification:
   1. Furnish Manufacturer's Certificate of Installation Verification.

C. Functional Testing:
   1. Witnessed.
   2. Test as specified in Section 15958 - Mechanical Equipment Testing:
      a. Conduct Level 1 General Equipment Performance Test.
      b. Conduct Level 1 Vibration Test.
   3. Furnish test reports and the Manufacturer's Certificate of Functional Compliance.

## 3.04 OWNER TRAINING

A. Perform Owner Training:
   1. Number of sessions:
      a. Operations 1.
      b. Maintenance 1.

## 3.05 MANUFACTURER'S SERVICES

A. Include a 1-day site visit during the first year of operation as coordinated with the Owner.

END OF SECTION

# SECTION 11312T

# VERTICAL DOUBLE DISC PISTON SLUDGE PUMPS

## PART 1 GENERAL

### 1.01 SUMMARY

A. Section includes:
   1. Double-disc pumps with drivers and features as scheduled.
   2. Tag numbers: As specified in the Pump Schedule.

### 1.02 REFERENCES

A. American Society of Mechanical Engineers (ASME):
   1. B16.1 - Cast Iron Pipe Flanges and Flanged Fittings, Class 25, 125, and 250.
   2. B16.5 - Pipe Flanges and Flanged Fittings: NPS 1/2 through 24.

B. Hydraulic Institute (HI):
   1. 9.1-9.5 - Pumps - General Guidelines.
   2. 14.1-14.2 - Rotodynamic Pumps for Nomenclature and Definitions.
   3. 14.3 - Rotodynamic Pumps for Design and Application.
   4. 14.4 - Rotodynamic Pumps for Installation Operation and Maintenance.

C. Occupational Safety and Health Administration (OSHA).

### 1.03 TERMINOLOGY

A. The words and terms listed below are not defined terms that require initial capital letters, but, when used in this Section have the indicated meaning:
   1. Pump head (total dynamic head, TDH), flow capacity, pump efficiency, net positive suction head available (NPSHa), and net positive suction head required (NPSHr): In accordance with HI 9.1-9.5, 14.1-14.2, 14.3, 14.4, and as modified in this Section.
   2. Suction head: Gauge pressure available at pump intake flange or bell in feet of fluid above atmospheric; average when using multiple suction pressure taps, regardless of variation in individual taps.
   3. Tolerances: In accordance with HI 9.1-9.5, 14.1-14.2, 14.3, and 14.4, unless specified more restrictively.

### 1.04 DELEGATED DESIGN

A. Anchoring and bracing.

## 1.05 SUBMITTALS

A. Delegated Design:
   1. Anchoring and bracing: Provide project-specific calculations based on support conditions and requirements to resist loads specified in Section 01612 - Seismic Design Criteria:
      a. To structures for equipment installed in structures designated as seismic design category C, D, E, or F.
      b. For equipment installed outdoors.
      c. For wall mounted equipment weighing 125 pounds or more.

B. Commissioning Submittals:
   1. Manufacturer's representative qualifications.
   2. Certificates:
      a. Requirements as specified in this Section.
   3. Test Plans:
      a. Test requirements as specified in this Section.
   4. Test Reports.
   5. Manufacturer's representatives field notes and data.
   6. Owner Training.

C. Product Submittals:
   1. Product data.
   2. Shop Drawings.
   3. Manufacturer's instructions.
   4. Calculations.
   5. Schedules.

D. Operation and maintenance manuals.

## 1.06 DELIVERY, STORAGE, AND HANDLING

A. As specified in Division 01 and Section 15050 - Common Work Results for Mechanical, and the manufacturer's instructions.

## 1.07 WARRANTY

A. As specified in Division 01.

# PART 2 PRODUCTS

## 2.01 MANUFACTURER

A. Pump: One of the following, or equal:
   1. Penn Valley, 3-inch Model 3DDSX22.

## 2.02 DESIGN AND PERFORMANCE CRITERIA

A. Double disc sludge pump: Provide components as specified and other items as required for a complete and operational system.

B. Design requirements:
   1. Pump performance characteristics: As specified in the Pump Schedule.
   2. Motor characteristics: As specified in the Pump Schedule.

C. Product requirements:
   1. As specified in Division 01 and Section 15050 - Common Work Results for Mechanical Equipment.

## 2.03 PERFORMANCE AND DESIGN REQUIREMENTS

A. Performance and design requirements shall be as scheduled.

B. Pumps shall be capable of:
   1. Providing 0.22 gallons per revolution for 3-inch pumps.
   2. Operating dry for an indefinite period of time without damage.
   3. Self-priming up to 14 inches of Hg and 25 inches of Hg when fully primed.

## 2.04 PUMP COMPONENTS

A. Pump housing:
   1. Each pump shall be a simplex heavy duty, double disc, positive displacement type, with Class 30 Cast Iron Housings:
      a. Duplex pumping arrangements are not acceptable.
   2. Pump shall consist of 3 housings horizontally split to allow access to the internal components.
   3. Pump shall incorporate a repair-in-place hinged design that allows the pump to be serviced and discs replaced without removal of the pump or disturbing the suction and discharge piping.
   4. Discharge housing shall contain the mounting lugs and be bolted directly to the mounting frame.
   5. Discharge, intermediate and suction housings shall incorporate an integral hinge arrangement that allows the suction and intermediate housings to be lowered and removed.
   6. Hinges shall be connected to each other with a quick release ball detent pin allowing for easy pin removal.

B. Flexible disc:
   1. Pumping action shall be achieved by 2 reciprocating discs attached to high tensile aluminum connecting rods driven by a rotating eccentric shaft.
   2. Suction and discharge discs shall be universal and interchangeable with each other.
   3. Discs shall be of integral design and constructed of high tensile neoprene with multiple layers of fabric for longevity and strength.
   4. Each disc shall be mounted to the connecting rod by a stub shaft constructed of hardened high tensile 400 series stainless steel.
   5. Reciprocating action of the discs shall also perform the duty of valves.

C. Pump seal:
   1. Sealing of the pump fluid chamber shall be achieved by flexible trunnions:
      a. Trunnion construction shall be of fabric-reinforced neoprene and shall be capable of withstanding pressures from 0 to 110 pounds per square inch on an intermittent basis.
   2. Maximum operating pressure is 140 feet TDH.
   3. Pump designs utilizing packing glands, mechanical seals or water seal systems will not be acceptable.

D. Swan neck entry port:
   1. 2-piece design allowing for mounting of the suction connection in 90-degree increments and easy access for clack replacement.
   2. Opening shall be a full 3-inch diameter with a minimum opening of 7.065 square inches for 3-inch pumps.

E. Clack valve:
   1. Seating surface shall be machined on the mounting face of the swan neck.
   2. Integrally mounted to the swan neck to facilitate access and replacement.
   3. Manufactured of neoprene construction with multiple layers of fabric encapsulating a rigid core.
   4. Incorporate an integral O-ring seal for positive sealing. Designs that incorporate a separate clack valve plate and smaller diameter opening are not acceptable.

F. Drive shaft:
   1. Bearing drive assembly shall consist of 2 aluminum modular pedestals designed to provide accurate bearing alignment, superior bearing loading and ease of assembly.
   2. Minimum of 1-3/8-inch diameter for 3-inch and 4-inch pumps and capable of withstanding a dead head situation.
   3. Constructed of hardened 400 series high-tensile stainless steel and shall be mounted on 4 self-aligning, sealed bearings.
   4. Eccentric cams shall be constructed of high-tensile, cast bronze alloy and shall be pinned to the shaft by Spirol drive pins to allow for the absorption of reciprocating loads generated by the pumping action.
   5. Pump drive assemblies that utilize keyways and setscrews will not be acceptable.
   6. Drive bearings must be completely sealed with no provisions for scheduled grease lubrication.
   7. No grease fittings shall be supplied for the bearings.

G. Belt drive assembly:
   1. Pump shall be driven through a V-belt and drive assembly consisting of a 2 or 3 groove Type B arrangement.
   2. Pulley ratios shall be sized to provide the maximum pump speed listed in the Pump Schedule in this Section and to provide the required torque generated between the pump and motor.

H. Guards and covers:
   1. Pump shall be provided with OSHA approved guards and covers.
   2. V-belt drive cover and pump drive assembly cover shall be manufactured from Type 316 stainless steel.

I. Base:
   1. Each pump and V-belt assembly shall be mounted on a common Type 316L stainless steel sub base.
   2. Design shall have raised cross-members on the suction and discharge end to allow for complete wash-out and draining without trapping liquid.
   3. Each sub base shall be manufactured from 2 inch for 3-inch and 4-inch pumps Type 316 stainless steel square tubing.
   4. Base shall be sufficiently gusseted, reinforced, and braced to withstand all shock loads and resist all wearing and buckling during pump operation.
   5. Tubing ends shall be capped with black plastic plugs for neat appearance.

J. Pulsation dampener:
   1. Provided on the suction and discharge lines.
   2. 6-inch diameter for 3-inch and 4-inch pumps Type 316 stainless steel, with fully welded end caps.
   3. Pressure tested to 60 pounds per square inch for leaks.
   4. Each dampener shall be provided with a 1-inch half coupling located at the top.
   5. Connection shall be suitable for the vacuum and pressure switch assembly.
   6. Each dampener shall be supplied with a 1-1/2-inch NPT coupling and plug in the bottom to act as a drain/sample port.
   7. Bladder type and 3-piece assemblies using connecting rods and gasket are not acceptable.

K. Suction and discharge piping connections: Flanged meeting ASME B16.1, Class 125, or ASME B16.5, Class 150; provide higher pressure class as required to meet design working pressure.

## 2.05 SUCTION VACUUM AND DISCHARGE PRESSURE PROTECTION

A. Pump manufacturer shall provide a suction vacuum sensor and switch assembly to mount on the suction pulsation dampener and discharge pressure sensor and switch to mount on the discharge pulsation dampener:
   1. Sensors shall be a PVP420, Red Valve 42/742 or equal 1-inch NPT isolation pressure sensor with Type 316 stainless steel body and EPDM elastomeric sensing tube.
   2. Gauge and switch shall be attached to the sensor with Type 316 stainless steel fittings.
   3. Vacuum assembly shall be fitted with 4-inch stainless steel 30 inches of Hg - 30 pounds per square inch gauge and Ashcroft, Barksdale, or equal adjustable vacuum switch set at 10 inches of Hg.
   4. Units shall be capable of being cleaned in place by simply using the process pressure through a Type 316 stainless steel isolation valve mounted to the top of the sensor.
   5. Opposite end of the valve shall be fitted with a universal, quick acting coupling, suitable for compressed air.
   6. valve connection will be suitable to charge the dampener with compressed air.

## 2.06 EQUIPMENT GUARDS

A. Provide equipment safety guards as specified in Section 15050 - Common Work Results for Mechanical Equipment.

## 2.07 DRIVERS

A. Horsepower:
   1. As scheduled.
   2. Listed driver horsepower is the minimum to be supplied:
      a. Increase driver horsepower if required to prevent driver overload while operating at any point of the supplied pump operating head-flow curve.
      b. When scheduled driver is a motor, increase motor horsepower if required to prevent operation in the service factor.
      c. Make structural, mechanical, and electrical changes required to accommodate increased horsepower.

B. Motors: As specified in Section 16000 - Requirements for Electrical Work, and this Section:
   1. RPM: As scheduled.
   2. Enclosure: As scheduled.
   3. Electrical characteristics: As scheduled.
   4. Efficiency, service factor, insulation, and other motor characteristics: As specified in Section 16000 - Requirements for Electrical Work.
   5. Motor accessories: As specified in Section 16000 - Requirements for Electrical Work, and this Section.
   6. Coordinate motors with the variable frequency drive manufacturer to ensure compatibility between the motor and variable frequency drive.
   7. Provide motor with thermal overload, space heater and AEGIS shaft grounding rings.
   8. Variable frequency drive shall be suitable for use with a constant torque pump.

C. Other drivers: As scheduled and as specified in sections listed in the Schedule.

## 2.08 ANCHOR BOLTS

A. As specified in Section 05190 - Mechanical Anchoring and Fastening to Concrete and Masonry.

## 2.09 SPARE PARTS AND SPECIAL TOOLS

A. Spare parts: Deliver the following:
   1. Provide 1 set for each pump supplied consisting of:
      a. 2 Universal Discs.
      b. 2 Trunnions Seals.
      c. 1 Discharge Gaskets.
      d. 1 Suction on Gaskets.
      e. 1 Swan Neck Gasket.
      f. 1 Clack valve with gasket and retaining screws.
      g. 1 Set of V-Belts.

B. Special tools: Provide 1 disc removal tool for each size pump specified.

## PART 3 EXECUTION

### 3.01 PREPARATION

A. Anchoring and bracing to structures:
   1. Prepare equipment anchor setting template(s) and use to position anchors during construction of supporting structure(s).
   2. Install anchors of type and material indicated on approved anchoring designs.
   3. Install anchors with embedment indicated on approved anchoring designs.

### 3.02 INSTALLATION

A. Install the equipment in accordance with the accepted installation instructions and anchorage details.

B. Dowel to frame after alignment in the field to facilitate realignment after disassembly.

C. Install and align on a concrete pad as indicated on the Drawings.

D. Brace piping at suction and discharge connections to withstand all shock loads and vibration.

### 3.03 COMMISSIONING

A. Source Testing (Factory Acceptance Tests):
   1. Not witnessed.
   2. Furnish test reports and Manufacturer's Certificate of Source Testing.
   3. Equipment testing:
      a. Pump:
         1) Performance test: Test level as scheduled; test as specified in Section 15958 - Mechanical Equipment Testing.
         2) Vibration test: Test level as scheduled; test as specified in Section 15958 - Mechanical Equipment Testing.
         3) Noise test: Test level as scheduled; test as specified in Section 15958 - Mechanical Equipment Testing.
         4) Pump casing: Hydrostatic pressure tests if specified in this Section.

B. Installation Verification:
   1. Furnish Manufacturer's Certificate of Installation Verification.

C. Functional Testing:
   1. Equipment testing:
      a. Pump:
         1) Performance test: Test level as scheduled; test as specified in Section 15958 - Mechanical Equipment Testing.
         2) Vibration test: Test level as scheduled; test as specified in Section 15958 - Mechanical Equipment Testing.
         3) Noise test: Test level as scheduled; test as specified in Section 15958 - Mechanical Equipment Testing.

D. Owner Training:
   1. Not required.

## 3.04 PUMP SCHEDULE

| Tag Numbers | P910 |
|---|---|
| **General Characteristics:** | |
| Service | Anaerobically Digested Sludge |
| Quantity | 1 |
| Minimum Pumped Fluid Temperature, degrees Fahrenheit | 50 |
| Normal Pumped Fluid Temperature, degrees Fahrenheit | 95 |
| Maximum Pumped Fluid Temperature, degrees Fahrenheit | 110 |
| Rotordynamic Analysis Level | None |
| Vibration Analysis Expert | Not Required |
| Percent Solids, Normal | 1.75 |
| Percent Solids, Maximum | 4.5 |
| Solid Sphere Diameter Passing, Minimum (in.) | 2 |
| **Pump Characteristics:** | |
| Coupling Type | V-Belt |
| Speed Control | Variable Frequency Drive |
| Maximum Pump rpm | 270 |
| Minimum Pump rpm | 32 |
| **Rated Design Point (At Maximum rpm):** | |
| Flow, gpm | 64 |
| Head, Feet | 45 |
| **Rated Design Point No. 2 (At Minimum rpm):** | |
| Flow, gpm | 7 |
| Head, Feet | 62 |
| **Rated Design Point No. 3:** | |
| Flow, gpm | 34 |
| Head, Feet | 52 |
| **Pump Materials:** | |
| Pump Casing | Cast Iron |
| Elastomers | Buna-N |
| Connecting Rods | High Tensile Aluminum |
| Shaft | High Tensile 400 Series SS |

| Tag Numbers | P910 |
|---|---|
| Bearing Pedestals | Aluminum |
| Base | 316 SS welded |
| **Driver Characteristics:** | |
| Driver Type | Motor |
| Drive Arrangement | Belt Drive, Side Motor Mount |
| Minimum Driver Horsepower | 5 |
| Maximum Driver Speed, rpm | 1200 |
| **Motor Characteristics:** | |
| Inverter Duty Rated | Yes |
| Enclosure Type | TEFC |
| Voltage/Phases/Hertz | 460/3/60 |
| **Source Testing:** | |
| Performance Test Level | 1 |
| Vibration Test Level | None |
| Noise Test Level | None |
| **Functional Testing:** | |
| Performance Test Level | 1 |
| Vibration Test Level | None |
| Noise Test Level | None |

END OF SECTION

# SECTION 11384

# DEWATERING SCREW PRESS SYSTEM

## PART 1 GENERAL

### 1.01 SUMMARY

A. Scope of work includes:
   1. Rehabilitation and relocation of the existing dewatering system to the Equalization Structure as shown the Contract Drawings, including 1 existing dewatering screw press (manufactured by FKC) and all auxiliary equipment to make a complete dewatering system including, flocculation tank with mixer, headbox, control panel and features specified in this Section and scheduled below. Shop drawings and specifications are included in Appendix A.
      a. Coordinate with FKC about existing dewatering system disassembly, inspection, reassembly, and re-commissioning.
      b. Disassembly of the existing dewatering system as needed to facilitate inspection by FKC and relocation to Equalization Structure.
      c. While the dewatering screw press is dissembled, FKC shall perform inspection and rehabilitation/replacement of worn components for the screw press, including complete replacement of the screw press covers, motor, gearbox, spherical roller bearings and oil seals as listed in Section 2.02
      d. Reassembly of the dewatering screw press system at the Equalization Structure.
      e. Recommissioning of the existing dewatering screw press system.
      f. Replacement of the flocculation tank motor, gearbox and agitator as listed in Section 2.03.
      g. Replacement of headbox level transmitter.
      h. Modifications to existing screw press control panel.
      i. Furnishing and installation of a backup control panel.

B. Tag Numbers:
   1. Screw Press – ME915.

### 1.02 REFERENCES

A. American Society of Mechanical Engineers (ASME):
   1. B16.1 - Gray Iron Pipe Flanges and Flanged Fittings: Classes 25, 125, and 250.
   2. B16.5 - Pipe Flanges and Flanged Fittings: NPS 1/2 through NPS 24 inch Standard.

B. Instrumentation Controls Specialty Contractor (ICSC).

C. National Electrical Code (NEC).

D. National Electrical Manufacturers Association (NEMA):
   1. 250 - Enclosures for Electrical Equipment (1000 V Maximum).

E. Underwriters Laboratories, Inc. (UL):
   1. 508 - Standard for Industrial Control Equipment.
   2. 508A - Standard for Industrial Control Panels.
   3. 698A - Standard for Industrial Control Panels Relating to Hazardous (Classified) Locations.
   4. 1283 - Standard for Electromagnetic Interference Filters.
   5. 1449 - Surge Protective Devices.

## 1.03 SCREW PRESS DESCRIPTION

A. The existing screw press system is capable of dewatering digested sludge. The weight of the screw press is approximately 20,000 lbs. The weight of the flocculation/headbox is approximately 1,600 lbs.

## 1.04 SUBMITTALS

A. Submit as specified in Division 01 and Section 15050 - Common Work Results for Mechanical Equipment.

B. Calculations: As specified in Section 15050 - Common Work Results for Mechanical Equipment and Division 01, and including the following to support structural adequacy of the screw press, and all associated equipment by a registered professional structural Engineer in the State of California:
   1. Structural anchor points to concrete foundation.
   2. Seismic loads on frame and anchor bolts.

C. Resume of Technician to perform thickener screw press adjustments, inspections, observations of test operations, and supervision of testing.

D. Training course outline.

E. Manufacturer's references as specified in this Section.

F. Commissioning submittals:
   1. Provide Manufacturer’s Certificate of Installation and Functionality Compliance.

G. Quality control submittals:
   1. Manufacturer's Installation Instructions.

H. Disassembly, relocation, reassembly and recommissioning plan. Plan shall be reviewed by FKC and approved prior to disassembly.

I. Inspection and rehabilitation plan by FKC.

## 1.05 WARRANTY

A. Provide warranty as specified in Division 01.

## 1.06 PROJECT CONDITIONS

A. Environmental requirements: As specified in Section 15050 - Common Work Results for Mechanical Equipment.

# PART 2 PRODUCTS

## 2.01 MANUFACTURER

A. Existing screw press manufacturer: FKC Co., LTD, Model SHX-900x5000L.

B. Existing flocculation tank manufacturer: FKC Co, LTD, Model FT-285 gallon, ID No. FT-204, Motor 1HP 1800 RPM 3PH 230-460V, dated 8-08.

## 2.02 SCREW PRESS MATERIALS

A. Anchor bolts and miscellaneous hardware, including bolts, nuts, washers, and fastener clips: Type 316 stainless steel.

B. Screw Press replacement items by FKC:
   1. 3.0 HP motor, NEMA B and gearbox – Suitable for variable speed operation with pulse width modulated constant torque inverter, including top mount motor.
   2. Complete set of new spray covers (top and sides) – 316 SST.
   3. Spherical Roller Bearing 23132C3.
   4. Oil Seal 180x210x16 FUD (Viton).
   5. Oil Seal 170x200x16 FUD (Viton).
   6. Spherical Roller Bearing 23028C3.
   7. Oil Seal 160x190x16 FUE (Viton).
   8. Oil Seal 160x190x16 FUD (Viton).
   9. Oil Seal 120x150x14 FUD (Viton).

## 2.03 FLOCCULATION TANK AND HEAD TANK (EXISTING)

A. Existing flocculation tank and head tank shall be relocated to the Equalization Structure as shown on the Contract Drawings.

B. The following items in the flocculation tank will be replaced:
   1. Motor, gearbox, agitator, shaft and mixer blades, minimum 1 horsepower, 480 volt/3-phase unit.
   2. Level Transmitter per Section 13000 - Instrument and Control System.
   3. Agitator.
   4. Rubber flexible sleeve to fit over existing flocculation tank outlet pipe.

## 2.04 ANCHOR BOLTS

A. Anchor bolts shall be Type 316 stainless steel sized by screw press manufacturer and supplied by the Contractor.

B. Design as specified in Section 01612 - Seismic Design Criteria.

## 2.05 INSTRUMENTATION

A. Replace the existing flocculation tank transmitter per Section 13000 - Instrument and Control System.

B. Modifications to existing screw press control panel: Modify the existing screw press control panel as follows:
   1. Remove existing Automation Direct D2-250 CPU and replace it with upgraded module D2-260 CPU.
   2. Add an ETHERNET module Automation Direct model H2-ECOM100.
   3. Remove existing Mitsubishi VFD for floc mixer and replace it with ABB VFD with rating to suit 1HP mixer at 480V 3-phase. Modify existing wirings to suit new ABB VFD. Program VFD as required.
   4. Remove existing Mitsubishi VFD for screw press and replace it with ABB VFD with rating to suit 3HP screw press at 480V 3-phase. Modify existing wirings to suit new ABB VFD. Program VFD as required.
   5. Furnish and install a backup control panel as detailed on the drawings. This backup control panel duplicates all controls of the HMI for the screw press, and it is mounted on the platform for the District staff to control the system on the platform.

C. Calcon shall be available to assist in the startup and commissioning of the relocated screw press for at least two days during final startup.

D. All of the above work shall be done by Calcon System, Inc., attention Chris Ortega (925) 570-4504 and COrtega@calcon.com.

E. Calcon is the District-exclusive system integrator who has worked in the original screw press installation, and has been responsible for installation and programming of all SCADA PLCs at the plant. Calcon is also an UL 508A approved panel shop manufacturer.

# PART 3 EXECUTION

## 3.01 EXAMINATION

A. Inspect all components for shipping damage, conformance to specifications, and proper torques and tightness of fasteners, as specified in Section 15050 - Common Work Results for Mechanical Equipment.

## 3.02 INSTALLATION

A. Install equipment as indicated on the Drawings and as specified in Section 15050 - Common Work Results for Mechanical Equipment and the manufacturer's written installation instructions.

## 3.03 COMMISSIONING

A. As specified in Division 01.

B. Manufacturer services:
   1. Provide certificates:
      a. Manufacturer's Certificate of Installation and Functionality Compliance.
   2. Manufacturer's Representative onsite field requirements:
      a. Disassembly, Inspection and replacement of parts listed in Section 2.02 and Section 2.03: 1 trip, 4 days onsite minimum.
      b. Reassembly and Recommissioning: 1 trip, 4 days onsite minimum.
      c. Additional trips resulting from failed tests shall be the sole responsibility of the manufacturer.

C. Testing:
   1. Dewatering Screw Press System:
      a. Test witnessing: Witnessed.
      b. Conduct Level 2 General Equipment Performance Test.
      c. Conduct Level 2 Vibration Test.
   2. Electrical Instrumentation and Controls:
      a. Test witnessing: Witnessed.
      b. Conduct testing as specified in Section 13000 - Instrument and Control System and Section 16000 - Requirements for Electrical Work.

END OF SECTION

# SECTION 13000
# INSTRUMENT AND CONTROL SYSTEM

## PART 1 GENERAL

### 1.1 SYSTEM DESCRIPTION

A. This Section gives general requirements for the instrument and control system (I&CS) which includes primary elements and transmitters, analog display and control elements, discrete display and control elements, control panels, and associated devices.

### 1.2 RELATED SECTION

A. Section 13470 PROGRAMMABLE LOGIC CONTROLLER SYSTEM
B. Section 13470A PLC I/O list
C. Division 16 Electrical sections

### 1.3 SUBMITTALS

A. Shop Drawings

Shop drawing submittals shall be neatly arranged in 3-ring binders which may have pockets for full-size drawings folded and CD. Tabs shall be used to separate individual items in the submittal. Loose submittals without a binder shall be rejected without review. Deviations if any from the specifications shall be summarized and tabulated on a separate document pages titled “Notes to Reviewer”. Shop drawings that do not follow the required format shall be rejected without being reviewed.

1. Bill of Materials: List of required I&Cs equipment.

    a. Group equipment items by common enclosure, and equipment type.
    b. Data Included:

        1) Equipment tag number.
        2) Description.
        3) Manufacturer, complete model number and all options not defined by model number.
        4) Quantity supplied.

2. Catalog Cuts: I&CS Components, Electrical Devices, and Mechanical Devices:

    a. Catalog information.
    b. Descriptive literature.
    c. External power and signal connections.
    d. Scaled drawings showing exterior dimensions and locations of all electrical and mechanical interfaces.

3. Component Data Sheets: Data sheets for all I&CS components.

a. Format and Level of Detail in accordance with ISA-S20.
b. Specific features and configuration data for each component:

1) Location or service.
2) Manufacturer and complete model number.
3) Size and scale range.
4) Set points.
5) Materials of construction.
6) Options included.

c. Name, address, and telephone number of manufacturer's local office, representative, distributor, or service facility.

4. Panel Construction Drawings:

a. Scale Drawings: Show location of panel mounted devices, doors, louvers, and subpanels.

b. Panel Legend: List front of panel devices by tag numbers, nameplate inscriptions, service legends, and annunciator inscriptions.

c. Bill of Materials: List devices mounted within panels that are not listed in panel legend. Include tag number, description, manufacturer, and model number.

d. Construction Details: NEMA rating, materials, material thickness, structural stiffeners and brackets, lifting lugs, mounting brackets and tabs, door hinges and latches, and welding and other connection callouts and details.

e. Construction Notes: Finishes, wire color schemes, wire ratings, and wire numbering and labeling scheme.

5. Interconnection Diagrams: For discrete control and power circuits.

a. Diagram Type: Ladder diagrams in a format similar to those shown on Drawings. Include devices requiring electrical connections. Show unique rung numbers on left side of each rung where applicable.

b. Item Identification: Identify each item with attributes listed.

1) Wires: Wire number and color. Cable number if part of multiconductor cable.
2) Terminals: Location (enclosure number, terminal junction box number, or MMC number), terminal strip number, and terminal block number.
3) Discrete Components:

a) Tag number, terminal numbers, and location ("FIELD", enclosure number, or MCC number).

b) Switching action (open or close on rising or falling process variable), set point value and units, and process variable description.

4) Relay Coils:

a) Tag number and its function.
b) On right side of rung where coil is located, list contact location by ladder number and sheet number. Underline normally closed contacts.

5) Relay Contacts: Coil tag number, function, and coil location (ladder number and sheet number).

a) Show each circuit individually. No "typical" diagrams will be allowed.
b) Ground wires and connections.
c) Circuit Names: Show names corresponding to Circuit and Raceway Schedule for circuits entering and leaving a panel. Refer to Division 16, ELECTRICAL.

6. Loop Diagrams: Individual wiring diagram for each analog or pulse frequency loop.

a. Loop diagrams similar to ISA format or one preferred by DISTRICT.

b. Conform to the minimum requirements of ISA S5.4.

c. Under paragraph 5.3 of ISA S5.4, include the information listed under subparagraphs 2, 5, 6 and 9.

d. Drawing Size: Individual 11-inch by 17-inch sheet for three loops maximum. Loop drawings smaller than 11” x 17” will be rejected without review.

e. Divide each loop diagram into areas for field panel, field, terminal junction boxes, control panel and PLC.

f. Show:

1) Terminal numbers, location of DC power supply, and location of common dropping resistors.
2) Switching contacts in analog loops and output contacts of analog devices. Reference specific control diagrams where functions of these contacts are shown.
3) Tabular summary on each diagram:

a) Transmitting Instruments: Output capability.
b) Receiving Instruments: Input impedance.

4) Circuit and raceway schedule.

7. Panel Power Requirements and Heat Dissipation: For control panels tabulate and summarize:

    a. Required voltages, currents, and phases(s).

    b. Maximum heat dissipations Btu per hour.

    c. All calculations.

8. Termination Wiring Diagrams:

    a. Diagrams, device designations, and symbols in accordance with NEMA ICS 250.

    b. Show:

        1) Electrical connections between equipment, consoles, panels, terminal junction boxes, and field mounted components.
        2) Component and panel terminal identification numbers, and external wire and cable numbers.
        3) Circuit names matching Circuit and Raceway Schedules.
        4) Intermediate terminations between field elements and panels for, but not limited to terminal junction boxes and pull boxes.

9. Installation Details: Provide installation details and bill of materials required for the proper installation of AS Components.

10. Spares, expendables, and test equipment.

B. Samples: Color schedule with color samples for control panels.

C. Quality Control Submittals:

1. Testing Related Submittals: In accordance with this Section

2. O&M Manuals:

    a. Refer to paragraph Shop Drawings for the following items:

        1) Bill of Materials.
        2) Catalog Cuts.
        3) Component Data Sheets.
        4) Interconnection Diagrams, one reproducible copy.
        5) Loop Diagrams, one reproducible copy.
        6) Termination Wiring Diagrams, one reproducible copy.

    b. Device O&M manuals for I&CS components, electrical devices, and mechanical devices shall include:

        1) Operations procedures.

2) Installation requirements and procedures.
3) Maintenance requirements and procedures.
4) Troubleshooting procedures.
5) Calibration procedures.
6) Internal schematic and wiring diagrams.
7) ORT Component and Calibration Sheets.
8) List of required test equipment.

c. List of spares and expendables required and recommended.

1.4 DELIVERY, STORAGE, AND HANDLING

A. In accordance with this Section.

1.5 ENVIRONMENTAL REQUIREMENTS

A. Standard Environmental Requirements: Unless otherwise noted, design AS equipment for continuous operation in these environments:

1. Inside (facility buildings):

a. Temperature: 20 to 115 Deg. F.
b. Relative humidity: 10 to 95% non- condensing.
c. NEC classification: Non-hazardous.

2. Outside:

a. Temperature: -32 to 120 Deg. F.
b. Rain
c. Coastal area with salt air environment

B. Furnish and provide I&CS components and panels for continuous operation in its operating environments as shown and located on the Drawings. All equipment shall be suitable and designed for installation as per California Building Code regarding seismic requirements and compliance.

1.6 SEQUENCING AND SCHEDULING

A. In accordance with the DISTRICT general construction schedule.

1.7 MAINTENANCE

A. Spares Parts:

Provide the following spare parts with no additional cost to the DISTRICT. See section 13470 for additional spare parts for PLC system.

| Description | Percent of Each Type and Size Used | No Less Than |
|---|---|---|
| Fuses | 20 | 5 |
| Indicating light bulbs | 20 | 10 |
| Relays | 2 | 2 |
| Terminal Blocks | 10 | 5 |
| Hand Switches | 2 | 2 |

B. Expendables: None

1.8 WARRANTY

A. The Contractor shall provide a written warranty covering the performance, workmanship, and installation of all equipment furnished under this Section for a period of two (2) years. The Contractor shall assume responsibility for all costs incurred in achieving satisfactory performance during the warranty period. Warranties shall be in accordance with these specifications.

## PART 2 PRODUCTS

2.1 TEST EQUIPMENT AND TOOLS

Contractor shall provide the following tool to the DISTRICT for no additional cost.

| Equipment | Quantity | Manufacturer and Model number |
|---|---|---|
| ETHERNET Cable and Network Test Kit | 1 | Fluke Model LIQ-KIT-IE |
| | | |
| | | |

2.2 I&CS COMPONENTS

A. Components for Each Loop: Components for each loop shall be listed in ISA Data Sheets. Furnish all equipment that is necessary to achieve required loop performance.

2.3 NAMEPLATES AND TAGS

A. Panel Nameplates: Enclosure identification located on the enclosure face.

1. Location and Inscription: As shown on panel Drawing.

2. Materials: 16-gauge, Type 316, stainless steel, stamped, mounted with stainless steel screws.

3. Letters: 1/2-inch, unless otherwise noted.

B. Component Nameplates-Panel Face: Component identification located on panel face under or near component.

1. Location and Inscription: As shown on panel Drawing.

2. Materials: Adhesive backed laminated plastic.

3. Letters: 3/16-inch white on black background, unless otherwise noted.

C. Component Nameplates-Back of Panel: Component identification located on or near component inside of enclosure.

1. Inscription: Component tag number.

2. Materials: Adhesive back, laminated plastic.

3. Letters: 3/16-inch white on black background, unless otherwise noted.

D. Service Legends: Component identification nameplate located on face of component.

1. Inscription: As shown on panel Drawing.

2. Materials: Adhesive backed laminated plastic.

3. Letters: 3/16-inch white on black background, unless otherwise noted.

E. Nametags: Component identification for field devices.

1. Inscription: Component tag number.

2. Materials: 16-gauge, 316 stainless steel.

3. Letters: 1/4-inch imposed.

4. Mounting: Affix to component/field instruments with 16- or 18-gauge stainless steel wire or stainless steel screws.

## 2.4 PANEL FABRICATION

A. General:

1. Panels with external dimensions and instruments arrangement as shown on Drawings except as modified in Engineer approved shop drawings.

2. Panel Construction and Interior Wiring: In accordance with the National Electrical Code (NEC), state and local codes, and applicable sections of NEMA, ANSI, UL, and ICECA.

3. Fabricate panels, install instruments, wire, and plumb, all at the ICS subcontractor's factory.

4. All panels shall be UL listed and shall bear UL label stating "LISTED ENCLOSED INDUSTRIAL CONTROL PANELS". (UL508)

5. Electrical Work: In accordance with the applicable requirements of Division 16, ELECTRICAL.

B. Temperature Control:

1. Smaller Panels (that are not freestanding): Size to adequately dissipate heat from equipment mounted inside panel or in panel face.

C. Panel Construction:

1. Materials: Sheet steel unless otherwise shown on Drawings with minimum thickness of 10-gauge. For NEMA 4X, 316 stainless steel shall be used.

2. Panel Fronts:

   a. Fabricated from a single piece of sheet steel unless otherwise shown on Drawings.
   b. No seams or bolt heads visible when viewed from front.
   c. Panel Cutouts: Smoothly finished with rounded edges.
   d. Stiffeners: Steel angle or plate stiffeners or both on back of panel face to prevent panel deflection under instrument loading or operation.

3. Internal Framework:

   a. Provide structural steel for instrument support and panel bracing.
   b. Permit panel lifting without racking or distortion.

4. Lifting rings to allow simple, safe rigging and lifting of panel during installation.

5. Adjacent Panels: Securely bolted together so front faces are parallel.

6. Doors:

   a. Full height, fully gasketed access doors where shown on Drawings.
   b. Key lockable.
   c. Latches: Three-point, Southco Type 44 or equal.
   d. Handles: "D" ring, foldable type.
   e. Hinges: Full length, continuous, piano type, steel hinges with stainless steel pins.
   f. Rear Access Doors: Extend no further than 24 inches beyond panel when opened to 90-degree position.
   g. Front and Side Access Doors: As shown on Drawings.
   h. Provide a latch to hold door at full open position.

D. Non-Freestanding Panel Construction:

1. Based on environmental design requirements required and referenced in Article ENVIRONMENTAL REQUIREMENTS, provide the following:

a. For panels located inside:
   1) Enclosure Type: NEMA 12.
   2) Materials: Steel.
b. For all other panels:
   1) Enclosure Type: NEMA 4X.
   2) Materials: 316 SS.

2. Doors:

   a. Oil resistant gasket sealed with continuous hinge.
   b. Fiberglass lockable quick release latches.

3. Manufacturers:

   a. Hoffman or equal.

F. Control Panel Electrical and control components:

Control panel shall be NEMA 4X 316 stainless steel for outdoor installation and shall be NEMA 12 for indoor locations. Panels shall have the following features:

1. Power Distribution, motor starter within panels:

   a. Feeder Circuits and motor starters:
      1) One or more 120V ac, 60-Hz feeder circuits as shown on Drawings.
      2) Make provisions for feeder circuit and starter conduit entry.
      3) Furnish terminal board for termination of wires.
   b. Power Panel: Furnish main circuit breaker and a circuit breaker on each individual branch circuit distributed from power panel.
      1) Locate to provide clear view of and access to breakers when door is open.
      2) Breaker sizes: Coordinate such that fault in branch circuit will blow only branch fuse but not trip the main breaker.
      3) Breaker and motor starter manufacturers and products:
         a) Refer to Division 16, ELECTRICAL.

2. Signal Distribution:

   a. Within Panels: 4 to 20 mA dc signals (may be distributed as 1 to 5V dc with a precision 250 OHM resistor).
   b. Outside Panels: <u>Isolated</u> 4 to 20 mA dc only.
   c. All signal wiring shall be twisted, shielded pairs, minimum 18 AWG.

3. Signal Switching:

   a. Use dry circuit type relays or switches.
   b. No interruption of 4 to 20 mA loops during switching.
   c. Switching Transients in Associated Signal Circuit:
      1) 4 to 20 mA dc Signals: 0.2 mA, maximum.

2) 1 to 5V dc Signals: 0.05V, maximum.

4. Relays:

a. General:
1) Relay Mounting: Plug-in type socket.
2) Relay Enclosure: Furnish dust cover.
3) Socket Type: Screw terminal interface with wiring.
4) Socket Mounting: Rail.
5) Provide holddown clips.

b. Signal Switching Relay:
1) Type: Dry circuit.
2) Contact Arrangement: 4 Form C contacts.
3) Contact Rating: 0 to 5 amps at 28V dc or 120V ac.
4) Contact Material: Gold or silver.
5) Coil Voltage: As noted or shown.
6) Coil Power: 0.9 watts (dc), 1.2VA (ac).
7) Expected Mechanical Life: 10,000,000 operations.
8) Expected Electrical Life at Rated Load: 100,000 operations.
9) Indication Type: LED indicator lamp.
10) Seal Type: Hermetically sealed case.
11) Manufacturer and Product: Potter and Brumfield; Series KH/KHA, Idec equivalent, or equal.

c. Control Circuit Switching Relay, Nonlatching:
1) Type: Compact general purpose plug-in.
2) Contact Arrangement: 3 Form C contacts.
3) Contact Rating: 10A at 28V dc or 240V ac.
4) Contact Material: Silver cadmium oxide alloy.
5) Coil Voltage: As noted or shown.
6) Coil Power: 1.8 watts (dc), 2.7VA (ac).
7) Expected Mechanical Life: 10,000,000 operations.
8) Expected Electrical Life at Rated Load: 100,000 operations.
9) Indication Type: Neon or LED indicator lamp.
10) Push to test button.
11) Manufacturer and Product: Potter and Brumfield; Series KUP, Idec equivalent, or equal.

d. Control Circuit Switching Relay, Latching:
1) Type: Dual coil mechanical latching relay.
2) Contact Arrangement: 2 Form C contacts.
3) Contact Rating: 10A at 28V dc or 120V ac.
4) Contact Material: Silver cadmium oxide alloy.
5) Coil Voltage: As noted or shown.
6) Coil Power: 2.7 watts (dc), 5.3VA (ac).
7) Expected Mechanical Life: 500,000 operations.
8) Expected Electrical Life at Rated Load: 50,000 operations.
9) Manufacturer and Product: Potter and Brumfield; Series KB/KBP, Idec equivalent, or equal.

e. Not used

f. Signal conditioners:
Signal conditioners shall be manufactured by AGM Electronics, Phoenix Contact, or equal. They shall have the following characteristics:
1) Din rail mounted
2) 24VDC power input or two wire as required by design loop drawings.
3) 4-20mADC input with two identical 4-20mADC outputs or
4) Pulse input with 4-20mADC output or
5) 4-20mADC input with isolated 4-20mADC output

g. Intrinsically safe relays:
These relays shall be suitable for use with 120VAC power input with pilot devices such as float switches located in the classified hazardous locations as defined by NEC Article 500. Each relay shall have two double-pole double throw contacts, each rated for 5 amperes at 240V. These relays shall be manufactured by Consolidated Electric, Gem Sensors, R. Stahl, Inc, or equal.

5. Centralized Power Supplies:

a. Furnish as required where shown on the drawings to power instruments requiring external dc power, including two-wire transmitters and dc relays.

b. Convert 120V ac, 60-Hz power to dc power of appropriate voltage(s) with sufficient voltage regulation and ripple control to assure that instruments being supplied can operate within their required tolerances.

c. Furnish redundant dc power supplies connected in such a way that DC output power is uninterrupted when one power supply is removed or is not delivering the correct output voltage.

d. Provide a contact closure for alarm in case of dc power supply failure.

e. Provide a voltmeter for each power supply.

f. Provide output over voltage and over current protective devices to:

1) Protect instruments from damage due to power supply failure.
2) Protect power supply from damage due to external failure.

g. Enclosures: NEMA 1, (indoor).

h. Mount such that dissipated heat does not adversely affect other components.
Fuses: For each dc supply line to each individual two-wire transmitter.

1) Type: Indicating.
2) Mount so fuses can be easily seen and replaced.

i. Manufacturer and Products: Acopian Redundant Power Packages, Sola equivalent, or equal.

6. Standard Pushbutton Colors and Inscriptions:

a. Use following color code and inscriptions for pushbuttons unless otherwise noted:

| Tag Function | Inscription(s) | Color |
|---|---|---|
| OO | ON<br>OFF | Red<br>Green |
| OC | OPEN<br>CLOSE | Red<br>Green |
| OCA | OPEN<br>CLOSE<br>AUTO | Red<br>Green<br>White |
| OOA | ON<br>OFF<br>AUTO | Green<br>Red<br>White |
| MA | MANUAL<br>AUTO | Yellow<br>White |
| SS | START<br>STOP | Red<br>Green |
| RESET | RESET | Red |
| EMERGENCY STOP | EMERGENCY STOP | Red |
| LOCAL | LOCAL | White |

b. Unused or Noninscribed Buttons: Black.

c. Lettering Color:

1) Black on white and yellow buttons.
2) White on black, red and green buttons.

7. Standard Light Colors and Inscriptions:

a. Use following color code and inscriptions for service legends and lens colors for indicating lights, unless otherwise noted in Instrument List:

| Tag Function | Inscription(s) | Color |
|---|---|---|
| ON | ON | Green |
| OFF | OFF | Red |
| OPEN | OPEN | Red |
| CLOSED | CLOSED | Green |
| LOW | LOW | Green |
| FAIL | FAIL | Red |
| HIGH | HIGH | Red |
| AUTO | AUTO | White |

| | | |
|---|---|---|
| MANUAL | MANUAL | Yellow |
| LOCAL | LOCAL | White |
| REMOTE | REMOTE | Yellow |

b. Lettering Color:

1) Black on white lenses.
2) White on red and green lenses.

2.5 SOURCE QUALITY CONTROL

A. Factory Demonstration Tests: Demonstrate to Engineer that I&CS panel and assemblies included in these tests for conformance to related submittals and requirements specified.

2.6 REQUIRED INSTRUMENTS FURNISHED AND INSTALLED BY CONTRACTOR

2.6.1 PRESSURE INSTRUMENTS

A. Pressure Switches and gauges:

1. General:

a. Function: Monitor differential pressure, and provide contact closure(s) when differential pressure is at the noted set point.
b. Type: Diaphragm actuated.

2. Performance:

a. Set Point: As noted.
1) Adjustable over the full range.
2) Set as noted.

b. Range: The noted set point shall fall between 30 and 70 percent of the range.

c. Set Point Repeatability: Plus or minus 1/2 percent of range span.

3. Features:

a. Diaphragm Materials: Buna-N, unless otherwise noted.
b. Pressure Connection: Nickel-plated brass, unless otherwise noted.

4. Enclosure: NEMA 4X 316 SS, unless otherwise noted.

5. Signal Interface:

a. Contact Type: SPDT, snap action switch, rated for 5 amps at 120V ac.

6. Manufacturers:

a. Ashcroft, B Series.
b. United Electric, Series 300
c Mercoid, Series DP

B. Pressure Transmitter

1. General: Furnish and install transmitter where shown on the drawings.

a. Measure pressure by detecting force on an integral capacitance diaphragm capsule.

2. Performance:

a. Range: 0 to 125 psi, 0 to 10 psi respectively.
b. Provide zero elevation and adjustment.
c. Span shall be adjustable over 100 to 1 or greater range.
d. Adjustable damping shall be provided.
e. Wetted parts shall be 316 SS unless otherwise specified.
f. Accuracy shall be ±0.25% of span.
g. Transmitter housing shall be rated explosion proof, NEMA 7.
h. Integtal LCD meter with the transmitter housing.
i. HART protocol
j. Two-valve SS manifold

3. Signal Interface:

a. Transmitter output: 4-20mA current regulated to drive any load between 0-750 ohms at 24V DC.
b. Transmitter: Two wire type (loop powered)

4. Manufacturers:

a. Rosemount 2051C
b. Foxboro, ABB
c. Equal

2.6.2 FLOW INDICATING TRANSMITTERS

A. Magnetic flow meters

1. General:

a. Measure flow by flange type low frequency electromagnetic element with DC pulse signal proportional to and linear with liquid flow rate.

2. Performance:

a. Range: 4” diameter, 0 to 3700 gpm respectively
b. Sensor: Self-cleaning electrodes
c. Meter housing hardware: NEMA 6 Submergence, epoxy painted

d. Sensor electrode: 316 Stainless Steel, hard rubber liner, grounding rings
e. Accuracy: 0.2% of full rate
f. Electronic transmitter with 4-20maDC output, 3-line, 16-character LCD Display and pulse/frequency for totalization signals. NEMA 4X enclosure, 120VAC input, HART protocol,
g. Environment: 20 to 140 degrees F, humidity 90% non-condensing
h. Hand-held calibrator/programmer (shall be provided at no additional cost)

3. Manufacturers:

a. ABB WaterMaster to match District's Standards.

2.6.3 LEVEL MEASUREMENT

Furnish and install level transmitter where shown on the drawings.

A. Level transmitter (Ultrasonic type)

1. Continuous level measurement by soundwave
2. Characteristics:

a. Ultrasonic probe/sensor with 100 feet cable length
1) Remote level transmitter NEMA 4X with 4-20mADC output
2) Power input 120VAC
3) Local level transmitter, keypad type with engineering unit.
4) HART protocol
5) Ultrasonic level sensor with narrow beam. Sensor is located in
6) hazardous Class 1 Div I locations.
7) Provided with required 316 SS mounting hardware, 316 SS brackets, SS supports, and cables.

3. Manufacturer:

a. Siemens Milltronics HydoRanger with Echomax XPS-15 sensor to match District's Standards.

## PART 3 EXECUTION

3.1 GENERAL

A. Floor plan layout for I&CS components are diagrammatic and not intended to specifically define element locations or piping and tubing run lengths. Base materials and installations on field measurements.

B. Coordinate Work with Division 11, EQUIPMENT and Division 15, MECHANICAL.

C. Wiring: Refer to this Section and Division 16, ELECTRICAL.

3.2 FIELD QUALITY CONTROL

A. Perform functional tests to assure all devices are functional individually prior to system testing.

B. Perform final acceptance testing at the presence of the DISTRICT's representative, the Engineer.

3.3 TRAINING

A. Operation: For DISTRICT's operations personnel on operation of I&CS.

1. Training Session Duration: 1 instructor day.

2. Number of Training Sessions: 2

3. Location: Project site.

4. Content: Conduct training on loop-by-loop basis.

a. Loop Functions: Understanding of loop functions including interlocks for each loop.
b. Loop Operation: For example, adjusting process variable set points, AUTO/MANUAL control transfer, AUTO and MANUAL control, annunciator acknowledgement and resetting.
c. Interfaces with ICS Subsystems.

B. Maintenance Training:

1. Training Session Duration: 1 instructor day.

2. Number of Training Sessions: 2

3. Location: Project site.

4. Content: Provide training for each type of component and function provided.

a. Loop Functions: Understanding details of each loop and how they function.
b. Component calibration.
c. Adjustments: For example, device setup parameters, controller tuning constants, current switch trip points, and similar items.
d. Troubleshooting and diagnosis for and components.
e. Replacing lamps, chart paper, fuses.
f. AS components removal and replacement.
g. Periodic maintenance.

END OF SECTION

# SECTION 13470
# SCADA - PROGRAMMABLE LOGIC CONTROLLER SYSTEM

## PART 1 – GENERAL

1.1 DESCRIPTION

A. Scope:

1. General:

a. The Contractor shall furnish, install and wire all SCADA system hardware required for this project. In this project, the existing screw press control panel shall be disconnected, modified, enhanced and relocated to a new location as shown on the plans. The existing signals and new signals shall be connected to the relocated screw press control panel. See specification section 11384 for required modifications and enhancements of the existing screw press control panel. The local PLC and its local HMIs for the screw press control panel shall be programmed and configured to accommodate its control functions properly as specified.

b. In addition, here are two new instrumentation panels required: Backup Control Panel and the Communication Control Panel both of which are as detailed on the drawings. Fiber patch panels as detailed in this section shall also be furnished and installed by the Contractor.

2. Control System Responsibilities:

a. The Contractor shall be responsible for all control systems work described in these specifications and drawings, including PLCs, network/communication equipment, except for SCADA HMI programming and configuration services explicitly specified to be provided by the District . The Contractor shall be responsible for all submittals, purchasing, assembly, packing, shipping, installation, set up, startup, specified testing, and as-built drawings for all control system equipment and purchased standard software.

b. The Contractor or subcontractor shall test the PLC/I/O system as specified herein to verify proper performance independent of the use of the SCADA HMI software provided by the District.

c. The Contractor shall provide the communications network as specified herein and indicated on the Drawings and other sections of the specification.

d. Perform testing and training as described in this section.

3. Definitions:

a. Where a term is used in this section relating to instrumentation, and the meaning is not defined therein or elsewhere in the Contract Documents, the meaning of the term shall be as defined in ISA S51.1 Process Instrumentation Terminology, or if not contained in ISA 51.1, as defined in listed reference standards under “References”.

b. CEET - Complete End to End Testing.

c. Control Circuit: Any logical circuit (operating usually at 120VAC or less or DC) whose principal purpose is the conveyance of control and interlock/protection

information and not the conveyance of energy for the operation of an electrically powered device.

d. HMI: Human Machine Interface.

e. LAN: Local Area Network e.g. Ethernet is a local area network based on IEEE standard 802.3 with TCP/IP protocol.

f. NAT - Network Acceptance Testing.

g. Panel: An instrument support system which may be either a flat surface, a partial enclosure, or a complete enclosure for instruments and other devices used in process control systems. Unless otherwise specified or clearly indicated by the context, the term “panel” in these Contract Documents shall be interpreted as a general term, which includes flat panels, enclosures, cabinets and consoles.

h. PLC: Programmable Logic Controller.

i. Power Circuit: Any circuit operating at 120 VAC or more, whose principal purpose is the conveyance of power for motors, lighting and other power devices.

B. Test:

1. General:

a. Any testing or startup activity that requires the participation of the District shall be scheduled by the Contractor through written notification to the District. Contractor shall provide regularly updated testing and startup schedules to the District. In addition to any other form of notification, Contractor shall notify the District by email, or other mutually agreed upon means, five working days immediately prior to any testing or other activity requiring the participation of the District. Failure to properly notify District shall result in rescheduling of test activity, solely at Contractor expense and without an extension to the project completion schedule.

2. Operational Readiness Tests (ORT):

a. General: Prior to startup and the Functional Acceptance Test, the entire system shall be certified (inspected, tested and documented) that it is ready for operation.

b. Basic End-to-End Testing (BEET):

i. For each and every analog and discrete circuit, perform Basic End-to-End Testing (BEET). This includes, but is not limited to, all local control panels, MCCs, VFDs, and hardwired circuits in control panels.

ii. For each input, activate the signal at the primary field device, either by creating necessary process and equipment conditions or by disconnecting the wires at the field device and simulating the input signal. At the PLC, using the PLC programming software, verify proper receipt of the signal.

iii. For each output signal from the PLC, activate the PLC output signal using the PLC programming software, and verify proper receipt of the signal at the controlled device in the field, either by observing equipment operation or by disconnecting the wires at the equipment and verifying proper receipt of the signal.

iv. Verify proper signal receipt at all intermediate devices, such as indicators, signal trip and relay modules, etc.

v. The Loop/Component Inspections and Tests shall be implemented using District-approved forms and checklists.

vi. Each loop shall have a Loop Status Report to organize and track its inspection, adjustment and calibration. These reports shall include the following information and check off items with spaces for sign off by the system supplier:

a). Project Name.

b). Loop Number.

c). Tag Number for each component.

d). Check offs/signoffs for each component.

e). Tag/identification.

f). Installation.

g). Termination - wiring.

h). Termination - tubing.

i). Calibration/adjustment.

j). Signoffs/signoffs for the loop.

k). Panel interface terminations.

l). I/O interface terminations.

m). I/O signal operation.

n). Inputs/outputs operational: received/sent, processed, adjusted.

o). Total loop operation.

p). Space for comments.

q). Each active Analog Subsystem element and each I/O module shall have a Component Calibration Sheet. These sheets shall have the following information, spaces for data entry and a space for sign off by the system supplier:

1). Project Name.

2). Loop Number.

3). Component Tag Number of I/O Module Number.

4). Component Code Number Analog System.

5). Manufacturer (for Analog system element).

6). Model Number/Serial Number (for Analog system).

7). Summary of Functional Requirements. For example:

(a). For Indicators and Recorders: Scale and chart ranges

(b). For Transmitters/Converters: Scale and chart ranges

(c). For Computing Elements: Function

(d). For Controllers: Action (direct/reverse) control modes (PID)

(e). For Switching Elements: Unit range, differential (FIXED/ADJUSTABLE), reset (AUTO/MANUAL)

(f). For I/O Modules: Input or output

r). Calibrations; for example:

1). For Analog Devices: Required and actual inputs and outputs at 0, 25, 50, 75 and 100 percent of span, rising and falling.

2). For Discrete Devices: Required and actual trip points and reset points.

3). For Controllers: Mode settings (PID).

4). For I/O Modules: Required and actual inputs or outputs for 0, 10, 25, 50, 75 and 100 percent of span, rising and falling; 9 points calibration (5 points calibration will be rejected).

5). Space for comments.

6). Space for sign off by the ISS.

7). The ISS shall maintain the Loop Status Reports and Components Calibration sheets at the job site and make them available to the Construction Administrator/District at any time.

s). These inspections and tests do not require witnessing. However, the Construction Administrator will review and initial all Loop Status Sheets and Component Calibration Sheets and spot-check their entries periodically and upon completion of the Operational Readiness Tests. Any deficiencies found shall be corrected.

c. Complete End-to-End Acceptance Tests (CEET):

i. For each PLC, CEET testing shall not commence until all Loop Acceptance Tests for the PLC have been satisfactorily completed, and all test results (including all forms signed off) have been submitted for review and accepted. For each and every analog and discrete circuit, perform an end-to-end test between the field device and the HMI computer operator station, and including all intermediate readouts. Also test each signal circuit transmitted over digital networks (i.e. ETHERNET, RS-422 links, etc.).

ii. In general, the end-to-end testing is a two or more person test. The Contractor shall provide personnel to operate equipment or simulate signals that are to be verified as part of this test.

iii. Check each loop from the field element to the respective computer control display. Include all intermediate field instruments, control devices, panels, indicators and other devices in the loop to ensure proper operation and linkage to computer control station displays.

iv. Analog signals shall be tested at 0, 50, and 100 percent of scale to verify the proper receipt on computer control displays.

v. Discrete input circuits shall be tested to verify proper state when the field device is switched between states. Discrete output circuits shall be tested to verify equipment responds properly (start, stop, etc.).

vi. Contractor shall provide adequate time in the Construction Schedule for CEET testing.

3. FUNCTIONAL ACCEPTANCE TEST (FAT)

a. Prior to startup and the Functional Acceptance Test (FAT), the entire installed instrument and control system shall be certified that it is ready for operation. All preliminary testing, inspection, and calibration shall be complete as defined in the Operational Readiness Tests.

b. Once the facility has been started up and is operating, a witnessed FAT shall be performed on the complete system to demonstrate that it is operating and in compliance with these Specifications. Each specified function shall be demonstrated on a paragraph-by-paragraph, loop-by-loop, and site-by-site basis.

c. Strategy Field Testing (SFT):

i. This test shall be performed by the Integrator with the assistance and cooperation of the Contractor. The Contractor shall provide a qualified start-up and testing representative on-site, assisting and participating in the testing full-time, for the duration of the SFT.

ii. The Contractor shall include in the Construction Schedule at least two days of SFT testing work for each of the control strategies and shall provide staff for these periods, as required above for this work.

iii. For each control strategy and for each electrical schematic diagram, demonstrate the proper operation of all hardware and software logic and control functions. Perform a step by step test of each function described in each control strategy.

iv. Perform separate tests on each individual piece of equipment, and for each control loop.

v. Perform the proper operation of each discrete control loop to ensure the proper operation of motors, hand switches, interlocks, solenoid valves, other auxiliary devices, status lights, computer control operator interfaces, and alarms.

vi. Updated versions of the documentation specified to be provided for during the Factory Tests shall be made available at the job site both before and during the tests. In addition, one copy of all O&M Manuals shall be made available at the job site both before and during testing.

vii. The system shall operate for a continuous 96 hours without failure before this test will be considered successful.

## 1.2 RELATED SECTIONS

A. Section 11384 Dewatering Screw Press System

B. Section 13490 Fiber Optic System

C. Division 16 Electrical Sections

## 1.3 QUALITY ASSURANCE

A. References:

1. Work specified in this Section shall follow the applicable code and standards: EIA, ANSI, IEEE, ISA and NFPA.
2. Where provisions of the pertinent codes and regulations, requirements of the referenced standards, or these specifications conflict, the more stringent of the requirements shall govern.

1.4 SUBMITTALS

A. General:

1. Make all submittals and resubmittals in strict accordance with the provisions of Division 1, Section 1A-7 - Submittals, Manuals, Operating Instructions, and Affidavits.
2. Make all submittals listed in Part 1.03-B, and any others required to fully describe what is to be furnished and/or installed under this Section.

B. Required Submittals:

1. Drawing index and detail part list.
2. System configuration diagram.
3. Hardware list and cutsheets.
4. Bill of materials.
5. Test plan.

## PART 2 – PRODUCTS

2.1 MANUFACTURER AND SUPPLIER

A. The PLC shall be manufactured by Automation Direct DL4 Series to match the District SCADA Standards. No other manufacturers are acceptable. The PLC and its auxiliaries shall be integrated in an enclosure as shown and detailed on the drawings. This integration shall be done and coordinated by Calcon. Contractor shall provide complete wiring from the field to the I/O cards' terminals as detailed on the drawings. The PLC and its auxiliaries shall be as shown on the Drawings and as specified in this section:

B. Provide and install the following additional hardware to the PLC as shown on the drawings and as described in this section for modifications to existing Screw Press Control panel:

1. Main CPU model no. D2-260
2. One ETHERNET communication card model no. H2-ECOM
3. One 16 point digital input card D2-16ND3-2
4. 8-slot base configuration
5. Backup Control panel (NEMA 4X) consisting the following devices:

a. HMI Automation Direct C-more 12-in TFT color catalog no. CM5-T12W, 24VDC

b. Emergency Stop Station (Mushroom type)

C. Provide and install Communication Control Panel with characteristics as follows:

1. 1500VA UPS with 10 min capacity battery. UPS shall be manufactured by APC, Eaton, or equal.
2. Managed ETHERNET Switch with fiber (two ports) and (8 ports) copper connections. This switch shall be Redlion catalog number 7012FX2, or equal.
3. Fiberoptic din rail mounted patch panel for six duplex SC connector type. Panel panels shall be manufactured by OCC.
4. UL listed 508A panel

D. Provide and install the following equipment in the Control Building as follows:

1. A fiber patch panel in the existing fiber rack of the server room.
2. A fiber patch panel in the existing main PLC room.

## PART 3 – EXECUTION

### 3.1 ACCEPTANCE TESTING

A. Perform final acceptance testing with the presence of the District and the District's representative. Demonstrate all correct signal wirings and control logics to the District's satisfaction. (The Screw Press PLC programming is existing and shall be modified as required). Retest shall be performed at no cost to the District if the first test is not satisfactory.

B. Complete and test the fiber network to verify PLC communication with SCADA system.

### 3.2 TRAINING

A. Provide two 4-hour training sessions for 3 plant personnel at the site. The training shall include classroom and hands-on practice of the system furnished.

B. Perform factory tests in the District's presence. Notify the District one week prior to actual scheduled factory test. See Part 1 for additional requirements.

### 3.3 SCADA HMI SOFTWARE TESTING ASSISTANCE

A. The SCADA HMI application software is provided by a third party (Calcon) hired by the District. However, the Contractor shall provide assistance to this third party when they perform software testing in the field during final pump station startup operations. Provide field staff for at least two weeks to assist this effort. See Part 1 for additional requirements.

## 3.4 CONTROL STRATEGIES

Since the existing screw press is to be moved to a new location with other equipment also being relocated as well and thus the control strategies for the system have not been changed substantially. The backup panel shall have identical functions as the panel-mounted HMI. No new PLC control logic programming is required except modifications to include new points where shown on the drawings.

END OF SECTION

# SMCSD - SCREW PRESS RELOCATION PROJECT
## PLC "SP" I/O LIST



| ITEM No. | EQUIPTMENT or DEVICE DESCRIPTION | EQUIPT. NO. | FUNCTION NAME | LOOP No. | SIGNAL FUNCTION | TYPE | SLOT /CARD | TERMINAL NUMBERS |
|---|---|---|---|---|---|---|---|---|
| | | | | | | | | |
| 1 | Secondary Digester | PIT-801 | PI | 801 | Pressure Indication | AI | 1 | 701+ & 703 CH 1 |
| 2 | Digested Sludge Feed Pump | P-910 | SI | 910 | Speed Indication | AI | 1 | 705 via 506&507 CH 2 |
| 3 | Digested Sludge | FIT-912 | FI | 912 | Flow Indication | AI | 1 | 707 CH 3 |
| 4 | Polymer Feed Pump | POL-911 | SI | 911 | Speed Indication | AI | 1 | 709 CH 4 |
| 5 | Flocculation Mixer | SIT-913 | SI | 913 | Speed Indication | AI | 1 | 711 CH 5 |
| 6 | Screw Press Head Box | LIT-910 | LI | 910 | Level Indication | AI | 1 | 701+ & 713 CH 6 |
| 7 | Screw Press | ME-915 | SI | 915 | Speed Indication | AI | 1 | 715 CH 7 |
| 8 | Secondary Digester | LIT-01 | LI | 01 | Level Indication | AI | 1 | 717 via 615&616 CH 8 |
| | | | | | | | | |
| 9 | Digested Sludge Feed Pump | P-910 | SIC | 910 | Speed Command | AO | 2 | 805 & 415- CH 1 |
| 10 | Polymer Feed Pump | POL-911 | SIC | 911 | Speed Command | AO | 2 | 805 & 415- CH 2 |
| 11 | Flocculation Mixer | MXR-913 | SIC | 913 | Speed Command | AO | 2 | 805 & 415- CH 3 |
| 12 | Screw Press | ME-915 | SIC | 915 | Speed Command | AO | 2 | 805 & 415- CH 4 |
| 13 | SPARE | | | | | AO | 2 | |
| 14 | SPARE | | | | | AO | 2 | |
| 15 | SPARE | | | | | AO | 2 | |
| 16 | SPARE | | | | | AO | 2 | |
| | | | | | | | | |
| 17 | Sludge Feed Valve | ZS-921 | ZSH | 921 | Open Status | DI | 3 | 903+ & 903 CH 1 |
| 18 | Sludge Feed Valve | ZS-921 | ZSL | 921 | Closed Status | DI | 3 | 903+ & 904 CH 2 |
| 19 | Digested Sludge Feed Pump | P-910 | YL | 910 | Run Status | DI | 3 | 903+ & 905 CH 3 |
| 20 | Digested Sludge Feed Pump | P-910 | YA | 910 | Fail Status | DI | 3 | 903+ & 906 CH 4 |
| 21 | Digested Sludge Feed Pump | P-910 | REM | 910 | In Remote Mode | DI | 3 | 903+ & 907 CH 5 |
| 22 | Polymer Feed Pump | POL-911 | YL | 911 | Run Status | DI | 3 | 903+ & 908 CH 6 |
| 23 | Polymer Feed Pump | POL-911 | YA | 911 | Fail Status | DI | 3 | 903+ & 909 CH 7 |
| 24 | Polymer Feed Pump | POL-911 | REM | 911 | In Remote Mode | DI | 3 | 903+ & 910 CH 8 |
| 25 | Flocculation Mixer | MXR-913 | HS | 913 | E-Stop Status | DI | 3 | 911+ & 911 CH 9 |
| 26 | Flocculation Mixer | MXR-913 | HS | 913 | In Auto | DI | 3 | 911+ & 912 CH 10 |
| 27 | Flocculation Mixer | MXR-913 | YL | 913 | Run Status | DI | 3 | 911+ & 913 CH 11 |
| 28 | Flocculation Mixer | MXR-913 | YA | 913 | Fail Status | DI | 3 | 911+ & 914 CH 12 |
| 29 | Screw Press | ME-915 | HS | 915 | E-Stop Status | DI | 3 | 911+ & 915 CH 13 |
| 30 | Screw Press | ME-915 | HS | 915 | In Auto | DI | 3 | 911+ & 916 CH 14 |
| 31 | Screw Press | ME-915 | YL | 915 | Run Status | DI | 3 | 911+ & 917 CH 15 |
| 32 | Screw Press | ME-915 | YA | 915 | Fail Status | DI | 3 | 911+ & 918 CH 16 |
| | | | | | | | | |
| 33 | Digested Sludge Feed Pump | P-910 | PS | 801 | Press Shut Down | DO | 4 | 923 & 924A |
| 34 | Digested Sludge Feed Pump | P-910 | HS | 910 | Run Command | DO | 4 | 925 & 925A |
| 35 | Polymer Feed Pump | POL-911 | HS | 911 | Run Command | DO | 4 | 927 & 927A |
| 36 | Flocculation Mixer | MXR-913 | HS | 913 | Run Command | DO | 4 | 328 & 329 |
| 37 | Screw Press | ME-915 | HS | 915 | Run Command | DO | 4 | 228 & 229 |
| 38 | Control Panel | LCP | YA | 933 | Common Alarm | DO | 4 | L130 & 933A |
| 39 | Solenoid Valve 1 | SOV-916 | HS | 916 | Open Command | DO | 4 | 935A & N130 |
| 40 | Solenoid Valve 2 | SOV-917 | HS | 917 | Open Command | DO | 4 | 937 & N130 |
| | | | | | | | | |
| 41 | COMM Panel UPS | UPS-1 | YL | 940 | Run | DI | 5 | New Terminal |
| 42 | COMM Panel UPS | UPS-1 | YA | 940 | Fail | DI | 5 | New Terminal |
| | | | | | | | | |
| 43 | Screw Press PLC | Comm | | | SCADA Network | | 6 | ETHERNET Card |
| | | | | | | | | |

| ITEM No. | EQUIPTMENT or DEVICE DESCRIPTION | EQUIPT. NO. | FUNCTION NAME | LOOP No. | SIGNAL FUNCTION | TYPE | SLOT /CARD | TERMINAL NUMBERS |
|---|---|---|---|---|---|---|---|---|

DI : Discrete Input
DO : Discrete Output
AI : Analog Input
AO : Analog Output

# SECTION 13490

# FIBER OPTIC SYSTEM

## PART 1 - GENERAL

1.01 DESCRIPTION

A. This Section covers the requirements for providing all material, equipment fabrication, installation, calibration, testing, commissioning, and documentation of the Fiber Optic System.

1.02 SCOPE OF WORK

A. The Work of this Section includes providing a fiber optic conduit system, which includes the multimode fiber optic cable, connectors, splices, pull boxes, fiber accessories, and conduit.

1.03 CODES AND STANDARDS

A. All work performed and all material furnished shall conform to the applicable publications and standards of the organizations listed below. Latest edition and revisions shall be used as of the date of these Technical Specifications:

1. American Society for Testing and Materials (ASTM).

2. Electronic Industries Alliance/Telecommunications Industry Association (EIA/TIA).

3. National Electrical Manufacturer's Association (NEMA).

4. National Fire Protection Association (NFPA).

5. Underwriters' Laboratories (UL).

1.04 QUALIFICATIONS

A. All work specified under this Section shall be furnished and installed by a firm with at least ten successful installations of multimode fiber optic cable systems larger or comparable to this project.

B. The fiber optic cable installer shall be ETA Certified Fiber Optic Cable Technician (equivalent certification will be considered in a case by case basis, determined by the Owner) and shall be proficient in fiber optic splicing and termination and shall have a minimum of two years experience performing such work within the past three years.

C. The installation of the fiber optic system shall be under the supervision of a person having a minimum of 10 successful installation of multimode fiber optic cable, shall have construction experience, and testing fiber optic systems within the past 5 years.

1.05 RELATED SECTIONS

A. Section 13470 - SCADA PLC System.

1.06 SUBMITTALS

A. General:

1. Format: Orderly, indexed with labeled tab dividers.

2. In accordance with Section 01330 – Submittal Procedures.

B. Shop Drawings:

1. General:

a. Format: Orderly, indexed with labeled tab dividers.
b. Submittal Format and Requirements: In accordance with Section 01330.
c. Shop drawings: Full scaled details, wiring diagrams, catalog cuts, and descriptive literature of all material to be provided.
d. Identify proposed items and options, installed spares, and other provisions for future work (e.g., reserved panel space; unused components, wiring and terminals).
e. Legends and abbreviation: Submit complete definitions of symbols and abbreviations used.
f. Drawings shall indicate exact conduit routings, indicating all pull boxes, conduit sizes, conduit bend radius and all necessary conduit related items.

C. Fiber Optic Cable Installer and Splicer Qualifications. Provide references and indicate that the installer meets all requirements indicated in Paragraph 1.04.

D. Fiber Optic Manufacturer Instructions.

E. Fiber Optic Field Test Plan.

1.07 QUALITY ASSURANCE

A. Fiber Optic System:

1. Provide drawings for the fiber optic cable and pathway system. Provide single line schematic details of the fiber optic and pathway media, and associated construction materials, including physical locations of all underground conduits, pull boxes, handholes, ductbanks, cable markers, and related hardware.

B. Fiber Optic Cable Installer and Splicer Qualifications:

1. Technicians installing FO media, splices and performing system tests shall be certified and trained as indicated in Paragraph 1.04. Submit Fiber Optic technician qualifications for approval 30 days before any work are to be made

on the cable. Certification shall include, but not limited to, the training, and experience of the individual on specific type and classification of fiber optic media to be provided under this contract.

C. Fiber Optic Field Tests Plan:

1. Prepare and provide technicians and test equipment for field tests of fiber optic media. Conduct OTDR reel tests at the job site prior to installation. Perform OTDR and end-to-end tests of all installed media. Conduct tests on multimode fiber in accordance with EIA TIA/EIA-526-14A for multi-mode fiber.

D. Manufacturer shall provide 25 years warranty on the fiber cables.

## PART 2 - PRODUCTS

### 2.01 GENERAL

A. Materials and fiber optic system material shall be the standard products of a single manufacturer regularly engaged in the manufacturer of such products and shall be the manufacturer's standard commercially available product.

B. Fiber optic media shall meet all performance requirements of TIA-568-C.3, Optical Fiber Cabling Components Standard.

C. TIA-568.1-D, Commercial Building Telecommunications Cabling Standard

D. TIA-606-B, Administration Standard for Telecommunications Infrastructure

E. All transmission media, including but not limited to fiber optic cable, connectors, shall include a manufacturer’s 25-year extended product warranty.

### 2.02 FIBER OPTIC CABLE

A. Fiber Optic Media Type: Indoor/Outdoor Tight Buffered Plenum Rated Multimode.

B. Fiber Count: 12

C. Media Optic Characteristics:

1. Fiber core diameter: 62.5/125 micron

2. Wavelength (nm) 850/1310

3. Maximum Cabled Attenuation (dB/km) 3.5/1.5

4. Secondary Buffer Diameter (µm) 900

5. Max Tensile Load 2,700 N (600 lbs.) 900 N (200 lbs.)

6. Flame Retardancy UL Listed Type OFNP (ANSI/NFPA 262) and FT6 (CSA C22.2 No. 232)

7. Jacket Color Orange or Yellow

8. Impact Resistance, EIA/TIA-455-25A

9. Crush Resistance, TIA/EIA-455-41A

10. Operating Temperature -40°C to +85°C

11. Storage Temperature -40°C to +85°C

12. Installation Temperature (Actual temp. of cable) 0°C to +60°C

D. Fiber Optic Cable shall be Optical Cable Corp (OCC) Catalog No. DX012KWLS90P, Corning, Commscope, or equal.

2.03 FIBER-OPTIC CONNECTORS

A. Fiber-optic connectors shall be the LC Duplex type, push-pull hardware style, and field installable, self-aligning and centering. Fiber-optic connectors shall match the fiber core and cladding diameters. The connector shall have a short boot for strain relief. Fiber-optic equipment and cable shall use the same type connectors for correct mating. Connector insertion loss shall not exceed 0.2dB. Connectors must be capable of mounting on either 0.9 mm buffered fiber or 3.0 mm cordage. The connector shall be LC Duplex Mode Fiber-Optic Connector.

2.04 FIBER PATCH CORDS

A. Fiber patch cords shall consist of buffered, graded-index fiber with a 9 µm core and a 125 µm cladding consistent with all fiber properties required under Paragraph 2.02. The fiber cladding shall be covered by aramid yarn and a jacket of flame-retardant, low smoke material. Duplex fiber jumpers/patch cords with a factory installed connectors and a tension rating of 888 N (200-pound) on the cordage shall be provided. Cable retention shall be 220 N (50-pound) minimum, and connection repeatability shall yield 0.20 dB maximum change per 500 reconnects with connectors attached. Factory produced patch cords shall be of cordage sized at 3.0 mm and utilize connectors that provide a pull-proof non-optical disconnect feature. The patch cords shall be OCC Multimode to match with the specified cables.

2.05 FIBEROPTIC ENCLOSURES

A. The fiber optic enclosures shall be din-rail mounted with hinged door for multimode fiber cables for the PLC network shall be manufactured by OCC Catalog No. DCT2AP-6, Commscope, or equal.

2.06 FIBEROPTIC PATCH PANELS

A. Patch panels in the electrical room and in the existing plant's building shall be Leviton Opt-X 1000i SDX patch panels with slide out tray. For wall mounted unit, the patch panel shall be Leviton Medium SDX Wall mounted fiber enclosure. All fiber in Leviton patch panels shall be terminated using Opt-X SDX Cassettes.

## PART 3 - EXECUTION

### 3.01 CONDUIT INSTALLATION

A. General

1. Conduit sections shall be installed in accordance with Section 16000. All joints shall be watertight.

2. All conduits shall be cleaned and tested prior to installation of cables.

3. Contractor shall install pull rope in the conduit.

4. Conduits entering pull boxes shall be sealed with Jackmoon Simplex duct plugs.

5. The conduit shall gradually and smoothly slope up to the elevation of the pull box entrance. Use of manufactured bends shall be limited to an absolute minimum. Factory bends, if required, shall be no more than 22½ degrees. Minimum radius for the conduit shall be 4 feet. No condulets are allowed.

6. Tags for the fiber cable shall be engraved stainless steel tag fastened to cable with non corrosive cable ties.

### 3.02 FIBER OPTIC CABLE INSTALLATION

A. General:

1. The Contractor shall determine a suitable cable installation method to ensure that all cable installation requirements shall be met in all conduit sections. All work shall be carried out in accordance and consistent with the highest standards of quality and craftsmanship in the communication industry with regard to the electrical and mechanical integrity of the connections; the finished appearance of the installation; as well as the accuracy and completeness of the documentation.

2. Fiber optic cables shall be installed from node to node i.e. PLC control panel to the next location in continuous lengths without intermediate splices throughout the project. Cable installation personnel shall be familiar with the manufacturer's recommended procedures including, but not limited to the following:

    a. Proper attachment to the cable strength elements for pulling during installation. Depending on cable design, this will involve direct

attachment to internal strength members or attaching an external "Kellums" or split mesh grip using a 600 lb breakaway swivel.

b. Cable tensile limitations and tension monitoring procedures.
c. Cable bending radius limitations.
d. Cable twisting limitations.
e. It is preferred that all fiber cables be pulled with hand power only. Mechanical pull only allowed with consent of the Owner and the Engineer.

B. Cable Protection During Installation:

1. All fiber optic cables shall be pulled in conduit. Care shall be exercised during cable pulls through conduit bends and looping in pull boxes. For cable to be installed in occupied conduit, lubricated fish tape shall be used.

2. The Contractor shall comply with the cable manufacturer's recommended installation procedures at all times. Cable installation procedures shall conform to OCC MDIS Installation guidelines.

3. To reduce the possibility of damage to the outer jacket of the fiber optic cable, protective measures shall be used when the cable is installed. The requirements herein shall be followed, but does not limit the installation to only those identified. The purpose of the installation specifications is to ensure protection of the fiber optic cable when it is installed. Other protective measures not specified herein may be taken during installation if it will ensure protection of the cable.

4. Precautions shall be taken during installation to prevent the cable from being kinked, crushed or twisted. A pulling eye shall be attached to the cable end and be used to pull the cable through the duct and conduit system. As the cable is pulled off the reel and into the cable feeder guide, it shall be lubricated with a lubricant that shall be of the water- based type and approved by the cable manufacturer.

5. Crushed or kinked cable shall be replaced with new cable.

C. Lubrication: As the cable is pulled into the conduit system, it shall be sufficiently lubricated with a lubricant that shall be the water-based type and approved by the cable manufacturer. Lubricant shall be applied at a rate to provide a continuous 10-mil coating, as recommended by the manufacturer. Lubricant shall be Polywater F® manufactured by American Polywater.

D. To accommodate long continuous installation lengths, bi-directional "center pull" techniques for pulling of the fiber optic cable is acceptable and shall be implemented as follows:

1. From the midpoint, pull the fiber optic cable into the conduit from the shipping reel in accordance with the manufacturer's specifications.

2. When this portion of the pull is complete, the remainder of the cable must be removed from the reel to make the inside end available for pulling in the opposite direction.

3. This is accomplished by hand pulling the cable from the reel and laying into large "figure eight" loops on the ground cover with a plastic sheet.

4. The purpose of the figure eight pattern is to avoid cable tangling and kinking.

5. The loops shall be laid carefully one upon the other (to prevent subsequent tangling) and shall be in a protected area.

6. The inside reel end of the cable is then available for installation.

7. In some cases, it may be necessary to set up a winch at an intermediate cable vault. (If vaults are provided)

8. The required length of cable shall be pulled to that point, and brought out of the cable vault and coiled into a figure eight.

9. The figure eight is then turned over to gain access to the free cable end. This can then be reinserted into the duct system for installation into the next section.

E. Under no conditions shall the fiber optic cable be left exposed or unattended.

F. Repair of cable jacket shall not be permitted. Jacket damage shall require removal and re-installation of a new cable run at the Contractor’s expense.

G. Splicing of fiber optic cable is not permitted. If cable is damaged, the cable shall be removed and new cable shall be installed at no cost to the Owner.

H. Minimum 5 service loops in manholes.

I. 25 feet of slack at cable terminations.

## 3.03 PULLBOXES

A. Field Location of Pull boxes

1. The drawings diagrammatically indicate the desired location of pull boxes, conduit runs and other items. Exact locations shall be determined by the Contractor based on physical size and arrangement of equipment, finished elevations, calculated cable pulling tensions, field obstructions.

2. Field verification of the conduit routings is required prior to execution of the work.

## 3.04 CONDUIT SYSTEM CLEANING AND TESTING

A. Conduit shall be tested for leakage by air testing at 5 psi, maintaining the pressure for one hour without showing any leakage.

B. The Contractor shall remove and replace conduit which fails either test and shall repeat the test.

3.05 FIBER OPTIC CABLE TESTING

A. General: The Contractor shall perform pre-installation and post-installation fiber optic cable tests. The Owner Representative shall be notified a minimum of 15 days in advance so that these tests are witnessed. All test equipment shall be traceable to NIST standards (National Institute of Standards and Technology).

B. Test equipment: The Contractor shall use the following to perform pre-installation and post-installation for the fiber optic cable tests:

1. Optical Time Domain Reflectometer (OTDR): The OTDR shall be laser precision, portable, latest model by Agilent Technologies.

C. Installation Tests: After fiber optic cable has been installed the following tests shall be performed:

1. A recording OTDR shall be used to test for end-to-end continuity and attenuation of each optical fiber. The OTDR shall be equipped with a 850 nm and 1300 nm light source for the multimode fiber (MM). The OTDR shall have an X-Y plotter to provide a hard copy record of each trace of each fiber. The OTDR shall be equipped with sufficient internal masking to allow the entire cable section to be tested. This may be achieved by using an optical fiber pigtail of 30 feet or more to display the required cable section.

2. The maximum permissible end-to-end loss shall be 0.5dB/km. The Contractor shall replace any cable in which any fiber does not meet this requirement.

3. The OTDR shall be calibrated for the correct index of refraction to provide proper length measurement for the known length of reference fiber.

4. A transmission test shall be performed with the use of a 850 and 1300 nm stabilized light sources and 1310 nm/1550 nm power meters for Single Mode. This test shall be conducted in both directions on each fiber of each cable.

5. Hard and electronic copy of test documentation shall be submitted to the Owner Representative. The documentation shall include the trace plot, index, dB/km loss, cable length, date and time of test, wavelength, pulse width, the test site, cable ID, fiber number and type, and operator's initials. The Contractor shall compare the pre-installation test results to the post-installation results. If a deviation of greater than one dB occurs, the Owner Representative shall be notified in writing by the Contractor, and the cable shall be removed and replaced at no additional cost to the Owner.

6. Upon completion of the previous tests all fiber optic cable coils shall be secured with ends capped to prevent intrusion of dirt and water.

3.06 RECORD DRAWINGS

A. In compliance with Division 1 specifications, the Contractor shall, upon completing the construction of the fiber optic system, submit to the Owner Record Drawings showing the following:

1. Horizontal alignment of fiber optic conduit

2. Location of all pull boxes.

**END OF SECTION**

# SECTION 15050

# COMMON WORK RESULTS FOR MECHANICAL EQUIPMENT

## PART 1 GENERAL

### 1.01 SUMMARY

A. Section includes:
   1. Mechanical equipment requirements for:
      a. Basic design and performance criteria.
      b. Prescriptive requirements for common components.
      c. Installation requirements.

### 1.02 REFERENCES

A. American Bearing Manufacturers Association (ABMA):
   1. 9 - Load Ratings and Fatigue Life for Ball Bearings.
   2. 11 - Load Ratings and Fatigue Life for Roller Bearings.

B. American Gear Manufacturers Association (AGMA) Standards.

C. ASTM International (ASTM):
   1. A193 - Standard Specification for Alloy-Steel and Stainless Steel Bolting for High Temperature or High Pressure Service and Other Special Purpose Applications.
   2. A194 - Standard Specification for Carbon and Alloy Steel Nuts for Bolts for High Pressure or High Temperature Service, or Both.
   3. A320 - Standard Specification for Alloy-Steel and Stainless Steel Bolting for Low-Temperature Service.
   4. F593 - Standard Specification for Stainless Steel Bolts, Hex Cap Screws, and Studs.
   5. F594 - Standard Specification for Stainless Steel Nuts.

D. Hydraulic Institute (HI):
   1. 9.6.8 - Guideline for Dynamics of Pumping Machinery.

E. International Concrete Repair Institute (ICRI):
   1. Guideline No. 310.2R, Selecting and Specifying Concrete Surface Preparation for Sealers, Coatings, Polymer Overlays, and Concrete Repair.

F. International Organization for Standardization (ISO):
   1. 21940 - Mechanical Vibration - Rotor Balancing - Part 1: Introduction.

G. National Electrical Manufacturers Association (NEMA):
   1. MG-1 - Motors and Generators.

H. Society for Protective Coatings (SSPC):
   1. SP-1-Solvent Cleaning.

## 1.03 TERMINOLOGY

A. The words and terms listed below are not defined terms that require initial capital letters, but, when used in this Section, have the indicated meaning:
   1. These definitions shall be applied to equipment other than pumps, unless otherwise specified in Technical Sections.
   2. Resonant frequency:
      a. The frequency of a periodic excitation force that is close to the natural frequencies of an object. Also known as critical frequency, critical speed, or resonant speed.
      b. An undamped resonant frequency within the separation margin is always considered harmful under Level 1 analysis.
      c. A resonant frequency that occurs within a separation margin of 15 percent above or below the operating speed range and has a log decrement greater than +0.3 is considered harmful under Level 2 and Level 3 analysis.
   3. Separation margin:
      a. The span of operating speeds within which interference between excitation orders and resonant frequencies indicate the possibility of harmful vibrations.
      b. The separation margin for a specific application extends 15 percent above and 15 percent below the span of operating speed required for the specified performance conditions.

## 1.04 SUBMITTALS

A. Items in this Section are components of equipment or systems specified in other sections:
   1. Include data for this Section's components with the equipment or system Submittal.

# PART 2 PRODUCTS

## 2.01 DESIGN AND PERFORMANCE CRITERIA

A. General:
   1. Equipment manufacturer's responsibility extends to selection and mounting of gear drive units, motors or other prime movers, accessories, and auxiliaries to provide a complete, operable unit.
   2. Equipment that prevents reverse rotation shall be capable of both:
      a. Handling 150 percent of the maximum torque at maximum operating speed.
      b. 150 percent of torque that will be generated in reverse direction due to equipment shutoff head as calculated by the manufacturer.
   3. Motor shall be designed to run safely in the reverse direction at up to 140 percent times the reverse runaway speed under shutoff head conditions.

4. Repair, replace, and modify equipment exhibiting vibration performance that does not meet criteria specified in this Section at no additional cost to Owner:
    a. Acceptable remedies include adjustments to equipment component geometry, materials, energy absorbing couplings, etc.
    b. Locking out speed interval(s) within equipment specified operating range is unacceptable.

## 2.02 POWER TRANSMISSION SYSTEMS

A. V-belts, sheaves, shaft couplings, chains, sprockets, mechanical variable-speed drives, variable frequency drives, gear reducers, open and enclosed gearing, clutches, brakes, intermediate shafting, intermediate bearings, and U-joints:
    1. Rated for 24 hour-a-day continuous service, or for intermittent service with frequent stops-and-starts, whichever is most severe.
    2. Sized with a service factor of 1.5 or greater:
        a. Apply service factor to nameplate horsepower and torque of prime source of power and not to actual equipment loading.
        b. Apply service factors in accordance with AGMA or as specified in the Technical Sections.

## 2.03 BEARINGS

A. Oil or grease lubricated, ball or roller antifriction type, of standard manufacture:
    1. Design lubrication system based on the equipment location to operate in the temperatures as specified in Section 01612 - Seismic Design Criteria.

B. Oil-lubricated bearings:
    1. Provide either pressure lubricating system or separate oil reservoir splash-type system as specified in the Technical Section.
    2. Design oil-lubrication system to safely absorb heat energy generated in bearings when equipment is operating in the following conditions.

C. Grease lubricated bearings, except those specified to be factory sealed:
    1. Fit with easily accessible grease supply, flush, drain, and relief fittings.
    2. Lubrication lines and fittings:
        a. Lines: Minimum 1/4-inch diameter stainless steel tubing.
        b. Multiple fitting assemblies: Mount fittings together in easily accessible location.
        c. Use standard hydraulic-type grease supply fittings:
            1) Manufacturers: One of the following or equal:
                a) Alemite.
                b) Zerk.

D. Ratings: Rated in accordance with ABMA 9 or ABMA 11 L10 life for bearings rating life of not less than 50,000 hours.

## 2.04 BELT DRIVES

A. Sheaves:
    1. Separately mounted on bushings by means of at least 3 pull-up bolts or cap tightening screws.

2. When 2 sheave sizes are specified, provide separate belts sized for each set of sheaves.
3. Statically balanced for all; dynamically balanced for sheaves that operate at a peripheral speed of more than 5,500 feet per minute.
4. Key bushings to drive shaft.

B. Belts:
1. Anti-static type when explosion-proof equipment or environment is specified.
2. When spare belts are specified, furnish 1 spare belt for every different type and size of belt-driven unit:
   a. Where 2 or more belts are involved, furnish matched sets.
   b. Identify as to equipment, design, horsepower, speed, length, sheave size, and use.
   c. Package in boxes labeled with identification of contents.

C. Manufacturers: One of the following or equal:
1. Dodge, Dyna-V belts with matching Dyna-V sheaves and Taper-Lock bushings.
2. T.B. Woods, Ultra-V belts with matching Sure-Grip sheaves and Sure-Grip bushings.

## 2.05 FLANGED PIPING CONNECTIONS

A. Unless specified otherwise in the Technical Sections or indicated on the Drawings, provide flat face flanges.

## 2.06 ASSEMBLY FASTENERS

A. General service: Stainless steel, Type 316:
1. Bolts: In accordance with ASTM F593, Alloy Group 2.
2. Nuts: In accordance with ASTM F594, Alloy Group 2.
3. Washers: Alloy group matching bolts and nuts.

B. High-temperature service or high-pressure service: Stainless steel, Type 316:
1. Bolts: In accordance with ASTM A193, Grade B8M, Class 1, heavy hex.
2. Nuts: In accordance with ASTM A194, Grade 8, heavy hex.
3. Washers: Alloy group matching bolts and nuts.

C. Low-temperature service: Stainless steel, Type 316:
1. Bolts: In accordance with ASTM A320, Grade B8M, Class 1, heavy hex.
2. Nuts: In accordance with ASTM A194, Grade B8M, heavy hex.
3. Washers: Alloy group matching bolts and nuts.

## 2.07 GUARDS AT MOVING COMPONENTS

A. Provide guards on rotating components that are within 7.5 vertical feet of an operating floor or platform.

B. Allow visual inspection of moving parts without removal.

C. Allow access to lubrication fittings.

D. Easily removable for maintenance.

E. Prevent entrance of rain or dripping water for outdoor locations.

F. Size belt and sheave guards to allow for installation of sheaves 15 percent larger and addition of 1 belt.

G. Materials:
   1. Sheet metal: Carbon steel, 12-gauge minimum thickness, hot-dip galvanized after fabrication, or Type 316 stainless steel.
   2. Fasteners: Type 316 stainless steel.

## 2.08 SHOP FINISHES

A. Manufacturer's standard primer and finish coatings:
   1. Primer only if field coatings are to be applied.

## 2.09 GEAR MOTORS

A. Parallel shaft drives: Helical gearing.

B. Right-angle drives: Worm gearing.

C. Manufacturers: One of the following or equal:
   1. Baldor Electric Company.
   2. Bodine Electric Company.

## 2.10 GEAR REDUCTION UNITS

A. Design and performance criteria:
   1. Gear type:
      a. Helical or herringbone.
   2. AGMA Class II service:
      a. Use more severe service condition when such is recommended by unit's manufacturer.
   3. Cast-iron housing with gears running in oil.
   4. Anti-friction bearings.
   5. Thermal horsepower rating based on maximum horsepower rating of prime mover, not actual load.

## 2.11 MOUNTING AND LIFTING PROVISIONS FOR EQUIPMENT

A. Equipment bases and base plates:
   1. Provide equipment bases with machined support pads, dowels for alignment for mating of adjacent items, openings for electrical conduits, and openings to facilitate grouting.
   2. Provide jacking screws in bases and supports for equipment and for equipment weighing 500 pounds or more.
   3. Materials:
      a. Match equipment material or steel.
      b. Coating: Match equipment.

B. Steel support frames:
   1. Carbon steel:
      a. At exterior locations, and at interior wet or moist locations, provide continuous welds on both sides to close seams and edges between steel members.
      b. Grind closure welds smooth.

C. Lifting lugs or eyes:
   1. Equipment units weighing 50 pounds or more:
      a. Provide with lifting lugs or eyes to allow removal with lifting device.

## 2.12 NAMEPLATES

A. Fastened to equipment at factory in an accessible and visible location.

B. Metal engraved or stamped with text, holes drilled or punched for fasteners.

C. Material: Aluminum or stainless steel.

D. Fasteners: Number 4 or larger oval head stainless steel screws or drive pins.

E. Text:
   1. Manufacturer's name, equipment model number, equipment serial number, and identification tag number.
   2. Additional items indicated in the Technical Sections.
   3. Indicate the following additional information as applicable:
      a. Maximum and normal rotating speed.
      b. Service class in accordance with applicable standards.
   4. Include for pumps:
      a. Rated total dynamic head in feet of fluid.
      b. Rated flow in gallons per minute.
      c. Impeller, gear, screw, diaphragm, or piston size.
   5. Include for motors:
      a. Drive speed.
      b. Motor horsepower with rated capacity.
   6. Include for gear reduction units:
      a. AGMA class of service.
      b. Service factor.
      c. Input and output speeds.

## 2.13 PUMP SHAFT COUPLINGS

A. General:
   1. Type and ratings: Non-lubricated designed for not less than 50,000 hours of operating life.
   2. Sizes: Provide as recommended by manufacturer for specific application, considering horsepower, speed of rotation, balance, and type of service.
   3. Suitable for an ambient temperature range between -40 degrees to +200 degrees Fahrenheit.

B. Close-couplings for electric-motor-driven equipment:
   1. Manufacturers: One of the following or equal:
      a. Lovejoy.
      b. T.B. Woods.
   2. Provide flexible couplings designed to accommodate angular misalignment, parallel misalignment, and end float.
   3. Manufacture flexible component of coupling from synthetic rubber or urethane.
   4. Provide service factor of 2.5 for electric motor drives and 3.5 for engine drives.
   5. Do not allow metal-to-metal contact between driver and driven equipment.

C. Flexible couplings for direct connected electric-motor-driven equipment:
   1. Manufacturers: One of the following or equal:
      a. Rexnord.
      b. T.B. Woods.
   2. Provide flexible couplings designed to accommodate shock loading, vibration, and shaft misalignment or offset.
   3. Provide flexible connecting element of rubber and reinforcement fibers.
   4. Provide service factor of 2.0.
   5. Connect stub shafts through collars or round flanges, firmly keyed to their shafts with neoprene cylinders held to individual flanges by through pins.

D. Spacer couplings:
   1. Where cartridge-type mechanical seals or non-split seals are specified, provide a spacer-type coupling of sufficient length to remove the seal without disturbing the driver or driven equipment.

## 2.14 PUMP SEAL CHAMBER AND SEALS

A. Seal chamber (stuffing box):
   1. Large enough to retrofit with double mechanical seal.

B. Seal types: Based on the following and as specified in the Technical Section:
   1. Type 2: Mechanical seal, flushing, cartridge, single O-ring:
      a. Manufacturers: One of the following or equal:
         1) Chesterton, S10.
         2) John Crane, 5610 Series.

C. Mechanical seals, Types 2:
   1. Balanced hydraulically.
   2. Spring:
      a. Stationary, out of pumping fluid.
      b. Material as specified in the Technical Section. Hastelloy C; Type Elgiloy or 17-7 PH stainless steel for split seals.
   3. O-ring: Viton™ 747.
   4. Gland: Type 316L stainless steel.
   5. Set screws: Type 316L stainless steel.
   6. Faces: Reaction bonded, silicon carbide/carbon.

7. Minimum differential pressures in either direction: 300 pounds per square inch gauge:
    a. Manufacturers: One of the following or equal:
        1) Chesterton, 1400.
        2) John Crane, equivalent product.

D. Flushing system:
    1. Provide flushing connections:
        a. 3/4-inch size.
        b. Provide API Standard 682 seal water plan arrangement as specified in the Technical Section:
            1) Plan 11 - Product stream seal water from discharge thru seal.
            2) Plan 13 - Product stream seal water thru seal to suction.
            3) Plan 23 - Closed loop seal water with cooler and pumping ring.
            4) Plan 32 - Production seal water discharged to product stream.
            5) Plan 54 - Production Seal Water Excluded from Product Stream.

## 2.15 SHIPPING

A. Prior to shipment of equipment:
    1. Bearings (and similar items):
        a. Pack separately or provide other protection during transport.
        b. Greased and lubricated.
    2. Gear boxes:
        a. Oil filled or sprayed with rust preventive protective coating.
    3. Fasteners:
        a. Inspect for proper torques and tightness.

# PART 3 EXECUTION

## 3.01 PRE-INSTALLATION

A. Field measurements:
    1. Prior to Shop Drawings preparation, take measurements and verify dimensions indicated on the Drawings.
    2. Ensure equipment and ancillary appurtenances fit within available space.

B. Sequencing and scheduling:
    1. Coordinate details of equipment with other related parts of the Work, including verification that structures, piping, wiring, and equipment components are compatible.
    2. Equipment anchoring: Obtain anchoring material and setting drawings from equipment manufacturers in adequate time for templates to be constructed and anchors to be cast-in-place.

## 3.02 LUBRICATION LINES AND FITTINGS

A. Support and protect lines from source to point of use.

B. Fittings:
   1. Bring fittings to outside of equipment in manner such that they are readily accessible from outside without necessity of removing covers, plates, housings, or guards.
   2. Mount fittings together wherever possible using factory-mounted multiple fitting assemblies securely mounted, parallel with equipment lines, and protected from damage.
   3. For underwater bearings: Bring fittings above water surface and mount on edge of structure above.

## 3.03 ALIGNMENT OF DRIVERS AND EQUIPMENT

A. Where drive motors or other drivers are connected to driven equipment by flexible coupling, disconnect coupling halves and align driver and equipment after driven equipment has been leveled on its foundation.

B. Comply with procedures of appropriate HI, AGMA Standards, alignment tolerances of equipment manufacturers and the following requirements to bring components into angular and parallel alignment:
   1. Maximum total coupling offset (not the per-plane offset): Not to exceed 0.5 mils per inch of coupling length for spacer couplings based on coupling length (not dial separation).
   2. Utilize jacking screws, wedges, or shims as recommended by the equipment manufacturer and as specified in the equipment sections.

C. Use reverse-indicator arrangement dial-type or laser-type alignment indicators: Mount indicators on the driver/coupling flange and equipment/coupling flange. Alignment instrumentation accuracy shall be sufficient to read angular and radial misalignment at 10 percent or less of the manufacturer's recommended acceptable misalignment.

D. Alignment and calculations shall include measurement and allowance for thermal growth, spacer coupling length, indicator separation, and axial spacing tolerances of the coupling.

E. When alignment satisfies most stringent tolerance of system components, grout between base and foundation:
   1. Allow minimum 48 hours for grout to harden.
   2. After grout hardens, remove jacking screws, tighten anchor bolts and other connections, and recheck alignment.
   3. Correct alignment as required.

## 3.04 EQUIPMENT SUPPORT AND ANCHORING TO STRUCTURES

A. Anchor equipment to structures as indicated on the Drawings and as specified.

B. Obtain final anchor bolt layouts for equipment prior to:
   1. Detailing reinforcement for equipment pads.
   2. Preparation of Shop Drawings for metal structures supporting equipment.

C. Anchor bolt templates:
   1. Provide templates as specified in the Technical Sections.

2. Use final anchor bolt layout to construct templates for setting anchor bolts.
3. Make templates:
   a. Rigid, and non-deformable during use.
   b. With longitudinal axes of anchors parallel.
   c. With longitudinal axes of anchors perpendicular to surface supporting the equipment.
4. Templates may be reused for multiple locations of the same equipment only if:
   a. Templates are in “like-new” condition prior to each reuse.
   b. Anchor layout has not been deformed or damaged by previous installation, removal, or handling of templates.
5. Sequence:
   a. Set and support templates prior construction of structures surrounding anchors.
   b. Position anchors in templates to provide designated embedment in supporting structure, with required projection for installation of grout, base plates, and hardware for tightening.
   c. Construct concrete or masonry around anchors using methods that preserve required anchor positions and alignment, and clearances to edges of supports or structures.

D. Anchor adjustment sleeves:
1. Use of adjustment sleeves around anchors:
   a. Is at the option of the Contractor.
   b. Does not relieve Contractor of obligation to construct and use templates for setting of anchors.
   c. May required increased anchor embedment length to develop the strength of the anchor in the embedded length below the adjustment sleeve.
2. Submittal requirements for anchor adjustment sleeves:
   a. Provide within sufficient time for Engineer approval and not less than 10 working days before setting those items.
   b. Proposed locations of sleeves.
   c. Details and dimensions of sleeves.
   d. Sleeve materials of construction, and coatings.
   e. Information on sleeve filler material and means of filler removal.
   f. Type, details, and dimensions of anchor bolts or anchor rods to be used with sleeves.
   g. Calculations showing development of anchor load capacity below the bottom of the sleeve.
   h. Plan for removal of sleeve fillers, if any.
   i. Plan for placement and consolidation of flowable grout inside sleeves and to a level equal to top of concrete slab or equipment pad surrounding the sleeve.

## 3.05 GROUTING UNDER EQUIPMENT BASES, BASE PLATES, SOLE PLATES, AND SKIDS

A. General:
1. Comply with equipment manufacturer’s installation instructions including:
   a. Tolerances for level.
   b. Tolerances for vertical and horizontal alignment.

c. Requirements or recommendations for grouting spaces and grout installation.
d. Recommendations for tightening of equipment anchors after grout has cured.

2. Install equipment over grout as indicated on the Drawings or specified only after:
   a. Equipment is leveled and in proper alignment.
   b. Piping connections are complete and in alignment with no strain transmitted to equipment.
3. Install flowable grout, as specified in Section 03600 - Grouting, placed with forms and head boxes:
   a. Use flowable, non-shrink grout.
   b. Use flowable, non-shrink epoxy grout, only where indicated on the Drawings, where specified in Technical Sections, or when approved in advance by the Engineer.
   c. Grouting with dry-pack materials is not permitted.

B. Prepare equipment bases, base plates, soleplates, and skids for grouting:
1. Concrete equipment bases:
   a. Roughen surface in accordance with ICRI, Guideline No. 310.2R, Surface Preparation Profiles CSP-3 and CSP-4.
   b. Clean roughened concrete surfaces.
2. Base plates, soleplates, and skids:
   a. Clean surfaces in accordance with SSPC-SP-1-Solvent Cleaning, to remove dirt, dust, oil, grease, paint, and other material.

C. Level equipment for grouting:
1. Use removable jack screws, or removable steel wedges and shims to support and level equipment bases, base plates, sole plates, and skids:
   a. Do not use leveling nuts placed on equipment anchors to support or level equipment bases, base plates, sole plates, and skids.
2. Removable jack screws:
   a. Provide number, size, and locations of jack screws required to support and level equipment in accordance with manufacturer's recommendations.
   b. Drill and tap equipment base plates, sole plates, and skids for jack screws.
   c. Support jack screws on circular steel plates that have been epoxy bonded to the equipment foundation:
      1) Provide plates fabricated from Type 316 stainless steel where edges of support plates will have grout side cover of 3 inches or less in the finished work.
   d. Make provision for removal of jack screws after grouting:
      1) Prevent grout from bonding to jack screws by wrapping jack screw threads that will be in contact with grout with multiple layers of tape or other material acceptable to the Engineer.
   e. Place and cure grout.
   f. After grout is placed and cured:
      1) Remove jack screws and material used to prevent grout from bonding to jack screws.
      2) Provide jack screws to Owner for future use.
      3) Fill jack screw holes with grout.
      4) Cure grout as specified.

3. Removable steel wedges and shims:
    a. Use for equipment bases, base plates, sole plates, and skids where it is not practical to use jack screws.
    b. Provide number, size, and locations of wedges and shims required to support and level equipment in accordance with manufacturer's recommendations.
    c. Make provision for removal of wedges and shims after grouting:
        1) Prevent grout from bonding to wedges and shims by wrapping wedges and shims that contact grout with multiple layers of tape or other material acceptable to the Engineer.
        2) Locate and orient wedges and shims to allow for removal after grouting, and to facilitate placement of grout in the remaining voids.
    d. Place and cure grout.
    e. After grout is placed and cured:
        1) Remove wedges and shims, and material used to prevent grout from bonding to them.
        2) Fill jack screw holes with grout.
        3) Cure grout as specified.

D. Construct grout forms:
1. Provide forms:
    a. Rigid with adequate strength to withstand placement of grout.
    b. With surfaces that will produce a smooth, uniform finish for grout edges exposed in the finished work.
    c. That allow grout to flow horizontally beyond the perimeter of the equipment base plate a distance not less than the thickness of the grout, and not less than 1 inch.
2. Install forms:
    a. Seal form cracks and joints with elastomeric sealant to make form watertight.
    b. Line form surfaces in contact with grout with polyethylene film, or coat with 2 coats of heavy-duty paste wax.
3. Construct grout "head box" over entire length of one side of form:
    a. Make head box height sufficient to force grout to flow under full dimensions of equipment base and to the surrounding form faces.

E. Pre-grouting procedures:
1. Concrete surfaces receiving flowable, non-shrink grout:
    a. Saturate concrete surface in contact with grout and concrete surfaces extending not less than least 6 inches beyond limits of grout with clean water for a minimum of 24 hours prior to grouting.
    b. Just prior to grout placement, remove standing water using clean rags or oil-free compressed air. Provide "saturated surface dry" (SSD) concrete for grout placement.
2. Concrete surfaces receiving flowable, non-shrink epoxy grout:
    a. Do not saturate concrete prior to grout placement.

F. Grout placement and curing:
1. Place and cure grout as specified in Section 03600 - Grouting and in this Section.

2. Grouting:
   a. Keep level of grout in head box above bottom of equipment bases, base plates, sole plates, and skids always to drive flow under base.
   b. Maintain continuous grout flow from head box to opposite sides of forms without trapping air or forming voids.
   c. Vibrate, rod, or chain grout to facilitate grout flow, to consolidate grout, and to remove entrapped air.
3. After grout sets, remove forms and trim grout edges at 45-degree angle from bottom edge of equipment bases, base plates, sole plates, and skids.
4. Cure grout as specified in Section 03600 - Grouting.

G. After grout is cured:
   1. Remove jack screws or wedges and shims, and material used to prevent grout from bonding to leveling devices.
   2. Fill pockets from removed leveling devices with grout.
   3. Cure filled voids as specified in Section 03600 - Grouting.
   4. Tighten equipment anchors in accordance with equipment manufacturer requirements.

## 3.06 FIELD FINISHES

A. When touchup or repair is required, apply primer and coating systems as recommended by the equipment manufacturer.

END OF SECTION

# SECTION 15052

# COMMON WORK RESULTS FOR GENERAL PIPING

## PART 1 GENERAL

### 1.01 SUMMARY

A. Section includes:
   1. Basic materials and methods for metallic and plastic piping systems.

### 1.02 REFERENCES

A. American Society of Mechanical Engineers (ASME):
   1. B16.5 - Pipe Flanges and Flanged Fittings: NPS 1/2 through NPS 24, Metric/Inch Standard.
   2. B16.47 - Large Diameter Steel Flanges: NPS 26 Through NPS 60 Metric/Inch Standard.

B. American Water Work Association (AWWA):
   1. C11 - Rubber-Gasket Joints for Ductile-Iron Pressure Pipe.
   2. C151 - Ductile-Iron Pipe, Centrifugally Cast.
   3. C207 - Standard for Steel Pipe Flanges for Waterworks Services-Size 4 In. Through 144 In.

C. ASTM International (ASTM):
   1. A74 - Standard Specification for Cast Iron Soil Pipe and Fittings.
   2. A193 - Standard Specification for Alloy-Steel and Stainless Steel Bolting for High Temperature or High Pressure Service and Other Special Purpose Applications.
   3. A194 - Standard Specification for Carbon Steel, Alloy Steel, and Stainless Steel Nuts for Bolts for High Pressure or High Temperature Service, or Both.
   4. A307 - Standard Specification for Carbon Steel Bolts, Studs, and Threaded Rod 60,000 PSI Tensile Strength.
   5. A320 - Standard Specification for Alloy-Steel and Stainless Steel Bolting for Low-Temperature Service.
   6. A563 - Standard Specification for Carbon and Alloy Steel Nuts.
   7. B88 - Standard Specification for Seamless Copper Water Tube.
   8. D2000 - Standard Classification System for Rubber Products in Automotive Applications.
   9. D2513 - Standard Specification for Polyethylene (PE) Gas Pressure Pipe, Tubing and Fittings.
   10. F37 - Standard Test Methods for Sealability of Gasket Materials.
   11. F593 - Standard Specification for Stainless Steel Bolts, Hex Cap Screws, and Studs.

12. F594 - Standard Specification for Stainless Steel Nuts.
13. F2329 - Standard Specification for Zinc Coating, Hot-Dip, Requirements of Application to Carbon and Alloy Steel Bolts, Screws, Washers, Nuts, and Special Threaded Fasteners.

D. California Health and Safety Code.

## 1.03 TERMINOLOGY

A. The words and terms listed below are not defined terms that require initial capital letters, but, when used in this Section, have the indicated meaning:
   1. Buried pipes: Pipes that are buried in the soil with or without a concrete pipe encasement.
   2. Exposed pipe: Pipes that are located above ground, or located inside a structure, supported by a structure, or cast into a concrete structure.
   3. Pipes adjacent to a wet wall: Pipe centerline within 10 inches of the wet wall.
   4. Underground pipes: Buried pipes - see A. above.
   5. Underwater pipes: Pipes below the top of walls in basins or tanks containing water.
   6. Wet wall: A wall with water on at least one side.

# PART 2 PRODUCTS

## 2.01 GENERAL

A. Coatings and linings requirements stated in the Pipe Schedule, as modified in the individual pipe Technical Sections, and as specified in Section 09960 - High-Performance Coatings.

## 2.02 LINK TYPE SEALS

A. Characteristics:
   1. Modular mechanical type, consisting of interlocking neoprene or synthetic rubber links shaped to continuously fill the annular space between the pipe and wall opening.
   2. Links to form a continuous rubber belt around the pipe.
   3. Provide a nylon polymer pressure plate with Type 316 stainless steel hardware. Isolate pressure plate from contact with wall sleeve.
   4. Hardware to be Type 316 stainless steel:
      a. Provide anti-galling lubricant for threads.

B. One of the following or equal:
   1. Link-Seal.
   2. Pipe Linx.

## 2.03 FLANGE BOLTS AND NUTS

A. General:
   1. Washer:
      a. Provide a washer for each nut.
      b. Washer shall be of the same material as the nut.
   2. Nuts: Heavy hex-head.
   3. Cut and finish flange bolts to project:
      a. Face of the bolt shall exceed face of nut by 1/8-inch minimum.
      b. A maximum of 1/4 inch beyond outside face of nut after assembly.
   4. Tap holes for cap screws or stud bolts when used.
   5. Lubricant for stainless steel bolts and nuts:
      a. Chloride-free.
      b. Manufacturers: One of the following or equal:
         1) Huskey FG-1800 Anti-Seize.
         2) Weicon Anti-Seize High-Tech.

B. Plastic pipe:
   1. On exposed pipes:
      a. Bolts and Nuts: Type 316 stainless steel.
   2. On underwater pipes and pipes adjacent to wet walls:
      a. Bolts and Nuts: Type 316 stainless steel.

## 2.04 GASKETS

A. General:
   1. Suitable for the specific fluids, pressure, and temperature conditions.
   2. Capable of being applied on surface of piping with cavities to provide for an improved seal with the internal piping pressure.

B. For flanged joints in ductile iron and steel piping for sewage service:
   1. Suitable for pressures equal and less than 150 pounds per square inch gauge, temperatures equal and less than 250 degrees Fahrenheit, and raw sewage service.
   2. Material:
      a. SBR or neoprene elastomer with minimum Shore A hardness value of 70.
      b. Reinforcement: Cloth or synthetic fiber.
      c. Thickness: Minimum 3/32-inch thick for less than 10-inch pipe; minimum 1/8-inch thick for 10 inch and larger pipe.
   3. Manufacturers: One of the following or equal:
      a. Pipe less than 48 inches in diameter:
         1) Garlock, Style 7797.
         2) John Crane, similar product.
      b. Pipe 48 inches in diameter and larger:
         1) Garlock, Style 3760.
         2) John Crane, similar product.

C. For flanged joints in polyvinyl chloride and polyethylene piping:
   1. Suitable for pressures equal to and less than 150 pounds per square inch gauge, with low flange bolt loadings, temperatures equal to and less than 120 degrees Fahrenheit, and polymer, chlorine, caustic solutions, and other

chemicals, except chemicals which liberate free fluorine including fluorochemicals and gaseous fluorine.

2. Material:
   a. Chemical systems: 0.125-inch thick Viton™ rubber.
   b. Sewer and water: 0.125-inch thick SBR.
3. Manufacturers: One of the following or equal:
   a. Garlock.
   b. John Crane, similar product.

## PART 3 EXECUTION

### 3.01 INSTALLATION

A. General:
   1. Piping drawings:
      a. Except in details, piping is indicated diagrammatically. Not every offset and fitting, or structural difficulty that may be encountered has been indicated on the Drawings. Sizes and locations are indicated on the Drawings.
      b. Perform minor modifications to piping alignment where necessary to avoid structural, mechanical, or other type of obstructions that cannot be removed or changed:
         1) Modifications are intended to be of minor scope, not involving a change to the design concept or a change to the Contract Price or Contract Times.
   2. Piping alternatives:
      a. Provide piping as specified in this Section, unless indicated on the Drawings or specified otherwise.
      b. Alternative pipe ratings:
         1) Piping with greater pressure rating than specified may be substituted in lieu of specified piping without changes to the Contract Price.
         2) Piping of different material may not be substituted in lieu of specified piping.
      c. Valves in piping sections: Capable of withstanding specified test pressures for piping sections and fabricated with ends to fit piping.
      d. Grooved joints: Use couplings, flange adapters, and fittings of the same manufacturer:
         1) Manufacturer's factory trained representative:
            a) Provide on-site training for Contractor's field personnel.
            b) Periodically visit the jobsite to verify Contractor is following best recommended practices.
         2) Distributor's representative is not considered qualified to conduct the training or jobsite visits.
      e. Flanged joints: Where one of the joining flanges is raised face type, provide a matching raised face type flange for the other joining flange.
   3. Unless otherwise indicated on the Drawings, piping at pipe joints, fittings, couplings, and equipment shall be installed without rotation, angular deflection, vertical offset, or horizontal offset.

B. Wall and slab penetrations:
   1. Provide sleeves for piping penetrations through aboveground masonry and concrete walls, floors, ceilings, roofs, unless specified or otherwise indicated on the Drawings.
   2. For piping 1 inch in nominal diameter and larger, provide sleeves with minimum inside diameters of 1 inch plus outside diameter of piping. For piping smaller than 1 inch in nominal diameter, provide sleeve of minimum twice the outside diameter of piping:
      a. Arrange sleeves and adjacent joints so piping can be pulled out of sleeves and replaced without disturbing the structure.
      b. Cut ends of sleeves flush with surfaces of concrete, masonry, or plaster.
      c. Conceal ends of sleeves with escutcheons where piping runs through floors, walls, or ceilings of finished spaces within buildings.
      d. Seal spaces between pipes and sleeves with link-type seals when not otherwise specified or indicated on the Drawings.
   3. Provide flexibility in piping connecting to structures to accommodate movement due to soil settlement and earthquakes. Provide flexibility using details indicated on the Drawings.
   4. Core drilled openings:
      a. Do not damage or cut existing reinforcing bars, electrical conduits, or other items embedded in the existing concrete without acceptance by the Engineer.
      b. Determine location of reinforcing bars or other obstructions with a non-destructive indicator device.
      c. Remove dust and debris from hole using compressed air.

C. Exposed piping:
   1. Install exposed piping in straight runs parallel to the axes of structures, unless otherwise indicated on the Drawings:
      a. Install piping runs plumb and level, unless otherwise indicated on the Drawings:
         1) Slope plumbing drain piping with a minimum of 1/4-inch per foot downward in the direction of flow.
   2. Install exposed piping after installing equipment and after piping and fitting locations have been determined.
   3. Support piping: As specified in Section 15061 - Pipe Supports and Section 15062 - Preformed Channel Pipe Support System:
      a. Do not transfer pipe loads and strain to equipment.
   4. In addition to the joints indicated on the Drawings, provide unions, flexible couplings, flanged joints, flanged coupling adapters, and other types of joints or means which are compatible with and suitable for the piping system, and necessary to allow ready assembly and disassembly of the piping.
   5. Assemble piping without distortion or stresses caused by misalignment:
      a. Match and properly orient flanges, unions, flexible couplings, and other connections.
      b. Do not subject piping to bending or other undue stresses when fitting piping.
      c. Do not correct defective orientation or alignment by distorting flanged joints or subjecting flange bolts to bending or other undue stresses.
      d. Flange bolts, union halves, flexible connectors, and other connection elements shall slip freely into place.

e. Alter piping assembly to fit when proper fit is not obtained.
f. Install eccentric reducers or increasers with the top horizontal for pump suction piping.

D. Venting piping under pressure:
1. Lay piping under pressure flat or at a continuous slope without air traps, unless otherwise indicated on the Drawings.
2. Install plug valves as air bleeder cocks at high points in piping:
a. Provide 1-inch plug valves for water lines and 2-inch plug valves for sewage and sludge lines, unless otherwise indicated on the Drawings.
3. Provide additional pipe taps with plug cocks and riser pipes along piping as required for venting during initial filling, disinfecting, and sampling.
4. Before piping is placed into service, close plug valves and install plugs. Protect plugs and plug valves from corrosion as specified in Section 09960 - High-Performance Coatings.

E. Restraining above ground piping:
1. At valves and at fittings where piping changes direction, changes sizes, and at ends:
a. When piping is aboveground or underwater, use mechanical or structural restraints.
b. Determine thrust forces by multiplying the nominal cross-sectional area of the piping by 125 psi.
2. Provide restraints with ample size to withstand thrust forces resulting from test pressures:
c. During testing, provide suitable temporary restraints where piping does not require permanent restraints.

F. Connections to existing piping:
1. Expose existing piping to which connections are to be made with sufficient time to permit, where necessary, field adjustments in line, grade, or fittings:
a. Protect domestic water/potable water supplies from contamination:
1) Make connections between domestic water supply and other water systems in accordance with requirements of public health authorities.
2) Provide devices approved by owner of domestic water supply system to prevent flow from other sources into the domestic supply system.
2. Make connections to existing piping and valves after sections of new piping to be connected have been tested and found satisfactory.
3. Provide sleeves, flanges, nipples, couplings, adapters, and other fittings needed to install or attach new fittings to existing piping and to make connections to existing piping.
4. For flanged connections, provide stainless steel bolts with isolation bushings and washers, and full-face flange gaskets.

G. Connections between ferrous and nonferrous metals:
1. Connect ferrous and nonferrous metal piping, tubing, and fittings with dielectric couplings especially designed for the prevention of chemical reactions between dissimilar metals.
2. Nonferrous metals include aluminum, copper, and copper alloys.

H. Flanged connections between dissimilar metals such as ductile iron pipe and steel pipe:
   1. Provide 316 stainless steel bolts with isolation bushings and washers, and full-face flange gaskets.

## 3.02 CLEANING

A. Piping cleaning:
   1. Upon completion of installation, clean piping interior of foreign matter and debris.
   2. Perform special cleaning when required by the Contract Documents.

B. Conduct pressure and leak test, as specified.

## 3.03 PIPE SCHEDULE

A. As specified in Attachment A - Pipe Schedule.

END OF SECTION

# ATTACHMENT A - PIPE SCHEDULE

| PIPE SCHEDULE | | | | | | | | | | | |
|---|---|---|---|---|---|---|---|---|---|---|---|
| **Process Abbrev.** | **Service** | **Nominal Diameter (inches)** | **Material** | **Pressure Class Special Thickness Class Schedule Wall Thickness** | **Pipe Spec. Section** | **Joints/ Fittings** | **Test Pressure/ Method** | **Lining** | **Coating** | **Service Conditions** | **Comments** |
| D | Drain | | | | | | | | | | |
| | Aboveground | 3 - 6 | PVC | SCH 80 | 15230 - Plastic Piping and Tubing | SW | 125 psig/LH | None | Acrylic per Section 09960 | | |
| DS | Digested Sludge | | | | | | | | | | |
| | Aboveground | 3 | PVC | SCH 80 | 15230 - Plastic Piping and Tubing | SW | 125 psig/HH | None | Acrylic per Section 09960 | | |
| POL | Polymer | | | | | | | | | | |
| | Aboveground | 1 | PVC | SCH 80 | 15230 - Plastic Piping and Tubing | SW | 125 psig/LH | None | Acrylic per Section 09960 | | |
| 1W | Potable Water | | | | | | | | | | |
| | Aboveground | 1 | PVC | SCH 80 | 15230 - Plastic Piping and Tubing | SW | 200 psig/HH | None | Acrylic per Section 09960 | | |

| PIPE SCHEDULE | | | | | | | | | | | |
|---|---|---|---|---|---|---|---|---|---|---|---|
| **Process Abbrev.** | **Service** | **Nominal Diameter (inches)** | **Material** | **Pressure Class Special Thickness Class Schedule Wall Thickness** | **Pipe Spec. Section** | **Joints/ Fittings** | **Test Pressure/ Method** | **Lining** | **Coating** | **Service Conditions** | **Comments** |
| 3W | Reclaimed Water | | | | | | | | | | |
| | Aboveground | 2 | PVC | SCH 80 | 15230 - Plastic Piping and Tubing | SW | 200 psig/HH | None | Acrylic per Section 09960 | | |

Abbreviations:

1. The following abbreviations used in the column of test method refer to the respective methods as specified in Section 15956 - Piping Systems Testing.
   - AM Air method
   - GR Gravity method
   - HH High head method
   - LH Low head method
   - SC Special case
2. Abbreviations to designate piping include the following:
   - B&SP Bell and spigot
   - BSP Black Steel Pipe
   - CE Ceramic epoxy lining
   - CI Cast iron
   - CISP Cast iron soil pipe
   - CL Class, followed by the designation
   - CM Cement mortar
   - CTP Coal tar pitch
   - DIP Ductile iron piping
   - EPP Epoxy polyurethane coating
   - FL Flange
   - GA Gauge, preceded by the designation
   - GE Grooved end joint
   - GL Glass lined
   - GSP Galvanized steel pipe
   - MJ Mechanical joint
   - MWA Mechanical wedge action
   - NPS Nominal pipe size, followed by the number in inches
   - psi pounds per square inch
   - psig pounds per square inch gauge
   - PE Polyethylene
   - PEE Polyethylene encasement
   - PTW Polyethylene tape wrap
   - PVC Polyvinyl Chloride
   - RPO Restrained push-on
   - SCH Schedule, followed by the designation
   - SCRD Screwed-on
   - SST Stainless steel
   - SW Solvent welded
   - VCP Vitrified clay piping
   - WLD Weld

# SECTION 15061

# PIPE SUPPORTS

## PART 1 GENERAL

### 1.01 SUMMARY

A. Section includes:
   1. Supports for pipe, fittings, valves, and appurtenances.

### 1.02 REFERENCES

A. ASTM International (ASTM):
   1. A380 - Standard Practice for Cleaning, Descaling, and Passivation of Stainless Steel Parts, Equipment, and Systems.
   2. A967 - Standard Specification for Chemical Passivation Treatments for Stainless Steel Parts.

B. Manufacturers Standardization Society (MSS):
   1. SP-58 - Pipe Hangers and Supports - Materials, Design, Manufacture, Selection, Application, and Installation.

### 1.03 SUBMITTALS

A. Product data:
   1. Design features.
   2. Load capacities.
   3. Material designations by UNS alloy number or ASTM Specification and Grade.
   4. Data needed to verify compliance with the Specifications.
   5. Catalog data.
   6. Clearly mark submittal information to show specific items, materials, and accessories or options being furnished.

B. Submit sealed and signed calculations for all pipe supports. Calculations shall meet the requirements as specified in Section 01612 - Seismic Design Criteria.

### 1.04 WARRANTY

A. Provide warranty as specified in Division 01.

## PART 2 PRODUCTS

### 2.01 MATERIALS

A. General:
   1. 316 stainless steel:
      a. Fabricate as specified in Section 05500 - Metal Fabrications.

b. Finish requirements: Remove free iron, heat tint oxides, weld scale, and other impurities, and obtain a passive finished surface.
c. At the shop, perform pickling and passivation on all surfaces inside and out in accordance with ASTM A380 or ASTM A967.
d. Field welding is prohibited unless specifically allowed by the Owner. All field welds shall be passivated.

B. Outdoor areas: Areas exposed to the natural outdoor environment:
1. Type 316 Stainless Steel.

C. Stainless steel piping system:
1. Type 316 Stainless Steel.

D. Fasteners:
1. As specified in Section 05500 - Metal Fabrications.

## 2.02 PIPE SUPPORTS

A. Hanger rods: Sized to match suspended pipe hanger, or as indicated on the Drawings:
1. Manufacturers: One of the following or equal:
a. For stainless steel piping:
1) Bergen-Power, Figure 133.
2) Nibco-Tolco, Figure 103.
b. For all other piping, unless indicated on the Drawings:
1) Anvil International, Figure 140.
2) Bergen-Power, Figure 133.
3) Cooper B-Line Systems, Inc., Figure B3205.

B. Hanger rods, continuously threaded: Sized to match suspended pipe hanger, or as indicated on the Drawings:
1. Manufacturers: One of the following or equal:
a. For stainless steel piping:
1) Bergen-Power, Figure 94.
2) FM Stainless Fasteners.
b. For steel and ductile iron piping:
1) Anvil International, Figure 146.
2) Bergen-Power, Figure 94.

C. Eye bolts:
1. For stainless steel piping:
a. Type 316 stainless steel, welded and rated equal to full load capacity of rod.
2. For all other piping, unless indicated on the Drawings:
a. Welded and rated equal to full load capacity of rod.

D. Welded eyebolt rod:
1. Manufacturers: One of the following or equal:
a. For stainless steel piping:
1) FM Stainless Fasteners.
2) Nibco-Tolco, Figure 101.

b. For all other piping, unless indicated on the Drawings:
   1) Anvil International, Figure 278.
   2) Bergen-Power, Figure 93.
   3) Cooper B-Line Systems, Inc., Figure B3210.

E. Adjustable ring hangers: MSS SP-58, Type 7 or Type 9 (system dependent):
   1. Manufacturers: One of the following or equal:
      a. For stainless steel piping:
         1) Bergen-Power, Figure 100SS.
         2) Nibco-Tolco, Figure 1C.I.
      b. For all other piping, unless indicated on the Drawings:
         1) Anvil International, Figure 69.
         2) Cooper B-Line Systems, Inc., Figure B3172.

F. Adjustable clevis hangers: MSS SP-58, Type 1:
   1. Manufacturers: One of the following or equal:
      a. For stainless steel piping:
         1) Cooper B-Line Systems, Inc., Figure B3100 or B3102.
         2) FM Stainless Fasteners, Figure 60.
      b. For all other piping, unless indicated on the Drawings:
         1) Anvil International, Figure 260 or Figure 590.
         2) Bergen-Power, Figure 100.
         3) Cooper B-Line Systems, Inc., Figure B3100 or B3102.

G. Adjustable clevis hangers for insulated pipe: Oversize:
   1. Manufacturers: One of the following or equal:
      a. For stainless steel piping:
         1) Nibco-Tolco, Figure 1A.
      b. For all other piping, unless indicated on the Drawings:
         1) Anvil International, Figure 300.
         2) Bergen-Power, Figure 100EL.
         3) Cooper B-Line Systems, Inc. Figure B3108.

H. Single rod hangers for steam pipe: MSS SP-58, Type 43; malleable iron or steel yoke and roller hangers; swivel to allow rotation of yoke on rod:
   1. Manufacturers: One of the following or equal:
      a. For stainless steel piping:
         1) Cooper B-Line Systems, Inc., Figure B3110.
         2) FM Fasteners, Figure 81.
         3) Nibco-Tolco, Figure 324.
      b. For all other piping, unless indicated on the Drawings:
         1) Anvil International, Figure 181.
         2) Cooper B-Line Systems, Inc., Figure B3110.

I. Double rod hangers for steam pipe: MSS SP-58, Type 41:
   1. Manufacturers: One of the following or equal:
      a. For stainless steel piping:
         1) FM Stainless Fasteners, Figure 71.
      b. For all other piping, unless indicated on the Drawings:
         1) Anvil International, Figure 171.
         2) Cooper B-Line Systems, Inc., Figure B3114.

J. Brackets: MSS SP-58, Type 32 with back plate; rated for 1,500 pounds:
   1. Manufacturers: One of the following or equal:
      a. For stainless steel piping:
         1) Cooper B-Line Systems, Inc., Figure B3066.
         2) FM Stainless Fasteners, Figure 98.
         3) Nibco-Tolco, Figure 30M.
      b. For all other piping, unless indicated on the Drawings:
         1) Anvil International, Figure 195.
         2) Cooper B-Line Systems, Inc., Figure B3066.

K. Standard U-bolt: MSS SP-58, Type 24:
   1. Manufacturers: One of the following or equal:
      a. For stainless steel piping:
         1) Cooper B-Line Systems, Inc., Figure B3188.
         2) FM Stainless Fasteners, Figure 37.
         3) Nibco-Tolco, Figure 110.
      b. For all other piping, unless indicated on the Drawings:
         1) Anvil International, Figure 137.
         2) Bergen-Power, Figure 283.
         3) Cooper B-Line Systems, Inc., Figure B3188.

L. Riser clamps: MSS SP-58, Type 8:
   1. Manufacturers: One of the following or equal:
      a. For stainless steel piping:
         1) Cooper B-Line Systems, Inc., Figure B3373.
         2) FM Stainless Fasteners, Figure 61.
      b. For all other piping, unless indicated on the Drawings:
         1) Anvil International, Figure 261.
         2) Bergen-Power, Figure 126.
         3) Cooper B-Line Systems, Inc., Figure B3373.

M. Pipe clamps: MSS SP-58, Type 4:
   1. Manufacturers: One of the following or equal:
      a. For stainless steel piping:
         1) Cooper B-Line Systems, Inc., Figure 3140.
         2) Nibco-Tolco, Figure 4.
      b. For all other piping, unless indicated on the Drawings:
         1) Anvil International, Figure 212.
         2) Bergen-Power, Figure 175.
         3) Cooper B-Line Systems, Inc., Figure B3140.

N. Adjustable offset pipe clamp:
   1. Manufacturers: One of the following or equal:
      a. For stainless steel piping:
         1) Cooper B-Line Systems, Inc., Figure B3149.
         2) FM Stainless Fasteners, Figure 63.
         3) Nibco-Tolco, Figure 4.
      b. For all other piping, unless indicated on the Drawings:
         1) Anvil International, Figure 100.
         2) Cooper B-Line Systems, Inc., Figure B3149.

O. Offset pipe clamp:
   1. Manufacturers: One of the following or equal:
      a. For stainless steel piping:
         1) Cooper B-Line Systems, Inc., Figure 3148.
         2) Nibco-Tolco, Figure 8.
      b. For all other piping, unless indicated on the Drawings:
         1) Anvil International, Figure 103.
         2) Cooper B-Line Systems, Inc., Figure B3148.

P. Floor stand or stanchion saddles: MSS SP-58, Type 37. Provided with U-bolt hold down yokes:
   1. Manufacturers: One of the following or equal:
      a. For stainless steel piping:
         1) FM Stainless Fasteners, Figure 59.
         2) Nibco-Tolco, Figure 318.
      b. For all other piping, unless indicated on the Drawings:
         1) Anvil International, Figure 259.
         2) Bergen-Power, Figure 125.
         3) Cooper B-Line Systems, Inc., Figure B3090.
      c. Threaded pipe stand support stanchion. Match pipe support material:
         1) Anvil International, Figure 63T.
         2) Bergen-Power, Figure 138.
         3) Cooper B-Line Systems Inc., Figure B3088ST.

Q. Spring hangers:
   1. Manufacturers: One of the following or equal:
      a. For stainless steel piping:
         1) Bergen-Power, Figure 920.
      b. For all other piping, unless indicated on the Drawings:
         1) Anvil International, Figure B-268, Type G.
         2) Bergen-Power, Figure 920.

R. One hole pipe clamps:
   1. Manufacturers: One of the following or equal:
      a. For stainless steel piping: Engineer knows of no product.
      b. For all other piping:
         1) Anvil International, Figure 126.
         2) Carpenter & Paterson, Figure 237S.

S. Welded beam attachment: MSS SP-58, Type 22:
   1. Manufacturers: One of the following or equal:
      a. For stainless steel piping:
         1) Cooper B-Line Systems, Inc., Figure 3083.
         2) Nibco-Tolco, Figure 304.
      b. For all other piping, unless indicated on the Drawings:
         1) Anvil International, Figure 66.
         2) Bergen-Power, Figure 113A or 113B.
         3) Cooper B-Line Systems, Inc., Figure B3083.

T. Heavy pipe clamp: MSS SP-58, Type 4:
   1. Manufacturers: One of the following or equal:
      a. For stainless steel piping:
         1) Nibco-Tolco, Figure 4H.
      b. For all other piping, unless otherwise indicated on the Drawings:
         1) Anvil International, Figure 216.
         2) Bergen-Power, Figure 298.

U. PTFE pipe slide assembly: MSS SP-58, Type 35 with lateral and vertical restraint:
   1. Manufacturers: One of the following or equal:
      a. For stainless steel piping:
         1) Nibco-Tolco, Figure 426.
      b. For all other piping, unless indicated on the Drawings:
         1) Anvil International, Figure 257, Type 3.
         2) Cooper B-Line Systems, Inc., Figure B3893.

V. Anchor bolts, concrete anchors, concrete inserts, powder-actuated fasteners, and sleeve anchors: As specified in Section 05120 - Structural Steel Framing.

## PART 3 EXECUTION

### 3.01 INSTALLATION

A. Support, suspend, or anchor exposed pipe, fittings, valves, and appurtenances to prevent sagging, overstressing, or movement of piping; and to prevent thrusts or loads on or against connected pumps, blowers, and other equipment.

B. Field verify support location, orientation, and configuration to eliminate interferences prior to fabrication of supports.

C. Carefully determine locations of inserts. Anchor to formwork prior to placing concrete.

D. Use flush shells only where indicated on the Drawings.

E. Do not use anchors relying on deformation of lead alloy.

F. Do not use powder-actuated fasteners for securing metallic conduit or steel pipe larger than 1 inch to concrete, masonry, or wood.

G. Suspend pipe hangers from hanger rods and secure with double nuts.

H. Install continuously threaded hanger rods only where indicated on the Drawings.

I. Use adjustable ring hangers or adjustable clevis hangers for 4-inch and smaller diameter pipe.

J. Use adjustable clevis hangers for pipe larger than 4 inches in diameter.

K. Secure pipes with double nutted U-bolts or suspend pipes from hanger rods and hangers:
   1. Use stainless steel U-bolts.

L. Provide thermoplastic elastomer cushion strips, Anvil AS 3792 or equal, around all PVC pipe inside pipe support clamps.

M. Support spacing:
1. Support tubing, PVC pipe, copper pipe and tubing, fiber-reinforced plastic pipe or duct, and rubber hose and tubing at intervals close enough to prevent sagging greater than 1/4-inch between supports.
2. Support PVC schedule 80 pipe horizontal and vertical runs at the maximum intervals shown in the table below, unless otherwise specified:

| PIPE SIZE (IN.) | SCHEDULE 40 PVC SUPPORT SPACING, FT | SCHEDULE 80 PVC SUPPORT SPACING, FT |
|---|---|---|
| 1/4 | 2.5 | 2.5 |
| 3/8 | 2.5 | 3 |
| 1/2 | 3 | 3.5 |
| 3/4 | 3 | 3.5 |
| 1 | 3.5 | 4 |
| 11/4 | 4 | 4.5 |
| 11/2 | 4 | 4.5 |
| 2 | 4 | 5 |
| 21/2 | 5 | 5.5 |
| 3 | 5 | 6 |
| 31/2 | 5.5 | 6.5 |
| 4 | 5.5 | 6.5 |
| 5 | 6 | 7 |
| 6 | 6.5 | 8 |
| 8 | 7 | 8.5 |
| 10 | 7.5 | 9 |
| 12 | 8.5 | 9.5 |
| 14 | 9 | 10 |
| 16 | 9.5 | 10.5 |
| 18 | 10 | 11 |
| 20 | 10.5 | 11.5 |
| 24 | 11.5 | 13 |

3. Support larger than 2-inch metallic piping on horizontal and vertical runs at maximum 10 feet on center, unless otherwise specified.
4. Do not suspend or support valves, pipe and fittings from another pipe or conduit.

N. Install supports at:
   1. Any change in direction.
   2. Both sides of flexible pipe connections.
   3. Base of risers.
   4. Floor penetrations.
   5. Connections to pumps, blowers, and other equipment.
   6. Valves and appurtenances.

O. Securely anchor plastic pipe, valves, and headers to prevent movement during operation of valves.

P. Anchor plastic pipe between expansion loops and direction changes to prevent axial movement through anchors.

Q. Provide elbows or tees supported from floors with base fittings where indicated on the Drawings.

R. Support base fittings with metal supports or, when indicated on the Drawings, support on concrete piers.

S. Do not use chains, plumbers' straps, wire, or similar devices for permanently suspending, supporting, or restraining pipes.

T. Support plumbing drainage and vents in accordance with plumbing code .

U. Supports, clamps, brackets, and portions of support system bearing against copper pipe: Copper plated, copper throughout, or isolated with neoprene or polyvinyl chloride tape.

V. Where pipe is insulated, install over-sized supports and hangers.

W. Install thermal pipe shield in accordance with MSS SP-58, Type 40 on pipe supports for insulated pipes.

X. Install riser clamps at floor penetrations and where indicated on the Drawings.

Y. Coat support system components as specified in Section 09960 - High-Performance Coatings.

END OF SECTION

# SECTION 15062

# PREFORMED CHANNEL PIPE SUPPORT SYSTEM

## PART 1 GENERAL

### 1.01 SUMMARY

A. Section includes: Preformed channel pipe support system consisting of preformed channels, fittings, straps, and fasteners engineered to support piping.

### 1.02 REFERENCES

A. American Institute of Steel Construction (AISC).

B. American Iron and Steel Institute (AISI).

C. Manufacturer's Standardization Society (MSS):
   1. SP-58 - Pipe Hangers and Supports - Materials, Design, and Manufacture.

### 1.03 SUBMITTALS

A. Product data.

### 1.04 QUALITY ASSURANCE

A. Design preformed channel pipe support system for loads in accordance with applicable provisions of:
   1. AISC Manual of Steel Construction.
   2. AISI Cold-Formed Steel Design Manual.

B. Product standards:
   1. Pipe support materials: In accordance with MSS SP-58.

## PART 2 PRODUCTS

### 2.01 MANUFACTURERS

A. Fabricate preformed channel pipe support system using, as a minimum, parts specified below and meeting the requirements specified under Design Criteria:
   1. Manufacturers: One of the following or equal:
      a. Unistrut, Series P1000 or P1001; P5500 or P5501.
      b. Allied Support Systems, Power Strut, Figure PS-200 or PS-200 2TS; PS-150 or PS-150 2TS.
      c. Cooper Ind., B-Line, Channel Type B22 or B22A; B12 or B12A.

## 2.02 MATERIALS

A. All materials shall be 316 stainless steel.

## 2.03 DESIGN AND PERFORMANCE CRITERIA

A. Design responsibility:
   1. The manufacturer of the preformed channel pipe support system is responsible for the design of the support system.
   2. Prepare design calculations utilizing the design criteria included in these Specifications.
   3. Prepare detailed shop drawings illustrating the layout of the support system and identifying the components of the support system.

B. Design criteria:
   1. Include live, dead, and seismic loads associated with piping, valves, and appurtenances. Consider the content of the pipes in load calculations.
   2. Minimum gauge thickness: 12-gauge.
   3. Allowable stress of channels:
      a. Steel channels: The lesser of 25,000 pounds per square inch, or 0.66 times yield stress of steel.
      b. Stainless steel channels: 0.66 times the yield stress of the stainless steel alloy.
   4. Maximum deflection: 1/240 of span.
   5. Allowable column loads: As recommended by manufacturer in published instruction for column's unsupported height and "K" value for calculating effective column length of not less than 1.0.
   6. Future loads:
      a. Support systems indicated on the Drawings may include spaces intended to accommodate future pipes.
      b. Assume such spaces are occupied by 6-inch diameter ductile iron pipes. Only the number of pipes that would physically fit into the space need be considered.
      c. Include the weight of the pipe contents in determining future loads. Assume pipe contents are water.
   7. Seismic design criteria: As specified in Section 01612 - Seismic Design Criteria as specified for mechanical equipment.
   8. Spacing of supports: As required to comply with design requirements but not more than 5 feet.

C. Supports below the top of walls of water bearing structures: Use Type 316 stainless steel for support system components.

## 2.04 ACCESSORIES

A. Preformed channel concrete inserts: Minimum 12 inches long:
   1. Manufacturers: One of the following or equal:
      a. Unistrut, Series P-3200.
      b. Allied Support Systems, Figure 282.
      c. Cooper Ind., B-Line Series B32I.

B. 90-degree angle fittings:
   1. Manufacturers: One of the following or equal:
      a. Unistrut, P1026.
      b. Allied Support Systems, Power Strut, P603.

C. Pipe straps:
   1. For pipes 8 inches in diameter and smaller: Use 2-piece universal strap with slotted hex head screw and nut:
      a. Manufacturers: One of the following or equal:
         1) Unistrut, Series P1109 through P1126.
         2) Allied Support Systems, PS1100.
         3) Cooper Ind., B-Line Series B2000.
   2. For stainless steel pipes: Use type of strap required for the pipe sizes specified above, but use Type 316 stainless steel materials.

D. Prefabricated double channel bracket:
   1. Manufacturers: One of the following or equal:
      a. Unistrut, P2542-P2546.
      b. Cooper Ind., B-Line Series B297.

E. Touch-up paint for painted surfaces: Same formulation as factory paint.

F. Cushion strip:
   1. For solvent welded plastic pipes in elevated temperatures, use a thermoplastic elastomer, cushion wrap designed for use from -50 degrees Fahrenheit to 275 degrees Fahrenheit. Contractor to add a cushion strip at each pipe support strap that meets this criteria:
      a. Manufacturers: One of the following or equal:
         1) Anvil, AS 3795.
         2) Unistrut, P2600 Unicushion.

## 2.05 FABRICATION

A. Do not galvanize or paint stainless steel components.

# PART 3 EXECUTION

## 3.01 INSTALLATION

A. Install preformed channel concrete inserts for vertical support, quantity based on manufacturer's structural design calculations.

B. Fasten preformed channel pipe supports to existing walls using Z-fittings and concrete anchors as indicated on the Drawings.

C. Fasten preformed channel pipe supports to preformed channel concrete inserts embedded in ceiling using U-shaped fittings.

D. Suspend threaded rods from concrete inserts embedded in ceiling. Support preformed channel pipe supports with threaded rods.

E. Prevent contact between pipes and support components of dissimilar metals. Utilize rubber coated, plastic coated, or vinyl coated components, stainless steel components, or wrap pipe with PVC or polyethylene tape.

F. Install support as near as possible to concentrated loads.

G. Install support within 2 feet of horizontal and vertical changes in pipe alignment.

H. Adjust supports or install shims to obtain specified slope or elevation.

END OF SECTION

# SECTION 15076

# PIPE IDENTIFICATION

## PART 1 GENERAL

### 1.01 SUMMARY

A. Section includes: Pipe identification including the following:
   1. Pipe identification markers, flow direction arrows, tags, and bands.

### 1.02 REFERENCES

A. American Society of Mechanical Engineers (ASME):
   1. A13.1 - Scheme for the Identification of Piping Systems.

### 1.03 SUBMITTALS

A. Submit following:
   1. Product data.
   2. Samples.
   3. Manufacturer's installation instructions.
   4. Submit the following:
      a. Operation and Maintenance Data.
      b. Warranty.

## PART 2 PRODUCTS

### 2.01 EXPOSED AND IN-CHASE PIPE IDENTIFICATION

A. For piping with outer diameter greater than or equal to 3/4-inch, provide lettered pipe markers and flow direction arrows:
   1. General requirements:
      a. Pipe markers shall include the following, minimum:
         1) Printed text identifying the pipe fluid.
            a) The text shall be all capital letters matching the text listed in the "Service" column of the Piping Schedule for the corresponding piping system.
         2) An arrow identifying the direction of fluid flow.
            a) The arrow can either be integral to the text marker or provided separately. If provided separately, the arrow must be placed immediately adjacent to each text marker, with the arrow aligned with the text such that the text and arrow are both visible from the same viewpoint.
            b) The arrow color shall match the text color, and the arrow background color shall match the text background color.
      b. Suitable for outdoor application from -40 degrees to 180 degrees Fahrenheit; in accordance with ASME A13.1 requirements.

c. Lettering:

| Outside Pipe Diameter Including Covering | Lettering Height |
|---|---|
| Less than 0.75 inches | N/A |
| 0.75 to 1.5 inches | 1/2-inch |
| 1.5 inches to 2 inches | 3/4-inch |
| 2.5 inches to 6 inches | 1-1/4 inches |
| 8 inches to 10 inches | 2-1/2 inches |
| Over 10 inches | 3-1/2 inches |

d. Marker colors:

| Marker Color System ID(1) | Fluid Service | Text/Arrow Color | Background Color |
|---|---|---|---|
| D | Filtrate Drain | White | Green |
| DS | Digested Sludge | White | Green |
| POL | Polymer | White | Yellow |
| 1W | Potable Water | White | Blue |
| 3W | Reclaimed Water | White | Purple |
| Notes:<br>(1) See Piping Schedule. | | | |

2. Self-adhesive type markers:
   a. Manufacturers: One of the following or equal:
      1) Seton, (of Brady Corporation), Opti Code Pipe Markers.
      2) Marking Services, Inc.
   b. Materials:
      1) Self-adhesive vinyl.
3. Snap-on markers:
   a. Manufacturers: One of following or equal:
      1) Brady Snap-On.
      2) Seton (of Brady Corporation) Setmark.

B. Pipe bands:
   1. When bands are required by the Piping Schedule for a specific piping system, provide solid-colored 4-inch wide bands.
      a. Color as specified in the Piping Schedule.
   2. Self-adhesive type.
   3. Suitable for outdoor application from -40 degrees to 180 degrees Fahrenheit.

## PART 3 EXECUTION

### 3.01 EXAMINATION

A. Verify satisfactory conditions of substrate for applying identification.

B. Verify that conditions are satisfactory for installation and application of products.

### 3.02 PREPARATION

A. Prepare and coat piping with the coating systems defined in the Piping Schedule.

B. Prepare surface in accordance with identification product manufacturer's instructions.

### 3.03 EXPOSED AND IN-CHASE PIPING IDENTIFICATION

A. Identify exposed and in-chase piping with flow direction arrows and lettering (for piping with outer diameter greater than or equal to 3/4-inch).

B. Provide lettering and flow direction arrows near equipment served, adjacent to valves, both sides of walls and floors where pipe passes through, at each branch or tee, and at intervals of not more than 50 feet in straight runs of pipe.
   1. Place markers on piping so they are visible from operator's position in walkway or working platform near piping. Locate markers along horizontal centerline of pipe, unless better visibility is achieved elsewhere.
   2. Do not apply markers, arrows, or tags to piping that is regularly submerged.

END OF SECTION

# SECTION 15110

# COMMON WORK RESULTS FOR VALVES

## PART 1 GENERAL

### 1.01 SUMMARY

A. Section includes: Basic requirements for valves.

### 1.02 REFERENCES

A. American Water Works Association (AWWA):
   1. C111/A21.11 - Standard for Rubber-Gasket Joints for Ductile-Iron Pressure Pipe Fittings.

B. ASTM International (ASTM):
   1. A126 - Standard Specification for Gray Iron Casting for Valves, Flanges, and Pipe Fittings.
   2. A480 - Standard Specification for General Requirements for Flat-Rolled Stainless and Heat-Resisting Steel Plate, Sheet, and Strip.
   3. A536 - Standard Specification for Ductile Iron Castings.

C. NSF International (NSF):
   1. 61 - Drinking Water System Components - Health Effects.

D. Society for Protective Coatings (SSPC):
   1. SP7 - Brush-Off Blast Cleaning.
   2. SP10 - Near-White Blast Cleaning.

### 1.03 SUBMITTALS

A. Product data:
   1. Submit the following information for each valve:
      a. Valve type, size, pressure rating, Cv factor.
      b. Coatings.
      c. Power valve actuators:
         1) Information on valve actuator including size, manufacturer, model number, limit switches, mounting; and motor enclosure, seating and unseating torque coefficient, dynamic torque, and bearing friction for calculation of maximum operating torque.
         2) Complete wiring diagrams and control system schematics.
      d. Manual valve actuators:
         1) Information on valve actuator including size, manufacturer, model number.
      e. Certified drawings with description of component parts, dimensions, weights, and materials of construction.

f. Clearly mark submittal information to show specific items, materials, and accessories or options being furnished.
g. Factory test data.

B. Provide vendor operation and maintenance manual.
1. Furnish bound sets of installation, operation, and maintenance instructions for each type of manual valve 4 inches in nominal size and larger, and all non-manual valves. Include information on valve operators.

C. Provide Manufacturer's Certificate of Source Testing.

D. Provide Manufacturer's Certificate of Installation and Functionality Compliance.

## 1.04 QUALITY ASSURANCE

A. Manufacturer qualifications:
1. Valves manufactured by manufacturers whose valves have had successful operational experience in comparable service.

## 1.05 DELIVERY STORAGE AND HANDLING

A. Protect valves and protective coatings from damage during handling and installation; repair coating where damaged.

# PART 2 PRODUCTS

## 2.01 DESIGN AND PERFORMANCE CRITERIA

A. Pressure rating:
1. Suitable for service under minimum working pressures of 150 pounds per square inch gauge.
2. When a piping system is specified in the Piping Schedule to be tested at a pressure greater than 150 pounds per square inch gauge, provide valves for that piping system with design working pressure which is sufficient to withstand the test pressure.

B. Valve to piping connections:
1. Metallic valves:
a. Valves 3 inches nominal size and larger: Flanged ends.
b. Valves less than 3 inches nominal size: Screwed ends.
2. Plastic valves in plastic piping systems:
a. Up to 4 inches: Provide solvent or heat welded unions.
b. 6 inches and above: Provide solvent or heat-welded flanges.

## 2.02 MATERIALS

A. Stainless steel: In accordance with ASTM A480, Type 316, UNS Alloy S31600.

B. Valve and operator bolts and nuts (not including flange bolts and nuts, which are specified in Section 15052 - Common Work Results for General Piping):
   1. Fabricated of 316 stainless steel
   2. Where dissimilar metals are being bolted, use stainless steel bolts with isolation bushings and washers.
   3. Underground bolts: Low-alloy steel in accordance with AWWA C111/A21.11.

C. Bronze and brass alloys: Use bronze and brass alloys with not more than 6 percent zinc and not more than 2 percent aluminum in the manufacture of valve parts; UNS Alloy C83600 or C92200 unless specified otherwise.

D. Cast iron valve bodies: In accordance with ASTM A126, Class 30 minimum.

E. Ductile iron valve bodies: In accordance with ASTM A536, Grade 65-45-12 minimum unless specified otherwise.

## 2.03 INTERIOR PROTECTIVE LINING

A. When specified in the particular valve specification, provide valves with type of protective lining specified in the particular valve Specification.

B. Apply protective lining to interior, non-working surfaces, except stainless steel surfaces.

C. Lining types:
   1. Fusion bonded epoxy:
      a. Manufacturers: The following or equal:
         1) 3-M Company, ScotchKote 134; certified to NSF 61 for drinking water use.
      b. Clean surfaces in accordance with SSPC SP 7 or SP 10, as recommended by epoxy manufacturer.
      c. Apply in accordance with manufacturer's published instructions.
      d. Lining thickness: 0.010 to 0.012-inch, except that:
         1) Lining thickness in grooves for gaskets: 0.005-inch.
         2) Do not coat seat grooves in valves with bonded seat.
      e. Quality control:
         1) Lining thickness: Measured with a non-destructive magnetic type thickness gauge.
         2) Verify lining integrity with a wet sponge-testing unit operating at approximately 60 volts, or as recommended by the lining manufacturer.
         3) Consider tests successful when lining thickness meets specified requirements and when no pinholes are found.
         4) Correct defective lining disclosed by unsuccessful tests, and repeat test.
         5) Repair pinholes with liquid epoxy recommended by manufacturer of the epoxy used for lining.

2. High solids epoxy:
    a. Product equivalent to high solids epoxy EPX-M-1 as specified in Section 09960 - High-Performance Coatings.
        1) Interior: Coat valve interior with manufacturer's equivalent high performance high solids epoxy coating system with a certifiable performance history for the service conditions and as approved by the Engineer. Manufacturer shall provide for approval, coating information sufficient to allow Engineer to assess equivalence to the specified high solids epoxy EPX-M-1 as specified in Section 09960 - High-Performance Coatings.
    b. Clean surfaces to meet SP-7 or SP-10, or as recommended by coating manufacturer.
    c. Quality control: After coating is cured, check coated surface for porosity with a holiday detector set at 1,800 volts, or as recommended by coating manufacturer.
        1) Repair holidays and other irregularities and retest coating.
        2) Repeat procedure until holidays and other irregularities are corrected.

## 2.04 VALVE OPERATORS

A. Valve operator "Open" direction: Open counterclockwise.

B. Provide valves located below operating level or deck with extensions for key operation or floor stands and handwheels, as indicated on the Drawings.

C. Provide manually operated valves located not more than 6 feet above the operating level with tee handles, wrenches, or handwheels.
    1. Make the valve operator more conveniently accessible by rolling valves, located more than 5 feet but less than 6 feet above the operating level, toward the operating side.
    2. Secure tee handles and wrenches to the valve head or stem, except where a handle or wrench so secured constitutes a hazard to personnel; in which case, stow handle or wrench immediately adjacent to the valve on or in a suitable hanger, bracket, or receptacle.

D. Fit valves located more than 6 feet above operating level with chain operated handles or valve wheels.
    1. Chains: Sufficient length to reach approximately 4 feet above the operating level.
    2. Where chains constitute a nuisance or hazard to operating personnel, provide holdbacks or other means for keeping the chains out of the way.

E. Provide an operator shaft extension from valve or valve operator to finished grade or deck level when buried valves, and other valves located below the operating deck or level, are specified or indicated on the Drawings to be key operated; provide 2 inches square AWWA operating nut, and box and cover as specified, or a cover where a box is not required.

## PART 3 EXECUTION

### 3.01 EXAMINATION

A. Preparation prior to installation:
   1. Install valves after the required submittal on installation has been accepted.
   2. Determine after flanged valves and flanged check valves are selected, the face-to-face dimensions of flanged valves and flanged check valves.

B. Fabricate piping to lengths taking into account the dimensions of flanged valves and flanged check valves.

### 3.02 INSTALLATION

A. Provide incidental work and materials necessary for installation of valves including flange gaskets, flange bolts and nuts, valve boxes and covers, concrete bases, blocking, and protective coating.

B. Where needed, furnish and install additional valves for proper operation and maintenance of equipment and plant facilities under the following circumstances:
   1. Where such additional valves are required for operation and maintenance of the particular equipment furnished by Contractor.
   2. Where such additional valves are required as a result of a substitution or change initiated by Contractor.

C. Valve and actuator orientation:
   1. Contractor shall coordinate with valve supplier final orientation of valve and actuator assembly based on Contractor's selection of equipment manufacturers and the valve and piping arrangement as indicated on the Drawings.
      a. Contractor shall rotate valve and/or actuator mounting orientation as specified in this Section unless otherwise indicated on the Drawings.
   2. Install valves with their stems in vertical position above the pipe, except as follows:
      a. Butterfly valves, gate valves aboveground, globe valves, ball valves, and angle valves may be installed with their stems in the horizontal position.
      b. Install buried plug valves with geared operators with their stems in a horizontal position.
   3. Install valves so that handles clear obstructions when the valves are operated from fully open to fully closed.

D. Place top of valve boxes flush with finished grade or as otherwise indicated on the Drawings.

E. Valves with threaded connections:
   1. Install valves by applying wrench on end of valve nearest the joint to prevent distortion of the valve body.
   2. Apply pipe joint compound or Teflon™ tape on external (male) threads to prevent forcing compound into valve seat area.

F. Valves with flanged connections:
   1. Align flanges and gasket carefully before tightening flange bolts.
   2. When flanges are aligned, install bolts and hand tighten.
   3. Tighten nuts opposite each other with equal tension before moving to next pair of nuts.

G. Valves with soldered connections:
   1. Do not overheat connection to prevent damage to resilient seats and metal seat rings.
   2. Position valves in full open position before starting soldering procedure.
   3. Apply heat to piping rather than to valve body.

## 3.03 FIELD APPLIED COATING OF VALVE EXTERIOR

A. Match color and be compatible with manufacturer's coating system and as specified in Section 09960 - High-Performance Coatings.
   1. When shop applied finish coating matches field applied coating on adjacent piping, touch up shop coating in damaged areas in accordance with instructions recommended by the paint manufacturer.
   2. When shop applied coating does not match field coating on adjacent piping, or when damage has occurred to the shop applied coating that requires more than touchup, blast clean valve surfaces or utilize other surface preparation recommended by the manufacturer of the coating material and apply the coating system used for coating adjacent piping.

## 3.04 COMMISSIONING

A. Manufacturer services from each manufacturer for all valves supplied:
   1. Provide Manufacturer's Certificate of Source Testing.
   2. Provide Manufacturer's Certificate of Installation and Functionality Compliance.

B. As specified elsewhere for specific valve types, sizes or actuators:
   1. Source testing.
   2. Manufacturers on site services for Owner Training, Installation Testing, Functional Testing, and during the Process Operational Period.

END OF SECTION

# SECTION 15111

# BALL VALVES

## PART 1 GENERAL

### 1.01 SUMMARY

A. Section includes: Ball valves.

B. As specified in Section 15110 - Common Work Results for Valves.

### 1.02 REFERENCES

A. American Society of Mechanical Engineers (ASME):
   1. B16.1 - Gray Iron Pipe Flanges and Flanged Fittings: Classes 25, 125, and 250.
   2. B16.5 - Pipe Flanges and Flanged Fittings: NPS 1/2 through 24.

B. American Water Works Association (AWWA):
   1. C507 - Standard for Ball Valves 6 Inch Through 48 Inch.

C. ASTM International (ASTM):
   1. A48 - Standard Specification for Gray Iron Castings.
   2. A216 - Standard Specification for Steel Castings, Carbon, Suitable for Fusion Welding, for High-Temperature Service.
   3. A351 - Standard Specification for Castings, Austenitic, for Pressure-Containing Parts.

### 1.03 SUBMITTALS

A. Product data: As specified in Section 15110 - Common Work Results for Valves:
   1. Operation and maintenance manual.

B. Commissioning submittals:
   1. Provide Manufacturer's Certificate of Installation and Functionality Compliance.

### 1.04 WARRANTY

A. Provide warranty as specified in Division 01.

## PART 2 PRODUCTS

### 2.01 DESIGN AND PERFORMANCE CRITERIA

A. General: Unless otherwise indicated on the Drawings use:
   1. Metal body ball valves on metallic pipelines.
   2. Plastic body ball valves on plastic pipelines.

## 2.02 PLASTIC BODY BALL VALVES AND BALL CHECK VALVES – FULL PORT (BAV40)

A. Manufacturers: One of the following or equal:
   1. Asahi America.
   2. Chemtrol Division, NIBCO, Inc.
   3. Georg Fischer Piping Systems.
   4. Hayward Flow Control.
   5. IPEX USA, LLC
   6. Plast-O-Matic Valves, Inc.

B. General:
   1. Type: Non-lubricated and capable of sealing in either flow direction.
   2. End connections:
      a. 4 inches and smaller size: Socket end true unions for solvent welded connection to adjacent piping.
   3. All valves shall have integral ISO 5211 mounting pad for actuator installation.
   4. All valves shall have integral plate for lock-out/tag-out.
   5. Stem: Double o-ring seal with shear point above seal.
   6. Pressure rating: Suitable for the test pressure and maximum temperature of the corresponding piping system listed in the Piping Schedule.

C. Materials:
   1. Body and ball:
      a. PVC piping systems: PVC.
   2. Seats: PTFE (Teflon™).
   3. O-rings: Match gasket material of corresponding piping system listed in the Piping Schedule. For polymer and digested sludge, use FKM (Viton™) .

# PART 3 EXECUTION

## 3.01 INSTALLATION

A. General: Install each type of valve in accordance with manufacturers' printed instructions.

## 3.02 COMMISSIONING

A. Manufacturer services:
   1. Provide certificates:
      a. Manufacturer's Certificate of Installation and Functionality Compliance.

B. Functional testing:
   1. Valves:
      a. Test witnessing: Witnessed.
      b. Conduct pressure and leak test, as specified in Section 15956 - Piping Systems Testing.

END OF SECTION

# SECTION 15116

# PLUG VALVES

## PART 1 GENERAL

### 1.01 SUMMARY

A. Section includes:
   1. Non-lubricated plug valves.
   2. Lubricated plug valves.

### 1.02 REFERENCES

A. American Water Works Association (AWWA):
   1. C517 - Resilient-Seated Cast Iron Eccentric Plug Valves.
   2. C606 - Grooved and Shouldered Joints.

B. ASTM International (ASTM):
   1. A126 - Standard Specification for Gray Iron Castings for Valves, Flanges, and Pipe Fittings.
   2. A536 - Standard Specification for Ductile Iron Castings.

### 1.03 SUBMITTALS

A. Submit as specified in 15110 - Common Work Results for Valves.

B. Shop drawings showing installation arrangement of major component assemblies.

C. Calculations.

D. Vendor operation and maintenance manual.

E. Commissioning submittals:
   1. Provide Manufacturer's Certificate of Source Testing:
      a. Interior coating.
   2. Provide Manufacturer's Certificate of Installation and Functionality Compliance.

### 1.04 WARRANTY

A. Provide warranty per Division 01.

## PART 2 PRODUCTS

### 2.01 GENERAL

A. As specified in Section 15110 - Common Work Results for Valves.

## 2.02 NON-LUBRICATED PLUG VALVES, FULL PORT (PV05)

A. Manufacturers: One of the following or equal:
   1. DeZurik, PEF.
   2. Clow Valve.
   3. Milliken, 601F/600F.

B. Design:
   1. Service: Digested sludge.
   2. Type: Non-lubricated eccentric type, in accordance with AWWA C517.
   3. Plug face: Resilient material that operates satisfactorily at a temperature of 180 degrees Fahrenheit continuous and 215 degrees Fahrenheit intermittent.
   4. Compression washer: Provide flat compression washer made of Teflon™, or of a material having equal physical characteristics on valve stem between plug and bonnet.
   5. Stem seals: Provide stem seals serviceable without unbolting the valve bonnet assembly.
   6. Grit excluders: Provide PTFE grit excluders at upper plug journals to prevent entry of foreign solids in bearing area.
   7. Clearly mark valves to indicate their open and closed positions.
   8. Provide valves with ends as required by piping details indicated on the Drawings.

C. Materials:
   1. Body and plug: ASTM A126, Class B, cast-iron or ASTM A536, Grade 65-45-12, ductile iron, with plug face of chloroprene neoprene material suitable for the intended service as specified under paragraph "Design" above.
   2. Body seats in valves 3 inch size and larger: Provide with overlay of not less than 90-percent nickel and minimum thickness of 1/8-inch on surfaces contacting the plug face.
   3. Stem bearing and bottom bearing: Type 316 stainless steel.
   4. Internal parts, except the body and plug: Type 316 stainless steel.
   5. Exposed nuts, bolts, and washers: Zinc plated. Exception: Exposed nuts, bolts, and washers for buried service: Stainless steel.

## 2.03 VALVE OPERATORS

A. Furnish valves with an operating wrench or worm gear operator:
   1. Equip valves 4-inch nominal size and smaller with a lever operator.

## 2.04 COATING

A. Coat and test interior metal surfaces as specified in Section 15110 - Common Work Results for Valves.

B. Field applied coating of valve exterior:
   1. Match color and be compatible with manufacturer's coating system and as specified in Section 09960 - High-Performance Coatings:
      a. When shop applied finish coating matches field applied coating on adjacent piping, touch up shop coating in damaged areas in accordance with instructions recommended by the paint manufacturer.
      b. When shop applied coating does not match field coating on adjacent piping, or when damage has occurred to the shop applied coating that requires more than touchup, blast clean valve surfaces or utilize other surface preparation recommended by the manufacturer of the coating material and apply the coating system used for coating adjacent piping.

## 2.05 SHIPMENT, SPARE PARTS, MAINTENANCE PRODUCTS, AND SPECIAL TOOLS

A. Provide 1 set of special tools required to install or service the equipment.

B. As specified in Section 01600 - Product Requirements and Section 01745 - Spare Parts, Special Tools, and Maintenance Materials.

# PART 3 EXECUTION

## 3.01 INSTALLATION

A. Install valves as specified in Section 15110 - Common Work Results for Valves and the manufacturer's instructions:

B. Install valve so that valve stem is in horizontal position.

C. Unless otherwise directed, observe the following rules for installation of eccentric plug valves on sewage, grit, sludge, or other liquid systems containing solids, silt, or fine sand:
   1. Install valves so that in closed position the pressure in the pipeline applies a seating head on the valves, except as noted in Item 4 below.
   2. In vertical pipelines, install valve with the seat side up.
   3. In horizontal pipelines, the plug shall swing upwards when opening, to permit flushing out of solids.
   4. Orient the valve to prevent the valve body from filling up with solids, when closed. However, when the pressure differential through the valve exceeds 25 psi, the higher pressure for valves without worm gear, electric, or air operators, shall be through the valve, to force the plug against the seat.
   5. For special applications, or when in doubt, consult with the manufacturer prior to installation.

## 3.02 COMMISSIONING

A. Manufacturer services:
   1. Provide certificates:
      a. Manufacturer's Certificate of Installation and Functionality Compliance.

B. Functional testing:
   1. Valves:
      a. Test witnessing: Witnessed.
      b. Conduct pressure and leak test as specified in Section 15110 - Common Work Results for Valves.

END OF SECTION

# SECTION 15117

# SPECIALTY VALVES

## PART 1 GENERAL

### 1.01 SUMMARY

A. Section includes: Specialty valves.

B. As specified in Section 15110 - Common Work Results for Valves.

### 1.02 REFERENCES

A. American Society of Mechanical Engineers (ASME):
   1. B16.42 - Ductile Iron Pipe Flanges and Flanged Fittings: Classes 150 and 300.

B. American Water Works Association (AWWA):
   1. C511 - Standard for Reduced Pressure-Principle Backflow-Prevention Assembly.

C. ASTM International (ASTM):
   1. A48 - Standard Specification for Gray Iron Castings.
   2. A126 - Standard Specification for Gray Iron Casting for Valves, Flanges, and Pipe Fittings.
   3. A276 - Standard Specification for Stainless Steel Bars and Shapes.
   4. A536 - Standard Specification for Ductile Iron Castings.
   5. B584 - Standard Specification for Copper Alloy Sand Castings for General Application.

D. National Electrical Manufacturers Association (NEMA):
   1. 250 - Enclosures for Electrical Equipment (1000 V Maximum).

### 1.03 SUBMITTALS

A. Submit as specified in Section 01330 - Submittal Procedures.

B. Product data: As specified in Section 15110 - Common Work Results for Valves.

C. Commissioning submittals:
   1. Backflow preventer certification.
   2. Provide Manufacturer’s Certificate of Installation and Functionality Compliance as specified in Section 01756 - Commissioning.

### 1.04 WARRANTY

A. Provide warranty as specified in Section 01785 - Warranties and Bonds.

## PART 2 PRODUCTS

### 2.01 BACKFLOW PREVENTERS

A. Manufacturers: One of the following or equal:
   1. Febco backflow prevention:
      a. Model LF860 all sizes.
   2. Zurn/Wilkins:
      a. Model 975XL for 1/2-inch through 2-inch.
      b. Model 375AST for sizes 2 1/2 inch, 3 inch, 8 inch, and 10 inch.
      c. Model 375 and 375DA for sizes 4 inch and 6 inch.
   3. Watts regulator: Series LF909.

B. Design: Reduced pressure chamber type in accordance with AWWA C511.

C. Include shutoff valves at each end of backflow preventer with properly located test cocks.

D. Shutoff valves:
   1. Backflow preventers 2-inch and smaller: Provide with full-port, quarter turn, resilient seated ball valves.
   2. Backflow preventers larger than 2-inch: Provide with resilient seated, outside stem and yoke gate valves.

### 2.02 SOLENOID VALVES

A. 2-way solenoid valves:
   1. Manufacturers: One of the following or equal:
      a. Automatic Switch Co., Series 8210:
         1) Contractor shall provide external bypass to solenoid valve. External bypass shall use pipe of same material and size as main line and include a ball valve for manual operation.
      b. Skinner Electric Valve Division, Series C.

B. Design:
   1. Valves: Suitable for service under the following conditions:
      a. Fluid: 3 Water, 1 Water (potable water).
      b. Temperature of fluid: 60 to 80°F degrees Fahrenheit.
      c. Piping test pressure: 150 pounds per square inch gauge.
   2. Unless otherwise indicated on the Drawings, provide valves that meet the following requirements:
      a. Minimum NEMA Type 4X enclosure.
      b. 120 VAC operation.
      c. Suitable for use as indicated on the Drawings.
      d. Minimum Class F coil insulation.
   3. 2-way valves: Furnish with openings of size equal to or larger than the nominal size designation of the valve.
   4. Furnish with manual/bypass operators.

C. Materials:
   1. Body: Brass or bronze.
   2. Seats: Resilient material.

## 2.03 CORPORATION STOPS

A. Type: In accordance with AWWA C800:
   1. Manufacturers: One of the following or equal:
      a. Ford.
      b. Mueller Co.

## 2.04 CURB STOPS

A. Manufacturers: One of the following or equal:
   1. Ford.
   2. Mueller Co.

B. Description: Round way solid tee head stops.

## 2.05 COCKS

A. Gauge cock:
   1. Manufacturers: The following or equal:
      a. Lunkenheimer Co., Figure 1178 or Figure 1180.

B. Air cock:
   1. Manufacturers: One of the following or equal:
      a. Swagelok, Model B-42S4.
      b. Hoke, Inc., 7122G4B.

C. Plug cock:
   1. Manufacturers: The following or equal:
      a. Lunkenheimer Co., Figure 454.
   2. Design: Plug cocks: Bronze, straightway pattern complete with lever.

# PART 3 EXECUTION

## 3.01 INSTALLATION

A. Install as specified in Section 15110 - Common Work Results for Valves in accordance with manufacturer's published instructions.

B. Backflow preventers:
   1. Install with a minimum clearance of 12 inches and with maximum clearance of 30 inches between the relief port and the floor or finished grade.
   2. Install with sufficient side clearance for access for testing and maintenance.

## 3.02 COMMISSIONING

A. As specified in Section 01756 - Commissioning and this Section.

B. Manufacturer services:
   1. Provide certificates:
      a. Manufacturer's Certificate of Installation and Functionality Compliance.
   2. Manufacturer's Representative onsite requirements:
      a. For the following valves:
         1) Backflow preventer
      b. Installation: 1 trip, 1 day minimum.
      c. Functional Testing: 1 trips, 1 day minimum each.
      d. Training:
         1) Maintenance: 2 hours per session, 2 sessions.
         2) Operations: 2 hours per session, 2 sessions.
   3. Backflow preventer:
      a. Test witnessing: Witnessed.
      b. Conduct pressure and leak test as specified in Section 15110 - Common Work Results for Valves.
      c. Backflow preventer certification.

END OF SECTION

# SECTION 15120

# PIPING SPECIALTIES

## PART 1 GENERAL

### 1.01 SUMMARY

A. Section includes:
   1. Piping specialties, including:
      a. Transition fittings.
      b. Pipe saddles.
      c. Tapping sleeves.
      d. Chemical Injector/Diffuser.
      e. Rubber expansion joints.

### 1.02 REFERENCES

A. American Society of Mechanical Engineers (ASME):
   1. B16.5 - Pipe Flanges and Flanged Fittings: NPS 1/2 through NPS 24, Metric/Inch Standard.

B. American Water Works Association (AWWA):
   1. C110 - Standard for Ductile-Iron and Gray-Iron Fittings.
   2. C151 - Standard for Ductile-Iron Pipe, Centrifugally Cast.

C. ASTM International (ASTM):
   1. A148 - Standard Specification for Steel Castings, High-Strength, for Structural Purposes.
   2. A193 - Standard Specification for Alloy-Steel and Stainless Steel Bolting for High Temperature or High Pressure Service and Other Special Purpose Applications.
   3. A194 - Standard Specification for Carbon Steel, Alloy Steel, and Stainless Steel Nuts for Bolts for High Pressure or High Temperature Service, or Both.
   4. A536 - Standard Specification for Ductile Iron Castings.

### 1.03 SUBMITTALS

A. Product data:
   1. For each piping product in this Section as applicable:
      a. Design features.
      b. Load capacities.
      c. Material designations by UNS alloy number or ASTM Specification and Grade.
      d. Data needed to verify compliance with the Specifications.
      e. Catalog data.
      f. Clearly mark Submittal information to show specific items, materials, and accessories or options being furnished.

B. Installation instructions:
   1. Provide manufacturer's installation instructions.

C. Manufacturer's Certificate of Installation.

## 1.04 WARRANTY

A. As specified in Division 01.

# PART 2 PRODUCTS

## 2.01 TRANSITION FITTINGS

A. Manufacturers: One of the following or equal:
   1. Spears.

B. Materials:
   1. Slip socket: Schedule 80 PVC.
   2. Collar: Type 316 stainless steel.
   3. Threaded insert: Type 316 stainless steel.

## 2.02 PIPE SADDLES

A. For PVC C900 or C905 pipe:
   1. Manufacturers: One of the following or equal:
      a. Romac Industries, Inc., Style 202S.
      b. Smith-Blair, Inc., Style 317.
   2. Materials:
      a. Pipe saddles: Ductile iron with fusion bonded epoxy finish.
      b. Straps, bolts, and nuts: Type 316 stainless steel with Teflon™ coating on nuts.
      c. Gaskets: EPDM.

## 2.03 TAPPING SLEEVES

A. Manufacturers: One of the following or equal:
   1. Romac Industries, Inc., Style FTS 420.
   2. Smith-Blair, Inc., Style 622.

B. Materials:
   1. Tapping sleeves: Steel construction.
   2. Bolts and nuts: Type 316 stainless steel.
   3. Nuts: Teflon™ coated.
   4. Gaskets: EPDM.
   5. Size of tapped boss: As indicated on the Drawings.

## 2.04 CHEMICAL INJECTOR/DIFFUSER

A. Design:
   1. Chemical injector/diffuser:
      a. Injector configuration: Single feed point into center of water main.
      b. Operating pressure: 23 psi.
   2. Stainless steel ball valve:
      a. Thread connection shall be NPT or AWWA inlet.
      b. Corporation stop must include a safety device to prevent accidental withdrawal of Injection/Diffuser solution tube.
   3. Injector/diffuser solution tube sized to match pump discharge line or injection flow rate:
      a. Tube shall extend 1/3- to 1/2-diameter of water main into center of main.
      b. Able to safely withdraw or insert injector/diffuser tube into center of water main while under pressure and without having to shut down the main.
      c. Ball check valve located on injector/diffuser solution tube.
      d. Stainless steel safety chain located on injector/diffuser solution tube.

B. Materials:
   1. Injector/Diffuser: Compatible with chemical solution.

C. Manufacturers: The following or equal:
   1. Saf-T-Flo.

## 2.05 RUBBER EXPANSION JOINTS

A. Manufacturers: One of the following or equal:
   1. Mercer Rubber Co., Style 502.
   2. Proco Products, Inc., Model 262R.
   3. Red Valve Co., Inc., Type J-1 double arch.

B. Provide rubber expansion joints complete with control units and split retaining rings (stiffener rings) on the mating flanges.

C. Design:
   1. Provide lateral deflection of 1-inch minimum.
   2. Neoprene rubber, reinforced with embedded steel rings, and a strong synthetic fabric.
   3. Expansion rings, suitable for pressures of at least 125 pounds per square inch gauge, except as follows:
      a. Ends of expansion joints: 150 pound ASME flanges with drilling to match that of the piping.
   4. Bolts, nuts, control rods/plates, and retaining rings shall be Type 316 stainless steel in accordance with ASTM A193, Grade B8M for bolts, and in accordance with ASTM A194, Grade 8M, for nuts.

## 2.06 DELIVERY, STORAGE, AND HANDLING

A. As specified in Division 01.

## PART 3 EXECUTION

### 3.01 GENERAL

A. Drawings supersede conflicts with this Section.

### 3.02 INSTALLATION

A. Transition couplings:
   1. Application:
      a. Use with function and design similar to flexible couplings and flanged coupling adapters for connecting piping having different outside diameters.
   2. Install products specifically designed and manufactured for that application.

B. Pipe saddles:
   1. Coat threads on bolts with anti-gall coating prior to installation.

C. Tapping sleeves:
   1. Verify existing pipe material and outer diameter prior to ordering materials.
   2. Coat threads on bolts with anti-gall coating prior to installation.

### 3.03 FIELD QUALITY CONTROL

A. Field testing:
   1. As specified in Section 15052 - Common Work Results for General Piping.

END OF SECTION

# SECTION 15125

# STRAINERS

## PART 1 GENERAL

### 1.01 SUMMARY

A. Section includes: Strainers.

### 1.02 REFERENCES

A. ASTM International (ASTM):
   1. A126 - Standard Specification for Gray Iron Castings for Valves, Flanges, and Pipe Fittings.
   2. A420 - Standard Specification for Piping Fittings of Wrought Carbon Steel and Alloy Steel for Low-Temperature Service.

B. Society of Automotive Engineers (SAE).

### 1.03 SUBMITTALS

A. Product data: As specified in Section 15052 - Common Work Results for General Piping.

## PART 2 PRODUCTS

### 2.01 BASKET TYPE STRAINERS

A. Provide basket type strainers single or duplex as indicated on the Drawings.

B. Materials:
   1. Bodies: PVC.
   2. Baskets: PVC.

C. Pressure rating: Where not otherwise indicated on the Drawings, 125 pounds per square inch gauge, minimum.

D. Connections: Threaded or flanged, as required.

E. Covers:
   1. For strainers 6 inches and smaller in size, secured by yokes or similar quick opening devices.
   2. Provide lifting eyes on covers weighing more than 50 pounds.

F. Baskets:
   1. Screen: Mesh or perforated sheet.
   2. Openings: Not greater than 1/8 inch.

3. Free area: Not less than 30 percent.
4. Free area to pipe ratio: Not less than 3.

G. Manufacturers: One of the following or equal:
1. Single basket strainers:
a. Fluid Engineering, Series 528B.
b. Mueller Steam Specialty.
2. Basket strainers for chemical service:
a. Hayward.
b. Dual or simplex as indicated on the Drawings; baskets and bodies PVC; gaskets Viton or EPDM as required for the chemical service; basket mesh size to be specified by the Engineer during shop drawing review.

## PART 3 EXECUTION

### 3.01 INSTALLATION

A. Install in accordance with the manufacturer's recommendations.

END OF SECTION

# SECTION 15230

# PLASTIC PIPING AND TUBING

## PART 1 GENERAL

### 1.01 SUMMARY

A. Section includes: Plastic pipe, tubing, and fittings for systems that are not plumbing systems.

### 1.02 REFERENCES

A. American Society of Mechanical Engineers (ASME):
   1. B16.12 - Cast Iron Threaded Drainage Fittings.

B. ASTM International (ASTM):
   1. D1248 - Standard Specification for Polyethylene Plastics Extrusion Materials For Wire and Cable.
   2. D1784 - Standard Specification for Rigid Poly(Vinyl Chloride) (PVC) Compounds and Chlorinated Poly(Vinyl Chloride) (CPVC) Compounds.
   3. D1785 - Standard Specification for Poly(Vinyl Chloride) (PVC) Plastic Pipe, Schedules 40, 80 and 120.
   4. D1869 - Standard Specification for Rubber Rings for Asbestos-Cement Pipe.
   5. D2412 - Standard Test Method for Determination of External Loading Characteristics of Plastic Pipe by Parallel-Plate Loading.
   6. D2466 - Standard Specification for Poly(Vinyl Chloride) (PVC) Plastic Pipe Fittings, Schedule 40.
   7. D2467 - Standard Specification for Poly(Vinyl Chloride) (PVC) Plastic Pipe Fittings, Schedule 80.
   8. D2513 - Standard Specification for Thermoplastic Gas Pressure Pipe, Tubing and Fittings.
   9. D2564 - Standard Specification for Solvent Cements for Poly(Vinyl Chloride) (PVC) Plastic Piping Systems.
   10. D2665 - Standard Specification for Poly(Vinyl Chloride) (PVC) Plastic Drain, Waste, and Vent Pipe and Fittings.
   11. D2855 - Standard Practice for the Two-Step (Primer and Solvent Cement) Method of Joining Poly (Vinyl Chloride) (PVC) or Chlorinated Poly (Vinyl Chloride) (CPVC) Pipe and Piping Components with Tapered Sockets.
   12. D3034 - Standard Specification for Type PSM Poly(Vinyl Chloride) (PVC) Sewer Pipe and Fittings.
   13. D3212 - Standard Specification for Joints for Drain and Sewer Plastic Pipes Using Flexible Elastomeric Seals.
   14. D3261 - Standard Specification for Butt Heat Fusion Polyethylene (PE) Plastic Fittings for Polyethylene (PE) Plastic Pipe and Tubing.
   15. D3350 - Standard Specification for Polyethylene Plastic Pipes and Fittings Materials.
   16. D4101 - Standard Specification for Polypropylene Injection and Extrusion Materials.

17. F438 - Standard Specification for Socket-Type Chlorinated Poly(Vinyl Chloride) (CPVC) Plastic Pipe Fittings, Schedule 40.
18. F439 - Standard Specification for Chlorinated Poly(Vinyl Chloride) (CPVC) Plastic Pipe Fittings, Schedule 80.
19. F441 - Standard Specification for Chlorinated Poly(Vinyl Chloride) (CPVC) Plastic Pipe, Schedules 40 and 80.
20. F477 - Standard Specification for Elastomeric Seals (Gaskets) for Joining Plastic Pipe.
21. F493 - Standard Specification for Solvent Cements for Chlorinated Poly(Vinyl Chloride) (CPVC) Plastic Pipe and Fittings.
22. F645 - Standard Guide for Selection, Design and Installation of Thermoplastic Water-Pressure Piping Systems.
23. F679 - Standard Specification for Poly(Vinyl Chloride) (PVC) Large-Diameter Plastic Gravity Sewer Pipe and Fittings.
24. F714 - Standard Specification for Polyethylene (PE) Plastic Pipe (SDR-PR) Based on Outside Diameter.

C. American Water Works Association (AWWA):
1. C900 - Standard for Polyvinyl Chloride (PVC) Pressure Pipe and Fabricated Fittings, 4 Inches to 12 Inches, for Water Transmission Distribution.

D. NSF International (NSF).

E. Plastics Pipe Institute (PPI):
1. TR 31 - Underground Installation of Polyolefin Piping.

## 1.03 ABBREVIATIONS

A. ABS: Acrylonitrile-butadiene-styrene.

B. CPVC: Chlorinated polyvinyl chloride.

C. DR: Dimension ratio.

D. DWV: Drain, waste, and vent.

E. HDPE: High-density polyethylene.

F. ID: Inside diameter of piping or tubing.

G. NPS: Nominal pipe size followed by the size designation.

H. NS: Nominal size of piping or tubing.

I. PE: Polyethylene.

J. PP: Polypropylene.

K. PVC: Polyvinyl chloride.

L. SDR: Standard dimension ratio; the outside diameter divided by the pipe wall thickness.

## 1.04 SUBMITTALS

A. Product data: As specified in Section 15052 - Common Work Results for General Piping.

B. Shop Drawings:
   1. Describe materials, pipe, fittings, gaskets, and solvent cement.
   2. Installation instructions.

## 1.05 QUALITY ASSURANCE

A. Mark plastic pipe with nominal size, type, class, schedule, or pressure rating, manufacturer and all markings required in accordance with ASTM and AWWA standards.

## 1.06 DELIVERY, STORAGE, AND HANDLING

A. Protect piping materials from sunlight, scoring, and distortion.

B. Do not allow surface temperatures on pipe and fittings to exceed 120 degrees Fahrenheit.

# PART 2 PRODUCTS

## 2.01 MATERIALS

A. Extruding and molding material: Virgin material containing no scrap, regrind, or rework material except where permitted in the referenced standards.

B. Fittings: Same material as the pipe and of equal or greater pressure rating, except that fittings used in drain, waste, and vent piping systems need not be pressure rated.

C. Unions 2-1/2 inches and smaller: Socket end screwed unions. Make unions 3 inches and larger of socket flanges with 1/8-inch full-face soft EPDM gasket.

## 2.02 PVC PIPING, SCHEDULE TYPE

A. Materials:
   1. PVC Pipe: Designation PVC 1120 in accordance with ASTM D1785 and appendices:
      a. Pipe and fittings: Extruded from Type I, Grade 1, Class 12454 material in accordance with ASTM D1784.
      b. PVC Pipe: Schedule 80 unless otherwise indicated on the Drawings.
   2. Fittings:
      a. Supplied by pipe manufacturer.
      b. Pressure fittings: In accordance with ASTM D2467.
      c. DWV fittings: In accordance with ASTM D2665.
      d. Use long radius elbows for all digested sludge pipe.

3. Solvent cement: In accordance with ASTM D2564:
   a. Chemical service: For PVC pipe in chemical service, provide the following primer and cement, or equal:
      1) Primer: IPS Corp., Type P70.
      2) Cement: IPS Corp., Type 724 cement or another cement certified by the manufacturer for chemical service.

## 2.03 TUBING

A. Application: polymer hose.

B. Small bore tubing: Flexible virgin PVC braided polyester reinforced hose.
   1. Plastic tubing ID as follows:

| Inner Diameter (inches) | Outer Diameter (inches) |
|---|---|
| 0.25 | 0.44 |
| 0.31 | 0.53 |
| 0.38 | 0.59 |
| 0.5 | 0.75 |
| 0.62 | 0.89 |
| 0.75 | 1.03 |
| 1.00 | 1.03 |
| 1.25 | 1.62 |
| 1.50 | 1.94 |
| 2.00 | 2.49 |

C. Fittings: Compression fittings, Dekoron E-Z; or equal.

D. Plug-in fittings for connection to instruments: Brass quick-connect fittings.

## 2.04 SOURCE QUALITY CONTROL

A. PVC piping, Schedule Type:
   1. Mark pipe and fittings in accordance with ASTM D1785.

# PART 3 EXECUTION

## 3.01 INSTALLATION

A. General:
   1. Where not otherwise specified, install piping in accordance with ASTM F645, or manufacturer's published instructions for installation of piping, as applicable to the particular type of piping.
   2. Provide molded transition fittings for transitions from plastic to metal or IPS pipe. Do not thread plastic pipe.

3. Locate unions where indicated on the Drawings, and elsewhere where required for adequate access and assembly of the piping system.
4. Provide serrated nipples for transition from plastic pipe to rubber hose.

B. Installation of PVC piping, Schedule Type:
1. Solvent weld joints in accordance with ASTM D2855:
   a. For PVC pipe in chemical service use IPS Corp., Type 724 cement in accordance with manufacturer's instructions.
2. Install piping in accordance with manufacturer's published instructions.
3. Test pipe as specified in Section 15052 - Common Work Results for General Piping and Section 15956 - Piping Systems Testing.

END OF SECTION

# SECTION 15956

# PIPING SYSTEMS TESTING

## PART 1 GENERAL

### 1.01 SUMMARY

A. Section includes: Test requirements for piping systems.

### 1.02 REFERENCES

A. National Fuel Gas Code (NFGC).

B. American Society of Mechanical Engineers (ASME):
   1. B31.1 - Power Piping.
   2. B31.3 - Process Piping.
   3. B31.8 - Gas Transmission and Distribution Piping Systems.

C. Underwriters Laboratories Inc. (UL).

### 1.03 TESTING REQUIREMENTS

A. General requirements:
   1. Testing requirements are stipulated in Laws and Regulations; are included in the Piping Schedule in Section 15052 - Common Work Results for General Piping; are specified in the specifications covering the various types of piping; and are specified in this Section.
   2. Requirements in Laws and Regulations supersede other requirements of Contract Documents, except where requirements of Contract Documents are more stringent, including higher test pressures, longer test times, and lower leakage allowances.
   3. Test plumbing piping in accordance with Laws and Regulations, the plumbing code, and UL requirements.
   4. When testing with water, the specified test pressure is considered to be the pressure at the lowest point of the piping section under test:
      a. Lower test pressure as necessary (based on elevation) if testing is performed at higher point of the pipe section.

B. Furnish necessary personnel, materials, and equipment, including bulkheads, restraints, anchors, temporary connections, pumps, water, pressure gauges, and other means and facilities required to perform tests.

C. Water for testing, cleaning, and disinfecting:
   1. Water for testing, cleaning, and disinfecting will be provided as specified in Section 01500 - Staging.

D. Pipes to be tested: Test only those portions of pipes that have been installed as part of this Contract. Test new pipe sections prior to making final connections to existing

piping. Furnish and install test plugs, bulkheads, and restraints required to isolate new pipe sections. Do not use existing valves as test plug or bulkhead.

E. Unsuccessful tests:
   1. Where tests are not successful, correct defects or remove defective piping and appurtenances and install piping and appurtenances that comply with the specified requirements.
   2. Repeat testing until tests are successful.

F. Test completion: Drain and leave piping clean after successful testing.

G. Test water disposal: Dispose of testing water at the Headworks Return Box (northern half) in accordance with requirements of federal, state, county, and city regulations governing disposal of wastes in the location of the Project and disposal site. All requirements and costs associated with notifications and obtaining any discharge permit or approvals shall be responsibility of Contractor.

## 1.04 SUBMITTALS

A. Schedule and notification of tests:
   1. Submit a list of scheduled piping tests by noon of the working day preceding the date of the scheduled tests.
   2. Notification of readiness to test: Immediately before testing, notify Engineer in writing of readiness, not just intention, to test piping.
   3. Have personnel, materials, and equipment specified in place before submitting notification of readiness.

## 1.05 SEQUENCE

A. Clean piping before pressure or leak tests.

B. Test gravity piping underground, including sanitary sewers, for visible leaks before backfilling and compacting.

C. Underground pressure piping may be tested before or after backfilling when not indicated or specified otherwise.

D. Backfill and compact trench, or provide blocking that prevents pipe movement before testing underground piping with a maximum leakage allowance.

E. Test underground piping before encasing piping in concrete or covering piping with slab, structure, or permanent improvement.

# PART 2 PRODUCTS (NOT USED)

## PART 3 EXECUTION

### 3.01 TESTING ALIGNMENT, GRADE, AND DEFLECTION

A. Alignment and grade:
   1. Visually inspect the interior of gravity piping with artificial light, reflected light, or laser beam.
   2. Consider inspection complete when no broken or collapsed piping, no open or poorly made joints, no grade changes that affect the piping capacity, or no other defects are observed.

B. Deflection test:
   1. Pull a mandrel through the clean piping section under test.
   2. Perform the test not sooner than 30 days after installation and not later than 60 days after installation.
   3. Use a 9-rod mandrel with a contact length of not less than the nominal diameter of the pipe within 1 percent plus or minus.
   4. Consider test complete when the mandrel can be pulled through the piping with reasonable effort by 1 person, without the aid of mechanical equipment.

### 3.02 TESTING HIGH-HEAD PRESSURE PIPING

A. Test piping for which the specified test pressure in the Piping Schedule is 20 pounds per square inch gauge or greater, by the high head pressure test method, indicated "HH" in the Piping Schedule.

B. General:
   1. Test connections, hydrants, valves, blowoffs, and closure pieces with the piping.
   2. Do not use installed valves for shutoff when the specified test pressure exceeds the valve's maximum allowable seat differential pressure. Provide blinds or other means to isolate test sections.
   3. Do not include valves, equipment, or piping specialties in test sections if test pressure exceeds the valve, equipment, or piping specialty safe test pressure allowed by the item's manufacturer.
   4. During the performance of the tests, test pressure shall not vary more than plus or minus 5 pounds per square inch gauge with respect to the specified test pressure.
   5. Select the limits of testing to sections of piping. Select sections that have the same piping material and test pressure.
   6. When test results indicate failure of selected sections, limit tests to piping:
      a. Between valves.
      b. Between a valve and the end of the piping.
      c. Less than 500 feet long.
   7. Test piping for minimum 2 hours for visible leaks test and minimum 2 hours for the pressure test with maximum leakage allowance.

C. Testing procedures:
   1. Fill piping section under test slowly with water while venting air:
      a. Use potable water for all potable waterlines and where noted on the Piping Schedule.

2. Before pressurizing for the tests, retain water in piping under slight pressure for a water absorption period of minimum 24 hours.
3. Raise pressure to the specified test pressure and inspect piping visually for leaks:
   a. Consider visible leakage testing complete when no visible leaks are observed.

D. Pressure test with maximum leakage allowance:
1. Leakage allowance is zero for piping systems using flanged, National Pipe Thread threaded and welded joints.
2. Pressure test piping after completion of visible leaks test.
3. For piping systems using joint designs other than flanged, threaded, or welded joints, accurately measure the makeup water necessary to maintain the pressure in the piping section under test during the pressure test period:
   a. Consider the pressure test to be complete when makeup water added is less than the allowable leakage and no damage to piping and appurtenances has occurred.
   b. Successful completion of the pressure test with maximum leakage allowance shall be achieved when the observed leakage during the test period is equal or less than the allowable leakage and no damage to piping and appurtenances has occurred.
   c. When leakage is allowed, calculate the allowable leakage by the following formula:

      $L = S \times D \times P^{1/2} \times 148{,}000^{-1}$

      wherein the terms shall mean:

      L = Allowable leakage in gallons per hour.

      S = Length of the test section in feet.

      D = Nominal diameter of the piping in inches.

      P = Average observed test pressure in pounds per square inches gauge, at the lowest point of the test section, corrected for elevation of the pressure gauge.

      x = The multiplication symbol.

## 3.03 TESTING LOW-HEAD PRESSURE PIPING

A. Test piping for which the specified test pressure is less than 20 pounds per square inch gauge, by the low head pressure test method, indicated "LH" in the Piping Schedule.

B. General:
1. Test pressures shall be as scheduled in Section 15052 - Common Work Results for General Piping.

2. During the performance of the tests, test pressure shall not vary more than plus or minus 2 pounds per square inch gauge with respect to the specified test pressure.
3. Test connections, blowoffs, vents, closure pieces, and joints into structures, including existing bell rings and other appurtenances, with the piping.
4. Test piping for minimum 2 hours for visible leaks test and minimum 2 hours for the pressure test with maximum leakage allowance.

C. Visible leaks test:
1. Subject piping under test to specified pressure measured at the lowest end.
2. Fill piping section under test slowly with water while venting air:
   a. Use potable water for all potable waterlines and where noted on the Piping Schedule.
3. Before pressurizing for the tests, retain water in piping under slight pressure for the water absorption period of minimum 24 hours.
4. Raise pressure to the specified test pressure and inspect piping visually for leaks. Consider testing complete when no visible leaks are observed.

D. Pressure test with maximum leakage allowance:
1. Pressure test piping after completion of visible leaks test.
2. Accurately measure the makeup water necessary to maintain the pressure in the piping section under test during the pressure test period:
   a. Consider the pressure test to be complete when makeup water added is less than the allowable leakage of 80 gallons per inch of nominal diameter, per mile of piping section under test after 24 hours, and no damage to piping and appurtenances has occurred.
   b. Successful completion of the leakage test shall have been achieved when the observed leakage is equal or less than the allowable leakage and no damage to piping and appurtenances has occurred.

E. Optional joint test:
1. When joint testing is allowed by note in the Piping Schedule, the procedure shall be as follows:
   a. Joint testing will be allowed only for low head pressure piping.
   b. Joint testing does not replace and is not in lieu of any testing of the piping system or trust restraints.
2. Joint testing may be performed with water or air.
3. Joint test piping after completion of backfill and compaction to the top of the trench.
4. Joint testing with water:
   a. Measure test pressure at the invert of the pipe. Apply pressure of 4 feet plus the inside diameter of the pipe in water column within 0.20 feet in water column.
   b. Maintain test pressure for 1 minute.
   c. Base the allowable leakage per joint on 80 gallons per inch nominal diameter, per mile of piping, per 24 hours equally distributed to the actual number of joints per mile for the type of piping.

d. Consider the pressure test to be complete when makeup water added is less than the allowable leakage.
e. Successful completion of the joint test with water shall have been achieved when the observed leakage is equal or less than the allowable leakage.

5. Joint testing with air:
   a. Apply test pressure of 3 pounds per square inch gauge with a maximum variation of plus 0.20 and minus 0.00 pounds per square inch.
   b. Maintain test pressure for 2 minutes.
   c. Consider the pressure test to be complete when the test pressure does not drop below 2.7 pounds per square inch for the duration of the test.

END OF SECTION

# SECTION 15958

# MECHANICAL EQUIPMENT TESTING

## PART 1 GENERAL

### 1.01 SUMMARY

A. Section includes: Testing of mechanical equipment and systems.

### 1.02 REFERENCES

A. American National Standards Institute (ANSI):
   1. S1.4 Specification for Sound Level Meters.

B. Hydraulic Institute (HI).

C. National Institute of Standards and Technology (NIST).

### 1.03 SUBMITTALS

A. Provide Source Test Plans.

B. Provide Installation and Functional Testing Plans.

C. Provide vendor operation and maintenance manual.

## PART 2 PRODUCTS (NOT USED)

## PART 3 EXECUTION

### 3.01 GENERAL

A. Commissioning of equipment as specified in:
   1. This Section.
   2. Equipment sections:
      a. If testing requirements are not specified, provide Level 1 Tests.

B. Test and prepare piping as specified in Section 15956 - Piping Systems Testing.

C. Provide necessary test instrumentation that has been calibrated within 1 year from date of test to recognized test standards traceable to the NIST or approved source:
   1. Properly calibrated field instrumentation permanently installed as a part of the Work may be utilized for tests.
   2. Prior to testing, provide signed and dated certificates of calibration for test instrumentation and equipment.

D. Test measurement and result accuracy:
   1. Use test instruments with accuracies as recommended in the appropriate referenced standards. When no accuracy is recommended in the referenced standard, use 1 percent or better accuracy test instruments:
      a. Improved (lower error tolerance) accuracies specified elsewhere prevail over this general requirement.
   2. Do not adjust results of tests for instrumentation accuracy:
      a. Measured values and values directly calculated from measured values shall be the basis for comparing actual equipment performance to specified requirements.

## 3.02 VARIABLE SPEED EQUIPMENT TESTS

A. Establish performance over the entire speed range and at the average operating condition.

B. Establish performance curves for the following speeds:
   1. The speed corresponding to the rated maximum capacity.
   2. The speed corresponding to the minimum capacity.
   3. The speed corresponding to the average operating conditions.

## 3.03 PUMP TESTS, ALL LEVELS OF TESTING

A. Test in accordance with the following:
   1. Applicable HI Standards.
   2. This Section.
   3. Equipment sections.

B. Test tolerances: In accordance with appropriate HI Standards, except the following modified tolerances apply:
   1. From 0 to plus 5 percent of head at the rated design point flow.
   2. From 0 to plus 5 percent of flow at the rated design point head.
   3. No tolerance for head and flow when ranges are specified.
   4. No negative tolerance for the efficiency at the rated design point, and other specified conditions.
   5. Use of specified test tolerances shall not result in motor overload while operating at any point on the supplied pump operating head-flow curve, including runout.
   6. No positive tolerance for vibration limits. Vibration limits and test methods in HI Standards do not apply, use limits and methods specified in this or other Sections of the Specifications.

## 3.04 DRIVERS TESTS

A. Test motors as specified in Section 16000 - Requirements for Electrical Work.

B. Test other drivers as specified in the equipment section.

## 3.05 NOISE REQUIREMENTS AND CONTROL

A. Perform noise tests in conjunction with vibration test analysis.

B. Make measurements in relation to reference pressure of 0.0002 microbar.

C. Make measurements of emitted noise levels on sound level meter meeting or exceeding ANSI S1.4, Type II.

D. Set sound level meter to slow response.

E. Unless otherwise specified, maximum free field noise level not to exceed 85 dBA measured as sound pressure level at 3 feet from the equipment.

## 3.06 PRESSURE TESTING

A. Hydrostatically pressure test pressure containing parts at the appropriate standard or code required level above the equipment component specified design pressure or operating pressure, whichever is higher.

## 3.07 INSPECTION AND BALANCING

A. Statically and dynamically balance each of the individual rotating parts as required to achieve the required field vibration limits.

B. Statically and dynamically balance the completed equipment rotating assembly and drive shaft components.

C. Furnish copies of material and component inspection reports including balancing reports for equipment system components and for the completed rotating assembly.

D. Critical speed of rotating equipment:
   1. Satisfy the following:
      a. The first lateral and torsional critical speed of all constant, variable, and 2-speed driven equipment that is considered rigid such as horizontal pumps, all non-clog pumps, blowers, air compressors, and engines shall be at least 25 percent above the equipment's maximum operating speed.
      b. The first lateral and torsional critical speed of all constant, variable, and 2-speed driven equipment that is considered flexible or flexibly mounted such as vertical pumps (vertical in-line and vertical non-clog pumps excluded) and fans shall at least 25 percent below the equipment's lowest operating speed.
      c. The second lateral and torsional critical speed of all constant, variable, and 2-speed equipment that is considered flexible or flexibly mounted shall be at least 25 percent above the maximum operating speed.

E. Vibration tests:
   1. Definitions:
      a. Root mean square: for pumps operating at speeds greater than 600 rpm, the vibration measurement shall be measured as the overall velocity in inches per second root mean square (RMS).
      b. Peak-to-peak displacement: The root means squared average of the peak-to-peak displacement multiplied by the square root of 2.
      c. Peak velocity: The root mean squared average of the peak velocity multiplied by the square root of 2.

d. Peak acceleration: The root mean squared average of the peak acceleration multiplied by the square root of 2.
e. High frequency enveloping: A process to extract very low amplitude time domain signals associated with impact or impulse events such as bearing or gear tooth defects and display them in a frequency spectrum of acceleration versus frequency.
    1) Manufacturers: One of the following or equal:
        a) Rockwell Automation, Entek Group, "Spike Energy" analysis.
        b) CSI, "PeakVue."
f. Rotor bar pass frequency (RBF), for detecting loose rotor bars.
g. Low speed equipment: Equipment or components of equipment rotating at less than 600 revolutions per minute.
h. High speed equipment: Equipment and equipment components operating at or above 600 revolutions per minute.
i. Preferred operating range: Manufacturer’s defined preferred operating range (POR) for the equipment.
j. Allowable operating range: Manufacturer’s defined allowable operating range (AOR) for the equipment.

2. Vibration instrumentation requirements:
    a. Analyzers: Use digital type analyzers or data collectors with anti-aliasing filter, 12-bit A/D converter, fast fourier transform circuitry, phase measurement capability, time wave form data storage, high-frequency enveloping capabilities, 35 frequency ranges from 21 to 1,500,000 cycles per minute, adjustable fast fourier transform resolution from 400 to 6,400 lines, storage for up to one hundred 3,200 line frequency spectra, data output port, circuitry for integration of acceleration data to velocity or double integration to displacement:
        1) Manufacturers: One of the following or equal:
            a) Computational Systems Inc., (CSI) Division of Emerson Process Management, Model 2120A, Data Collector/analyzer with applicable analysis software.
            b) Pruftechnik, VIBXPERT II.
    b. Analyzer settings:
        1) Units: English, inches/second, mils, and gravitational forces.
        2) Fast fourier transform lines: Most equipment 1,600 minimum; for motors, enough lines as required to distinguish motor current frequencies from rotational frequencies, use 3,200 lines for motors with a nominal speed of 3,600 revolutions per minute; 3,200 lines minimum for High Frequency Enveloping; 1,600 lines minimum for low speed equipment.
        3) Sample averages: 4 minimum.
        4) Maximum frequency (Fmax): 40 times rotational frequency for rolling element bearings, 10 times rotational frequency for sleeve bearings.
        5) Amplitude range: Auto select but full scale not more than twice the acceptance criteria or the highest peak, whichever is lower.
        6) Fast fourier transform windowing: Hanning Window.
        7) High pass filter: Minus 3 dB at 120 cycles per minute for high speed equipment. Minus 3 dB at 21 cycles per minute for low speed equipment.

c. Accelerometers:
   1) For low speed equipment: Low frequency, shear mode accelerometer, 500 millivolts per gravitational force sensitivity, 10 gravitational force range, plus/minus 5 percent frequency response from 0.5 hertz to 850 hertz, magnetic mount:
      a) Manufacturers: One of the following or equal:
         (1) Wilcoxon Research, Model 797L.
         (2) PCB, Model 393C.
   2) For high speed equipment: General purpose accelerometer, 100 millivolts per gravitational force sensitivity, 50 gravitational force range, plus/minus 3dB frequency response range from 2 hertz to 12,000 hertz when stud mounted, with magnetic mount holder:
      a) Manufacturers: One of the following or equal:
         (1) Wilcoxon Research, Model 793.
         (2) Entek-IRD Model 943.

3. Accelerometer mounting:
   a. Use magnetic mounting or stud mounting.
   b. Mount on bearing housing in location with best available direct path to bearing and shaft vibration.
   c. Remove paint and mount transducer on flat metal surface or epoxy mount for High Frequency Enveloping measurements.
4. Vibration acceptance criteria:
   a. Testing of rotating mechanical equipment: Tests are to be performed by an experienced, factory trained, and independent authorized vibration analysis expert.
   b. Vibration displacement limits: Unless otherwise specified, equipment operating at speeds 600 revolutions per minute or less is not to exhibit unfiltered readings in excess of following:

| **Operating Conditions and Application Data** | **Overall Peak-to-Peak Displacement** | |
|---|---|---|
| | **Field, mils** | **Factory, mils** |
| **Operation within the POR** | 3.0 | 4.0 |
| **Operation within the AOR** | 4.0 | 5.0 |
| Additive value when measurement location is greater than 5 feet above foundation. | 2.0 | 2.0 |
| Additive value for solids-handling pumps | 2.0 | N/A |
| Additive value for slurry pumps | 2.0 | N/A |

   c. Equipment operation: Measurements are to be obtained with equipment installed and operating within capacity ranges specified and without duplicate equipment running.
   d. Additional criteria:
      1) No narrow band spectral vibration amplitude components, whether sub-rotational, higher harmonic, or synchronous multiple of running speed, are to exceed 40 percent of synchronous vibration amplitude component without manufacturer's detailed verification of origin and ultimate effect of such excitation.

2) The presence of discernable vibration amplitude peaks in Test Level 2 or 3 vibration spectra at bearing inner or outer race frequencies shall be cause for rejection of the equipment.
3) For motors, the following shall be cause for rejection:
   a) Stator eccentricity evidenced by a spectral peak at 2 times electrical line frequency that is more than 40 percent of the peak at rotational frequency.
   b) Rotor eccentricity evidenced by a spectral peak at 2 times electrical line frequency with spectra side bands at the pole pass frequency around the 2 times line frequency peak.
   c) Other rotor problems evidenced by pole pass frequency side bands around operating speed harmonic peaks or 2 times line frequency side bands around rotor bar pass frequency or around 2 times the rotor bar pass frequency.
   d) Phasing problems evidenced by 1/3 line frequency side band spectral peaks around the 2 times electrical line frequency peak.
4) The presence of peaks in a High Frequency Enveloping spectra plot corresponding to bearing, gear or motor rotor bar frequencies or harmonics of these frequencies shall be cause for rejection of the equipment; since inadequate lubrication of some equipment may be a cause of these peaks, lubrication shall be checked, corrected as necessary and the high frequency envelope analysis repeated.

5. Vibration testing results presentation:
   a. Provide equipment drawing with location and orientation of measurement points indicated.
   b. For each vibration measurement take and include appropriate data on equipment operating conditions at the time vibration data is taken; for pumps, compressors, and blowers record suction pressure, discharge pressure, and flow.
   c. When Vibration Spectra Data required:
      1) Plot peak vibration velocity versus frequency in cycles per minute.
      2) Label plots showing actual shaft or part rotation frequency, bearing inner and outer race ball pass frequencies, gear mesh frequencies and relevant equipment excitation frequencies on the plot; label probable cause of vibration peaks whether in excess of specification limits or not.
      3) Label plots with equipment identification and operating conditions such as tag number, capacity, pressure, driver horsepower, and point of vibration measurement.
      4) Plot motor spectra on a log amplitude scale versus frequency.
   d. For low speed equipment, plot peak vibration displacement versus frequency as well as velocity versus frequency.
   e. Provide name of manufacturer and model number of the vibration instrumentation used, including analyzer and accelerometer used together with mounting type.

## 3.08 TESTING LEVELS

A. Level 1 Tests:
   1. Level 1 Performance Test:
      a. General:
         1) For equipment, operate, rotate, or otherwise functionally test for 15 minutes minimum after components reach normal operating temperatures.
         2) Operate at rated design load conditions.
         3) Confirm that equipment is properly assembled.
         4) Confirm the equipment moves or rotates in the proper direction.
         5) Confirm shafting, drive elements, and bearings are installed and lubricated in accordance with proper tolerances.
         6) Confirm that no unusual power consumption, lubrication temperatures, bearing temperatures, or other conditions are observed.
      b. Pumps:
         1) Comply with general performance test requirements as specified in this Section.
         2) Measure flow and head while operating at or near the rated condition; for factory testing, testing may be at reduced speeds with flow and head corresponding to the rated condition when adjusted for speed using the appropriate affinity laws:
            a) Use of a test driver is permitted for factory tests when actual driver is given a separate test at its point of manufacture as specified in Section 16000 - Requirements for Electrical Work or the applicable equipment section.
            b) Use actual driver for field tests.
         3) Record measured flow, suction pressure, discharge pressure, and make observations on bearing temperatures and noise levels.
   2. Level 1 Vibration Test:
      a. Test requirement:
         1) Measure filtered vibration spectra versus frequency in 3 perpendicular planes at each normally accessible bearing housing on the driven equipment, any gears and on the driver; 1 plane of measurement to be parallel to the axis of rotation of the component.
         2) Vibration spectra versus frequency shall be in accordance with Vibration Acceptance Criteria.
      b. Equipment operating condition: Test at specified maximum speed.
   3. Level 1 Noise Test:
      a. Measure unfiltered overall A-weighted sound pressure level in dBA at 3 feet horizontally from the surface of the equipment and at a mid-point of the equipment height.

B. Level 2 Tests:
   1. Level 2 Performance Test:
      a. General:
         1) For equipment, operate, rotate, or otherwise functionally test for at least 2 hours after components reach normal operating temperatures.
         2) Operate at rated design load conditions.

3) Confirm that equipment is properly assembled.
4) Confirm the equipment moves or rotates in the proper direction.
5) Confirm shafting, drive elements, and bearings are installed and lubricated in accordance with proper tolerances.
6) Confirm that no unusual power consumption, lubrication temperatures, bearing temperatures, or other conditions are observed.

b. Pumps:
1) Comply with general performance test requirements as specified in this Section.
2) Test 2 hours minimum for flow and head at the rated condition; for factory testing, testing may be at a reduced speeds with flow and head corresponding to the rated condition when adjusted for speed using the appropriate affinity laws:
a) Use of a test driver is permitted for factory tests when actual driver is given a separate test at its point of manufacture as specified in Section 16000 - Requirements for Electrical Work.
b) Use actual driver for field tests.
3) Test for flow and head at 2 additional conditions; 1 at 25 percent below the rated flow and 1 at 10 percent above the rated flow.
4) Record measured flow, suction pressure, discharge pressure, and observations on bearing temperatures and noise levels at each condition.

2. Level 2 Vibration Test:
a. Test requirement:
1) Measure filtered vibration spectra versus frequency and measure vibration phase in 3 perpendicular planes at each normally accessible bearing housing on the driven equipment, any gears and on the driver; 1 plane of measurement to be parallel to the axis of rotation of the component; measure actual rotational speeds for each vibration spectra measured using photometric or other tachometer input connected directly to the vibration data collector.
2) Vibration spectra versus frequency shall be in accordance with Vibration Acceptance Criteria.

b. Equipment operating condition: Repeat test requirements at design specified maximum speed and at minimum speed for variable speed equipment.

c. Natural frequency test of field installed equipment:
1) Excite the installed equipment and support system in 3 perpendicular planes, use same planes as operating vibration measurement planes, and determine the as-installed natural resonant frequency of the driven equipment, the driver, gears, and supports.
2) Perform test at each bearing housing, at each support pedestal, and for pumps on the suction and discharge piping.
3) Perform with equipment and attached piping full of intended service or process fluid.

3. Level 2 Noise Test:
   a. Measure filtered A-weighted overall sound pressure level in dBA for each of 8 octave band mid-points beginning at 63 hertz measured at 3 feet horizontally from the surface of the equipment at mid-point height of the noise source.

END OF SECTION

# SECTION 16000
# REQUIREMENTS FOR ELECTRICAL WORK

## PART 1 GENERAL

### 1.1 DESCRIPTION

A. This section specifies electrical work including labor, electrical material, equipment, and installation and testing requirements for complete operating system. Electrical work shall also include demolition and or relocation and modifications of existing electrical equipment as shown and specified in these specifications. All equipment requiring power and or control shall include equipment furnished under this section and other sections of the specifications. The electrical drawings included in this project document are diagrammatic only and functional in nature and do not specify exact locations of equipment or equipment terminations.

B. Majority of the required work involves relocation of the existing Screw Press and its control panel. The existing control panel shall be modified and upgraded with new components and relocated at new location as shown on the drawings.

### 1.2 QUALITY ASSURANCE

A. References: This section contains references to the following documents. They are a part of this section as specified and modified. In case of conflict between the requirements of this section and those of the listed documents, the requirements of this section shall prevail.

B. Unless otherwise specified, references to documents shall mean the documents in effect at the time of Advertisement for Bids or Invitation to Bid (or on the effective date of the Agreement if there were no Bids). If referenced documents have been discontinued by the issuing organization, references to those documents shall mean the replacement documents issued or otherwise identified by that organization or, if there are no replacement documents, the last version of the document before it was discontinued. Where document dates are given in the following listing, references to those documents shall mean the specific document version associated with that date, whether or not the document has been superseded by a version with a later date, discontinued or replaced.

| Reference | Title |
|---|---|
| ANSI A58.1 | Minimum Design Loads for Building and Other Structures |
| IEEE 81 | Measuring Earth Resistivity, Ground Impedance, and Earth Surface Potentials of a Ground System |
| IEEE C57.12.01 | General Requirements for Dry-Type Distribution and Power Transformers |
| NEMA 250 | Enclosures for Electrical Equipment (1000 Volt Maximum) |

| Reference | Title |
|---|---|
| NEMA ICS 1 | General Standards for Industrial Controls and Systems |
| NEMA ICS 2 | Industrial Control Devices, Controllers, and Assemblies |
| NEMA ICS 6 | Enclosures for Industrial Controls and Systems |
| NEMA ST20 | Dry-Type Transformers for General Application |
| NEMA WD 1 | General Requirements for Wiring Devices |
| NFPA 70 | National Electrical Code (NEC) |
| CBC | California Building Code |
| UL 50 | Enclosures for Electrical Equipment |
| UL 62 | Flexible Cords and Cables |
| UL 67 | Panelboards |
| UL 489 | Molded-Case Circuit Breakers and Circuit Breaker Enclosures |
| UL 506 | Specialty Transformers |
| Ul 508A | Standard for Industrial Control Panel |

C. Identification of Listed Products: Electrical equipment and materials shall be listed by an independent testing laboratory for the purpose for which they are to be used. Three such organizations are Underwriters Laboratories, Inc. (UL), Canadian Standards Association (CSA), and Electrical Testing Laboratories (ETL). The independent testing laboratory shall be acceptable to the inspection authority having jurisdiction.

1.3 SUBMITTALS

A. The following specific submittal requirements for the switchgear, switchboard, motors, transformers, power distribution panels and starters or VFD's shall be followed:

1. Contractor shall formally place an order with equipment manufacturer within thirty days of the award of the contract. The order shall include all relevant drawings and specs including any addendum items associated with the equipment.

2. Contractor shall submit shop drawings to the District as soon as possible or within 6 weeks of the order being placed for long lead items such as standby generator.

3. Contractor shall forward review comments to equipment manufacturer within two days after receipt of the comments by the District.

4. Contractor shall provide the release for manufacturing to equipment manufacturer within 3 business days of receiving a favorably reviewed submittal and shall provide the District with the shipping date.

5. Prior to shipment, a factory test of the equipment witnessed by the District shall occur.

C. The following information shall be provided for all electrical equipment and materials in accordance with Section 01330:

1. Verification of fault withstands and interrupting ratings of all applicable power equipment and devices.

2. Interconnection diagrams -The Contractor shall prepare interconnection diagrams depicting all cable requirements together with their actual terminations as specified below.

   Interconnection diagrams shall be drawn to reflect actual, physical relationship between equipment and or components as shown on the drawings. The interconnection diagram shall indicate wiring between panels, terminal boxes, remotely mounted devices, and motor starters. The diagrams shall interface with the manufacturer's internal connection diagrams for panels. The diagrams shall indicate the terminations to terminal blocks of field devices at each end of the cable, the number of conductors in the cable, the size of wire, and the number of spare conductors. For each termination, the diagrams shall indicate the terminal number, wire color, and wire number as it appears on the wire marker. All terminal blocks, including spares, shall be indicated on the diagrams. Interconnection diagrams shall be provided for review and approval prior to installation of equipment.

3. Catalog-cuts including technical specifications, application information, ratings, make and model number, and other information required to verify the equipment and/or material meets the requirements of this specification.

4. A copy of this specification section with addenda updates, and all referenced sections with addenda updates, with each paragraph check marked to show specification compliance or marked to show deviations.

1.4 PROJECT/SITE CONDITIONS

A. General: Unless otherwise specified, equipment and material shall be sized and rated for an ambient temperature of 40 degrees C at an elevation ranging from sea level to 100 feet without exceeding the manufacturer's stated ratings. All outdoor locations shall be considered as corrosive areas. Enclosures for outdoors, unless otherwise noted, shall be NEMA 4X, 316 stainless steel.

B. Seismic: All electrical equipment and supports shall be braced in accordance with latest California Building Code.

1.5 ELECTRIC SERVICE

Electric service for this facility is existing and provided by Pacific Gas and Electric Company. No direct contact with PG&E is required in this project. Coordination with the District's staff is however required.

Refer to Section 01140- Work Restrictions for general sequence of work and project constraints. General electrical sequence of work is part of the general sequence and is as shown on the drawings.

## PART 2 PRODUCTS

2.1 GENERAL

Equipment and materials shall be new and free from defects. All equipment of the same or similar type shall be of the same manufacturer throughout the work. Standard production materials shall be used wherever possible.

2.2 RACEWAY, FITTINGS, AND SUPPORTS

A. General: Conduit shall be provided for power, control, instrumentation, grounding, lighting, receptacles, and signaling systems.

B. Raceway:

1. All exposed conduit, indoor and outdoor, shall be threaded, PVC-coated galvanized, rigid steel conduit. All conduit accessories such as couplings, elbows, junction boxes etc. shall also be PVC-coated galvanized steel. Minimum size of conduit shall be 3/4 inch. All conduit supports shall be 316 SS. Bushings shall be galvanized, malleable iron with insulating collars. Grounding bushings shall be locking type with a feed through compression lug. Unions shall be galvanized, ferrous alloy type. Threadless fittings are not acceptable. Running threads shall not be used in lieu of conduit nipples. Threaded hubs shall be used to terminate conduits entering boxes. PVC-coated RGS conduit shall be manufactured by Robroy Industries, Perma-Cote Industries, or equal.

2. Liquidtight, flexible steel conduit shall be formed from spirally wound, galvanized steel strip with successive convolutions securely interlocked and jacketed with liquidtight, plastic cover. Minimum size shall be 3/4 inch. Fittings for liquidtight conduit shall have cadmium-plated, malleable iron body and gland nut with cast-in lug, brass grounding ferrule threaded to engage conduit spiral and O-ring seals around the conduit and box connection and insulated throat. Forty-five and 90-degree fittings shall be used where applicable.

3. Embedded or encased underground conduit where used shall be Schedule 40, high impact, polyvinyl chloride (PVC). Minimum size shall be 1 inch.

4. Fittings for PVC conduit shall be solvent welded type.

C. Device Boxes:

1. Boxes for use outdoors and in process areas shall be hot-dip, galvanized cast ferrous alloy type FD with integrally cast-threaded hubs for conduit entry. Boxes larger than FD boxes shall be welded steel and hot-dip galvanized after fabrication. Use PVC-coated boxes where PVC-coated RGS conduits are used.

2. Boxes installed in areas where electrical metallic tubing is specified shall be standard UL approved electrogalvanized sheet steel, 4-inch square or octagon minimum trade size. In this project EMT and related accessories are prohibited.

3. Conduit bodies shall be ferrous alloy type with screw taps for fastening covers. Gaskets shall be made of neoprene.

4. Boxes for hazardous locations as indicated on the drawings shall be suitable for Class 1 Div I hazardous location. They shall be corrosive resistant, high tensile strength malleable iron and with threaded aluminum cover. They shall be manufactured by Crouse-Hinds, Appleton Electric, or equal.

D. Raceway Supports: 316 Stainless steel framing channels shall be used to support groups of conduit. Individual conduit supports shall be one-hole stainless steel malleable iron pipe straps with stainless steel clamp backs and nesting backs where required. Ceiling hangers shall be adjustable, stainless steel rod hangers. Straps or plumbers tape are not acceptable. Hanger rods shall be 1/2-inch all thread stainless steel rod.

E. Concrete Pull Boxes: Provide and install pre-cast concrete pull boxes in locations indicated on the Drawings and as required by NEC. Pull boxes shall be:

1. Designed for heavy traffic conditions, with pull box and cover designed for heavy traffic bridge loading H-20

2. Minimum 2 feet by 3 feet by 3 feet depth with ¾ inch diameter pulling irons located at each end. Concrete material shall be reinforced Class A. Larger size box shall be as shown on the drawings.

3. Provided with engraved “Electrical” or “Instrumentation” or “Telephone” as applicable on the top side of the covers.

F. Ceiling or wall mounted pull boxes: These boxes shall be made of 316 stainless steel materials 10 gauge sheet metal suitable for wall or ceiling mounting indoors and outdoors. Bottom of boxes shall be hinged with latch. Boxes shall be fully secured with SS supports and or straps to resist seismic activities. Provide barriers as needed for customized boxes accepting both analog signals and power circuits.

## 2.3 CONDUCTORS, WIRE, AND CABLE

A. General: Conductors, wires, and cable shall be provided for power, control, lighting, receptacles, instrumentation, grounding and signal circuits. The quantity and size of conductors shall be as specified.

B. Power and Control Conductors: Power and control conductors shall be single conductor, stranded, annealed copper with 600-volt THWN/THHN polyvinyl chloride (PVC) insulation, Okonite, Okoseal-N; CABLEC; or equal.

C. Lighting and Receptacle Circuit Conductors: Conductors for lighting and receptacle circuits shall be single conductor, annealed copper with 600-volt THWN/THHN PVC insulation. Conductor sizes No. 10 AWG and larger shall be stranded. No. 12 AWG shall be solid conductor. Minimum conductor size shall be No. 12 AWG. Conductors shall be Okonite, Okoseal-N; CABLEC; or equal.

D. Grounding Conductors: Grounding conductors shall be as specified in paragraph 16000-2.7 A.

E. Instrumentation and Signal Cable: Cable for instrumentation and signal circuit shall be twisted shielded pair or triad as specified, No. 16 AWG 7-strand copper with 600-volt PVC insulation, 100 percent aluminum-Mylar tape shield, No. 18 AWG tinned copper drain wire and overall PVC jacket, Okonite, Okoseal-N type P-OS, CABLEC, or equal.

F. Splicing and Terminating Materials:

1. Connectors: Connectors for stranded conductors shall be tool applied tin-plated copper, compression type of the correct size and UL approved for the application.

   Connectors for wire sizes No. 10 AWG and smaller shall be nylon self-insulated, ring tongue or locking-spade terminals. Connectors for wire sizes No. 8 AWG and larger shall be one-hole lugs up to size No. 3/0 AWG and two-hole or four-hole for size 4/0 AWG and larger. Mechanical clamp, dimple, or screw-type connectors are not acceptable.

   480-volt motor terminations shall be made using bolt connected lugged connectors and factory engineered kits consisting of heat shrinkable, polymeric insulating material with high dielectric strength mastic sealant.

   Termination of solenoid valves, 120-volt motors, and other devices furnished with pigtail leads shall be made using self-insulating, tubular compression connectors.

2. Terminal Blocks: Terminal blocks shall be provided for external control and power wires size 10 AWG and smaller. Terminal blocks shall be 600 volts, heavy-duty, rated 20 amperes for control and 30 amperes for power.

G. Wire Markers: Wire markers shall be yellow or white shrink tubing, Thermofit Marker System (TMS) by Raychem Co., Thomas and Betts equivalent, or equal for conductors No. 10 AWG and smaller and locking tab cable markers, W.H. Brady Co., Thomas and Betts, or equal, for conductors No. 8 and larger. Letters and numbers identifying each conductor shall be machine printed in permanent black ink.

## 2.4 WIRING DEVICES

A. General: Receptacles, plugs, switches, and appurtenances shall be provided as specified on the drawings. Wiring devices shall be UL approved for the current and voltage specified and shall comply with NEMA WD-1. Receptacles and switches shall

be premium, specification grade. GFI type in weather proof cover/box shall be provided for all outdoor receptacles.

B. Receptacles: Receptacles shall be 20A, 120V, and grounding type. Receptacles for use outdoors and in wet process areas shall be corrosion resistant, GFI type, marine duty with polycarbonate weatherproof lift covers, Hubbell 53CM62/ 53CM21, General Electric, or equal.

C. Switches: Switches for use outdoors and in wet process areas shall be 20 amp, press-switch type with weatherproof, corrosion-resistant neoprene plate, Hubbell, Arrow-Hart, or equal. Switches located in classified hazardous locations shall be suitable for installation in such locations. They shall be made by Killard Hazloc Series, Appleton, Crouse-Hinds , or equal.

2.5 INDIVIDUAL MOTOR STARTERS

A. General: Unless otherwise specified, individual motor starters shall be combination type with molded case motor circuit protector, 3-pole, 600-volt AC contactor, and three overload relays, NEMA size 1 minimum. Each motor starter shall be individually enclosed. Starters shall be manufactured by Cutler-Hammer, Allen-Bradley, General Electric, or equal.

B. Enclosures: The door of the motor starter enclosure shall be interlocked with an externally operated disconnect handle, lockable in the open position. Enclosures shall be NEMA 12 for dry indoor areas and NEMA 4X 316 SS for outdoor and wet process areas.

C. Motor Branch Circuit Protection: Molded case motor circuit protectors shall be magnetic only with trip settings adjustable over a range of 700 to 1300 percent of the full load current of the motor served. The motor circuit protector, in conjunction with the starter, shall be rated to interrupt 42,000 amperes (symmetrical) unless otherwise specified.

D. Overload Relay: Overload relays shall be bimetallic type with separate heaters for each of the three poles. Reset shall be accomplished with a reset pushbutton located on the unit door exterior. Trip setting shall be adjustable from 85 to 115 percent of the motor full load rating.

E. Control Circuits: Control power transformers, fuses, and control devices shall be provided as specified. Two control transformer primary fuses, rated to interrupt 200,000 amperes at 600 volts, shall be provided on all motor starters. Each motor starter shall be provided with one control circuit secondary fuse rated to interrupt 10,000 amperes at 250 volts and sized at 125 percent of the control circuit full load current. Control circuit shall be 120 V with grounded leg.

F. Wiring: Conductors shall be switchboard type and rated 90 degrees C above ambient temperature. Conductor shall be identified with tag numbers as specified.

G. Manual Starters: Manual starters shall be provided as indicated on the drawings. Manual starters shall consist of a horsepower rated quick-make, quick-break toggle mechanism together with one or two overloads as specified. Voltage shall be as specified. Indoor and dry location shall be NEMA 12. For outdoor and wet process area, they shall be NEMA

4X 316 SS corrosive resistant. For classified hazardous locations, they shall be rated for such locations and shall be manufactured by Square D, General Electric, or equal.

2.6 ELECTRICAL CONTROL DEVICES

A. Control Devices:

1. PUSHBUTTONS: Pushbuttons shall be flush head, 30mm diameter, heavy-duty, industrial, 600 volts, 10 amperes, continuous with NEMA rating to match enclosure types. Pushbutton operators shall be red for stop functions and black for all other functions. Escutcheon plates shall be as specified on the drawings. For field mounted pushbuttons, each stop pushbutton shall be provided with a galvanized steel padlockable mechanism. For hazardous locations, the control stations shall be rated as explosion proof suitable for such locations. They shall be Killark Hazloc Series, Appleton, Crouse-Hinds or equal.

2. Selector Switches: Selector switches shall be heavy-duty, 30mm diameter, industrial type, with NEMA rating to match enclosure type, rated 600-volt, 10-ampere, continuous. Switches shall be provided with contact blocks and number of positions as required performing the specified operations. The escutcheon legend shall be as specified on the drawings.

3. Indicating Lights: Indicating lights shall be 30mm diameter, industrial, heavy-duty, push-to-test, transformer type with LED lamps. Indicating lights shall be NEMA rated to match enclosure type. Color of lens shall be as specified.

4. Control Stations: Unless otherwise specified, control stations shall be NEMA 12 or 13 for dry, indoor locations and NEMA 4X for process areas and outdoor locations, Allen Bradley Bulletin 800H, Crouse-Hinds NCS series, or equal.

5. Security (limit switches). Security switches shall be heavy duty, industrial type with adjustable arm, lever made of stainless steel material. Each switch shall have one normally open and one normally closed contact rated for at least 5A at 120VAC. The switches shall be NEMA 4X, and shall be as manufactured by General Electric, Square D, or equal.

6. Thermostats: Thermostat shall be heavy duty, NEMA 4X, 20A 120V rated with dial and indicator suitable for line connection. They shall be manufactured by Dayton, Honeywell, or equal.

B. Control Relays:

1. Load-Switching Control Relays: Control relays used for switching loads (solenoids, actuators, contactors, motor starter coils, etc.) shall be heavy-duty, machine tool type. Relays that have contacts used for remote interlocking or for which the switching load is not shown shall also be heavy-duty machine tool type.

   Contacts shall, as a minimum, be 4-pole and be field interchangeable to either normally open or normally closed. Relay shall be capable of accepting a 4-pole adder.

AC relays shall have NEMA A600 contact ratings and electrical clearances for up to 600 volts. DC relays shall have NEMA P300 contact ratings and electrical clearances of up to 250 volts.

Relays shall be Allen Bradley Bulletin-700, Square D Class 8501, or equal.

2. Logic Level Switching Control Relays: Control relays used for switching solid-state logic and signal circuits shall be Potter Brumfield series KUP, Schrack Series RA, or equal. Relays shall have a minimum of three SPDT, gold-flashed, fine silver contacts rated 3 amps resistive at 120 volts AC or 28 volts DC. Relay shall be plug-in type with heavy-duty, barrier-protected screw terminal sockets and clear polycarbonate dust cover with clip fastener. AC models shall have neon lamp indicator wired in parallel with coil.

3. Timing Relays: Solid state timing relays shall be pulse-count type using a high frequency RC oscillator and integrated circuit counter for timing. Electrolytic capacitors shall not be used in the timing circuits. Time delays from 0.1 seconds to 48 hours shall be available with each timer model adjustable over a 20:1 range. On-delay, off-delay, and single-shot timing models shall be available. Timer shall reset in 0.03 seconds or less. Timer accuracy shall be plus or minus 2.0 percent under normal conditions. The timing relay shall have two NEMA Form-C timed contacts. Solid state timing relays shall be Agastat, STA series, Eagle Signals equivalent, or equal.

4. Intrinsically Safe Relays: These relays shall be suitable for use with 24VDC power source with pilot devices located in hazardous classified locations as defined by NEC Article 500. The relays shall be manufactured by :

   a. R.K Electronics
   b. Gem Sensors Divison of IMO, Inc
   c. R. Stalh, Inc.
   d. Idec
   e. Equal

   Provide each relay with two DPDT contacts each rated for at least 5-amp.

   All float switches located in Class 1 Div I hazardous location shall be provided with intrinsically safe relays located in control panel or where specifically shown on the drawings .

## 2.7 GROUNDING MATERIAL

A. Cable: Grounding cable shall be concentric stranded, annealed bare copper. Cable size shall be as specified, and shall not be smaller than #4/0 AWG.

B. Ground Rods: Ground rods shall be copper-covered steel, 3/4-inch diameter, and 10 feet long. Rods shall have threaded type, removable caps so that extension rods of the same diameter and length may be added where necessary. The rods shall be manufactured by ERICO, Galvan Industries, Inc. or equal.

C. Compression Connectors: Compression connectors shall be cast copper as manufactured by Thomas and Betts, OZ. Gedney, or equal.

D. Bolted Connectors: Bolted connectors shall be Burndy, O.Z. Gedney, or equal.

E. Equipment Grounding: Install a green insulated equipment grounding conductor with each feeder and branch circuit from the power source grounding means to the load equipment or device.

2.8 LIGHTING FIXTURES:

A. General: Unless otherwise specified, lighting materials, including fixtures, accessories and hardware, shall conform with the requirements specified on the applicable LIGHTSPECS in paragraph 16000-3.08 B. Lighting fixtures shall be provided where specified.

Where recessed fixtures are required, the fixture shall be provided with mounting hardware for the ceiling system specified. Catalog numbers given on the applicable LIGHTSPECs shall not be used for selection of mounting hardware, but only as a reference to the type of fixture required. A concealed latch and hinge mechanism shall be provided to permit access to the lamps and ballasts and for removal and replacement of the diffuser without removing the fixture from ceiling panels. Fixtures recessed in concrete shall have protective coating of bituminous paint.

Fixtures shall be aligned and directed to illuminate an area as specified. Fixtures shall be directly and rigidly mounted on their supporting structures. Unless otherwise specified, conduit system shall not be used to support fixtures. Where brackets or supports for lighting fixtures are welded to steel members, the welded area shall be treated with rust-resistant primer and finish paint.

2.9 DISTRIBUTION EQUIPMENT

A. Panelboards: Panelboards shall be circuit breaker, dead front type with bus bar construction. Panelboards shall be composed of individually mounted circuit breakers designed to be removed without disturbing other breakers.

Bus shall be tin-plated copper and shall have a current rating as shown on the panel schedules sized in accordance with UL 67. Panel fault withstand rating shall be equal to the interrupting rating of the smallest circuit breaker in the panel.

Panelboards shall be provided with a separate ground bus and a full capacity neutral bus. Neutral bus shall be mounted on insulated standoffs with removable link connector to ground bus. Provide an inside pocket to hold circuit directory. Panelboards shall be Cutler-Hammer, Allen-Bradley, or equal.

For outdoor locations, provide lighting panels with NEMA 4X 316 SS enclosures with padlockable provisions.

B. Circuit Breakers: Circuit breakers shall be molded-case type provided for the current ratings and pole configurations specified on the panelboard schedule. Circuit breakers rated 120/208 volts and 120/240 volts AC shall have a minimum interrupting current

rating of 22K amperes (symmetrical) at 240 volts AC. Circuit breakers rated 277/480 volts AC shall have a minimum interrupting current rating of 42K amperes (symmetrical) at 480 volts.

Circuit breakers shall be bolt-on type.

Circuit breakers shall be listed in accordance with UL-489 for the service specified. Breakers rated 200A or higher shall be provided with solid-state trip unit with multi-functions.

Load terminals of circuit breakers shall be solderless connectors.

Circuit breakers and panelboards shall be products of the same manufacturer.

C. Dry-type Transformers: Transformers shall conform to IEEE-C57.12.01 and UL 506. The voltage, frequency, number of phases, and KVA rating shall be as specified. Transformers shall have “Energy Star” label as required by latest California Energy Regulations Title 24. They shall be manufactured by Cutler-Hammer, Square D, General Electric, or equal.

Transformers 15 KVA and above shall have a Class 220 insulation system in accordance with NEMA ST20. Transformers 25 KVA and greater shall be designed not to exceed 80 degrees C temperature rise.

Transformer coils shall be copper windings. Aluminum windings shall not be acceptable. Transformer coils 15 KVA and above shall be impregnated with varnish. Transformer coils 10 KVA and below shall be encapsulated.

Transformers shall have electrically isolated primary and secondary windings. Primary and secondary winding configurations shall be as specified. Provisions shall be made to permit separate grounding of the neutral conductor and the enclosure. Single-phase transformers shall be the four winding type.

Transformers 15 KVA and above shall be provided with two 2-1/2 percent full capacity taps above normal voltage and four 2-1/2 percent full capacity taps below rated voltage on the primary winding.

Terminal compartments shall be sized to permit termination of cables specified. Terminal connections shall be made in the bottom third of the enclosure. The terminals shall be copper and sized for the cable specified.

Transformers rated 15 KVA and smaller shall be provided with weatherproof, non-ventilated enclosures.

Indoor transformers rated greater than 15 KVA shall be provided with drip-proof, ventilated enclosures. Outdoor transformers shall have weatherproof enclosures.

## 2.10 NAMEPLATES

Nameplates shall be made from laminated phenolic plastic. The nominal size of the nameplates shall be 3/4 inch high by 2 inches long. Nameplates shall have black

backgrounds with 1/4-inch white letters. If abbreviations are required because of space limitations, abbreviations shall be submitted to the Construction Manager for approval prior to manufacture. Nameplates shall be fastened using self-tapping stainless steel screws. The use of adhesives will not be permitted on the outside of enclosures.

2.11 LIMIT SWITCHES

Limit switches shall be NEMA 4X, corrosive resistant, rated suitable for monitoring door's opening to trigger two DPDT 5A rated contacts. They shall be heavy duty, industrial type made by Allen-Bradley 800 series, Square D or equal.

## PART 3 EXECUTION

3. 1 GENERAL

Unless otherwise detailed or dimensioned, electrical layout drawings are diagrammatic. Actual conduit installation shall be coordinated with field conditions. Junction boxes and pull boxes with quantity as required shall be furnished and installed. The Contractor shall coordinate the location of electrical material and equipment with the work.

Electrical equipment shall be protected from dust, water, and damage.

3.2 RACEWAY, FITTINGS, AND SUPPORTS

A. General: The Contractor shall limit the number of directional changes of conduit to a total of not more than 270 degrees in any run between pull boxes. Conduit runs shall be limited to 400 feet, less 100 feet for each 90-degree change in direction.

Signal conduit shall be separated from AC power and control conduits. The minimum separation shall be 12 inches for rigid steel and 24 inches for PVC conduits.

Tag power, signal and control conduits with stainless steel tag fastened to conduit with stainless steel cable. Tags shall be engraved with identification as designated on the single-line diagrams. Tags shall be installed at each conduit termination to an enclosure, MCC, control panel, disconnect, motor j-box, signal transmitter, sensor etc..

Cap each spare conduit as per detail shown on the drawings.

B. Exposed Conduits: Rigid metallic conduit shall be assembled to provide a continuous ground path. Joints shall be made with standard couplings or threaded unions. Bends and offsets shall be made with a hicky or conduit bending machine or shall be factory preformed bends.

Exposed conduit shall be run on supports spaced not more than 10 feet apart and shall be constructed with runs parallel and perpendicular to walls, structural members, or intersections of vertical planes and ceiling. No conduit shall approach closer than 6 inches to any object operating above 30 degrees C.

Conduit supports shall be secured to concrete walls and ceilings by means of cast-in-place anchors, die cast, rustproof alloy expansion shields, or cast-flush anchors.

Wooden plugs, plastic inserts, or gunpowder driven inserts are not acceptable as a base for securing conduit supports.

Liquidtight, flexible steel conduit shall be used for the final connection to equipment, devices, and instruments where flexibility is required.

The length of liquidtight flexible steel conduit shall not exceed the lesser of 15 times the trade diameter of the conduit or 36 inches.

C. Embedded or Encased Conduit: Conduits constructed in concrete which is in contact with earth shall be separated from earth by at least 3 inches of concrete. Clearances equal to the nominal conduit diameter but not less than 2 inches, shall be maintained between encased or embedded conduits except where conduits cross or terminate.

D. PVC-coated Rigid Galvanized Steel Conduit: All exposed conduits shall be PVC-coated rigid galvanized steel with matching conduit boxes and accessories.

E. “EYS” seals: Install “EYS” seals as required per NEC, and as shown on the drawings for hazardous locations and locations as identified on the drawings. Fill the seals with compound recommended by the seal manufacturer.

3.3 CONDUCTORS, WIRE, AND CABLE

A. General: Raceway construction shall be complete, cleaned, and protected from the weather prior to wire and cable being installed. Pulling wire and cable into conduit shall be completed without damaging or putting undue stress on the cable insulation. Soapstone, Talc, or UL listed pulling compounds are acceptable lubricants for pulling wire and cable. Grease is not acceptable. Nylon pull rope shall be pulled through the conduit immediately after concrete pour.

Each power, control, signal, and instrumentation conductor shall be identified at each terminal to which it is connected utilizing the wire markers specified in paragraph 16000-2.03 G.

600-volt conductors will be color coded as follows:

| 480 V Power | 120/240 Lighting and Receptacles |
|---|---|
| Phase A – Brown | Phase A – Black |
| Phase B – Orange | Phase B – Red |
| Phase C – Yellow | Phase C – Blue |
| Neutral – White | Neutral – White |
| Ground – Green | Ground – Green |

B. 600-Volt Conductor and Cable: Slack shall be provided in junction and pull boxes. Slack shall be sufficient to allow cable or conductors to be routed along the walls of the box.

Conductors crossing hinges shall be bundled in groups not exceeding 12 and shall be so arranged that they will be protected from chaffing when the hinged member is moved.

Raceway fill limitations shall be as defined by NEC and the following:

Lighting and receptacle circuits may be together in the same conduit in accordance with derating requirements of the NEC. However, lighting and receptacle circuits shall not be in conduit with other circuits.

Solid wire shall not be lugged nor shall electrical spring connectors be used on any except for solid wires in lighting and receptacle circuits. Lugs and connectors shall be installed with a compression tool.

C. Signal and Instrumentation Cables: Signal and instrumentation circuits shall be run as individual shield twisted pairs or triads. Triads shall be used wherever three-wire circuits are required. Terminal blocks shall be provided at cable junction for running signal leads and shield drain wires. Each conductor shall be identified at such junctions. Instrumentation cables shall be continuous without any splices.

Shields shall not be used as a ground path.

3.4 WIRING DEVICES

Switches and receptacles for use outdoors and in process areas shall be mounted in "FD" type boxes or PVC-coated boxes in locations specified. Unless otherwise specified, switches shall be mounted 48 inches above the floor. Receptacles shall be mounted 18 inches above the floor in finished areas and 48 inches above the floor in process areas and outdoors unless otherwise specified.

3.5 INDIVIDUAL MOTOR STARTERS

Individual motor starters shall be mounted with the operating mechanism 48 inches above the finished floor unless otherwise specified. The Contractor shall size the overload heater elements to the nameplate full load amperes of the motor served. Motor circuit protectors shall be adjusted to the lowest setting not causing false tripping.

3.6 MISCELLANEOUS CONTROL DEVICES

Control stations shall be mounted 48 inches above the floor unless otherwise specified.

3.7 GROUNDING

Electrical equipment and enclosures, metal surfaces of equipment, and metal structural members shall be grounded. Grounding system shall be provided in compliance with the NEC and as specified on the drawings.

Embedded and buried cable connections shall be made by cast copper compression connectors utilizing diamond or hexagon dies and a hand compression tool for wire sizes 2 AWG and smaller and a hydraulic pump and compression head for wire size 2/0 AWG and larger. Embedded ground cables and fittings shall be securely attached to concrete reinforcing steel with tie wires.

Grounding conductors which extend beyond concrete surfaces for equipment connection shall be extended a sufficient length to reach the final connection point without splicing.

Grounding conductors which project from a concrete surface shall be located as close as possible to a corner of the equipment pad, protected by conduit or terminated in a flush grounding plate.

Exposed ground connections shall be made by bolted connectors. Exposed grounding conductors shall be supported by noncorrosive metallic hardware at 4-foot intervals or less.

Grounding conductors entering enclosures shall be bonded together to the enclosure if it is metallic and to metallic raceway within terminating at the enclosure. Metal surfaces shall be cleaned prior to making grounding connections and bonds.

When install ground rods, field verify exact location of existing underground utilities such as water piping, gas piping, electrical conduits or ductbanks, vault or manholes etc prior to installation of the ground rods to avoid damage to the existing underground utilities.

3.8 LIGHTING FIXTURES

A. General: The location and type of fixtures and receptacles are shown on the drawings. Raceways and wire shall be provided from the fixtures, switches, and receptacles to the lighting panel in accordance with the NEC.

Fixtures labeled to require conductors with a temperature rating exceeding 75 degrees C shall be spliced to circuit conductors in a separately mounted junction box. Fixture shall be connected to junction box using flexible conduit with a temperature rating equal to or greater than that of the fixture.

Labels and marks, except the UL label, shall be removed from exposed parts of the fixtures. Fixtures shall be cleaned when the project is ready for acceptance.

3.9 PANELBOARDS

The contractor shall type in the circuit descriptions on the circuit directory as shown on the final record drawings or panel schedule.

3.10 TESTING

A. General: Prior to energizing the electrical circuits, the tests shall be performed as specified. Unless otherwise specified, a 500-volt megohmmeter shall be used for resistance measurements.

The measurements of the tests shall be recorded on the standard forms indicating that tests were completed and free of unintended grounds or shorts..

B. Insulation Resistance Measurements:

1. General: General insulation resistance measurements shall be made on conductors and energized parts of electrical equipment. Minimum acceptable values of insulation resistance shall be in accordance with the applicable ICEA, NEMA, or ANSI standards for the equipment or material being tested, unless

otherwise specified. The ambient temperature at which insulation resistance is measured shall be recorded on the test form.

2. Conductor and Cable Tests: The phase-to-ground insulation resistance shall be measured for all circuits 120 volts and above except lighting circuits. Measurements may be made with motors and other equipment connected. Insulation resistance measurements shall be recorded and submitted to the Engineer for review and approval. Insulation with resistance of less than 10 megohms is not acceptable.

3. Motor Tests: All motors shall have their insulation resistance measured before they are connected. Motors 50 HP and larger shall have their insulation resistance measured at the time of delivery as well as when they are connected. Insulation resistance values less than 10 megohms are not acceptable.

C. FUNCTIONAL CHECKOUT:

Prior to energization of equipment, the Contractor shall perform a functional checkout of the control circuit. Prior to functional testing, all protective devices shall be adjusted and made operative. Checkout shall consist of energizing each control circuit and operating each control, alarm or malfunction device and each interlock in turn to verify that the specified action occurs. Contractor shall submit a description of his proposed functional test procedures prior to the performance of functional checkout.

The Contractor shall verify that motors are connected to rotate in the correct direction. Verification may be accomplished by momentarily energizing the motor, provided the Contractor confirms that neither the motor nor the driven equipment will be damaged by reverse operation.

3.11 MODIFICATIONS TO EXISTING CONTROL PANEL

Modifications to existing Screw Press Control Panel shall be as specified in specification sections 11384- Dewatering Screw Press System and 13470- SCADA PLC System, and as shown on the drawings.

3.12 RECORD DRAWINGS

Record drawings refer to those documents clearly maintained and annotated by the Contractor during construction include record drawings in accordance with these specifications. Contractor shall submit record drawings that reflect as-installed conditions. Drawings do not conform or do not show as installed conditions shall be rejected and shall be resubmitted by the Contractor for no additional cost to the District until acceptance by the Engineer. Markups for deviations and changes shall be on a full size set of drawings.

3.13 SEQUENCE OF WORK

For general project construction sequence, refer to section 01140- Work Restrictions for details. For electrical work, Contractor shall follow Sequence of Work as specified in Division 1. Submit plan for review and approval two weeks in advance. Follow all

requirements including traffic controls and barricades to provide a safe area for the pedestrians.

SWITCH-OVER STRATEGY

The existing sewage treatment plant shall remain functional while the screw press being relocated.

END OF SECTION

# SECTION 16025
# ELECTRICAL DEMOLITION AND MODIFICATIONS

## PART 1 GENERAL

### 1.1 SCOPE OF WORK

A. Furnish all labor, materials, and incidentals required to demolish, modify and/or remove the electrical and instrumentation systems and equipment as shown on the Drawings or specified herein. All demolition work shall be performed by licensed electricians. All electrical sources shall be field verified to be de-energized prior to demolition work.

B. Unless specifically noted as being reused, all conduit, wire, boxes, etc. detailed on the Drawings shall be new equipment installed under this Work.

C. The electrical modifications and removals work shall consist of, but not necessarily be limited to, removal or modifications of existing equipment in the following generalized categories:

1. Modification of motors, motor starters, panels, lights, outlets and other devices as indicated on the Drawings.

2. Any electrically powered or controlled equipment indicated as being removed in this Contract and associated electrical appurtenances.

3. Existing electrical equipment or electrical equipment associated with mechanical or process equipment which needs to be removed or relocated due to conflicts with new construction.

4. Electrical control devices, starters, wiring, and other miscellaneous devices associated with equipment that will be modified or reused under this Contract.

5. Instrumentation and control equipment and related conduit and wire associated with equipment being removed under this Contract.

### 1.2 RELATED WORK

A. Additional requirements for equipment demolition and salvage are specified in Section 02050 – Demolition

### 1.3 SUBMITTALS

A. All submittals shall be in accordance with specification section 01330.

## PART 2 PRODUCTS (NOT USED)

## PART 3 EXECUTION

### 3.1 EQUIPMENT TO BE REMOVED

A. Only the major electrical and instrumentation equipment to be removed is shown or noted on the Drawings and failure to detail all equipment exactly shall not relieve the Contractor from the responsibility for its removal as directed by the Engineer. Removal items such as wire, conduit, junction boxes, anchorages, etc. are in general not detailed on the Drawings.

B. Where removal of electrical, instrumentation, or any other equipment with wired connections is called for in this Work, the work shall include the removal of the associated electrical hardware as specified herein unless noted otherwise.

C. Unless otherwise noted, all wiring shall be removed from the conduits; boxes and fittings and all exposed conduit shall be removed. Unless specifically noted otherwise, concealed conduits shall be cut flush with the floor, wall, or ceiling and plugged with non-shrink grout.

D. Electrical power, control, or instrumentation equipment, exposed conduit, wiring, etc. rendered inoperative by modifications to existing equipment under these sections or other Divisions of this contract shall be removed unless specifically noted that it is to be abandoned in place.

E. Not all existing conduits are shown on the Drawings. In general, existing conduits are shown only where they may be reused; or where they potentially affect or may be affected by new work under this Contract; or for providing useful background information to the Contractor regarding the existing electrical installation.

F. Where existing conduit or wire associated with removed equipment is to be reused, it will be specifically noted on the Drawings or Conduit and Cable Schedules.

G. No existing conduits, wiring, or electrical appurtenances shall be removed or in any way damaged unless allowed by the provisions of this Section. Any existing conduits or wiring or other electrical appurtenances that are encountered as an obstruction to new construction which are not covered by the provisions of this Specification shall be brought to the attention of the District.

H. Where functions of existing cables or conduits are replaced by new cable or conduits because of additions of new panels, instruments, revision to control strategy, etc., the existing cables and exposed conduits shall be removed unless noted otherwise. Where shown on the drawings, or where terminating in equipment enclosures, concealed conduits shall be retained and marked as spares.

I. Equipment removed shall not be reused under this contract unless specifically noted on the Drawings or Specifications.

J. To minimize disruptions to the existing plant operations, the schedule for modifications and removal of existing equipment shall be coordinated with and approved by the Engineer and District.

K. Where, if applicable, any existing circuits are disconnected due to abandonment or removal of existing equipment, the remaining motor starters or circuit breakers for these circuits shall be retagged as spares. At motor control centers, the tags shall be laminated nameplates matching the existing ones. In circuit breaker panels, the circuit card or listing shall be changed.

L. Demolished and removed equipment, conduit, wire, etc., shall become the property of the Contractor unless specifically noted otherwise on the Drawings or specified in this section. Where specifically shown on the Drawings, selected electrical equipment shall be protected, removed and turned over to the District per the requirements of this section.

3.2 EQUIPMENT SALVAGED

A. The following equipment shall be returned to the District and shall be stored at location on site as directed by the District:

1. Existing radio and antenna

2. Existing light pole that is replaced with new pole.

END OF SECTION

# SECTION 16075
# ELECTRICAL IDENTIFICATION

## PART 1 GENERAL

1.2 SUMMARY

A. Section Includes: Identification of electrical conductors, raceways and equipment, and electrical equipment signs.

B. Related Sections:

1. Section 16000 – Requirements for Electrical Work

1.3 REFERENCES

A. National Electrical Code (NEC):

1. Article 110–22 - Disconnecting Means.
2. Article 210–4 - Multi-wire Branch Circuits.
3. Article 200 - Use and Identification of Grounded Conductors.
4. Article 384 - Switchboards and Panelboards.
5. Article 300 - Wiring Methods.

1.4 SUBMITTALS

A. Shop Drawings:

1. General: Submit Shop Drawings for electrical equipment room layouts, drawn at a minimum at 3/8 inch = 1 foot, scale.
2. Cross Reference: Diagram shall carry a uniform and coordinated set of wire numbers and terminal block numbers to permit cross-referencing between the Contract Document Drawings, the Drawings prepared by the CONTRACTOR, and equipment O&M Manual Drawings.
3. Drawing number cross references and continuation references shall also be provided. Contractor-prepared Drawings shall reference applicable CONTRACTOR Drawings such as P&IDs, control and logic diagrams, interface wiring diagrams, Panel Drawings, etc. Contractor-prepared Drawings shall also reference applicable Drawings provided by equipment manufacturers.
4. On any Drawing prepared for this project, if a wire, circuit, enclosure, panel, or device is continued on another Drawing, the continuation Drawing shall be referenced (and vice-versa). Wherever wires are shown connected to terminals, the Drawings which show the continuation of the circuits on those terminals must be referenced.
5. Interconnection Diagrams: Cables shall not be installed into raceways until the wiring interconnection diagrams are reviewed by the design engineer.
6. Sample schematics and diagrams are indicated on typical detail Drawings for reference and understanding of minimum information required for submittal of

Shop Drawings schematics and diagrams, and submittal of O&M schematics and diagrams.

7. Include tagging system, labels, markers, hazard tape, nameplates, and signs.

B. Product Data: Include tagging system, labels, markers, and hazard tape.

C. Project Record Documents:

1. Document wire, cable, and conductor tags, and bundle tags installed in accordance with the Contract Documents.
2. Document installed wire, cable, and conductor tags and bundle tags when not specifically indicated.
3. Indicate on Record Drawings deviations from accepted Shop Drawing conductor identification.

1.5 QUALITY ASSURANCE

A. Pre-installation Meeting:

1. Conduct in accordance with Section 16000.
2. Purpose: To clearly define requirements specified for circuit/cable/conductor identification, hold a meeting including representatives of CONTRACTOR, DISTRICT, and ENGINEER prior to significant cable or conductor purchase and installation/termination.

## PART 2 PRODUCTS

2.1 LABELS

A. Manufacturers: One of the following or equal:

1. Brady.
2. Seton.

B. Type: Sleeve type.

2.2 CONDUCTOR AND CABLE MARKERS

A. Manufacturers: One of the following or equal:

1. Brady.
2. Seton.

B. Type: Slip-on PVC sleeve or strap-on type.

C. Printed using Brady marker "XC PLUS," or equal.

D. Markers used in tunnels or other wet locations shall be on heat-shrinkable marking sleeves.

E. Use self-laminating vinyl on white background for markers within electrical equipment such as panels, termination cabinets, motor control centers.

F. Use engraved stainless steel tags with circuit designation fastened to direct buried cables in underground pull boxes as detailed on the drawings.

2.3 RACEWAYS IDENTIFICATION (TAGS)

A. Conduit numbers shall be pressure stamped into a non corrosive 2 inch long, 1/2 inch wide stainless steel tape, Dymo marking system or equal. A tag with number shall be fixed with No. 18 AWG or larger type 304 stainless steel wire, to each conduit segment and at the end of each conduit and within 3 feet of each pull box, panelboard, and switchboard.

2.4 NAMEPLATES, LABELS AND SIGNS

A. Nameplates:

1. Type: Black lamicoid with white letters.
2. Fastener: Round head stainless steel screws.

B. Automatic Equipment and High Voltage Warning Signs:

1. Type: Suitable for exterior use and meeting OSHA regulations.

C. Power Pole Labels: Vinyl plastic with details as shown on the drawings.

1. Manufacturers: One of the following or equal:
   a. Brady.
   b. Seton.

D. Underground Hazard Tape: 6 inches wide. Detectable, aluminum with warning wording.

1. Manufacturers: One of the following or equal:
   a. Panduit.
   b. Thomas and Betts.

## PART 3 EXECUTION

3.1 CIRCUIT IDENTIFICATION

A. Identify 3-phase system conductors and cables as Phases A, B, and C and identify 1-phase system conductors and cables at electrical equipment including, but not limited to, switchgear, switchboards, panelboards, motor control centers, and motors.

1. Match DISTRICT’s existing electrical system identification scheme or meet requirements of the authority responsible for the project.
2. 3-phase 480 Volts AC System Conductors: Phase A, brown; Phase B, orange; Phase C, yellow.

3. Single-Phase Conductors for 120/240 VAC Circuits: Phase A, black; Phase B, red; Phase C, blue.
4. Neutral Conductor: White for 120 VAC and gray for 277 VAC.
5. Insulated Equipment Grounding Conductor: Green.
6. General Purpose AC Control Conductors: Violet.
7. General Purpose DC Control Conductors: Violet with white stripes.
8. Where used, identify 15 kilovolt class cables with 3 stripes of color tape specified in item 3 above.
9. Where used, identify 5 kilovolt cable with 2 stripes of color tape specified in item 3 above.

B. Use color coding and phasing consistent throughout the site. Bus bars at panelboards and motor control centers to be connected Phase A-B-C, top to bottom, or left to right facing connecting lugs.

C. Conductors Number 2 American Wire Gauge (AWG) and smaller to be factory color coded with a separate color for each phase and neutral, which shall be used consistently throughout the system. Larger cables to be coded by the use of colored tape.

D. In addition to color coding, for all 1-phase and 3-phase systems, identify each cable (single or multi-conductor) and conductor at each end, in each manhole, pullbox, cable tray, or other component of the raceway system. This identification is applicable to all power, control, alarm, signal, instrumentation cables, and conductors.

E. Identify each cable (single or multi-conductor) and groups or bundles of individual single conductors in each manhole, pullbox, cable tray, or other component of the raceway system with circuit identification markers. Implement a "from-to" cable/conductor bundle tagging system as part of this identification effort.

F. Identify each individual conductor at each termination and in manhole and underground or above ground pull boxes. This includes such locations as switchgear, switchboards, motor control centers, variable frequency drives, control panels, junction/terminal boxes, all field devices, and all other locations where conductors are terminated. Identify the termination of these conductors in accordance with the accepted Shop Drawings. Tag conductors with sleeve type labels.

G. Where more than 1 nominal voltage system exists, identify each ungrounded system conductor by phase and system. Permanently post means of identification at each branch-circuit panelboard, switchboard, switchgear, motor control center, or other type of power distribution equipment.

H. Include the following minimum information for wire and cable identification.

1. Circuit number or load identification tag number as per Conduit Schedule.
2. Origin (from source).
3. Destination (to load).

3.2 NAMEPLATES

A. Furnish and install nameplates for all electrical equipment indicated on the Drawings. Each disconnect, control system, control panel, breaker, switch, panelboard, MCC, switchboard, control panel, etc., shall have nameplate indicating equipment name and circuit designation.

B. Each disconnect means for service, feeder, branch, or equipment conductors and pushbutton stations shall have nameplates indicating its purpose or identifying the load.

C. Each lighting switch and convenience outlet shall have a nameplate indicating its 120VAC power circuit number from lighting panelboard. Nameplate shall be affixed to the faceplate of the device with heavy duty adhesive cement.

3.3 AUTOMATIC EQUIPMENT WARNING

A. Mount permanent warning signs at mechanical equipment which may be started automatically or from remote locations. Fasten warning signs with round head stainless steel screws or bolts, located and mounted in a manner acceptable to ENGINEER.

B. Mount permanent and conspicuous warning signs on (front and back) equipment, doorways to equipment rooms, pull boxes, manholes, where the voltage exceeds 600 volts.

C. Place a warning ribbon or other effective means suitable for conditions above ductbank underground installations.

D. Place warning signs on utilization equipment that has more than one source of power. Provide panel and circuit number of conductor tag of the power source disconnect.

E. Place warning signs on utilization equipment that has 120 VAC control voltage source used for interlocking. Provide panel, circuit number, and conductor tag of control voltage source disconnect.

3.4 CONDUIT TAGS

A. Install conduit tags (engraved stainless steel round tags) at each conduit termination to control panel, MCC, enclosure, disconnect, pull box, junction box etc.. Conduit tag names shall be as per single-line and control one-line diagrams shown on the drawings.

3.5 WARNING FOR PANEL WITH MULTIPLE POWER SOURECES

Install red background with white lettering: “ WARNING!!! THIS PANEL CONTAINS MULITPLE POWER SOURCES WHICH SHALL BE DISCONCETED FROM THE SOURCE, AND SHALL BE FREE OF ANY VOLTAGE PRIOR TO SERVICING THE PANEL”

END OF SECTION

# APPENDIX A

# EXISTING FKC SCREW PRESS SPECIFICATIONS AND SHOP DRAWINGS

## SCREW PRESS SPECIFICATIONS:

| Qty. | Description |
|---|---|
| | FKC Screw Press |
| 1 | Model SHX-900x5000L |

| | |
|---|---|
| Material to be dewatered: | 100% Anaerobically Digested Municipal Sludge |
| Inlet capacity: | a) 4.7 dry tons per 24 hour day (DT/d) at 24±2 % TS outlet<br>b) 5.5 dry tons per 24 hour day (DT/d) at 20% TS outlet<br>c) 7.0 dry tons per 24 hour day (DT/d) w/ outlet to pass Paint Filter Test |
| Inlet consistency: | 2.0 to 2.5 % TS |
| Outlet consistency: | a) 24±2 % TS at 4.7 DT/d inlet with polymer use<br>b) 20% TS at 5.5 DT/d inlet with polymer use<br>c) will pass Paint Filter Test at 7.0 DT/d inlet with polymer use |
| Materials of construction: | Sludge wetted parts: 316 stainless steel<br>Screw shaft: Carbon steel<br>Protective guards: 304 stainless steel<br>Fasters and Hardware: 316 stainless steel<br>Screw Press base: 304 stainless steel<br>Misc parts coated carbon steel |
| Screens: | Perforated 316 stainless steel |
| Speed reducer: | Sumitomo Cyclo Reducer model CHH-6245DA-7569 |
| Coupling: | Main gear coupling between speed reducer and screw shaft: Osaka Seisa GC-SSM 315 |
| Motor: | 3.0 HP, rpm, NEMA B - Suitable for variable speed operation w/ PWM constant torque inverter<br>Top mount motor included. |
| Covers: | Press shall be supplied with spray covers on top and sides |
| Other: | • 1 set safety guards<br>• 1 set washdown showers as shown on submittal drawing<br>• 1 ea flanged filtrate outlet<br>• 1 ea adjustable spring loaded back pressure cone<br>• 1 set metric wrenches<br>• 1 set drum covers w/ side shields<br>• 1 set drive sheaves and belt for top mounted motor<br>• The belt and sheave guards shall be sized to allow for installation of sheaves 15 percent larger and addition of one belt.<br>• 4 spare screens |

## The design flows of the sludge feed are as follows:

| Inlet Solids Content | 392 dry #/hr | 458 dry#/hr | 583 dry #/hr |
|---|---|---|---|
| 2% | 39.1 gpm | 45.8 gpm | 58.3 gpm |
| 2.5% | 31.3 gpm | 36.6 gpm | 46.6 gpm |

## Flushing spray water requirements:

Top header – 55 gpm @ 50 psi intermittent
Bottom headers – 34 gpm @ 50 psi intermittent

## Painting:

Sumitomo Speed Reducer
Surface preparation per gearbox manufacturers' standard
Prime coat – Kansai SD Marine Primer – alkyd iron oxide primer
Finish coat – Shinto Paint Co. – Penforte 600 – synthetic resin type
Field coat - Tnemec 1075 (Endura-Shield II) or equal if required

Bearing Housings, Spring Arbor housings, etc.
Surface preparation per manufacturers' standard
Prime coat - Tnemec N69 (Hi-Build Epoxoline II)
Finish coat – Tnemec 1075 (Endura-Shield II),

NOTES:
The belt and sheave guards shall be sized to allow for installation of sheaves 15 percent larger and addition of one belt

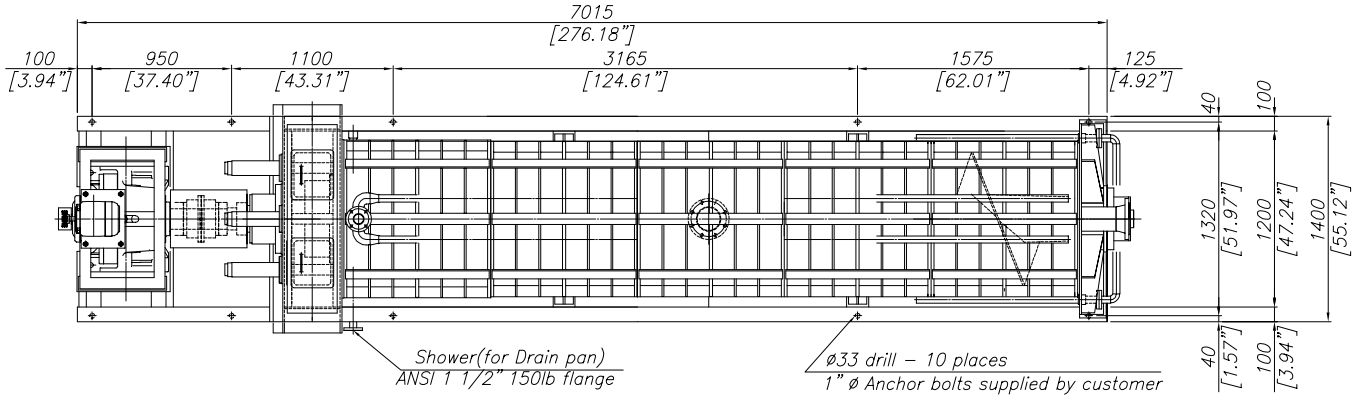


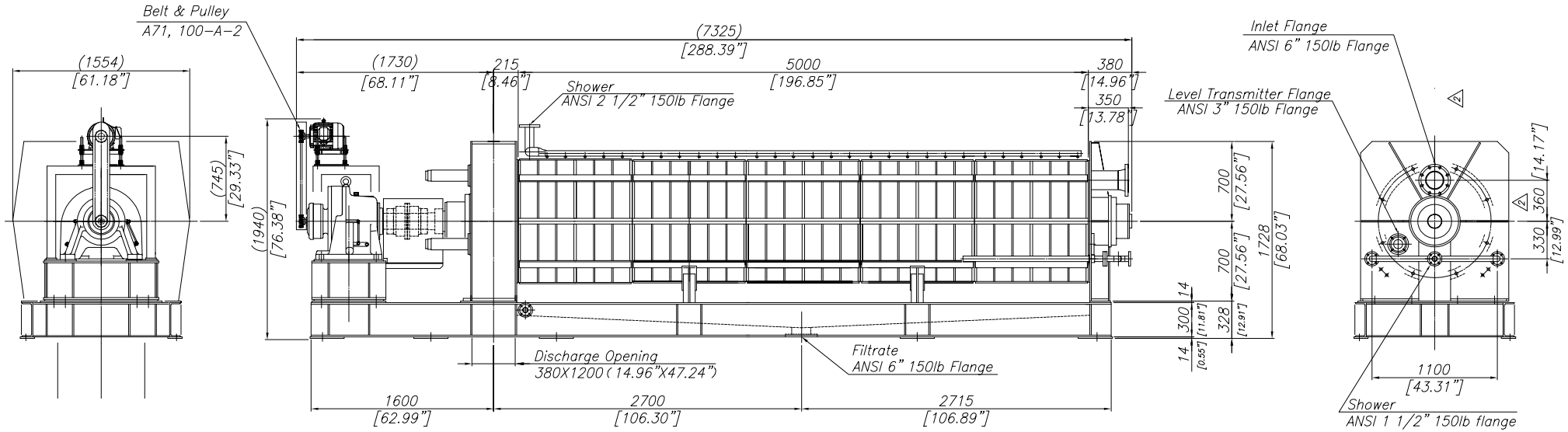


Speed Reducer
CHH–6245DA–7569

Gear coupling
GC–SSM 315

Variable Speed Motor (Supplied by the customer.)
3Hp, 1800rpm (Frame No. 182T)

Total weight = 9,000 kg (19,840 lbs)
Operating weight = 10,500 kg (23,150 lbs)

Screw Rev.
~ 1800 X 1/7569 = ~ 0.238 rpm

| Rev. | Date | Description | Drawn by | Rev. by | Appd. by |
|---|---|---|---|---|---|
| 4 | 6/6/08 | Issued as Certified | | | R.OLSON |
| 3 | 6/16/08 | Inlet flange | S.ENDO | | |
| 2 | 6/6/08 | Issued as Certified | | | R.OLSON |
| 1 | 4/15/08 | Issued for Approval | | | R.OLSON |
| 0 | 4/3/08 | First issue | S.ENDO | H.ABE | T.OGAWA |

| 符号 Mark | 名称 Description | 材質 Material | 数量 Pcs. | 重量 Weight | 備考 Remarks |
|---|---|---|---|---|---|
| 発注先 Purchaser | Messrs. FKC CO.,LTD. | | Quantity 1 | 配布先 貿易部 | . |
| 最終客先 End user | Messrs. City of Sausalito, CA | | Scale | FKC | . |
| 工事名称 Job name | Screw press SHX–900X5000L | | 1/25 | 営業部 | . |
| | | | | QC部 | . |
| | | | | QC ファイル | . |
| 図面名称 Dwg. name | Assembly | | | 製造部 | . |
| | | | | 設計部 | . |
| 工事番号 Job No. | M–2486 | | | 釧路工場 | . |
| | | | | 大阪営業所 | . |
| 図面番号 Dwg. No. | S2486–01 | | Ref. job No. | 富士営業所 | . |
| | | | | 合計 | . |

FKC FUKOKU KOGYO CO., LTD.

NOTE THAT ACTUAL CONDITIONS DIFFER FROM THIS DRAWING. THE HEADBOX (NOT SHOWN) IS ATTACHED THE FLOCCULATION TANK. VERIFY ALL CONDITIONS IN THE FIELD PRIOR TO DISSASSEMBLY.

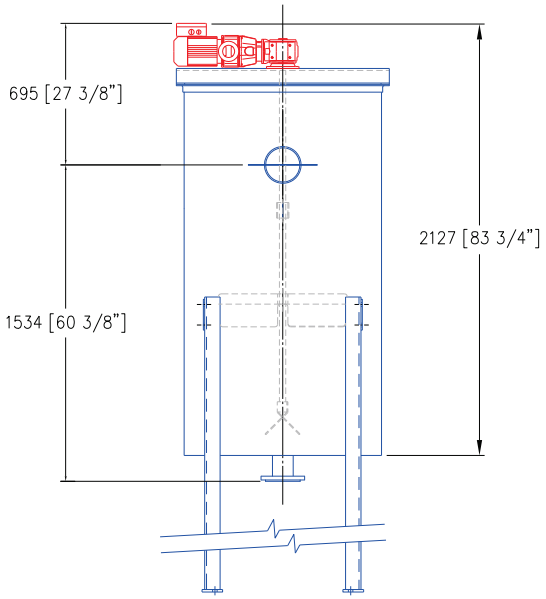


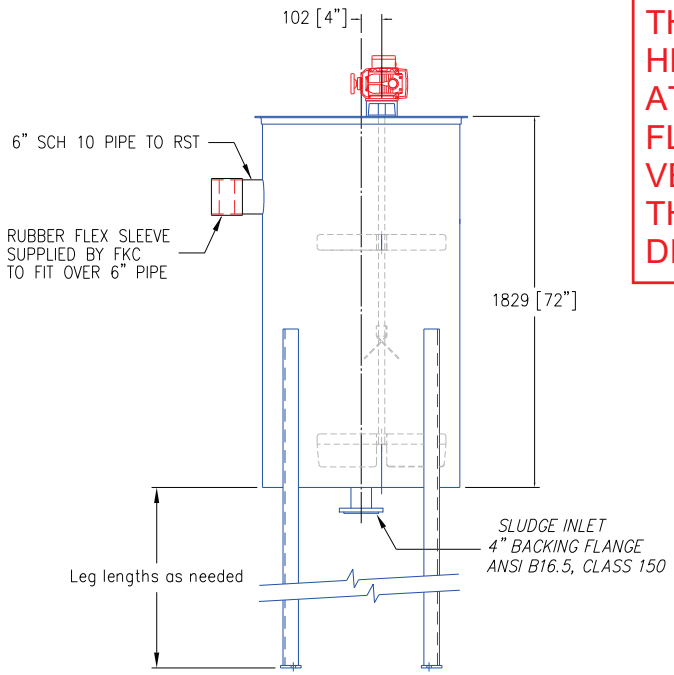


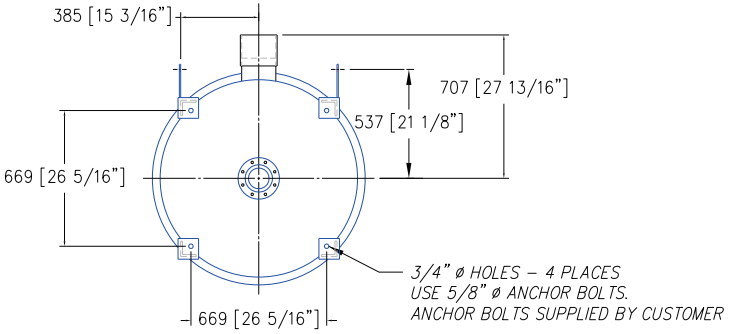


BOTTOM VIEW

CHARACTERISTICS:

TANK MATERIAL: SS304
TANK VOLUME: 285 GAL
DRY WEIGHT: 800 lbs
(add 30 # per foot of legs)
FULL WEIGHT: 3,200 lbs
(add 30 # per foot of legs)
AGITATOR: SEW EURODRIVE VARIMOT
MODEL # SAF47-D16-DT80N4-KS 32.48:1
MOTOR SUPPLIED BY FKC
MOTOR: 1 HP, 1800 RPM, DT80 FRAME
230-460 VAC, 3 PHASE
SHAFT SPEED: 13 ~ 64 RPM

NOTE:
FKC RECOMMENDS THAT THE POLYMER INJECTION POINT BE WITHIN 5'-0" OF THE FLOCCULATION TANK INLET

| Mark | Description | Material | pcs. | Weight kg. | Remarks |
|---|---|---|---|---|---|
| JOB No. | Messrs. REFERENCE | | | Quantity 1 | Scale 1/15 |
| Drawing No. | Title 285 GALLON FLOCCULATION TANK ASSEMBLY | | | Date / Drawn by | Ref. JOB No. |

| No. | Alteration | Date | Sign. |
|---|---|---|---|
| | | | |

FKC CO., LTD.
2708 W. 18TH ST.
PORT ANGELES, WA 98363
(360) 452-9472 FAX (360) 452-6880

FKC STD DWG #PA-A-250

REVISION 2

SHEET 1 OF 1