SAUSALITO - MARIN CITY SANITARY DISTRICT

TREATMENT AND WET WEATHER FLOW UPGRADE

PROJECT NO. 0055-006

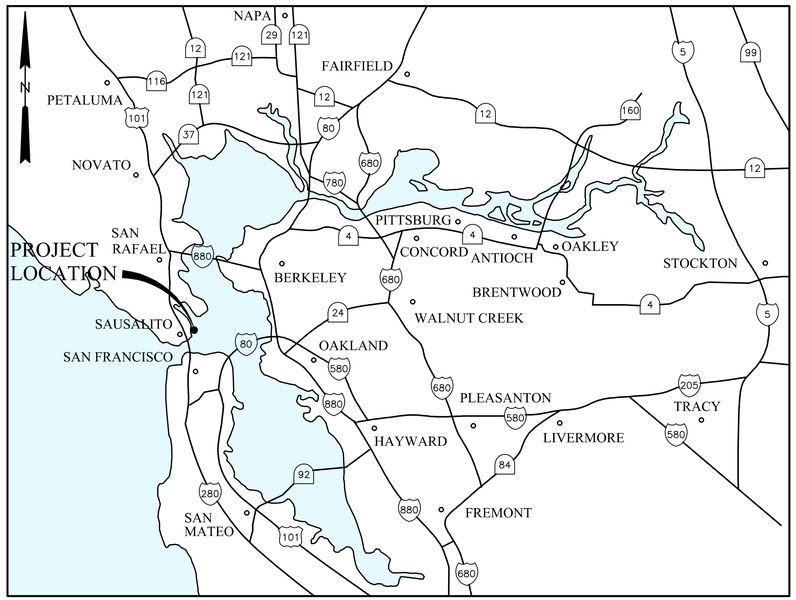

VICINITY MAP
NTS

CONTRACT DRAWINGS

VOLUME 3 (1 of 2)

JULY 2022

RECORD DRAWINGS

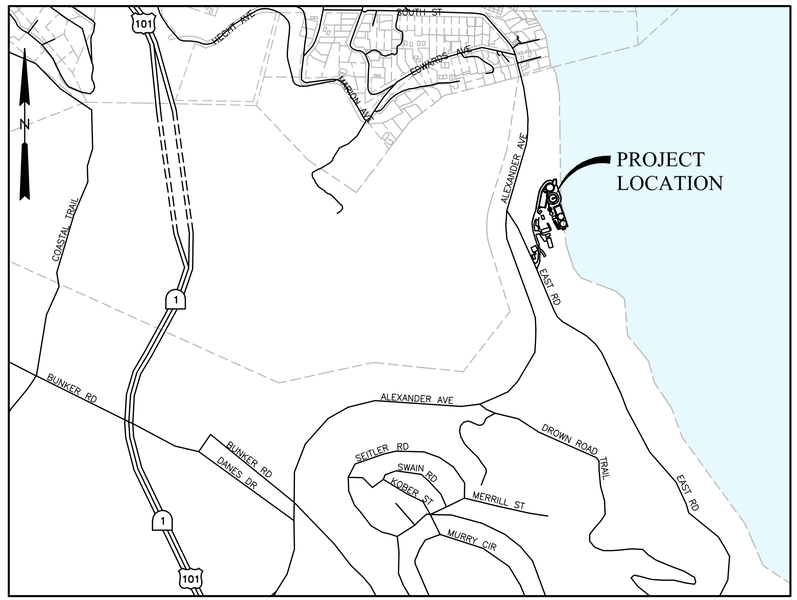

LOCATION MAP
SCALE: 1"=2000'

Woodard & Curran

TJC and ASSOCIATES, INC.

DTN ENGINEERS, INC.

RECORD DRAWING
THIS RECORD DRAWING HAS BEEN PREPARED FROM THE ORIGINAL CONTRACT DOCUMENTS SIGNED AND SEALED BY THE RESPONSIBLE ENGINEER OF RECORD. ADDITIONAL INFORMATION HAS BEEN PROVIDED BY OTHERS TO REPRESENT AS-CONSTRUCTED CONDITION AND IS SHOWN ON THESE RECORD DRAWINGS. THE RESPONSIBLE ENGINEER OF RECORD CANNOT VERIFY THE ACCURACY OF THE AS-CONSTRUCTED CONDITION INFORMATION REPRESENTED ON THE RECORD DRAWINGS.

FILENAME: 0055-006-Cover 8-01-22 11:59am cto || XREFS: ||<<--

Last Saved By: cto 7-11-22 03:09pm

INDEX OF DRAWINGS

Sheet No.	Dwg. No.	Drawing Title
	GENERAL	
1		COVER, VICINITY MAP AND LOCATION MAP
2	G-1	INDEX OF DRAWINGS
3	G-2	ABBREVIATIONS AND SYMBOLS
4	G-3	OVERALL PROCESS FLOW SCHEMATIC
5	G-4	DESIGN CRITERIA
6	G-5	HYDRAULIC PROFILE
7	G-6	PIPE SCHEDULE AND LEGENDS
8	G-7	EXISTING SITE PLAN
9	G-8	STAGING AREA LOCATIONS
	DEMOLITION	
10	D-1	DEMOLITION LEGEND AND NOTES
11	D-2	OVERALL SITE DEMOLITION PLAN
12	D-3	DEMOLITION ENLARGED PLAN
13	D-4	ENERGY DISSIPATION STRUCTURE DEMOLITION DETAILS
14	D-5	EXISTING PRIMARY CLARIFIER DEMOLITION PLAN – 1
15	D-6	EXISTING PRIMARY CLARIFIER DEMOLITION PLAN – 2
16	D-7	DEWATERING BUILDING DEMOLITION PLAN
17	D-8	DEWATERING BUILDING DEMOLITION SECTIONS
18	D-9	DIESEL TANK AND GAS PURIFIER DEMOLITION
19	D-10	MISC DEMOLITION DETAILS
20	D300-1	FFR PUMP DEMOLITION PLAN
21	D300-2	FFR MEDIA DEMOLITION PLAN
22	D300-3	FFR MEDIA DEMOLITION SECTIONS
23	D300-4	FFR PIPING DEMOLITION SECTIONS
24	D400-1	SAND FILTERS DEMOLITION PLAN & SECTIONS – 1
25	D400-2	SAND FILTERS DEMOLITION PLAN & SECTIONS – 2
26	D400-3	SAND FILTERS DEMOLITION DETAILS
27	D600-1	UTILITY WATER PUMP STATION DEMOLITION PLAN
28	D600-2	SAMPLE PUMP NO. 5 DEMOLITION PLAN AND DETAILS
	CIVIL	
29	C-1	CIVIL LEGEND & NOTES
30	C-2	CIVIL STANDARD DETAILS – 1
31	C-3	CIVIL STANDARD DETAILS – 2
32	C-4	CIVIL STANDARD DETAILS – 3
33	C-5	CIVIL STANDARD DETAILS – 4
34	C-6	CIVIL STANDARD DETAILS – 5
35	C-7	CIVIL STANDARD DETAILS – 6
36	C-8	CIVIL STANDARD DETAILS – 7
37	C-9	CIVIL MISCELLANEOUS DETAILS
38	C-20	TEMPORARY INFLUENT SEWER PLAN
39	C-21	TEMPORARY UTILITIES PLAN
40	C100-1	CIVIL SITE GRADING AND PAVING OVERALL PLAN
41	C100-2	CIVIL SITE GRADING AND PAVING PLAN – 1
42	C100-3	CIVIL SITE GRADING AND PAVING PLAN – 2
43	C100-4	TEMPORARY STAIRS
44	C110-1	GEOTECHNICAL SOIL NAIL UPPER WALL PROFILES
45	C110-2	GEOTECHNICAL SOIL NAIL LOWER WALL PROFILES
46	C110-3	SOIL NAIL ADMIN WALL PROFILE
47	C110-4	GEOTECHNICAL SOIL NAIL WALL DETAILS
48	C200-1	CIVIL YARD PIPING PLAN
49	C200-2	PIPE PROFILES – 1
50	C200-3	PIPE PROFILES – 2
51	C200-4	INFLUENT SEWER TEMPORARY BYPASS PLAN AND SECTIONS
	CATHODIC PROTECTION	
52	CP-1	CORROSION CONTROL DETAILS
53	CP-2	CORROSION CONTROL DETAILS
54	CP-3	CONCRETE REPAIR AND LINING DETAILS
55	CP-4	CONCRETE REPAIR AND LINING DETAILS
56	CP-5	CONCRETE REPAIR AND LINING DETAILS
	ARCHITECTURAL	
57	A100-1	HEADWORKS/GRIT AND EQ BASIN ARCHITECTURAL FLOOR PLAN
58	A100-2	HEADWORKS/GRIT AND EQ BASIN ARCHITECTURAL FLOOR PLAN
59	A100-3	HEADWORKS/GRIT AND EQ BASIN ARCHITECTURAL ELEVATIONS
60	A100-4	HEADWORKS/GRIT AND EQ BASIN ARCHITECTURAL ELEVATIONS
61	A100-5	HEADWORKS/GRIT AND EQ BASIN SECTIONS AND DETAILS
62	A100-6	HEADWORKS/GRIT AND EQ BASIN SCHEDULES AND DETAILS
63	A200-1	PRIMARY CLARIFIER ARCHITECTURAL ELEVATIONS
	LANDSCAPING	
64	L1	LANDSCAPE CONSTRUCTION AND PLANTING PLAN
65	L1-1	PLANTING PLAN
66	L1-2	IRRIGATION PLAN
67	L1-3	IRRIGATION PLAN
68	L10-1	TREE REMOVAL PLAN
69	L10-2	TREE REMOVAL PLAN
70	L10-3	TREE PRESERVATION PLAN
71	L10-4	TREE PRESERVATION PLAN
72	L20-1	WALL ELEVATION
73	L20-2	WALL ELEVATION
74	L20-3	WALL ELEVATION
75	L20-4	CONSTRUCTION DETAILS
76	L20-5	CONSTRUCTION DETAILS
77	L20-6	PLANTING DETAILS
78	L30-1	IRRIGATION DETAILS

Sheet No.	Dwg. No.	Drawing Title
	STRUCTURAL	
79	S-1	GENERAL NOTES
80	S-2	GENERAL NOTES
81	S-3	ABBREVIATIONS & STANDARD DETAILS
82	S-4	STANDARD DETAILS
83	S-5	STANDARD DETAILS
84	S-6	STANDARD DETAILS
85	S-7	STANDARD DETAILS
86	S-8	STANDARD DETAILS
87	S-9	STANDARD DETAILS
88	S-10	STANDARD DETAILS
89	S-11	STANDARD DETAILS
90	S-12	STANDARD DETAILS
91	S-13	STANDARD DETAILS
92	S-14	STANDARD DETAILS
93	S-15	STANDARD DETAILS
94	S-16	MISCELLANEOUS STAIRS
95	S-17	STAIR SECTIONS
96	S030-1	VIEWING AREA
97	S100-1	EQ BASIN – FOUNDATION PLAN EL 4.17
98	S100-2	HEADWORKS/EQ BASIN FOUNDATION PLAN EL 29.50
99	S100-3	HEADWORKS/EQ BASIN INTERMEDIATE PLAN EL 42.50
100	S100-4	HEADWORKS/EQ BASIN TOP PLAN EL 44.50
101	S100-5	HEADWORKS/EQ BASIN SECTION A
102	S100-6	HEADWORKS/EQ BASIN SECTION B
103	S100-7	HEADWORKS/EQ BASIN SECTIONS C & D
104	S100-8	HEADWORKS/EQ BASIN SECTIONS E & F
105	S100-9	HEADWORKS/EQ BASIN SECTIONS G & H
106	S100-10	HEADWORKS/EQ BASIN SECTIONS J & K
107	S100-11	HEADWORKS/EQ BASIN SECTIONS & DETAILS
108	S200-1	PRIMARY CLARIFIER NO. 2 FOUNDATION AND TOP PLANS
109	S200-2	PRIMARY CLARIFIER NO. 2 SECTIONS AND DETAIL
110	S400-1	EFFLUENT FILTERS PLAN
111	S400-2	EFFLUENT FILTERS SECTIONS
112	S400-3	MISCELLANEOUS STAIRS
	MECHANICAL	
113	M-1	MECHANICAL LEGEND AND SCHEDULE
114	M-2	MECHANICAL STANDARD DETAILS – 2
115	M-3	MECHANICAL STANDARD DETAILS – 3
116	M-4	MECHANICAL STANDARD DETAILS – 4
117	M-5	MECHANICAL STANDARD DETAILS – 5
118	M-6	MECHANICAL STANDARD DETAILS – 6
119	M-7	MECHANICAL STANDARD DETAILS – 7
120	M-8	MECHANICAL STANDARD DETAILS – 8
121	M-9	MECHANICAL STANDARD DETAILS – 9
122	M-10	MECHANICAL STANDARD DETAILS – 10
123	M-20	ODOR CONTROL SCHEMATIC
124	M100-1	OVERALL SITE PLAN
125	M100-2	HEADWORKS AND EQ BASIN FOUNDATION PLAN
126	M100-3	HEADWORKS AND EQ BASIN LOWER PLAN EL 25.0
127	M100-4	HEADWORKS AND EQ BASIN PLAN EL 43.0
128	M100-5	HEADWORKS AND EQ BASIN TOP PLAN
129	M100-6	HEADWORKS AND EQ BASIN ENLARGED PLAN AT EL 43.00
130	M100-7	HEADWORKS/PRIMARY – SECTION 1
131	M100-8	HEADWORKS – SECTION 1
132	M100-9	HEADWORKS – SECTION 2
133	M100-10	HEADWORKS – SECTION 3
134	M100-11	HEADWORKS – SECTION 4
135	M100-12	HEADWORKS – SECTION 5
136	M100-13	HEADWORKS – SECTION 6
137	M100-14	HEADWORKS – SECTION 7
138	M100-15	HEADWORKS – SECTION 8
139	M100-16	HEADWORKS – SECTION 9
140	M100-17	HEADWORKS – SECTION 10
141	M100-18	HEADWORKS DETAILS
142	M110-1	ILLUSTRATIVE ISOMETRIC VIEWS – 1
143	M110-2	ILLUSTRATIVE ISOMETRIC VIEWS – 2
144	M110-3	ILLUSTRATIVE ISOMETRIC VIEWS – 3
145	M200-1	PRIMARY CLARIFIER NO. 2 – TOP PLAN
146	M200-2	PRIMARY CLARIFIER NO. 2 – BOTTOM PLAN
147	M200-3	PRIMARY CLARIFIER SECTION
148	M200-4	PRIMARY CLARIFIER DETAILS – 1
149	M200-5	PRIMARY CLARIFIER DETAILS – 2
150	M200-6	SCUM PIT AND EFFLUENT BOX PARTIAL PLAN AND SECTIONS
151	M210-1	PRIMARY SLUDGE/SCUM PUMPS – PARTIAL PLAN AND SECTIONS
152	M210-2	PRIMARY SLUDGE/SCUM PUMPS – PARTIAL PLAN AND SECTIONS
153	M300-1	FFR PUMP PLAN AND SECTION
154	M300-2	DIVERSION BOX PLAN AND SECTION
155	M300-3	FIXED FILM REACTOR SECTION
156	M400-1	EFFLUENT FILTERS FOUNDATION PLAN
157	M400-2	EFFLUENT FILTERS INTERMEDIATE PLAN
158	M400-3	EFFLUENT FILTERS TOP PLAN
159	M400-4	EFFLUENT FILTERS SECTIONS
160	M400-5	EFFLUENT FILTERS SECTIONS
161	M400-6	EFFLUENT FILTERS SECTIONS
162	M500-1	RECYCLE BOX PLAN AND SECTIONS
163	M600-1	UTILITY WATER PUMP STATION PLAN AND SECTION
164	M600-2	UTILITY WATER PUMP STATION SECTION

Sheet No.	Dwg. No.	Drawing Title
	ELECTRICAL	
165	E-1	LEGEND AND GENERAL NOTES
166	E-2	MAIN SINGLE-LINE DIAGRAM MCC HW ELEVATION
167	E-3	MCC-HW SINGLE-LINE DIAGRAM
168	E-4	FFR SUPPLY PUMPS MODIFICATIONS
169	E-5	FILTER FEED PUMP CONTROL CONTROL SCHEMATIC & PANEL
170	E-6	CONTROL SCHEMATIC DIAGRAMS SHEET 1 OF 4
171	E-7	CONTROL SCHEMATIC DIAGRAMS SHEET 2 OF 4
172	E-8	CONTROL SCHEMATIC DIAGRAMS SHEET 3 OF 4
173	E-9	CONTROL SCHEMATIC DIAGRAMS SHEET 4 OF 4 AND PANEL BOARD SCHEDULE
174	E-10	CONTROL ONE-LINE DIAGRAMS SHEET 1 OF 2
175	E-11	CONTROL ONE-LINE DIAGRAMS SHEET 2 OF 2
176	E-12	SCADA PLC WIRING DIAGRAMS PLC-HW SHEET 1 OF 4
177	E-13	SCADA PLC WIRING DIAGRAMS PLC-HW SHEET 2 OF 4
178	E-14	SCADA PLC WIRING DIAGRAMS PLC-HW SHEET 3 OF 4
179	E-15	SCADA PLC WIRING DIAGRAMS PLC-HW SHEET 4 OF 4
180	E-15A	SCADA PLC WIRING DIAGRAMS PLC-GEN SHEET 1 OF 2
181	E-15B	SCADA PLC WIRING DIAGRAMS PLC-GEN SHEET 2 OF 2
182	E-16	SCADA PLC WIRING DIAGRAM INTERNAL POWER DISTRIBUTION
183	E-17	CABLE AND CONDUIT SCHEDULE SHEET 1 OF 3
184	E-18	CABLE AND CONDUIT SCHEDULE SHEET 2 OF 3
185	E-19	CABLE AND CONDUIT SCHEDULE SHEET 3 OF 3
186	E-20	LIGHTING FIXTURE SCHEDULE AND LIGHTING CONTROL AND EYEWASH CONTROL PANEL
187	E-21	FIRE ALARM – ELECTRICAL ROOM
188	E-22	CONSTRUCTION DETAILS SHEET 1 OF 3
189	E-23	CONSTRUCTION DETAILS SHEET 2 OF 3
190	E-24	CONSTRUCTION DETAILS SHEET 3 OF 3
191	E-25	PARTIAL SITE PLAN – THICKENER, SEC. DIGESTER & GEN. BLDG.
192	E-26	ELECT. SEQUENCE OF WORK AND TEMP. POWER DURING CONSTRUCTION
193	E-27	TYPICAL CONSTRUCTION DETAILS SHEET 1 OF 3
194	E-28	TYPICAL CONSTRUCTION DETAILS SHEET 2 OF 3
195	E-29	TYPICAL CONSTRUCTION DETAILS SHEET 3 OF 3
196	E-30	UTILITY WATER PUMP CONTROL DIAGRAM AND CONTROL PANEL
197	E-31	EXISTING MCC-P1 MODIFICATIONS AND RECYCLE PUMPS
198	E-32	UTILITY WATER PUMP DETAIL, RECYCLE PUMP DETAIL AND PLC-6 MODIFICATIONS
199	E-33	EXISTING MAIN PLANT PLC MODIFICATIONS
200	E-34	EXISTING PLC-6 MODIFICATIONS
201	E100-1	OVERALL SITE PLAN
202	E100-2	HEADWORKS ELECTRICAL PARTIAL ENLARGED SITE PLAN
203	E100-3	HEADWORKS/GRIT AND EQ BASIN TOP PLAN – POWER AND SIGNAL
204	E100-4	HEADWORKS/GRIT & EQ BASIN CROSS SECTION DETAIL
205	E100-5	HEADWORKS/GRIT & EQ BASIN BOTTOM PLAN – POWER AND SIGNAL
206	E100-6	EQUALIZATION CROSS SECTION LIGHTING ELEVATION DETAIL
207	E100-7	ELECTRICAL ENLARGED PLAN, MCC ROOM – POWER, LIGHTING AND SIGNAL
208	E200-1	PRIMARY SLUDGE/SCUM PUMPS PARTIAL PLAN AND SECTION
209	E300-1	FIXED FILM REACTOR MODIFICATIONS PLAN – POWER AND SIGNAL
210	E400-1	EFFLUENT FILTERS PLAN – POWER AND SIGNAL
	INSTRUMENTATION AND CONTROLS	
211	I-1	INSTRUMENTATION LEGEND AND GENERAL NOTES
212	I-2	INSTRUMENTATION SYMBOLS AND NOTES
213	I-3	SCADA SYSTEM BLOCK DIAGRAM
214	I-4	INSTRUMENTATION TYPICAL DETAILS SHEET 1 OF 2
215	I-5	INSTRUMENTATION TYPICAL DETAILS SHEET 2 OF 2
216	I100-1	P&ID HEADWORKS OVERVIEW
217	I100-2	P&ID SCREENING HANDLING AND TURNTABLE
218	I100-3	P&ID GRIT HANDLING INSTRUMENTATION
219	I100-4	P&ID EQUALIZATION INSTRUMENTATION
220	I100-5	P&ID FERRIC CHLORIDE SYSTEM AND DIESEL FUEL TANK
221	I200-1	P&ID PRIMARY CLARIFIER #2 AND SLUDGE/SCUM PUMPING
222	I300-1	P&ID FIXED FILM REACTOR SUPPLY PUMPING
223	I400-1	P&ID TERTIARY FILTER PUMPING
224	I400-2	P&ID TERTIARY FILTER PACKAGES
225	I500-1	P&ID RECYCLE PUMP STATION
226	I600-1	P&ID UTILITY WATER PUMP STATION

SELECT REFERENCE DRAWINGS (AVAILABLE IN ELECTRONIC PDF FORMAT ONLY)

1952 SMCSD SEWAGE PUMPING AND TREATMENT WORKS
1972 SMCSD WASTE TREATMENT AND DISPOSAL FACILITIES
1988 SMCSD WASTEWATER PLANT IMPROVEMENTS C-06-2464 RECORD DRAWINGS
1990 SMCSD WASTEWATER PLANT IMPROVEMENTS EFFLUENT FILTERS
1997 SMCSD BEACH FORCEMAIN REPLACEMENT
2008 SMCSD SLUDGE DEWATERING PROEJCT

RECORD DRAWING
THIS RECORD DRAWING HAS BEEN PREPARED FROM THE ORIGINAL CONTRACT DOCUMENTS SIGNED AND SEALED BY THE RESPONSIBLE ENGINEER OF RECORD. ADDITIONAL INFORMATION HAS BEEN PROVIDED BY OTHERS TO REPRESENT AS-CONSTRUCTED CONDITION AND IS SHOWN ON THESE RECORD DRAWINGS. THE RESPONSIBLE ENGINEER OF RECORD CANNOT VERIFY THE ACCURACY OF THE AS-CONSTRUCTED CONDITION INFORMATION REPRESENTED ON THE RECORD DRAWINGS.

0" — 1" — VERIFY SCALES — BAR IS ONE INCH LONG ON FULL SIZE DRAWING. IF NOT ONE INCH LONG ON THIS DRAWING, ADJUST SCALES ACCORDINGLY

Woodard & Curran

REV	DATE	BY	APVD	DESCRIPTION
1	07/22	CT	TV	RECORD DRAWING

DESIGNED M. TAKEMOTO
DRAWN S. JUNG
CHECKED M. NAKAMOTO

SUBMITTED: MARK TAKEMOTO, RMC PROJECT ENGINEER CE-64369
APPROVED: STEVE CLARY, RMC ENGINEER CE-30318

SAUSALITO · MARIN CITY SANITARY DISTRICT

TREATMENT AND WET WEATHER FLOW UPGRADE

INDEX OF DRAWINGS

DWG NO	G-1
SHEET NO	2 OF 226
PROJ NO	055-006
DATE	JULY 2022

FILENAME: 0055-006-G-1 8-01-22 11:59am cto || XREFS: | X-SMCSD-TBLK |<<--
Last Saved By: cto 8-01-22 09:38am

ABBREVIATIONS

@	AT
AB	ANCHOR BOLT, AGGREGATE BASE
ABC	AGGREGATE BASE COURSE (CALTRANS CLASS 2 AGGREGATE BASE)
ABS	ACRYLONITRILE-BUTADIENE- STYRENE
AC	ASBESTOS CEMENT, ASPHALTIC CONCRETE
AC/HR	AIR CHANGES PER HOUR
ACI	AMERICAN CONCRETE INSTITUTE
ADH AB	ADHESIVE ANCHOR BOLT
ADJ	ADJACENT, ADJUSTABLE
AISC	AMERICAN INSTITUTE OF STEEL CONSTRUCTION
AL	ALUMINUM
ALT	ALTERNATE
ANSI	AMERICAN NATIONAL STANDARDS INSTITUTE
APPROX	APPROXIMATE
ARCH.	ARCHITECTURAL
ARV	AIR RELEASE VALVE
AUX	AUXILIARY
AWG	AMERICAN WIRE GAGE
AWT	ADVANCED WASTE TREATMENT
BC	BOLT CIRCLE, BEGIN CURVE
BD	BOARD
BF	BLIND FLANGE, BOTTOM FLAT
BFV	BUTTERFLY VALVE
BGS	BELOW GROUND SURFACE
BLDG	BUILDING
BM	BENCH MARK, BEAM
BO	BLOWOFF
BOT	BOTTOM
BRG	BEARING
BS	BUTT STRAP
BV	BALL VALVE
BVC	BEGINNING OF VERTICAL CURVE
C	CHANNEL (BEAM)
CAV	COMBINATION AIR AND VACUUM VALVE
CB	CATCH BASIN
CDF	CONTROLLED DENSITY FILL
CFM	CUBIC FEET PER MINUTE
CFS	CUBIC FEET PER SECOND
CHEM	CHEMICAL
CIP	CAST IRON PIPE
CIRC	CIRCUMFERENTIAL
CJ	CONSTRUCTION JOINT
CLR	CLEAR
CLS	CHLORINE SOLUTION HYPOCHLORITE
CLSM	CONTROLLED LOW STRENGTH MATERIAL
℄	CENTERLINE
CMP	CORRUGATED METAL PIPE
CMU	CONCRETE MASONRY UNIT
CO	CLEANOUT
COL	COLUMN
COMP	COMPRESSOR(S)
CONC	CONCRETE, CONCENTRIC
COND	CONDUIT
CONN	CONNECTION
CONT	CONTINUOUS
COORD	COORDINATE
CPLG	COUPLING
CPVC	CHLORINATED POLYVINYL CHLORIDE
CT	CERAMIC TILE
CTD	CENTERED
CTJ	CONTROL JOINT
CTR	CENTER
CTS	CORROSION TEST STATION
C TO C	CENTER TO CENTER
CU	CUBIC
CU FT	CUBIC FOOT
CU IN.	CUBIC INCH
CU YD	CUBIC YARD
CV	CHECK VALVE
°C	DEGREE CELSIUS
d	PENNY (NAIL SIZE)
D	DRAIN
DBL	DOUBLE
DET	DETAIL
DFT	DRY FILM THICKNESS
DI	DROP INLET, DUCTILE IRON
DIA	DIAMETER
DIAG	DIAGONAL
DIP	DUCTILE IRON PIPE
DIR	DIRECTION
DN	DOWN
DWG	DRAWING
E	EAST
EA	EACH
EC	END CURVE
ECB	EROSION CONTROL BLANKET
ECC	ECCENTRIC
EF	EACH FACE, EXHAUST FAN
EL, ELEV	ELEVATION
ELEC	ELECTRIC, ELECTRICAL
ELL	ELBOW
ENGR	ENGINEER
EO	EMERGENCY OVERFLOW
EP	EDGE OF PAVEMENT
EQ	EQUAL
EQPT	EQUIPMENT
EQ SP	EQUALLY SPACED, EQUAL SPACES
ESMT	EASEMENT
EVC	END OF VERTICAL CURVE
EW	EACH WAY
EWEF	EACH WAY, EACH FACE
EXC	EXCAVATE
EXH	EXHAUST
EXP	EXPOSED
EXP JT	EXPANSION JOINT
EXST	EXISTING
FA	FOUL AIR
FAB	FABRICATION
FC	FLEXIBLE COUPLING
FCA	FLANGED COUPLING ADAPTER
FCO	FLOOR CLEAN OUT
FD	FLOOR DRAIN
FDS	FINAL DIGESTED SLUDGE
FDN	FOUNDATION
FE	FLANGED END, FINAL EFFLUENT
FEXT	FIRE EXTINGUISHER
FF	FINISH FLOOR
FG	FINISH GRADE
FHY	FIRE HYDRANT
FI	FILTER INFLUENT
FIG.	FIGURE
FL	FLOOR
℄	FLOW LINE
FLG	FLANGE
FLH	FLAT HEAD
FLTR	FILTER
FM	FORCE MAIN
FO	FIBER OPTIC
FOC	FACE OF CONCRETE, FIBER OPTIC CABLE
FOCC	FIBER OPTIC CABLE CONDUIT
FOR	FUEL OIL RETURN
FOS	FUEL OIL SUPPLY
FRP	FIBERGLASS REINFORCED PLASTIC
FT	FOOT OR FEET
FTG	FOOTING
FUT	FUTURE
FWD	FORWARD
°F	DEGREE FAHRENHEIT
GA	GAGE
GAL	GALLON
GALV	GALVANIZED
GC	GROOVED COUPLING
GCO	GRADE CLEAN OUT
GE	GROOVED END
GL	GLASS
GPD	GALLONS PER DAY
GPH	GALLONS PER HOUR
GPM	GALLONS PER MINUTE
GSP	GALVANIZED STEEL PIPE
GV	GATE VALVE
GVL	GRAVEL
HD	HUB DRAIN
HDG	HOT DIP GALVANIZED
HDPE	HIGH DENSITY POLYETHYLENE, HDPE PIPE
HDR	HEADER
HDW	HARDWARE
HGT	HEIGHT
HM	HOLLOW METAL
HORIZ	HORIZONTAL
HP	HORSEPOWER
HR	HOSE RACK, HANDRAIL, HOUR
HV	HOSE VALVE
HWR	HOT WATER RETURN
HWS	HOT WATER SUPPLY
H2E	HOOK TWO ENDS
ID	INSIDE DIAMETER
IF.	INSIDE FACE
IJTS	INSULATING JOINT TEST STATION
IN.	INCH
INFL	INFLUENT
INSTM	INSTRUMENTATION
INSUL	INSULATE
INVT	INVERT
IRR, IRRIG	IRRIGATION
IE	INVERT ELEVATION
JT	JOINT
KIP	THOUSAND POUNDS
KW	KILOWATT
L	ANGLE, LENGTH
LAB	LABORATORY
LAV	LAVATORY
LB	POUNDS
LB/CU FT	POUNDS PER CUBIC FOOT
LF	LINEAR FEET
LONG.	LONGITUDINAL
LP	LOW PRESSURE
LR	LONG RADIUS
LT	LEFT
MAG	MAGNETIC
MATL	MATERIAL
MAX	MAXIMUM
MCC	MOTOR CONTROL CENTER
MECH	MECHANICAL
MFR	MANUFACTURER
MGD	MILLION GALLONS PER DAY
MH	MANHOLE
MIN	MINIMUM
MISC	MISCELLANEOUS
MJ	MECHANICAL JOINT
ML	MIXED LIQUOR
MLCSP	MORTAR LINED AND COATED STEEL PIPE
MSNRY	MASONRY
MO	MASONRY OPENING
MT	MITER
MTR	METER
MTS	MILL TYPE STEEL PIPE
MWS	MAXIMUM WATER SURFACE
N	NORTH
NIC	NOT IN CONTRACT
NO.	NUMBER
NPT	NATIONAL PIPE THREAD
NTS	NOT TO SCALE
OC	ON CENTER
OD	OUTSIDE DIAMETER
OF.	OUTSIDE FACE, OVERFLOW
OSD	OPEN SITE DRAIN
OPNG	OPENING
OZ	OUNCE
PC	POINT OF CURVE
PCC	PORTLAND CEMENT CONCRETE, POINT OF COMPOUND CURVATURE
PCO	PRESSURE CLEANOUT
PD	PUMPED DRAIN
PE	PLAIN END
PH	POTHOLE
PI	POINT OF INTERSECTION
PL	PLASTIC, PROPERTY LINE, PLATE
℔	PLATE (STEEL)
PLYWD	PLYWOOD
PRC	POINT OF REVERSE CURVE
PREFAB	PREFABRICATED
PRESS.	PRESSURE
PRI	PRIMARY
PROP	PROPERTY
PSF	POUNDS PER SQUARE FOOT
PS	PUMP STATION
PSI	POUNDS PER SQUARE INCH
PSIG	POUNDS PER SQUARE INCH, GAUGE
PT	POINT, POINT OF TANGENCY
PV	PLUG VALVE
PVC	POLYVINYL CHLORIDE PLASTIC, PVC PIPE
PVMT	PAVEMENT
R	RADIUS
RAS	RETURN ACTIVATED SLUDGE
RCP	REINFORCED CONCRETE PIPE
RD	ROOF DRAIN, ROAD
RDCR	REDUCER
RDW	REDWOOD
RECIRC	RECIRCULATION
REF	REFER OR REFERENCE
REINF	REINFORCED, REINFORCING, REINFORCE
REQD	REQUIRED
RM	ROOM
RO	ROUGH OPENING
RPVC	REINFORCED POLYVINYL CHLORIDE
RSFM	RAW SEWAGE FORCE MAIN
RSU	RETURN SUPERNATANT
RT	RIGHT
RTN	RETURN
RV	ROOF VENT
RW	RECYCLED WATER
R/W	RIGHT-OF-WAY
SCFM	STANDARD CUBIC FEET PER MINUTE
SCH	SCHEDULE
SD	STORM DRAIN, SOAP DISPENSER
SE	SECONDARY EFFLUENT
SEC	SECONDARY
SECT	SECTION
SHT	SHEET
SIM	SIMILAR
SL, SLP	SLOPE
SMP	SAMPLE
SOLN	SOLUTION
SP	SPACE OR SPACES
SPEC	SPECIFICATIONS
SPLY	SUPPLY
SQ	SQUARE
SQ FT	SQUARE FOOT
SQ IN	SQUARE INCH
SS	SANITARY SEWER
SST	STAINLESS STEEL
STA	STATION
STD	STANDARD
STL	STEEL, STEEL PIPE
STR	STRAIGHT
STRL	STRUCTURAL
STRUCT	STRUCTURE
SUSP	SUSPEND
SWD	STORM WATER DRAIN
SYMM	SYMMETRICAL
T	TANGENT LENGTH
TAN.	TANGENT
TBG	TUBING
TBM	TEMPORARY BENCH MARK
T&B	TOP AND BOTTOM
TC	TOP OF CURB
TDH	TOTAL DYNAMIC HEAD
TECH	TECHNICAL
TEL	TELEPHONE
TEMP	TEMPERATURE
TF	TOP FACE, TOP FLAT
T&G	TONGUE AND GROOVE
THD	THREAD
THK	THICK
THRU	THROUGH
TOS	TOP OF SLOPE, TOP OF STEEL
TP	TURNING POINT
TRANSF	TRANSFORMER
TRANSV	TRANSVERSE
TW	TOP OF WALL
TYP	TYPICAL
UBC	UNIFORM BUILDING CODE
UD	UNDERDRAIN
UNO	UNLESS NOTED OTHERWISE
USA	UNDERGROUND SERVICES ALERT
UW	UTILITY WATER
V	VENT, VOLT, VALVE
VAC	VACUUM
VAR	VARIOUS
VC	VERTICAL CURVE
VERT	VERTICAL
VPI	VERTICAL POINT OF INTERSECTION
VTR	VENT THRU ROOF
W	WIDE FLANGE (BEAM), WEST, WATER
W/	WITH
WAS	WASTE ACTIVATED SLUDGE
WC	WATER CLOSET
WH	WATER HEATER
WM	WATER METER
WP	WORK POINT
WS	WATER SURFACE, WATER STOP
W SH ST	WEATHERING SHEET STEEL
WSP	WELDED STEEL PIPE
WT	WEIGHT
WTR	WATER
WW	WASHWATER
WWF	WELDED WIRE FABRIC
YD	YARD

NOTES:

1. THIS IS A STANDARD ABBREVIATION SHEET. SOME ABBREVIATIONS THAT APPEAR ON THIS SHEET ARE NOT USED ON THIS PROJECT.
2. FOR PROCESS FLUID ABBREVIATIONS SEE SHEET G-6.

SECTION AND DETAIL IDENTIFICATION

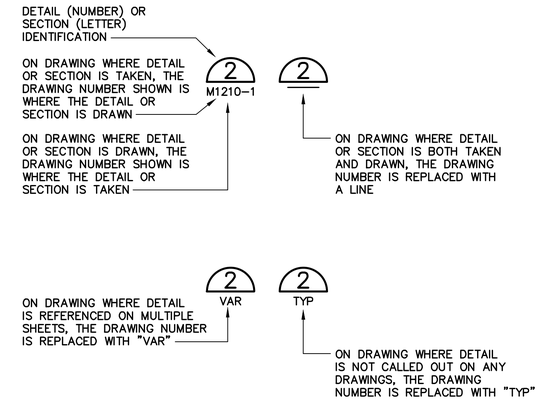

STANDARD DETAIL IDENTIFICATION

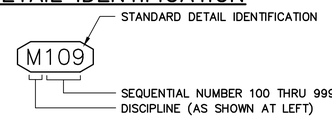

DISCIPLINES:

C	CIVIL
CP	CATHODIC PROTECTION
L	LANDSCAPING AND IRRIGATION
M	MECHANICAL
A	ARCHITECTURAL
E	ELECTRICAL
P	INSTRUMENTATION AND CONTROL
S	STRUCTURAL

NOTE:

STANDARD DETAIL IDENTIFICATIONS ARE SHOWN ON THE PLANS AND ON THE STANDARD DETAIL DRAWINGS. THERE IS NO SPECIFIC CROSS REFERENCING OF DRAWINGS. STANDARD DETAILS ARE INTENDED TO BE TYPICAL AND SHALL APPLY TO ALL SIMILAR SITUATIONS OCCURRING ON THIS PROJECT, WHETHER OR NOT THEY ARE REFERENCED TO IN EACH APPLICABLE LOCATION. CONSULT THE ENGINEER FOR REVIEW OF THE USE OF STANDARD DETAILS PRIOR TO BIDDING.

RECORD DRAWING
THIS RECORD DRAWING HAS BEEN PREPARED FROM THE ORIGINAL CONTRACT DOCUMENTS SIGNED AND SEALED BY THE RESPONSIBLE ENGINEER OF RECORD. ADDITIONAL INFORMATION HAS BEEN PROVIDED BY OTHERS TO REPRESENT AS-CONSTRUCTED CONDITION AND IS SHOWN ON THESE RECORD DRAWINGS. THE RESPONSIBLE ENGINEER OF RECORD CANNOT VERIFY THE ACCURACY OF THE AS-CONSTRUCTED CONDITION INFORMATION REPRESENTED ON THE RECORD DRAWINGS.

0" 1" VERIFY SCALES — BAR IS ONE INCH LONG ON FULL SIZE DRAWING. IF NOT ONE INCH LONG ON THIS DRAWING, ADJUST SCALES ACCORDINGLY

Woodard & Curran

REV	DATE	BY	APVD	DESCRIPTION
1	07/22	CT	TV	RECORD DRAWING

DESIGNED M. TAKEMOTO
DRAWN S. JUNG
CHECKED M. NAKAMOTO

SUBMITTED: MARK TAKEMOTO, RMC PROJECT ENGINEER CE-64369
APPROVED: STEVE CLARY, RMC ENGINEER CE-30318

SAUSALITO · MARIN CITY SANITARY DISTRICT

TREATMENT AND WET WEATHER FLOW UPGRADE

ABBREVIATIONS AND SYMBOLS

DWG NO	G-2
SHEET NO	3 OF 226
PROJ NO	055-006
DATE	JULY 2022

FILENAME: 055-006-G-2 8-01-22 11:59am cto || XREFS|| X-SMCSD-TBLK |<<--
Last Saved By: cto 8-01-22 09:50am

LEGEND (EXISTING):

- EXISTING
- (F) FLOWMETER
- SLUDGE HEATER
- PUMP
- PLUG VALVE
- GATE VALVE
- SLUICE GATE
- CL_2 CHLORINE SOLUTION
- SO_2 SULFUR DIOXIDE SOLUTION
- VS VARIABLE SPEED
- *** MIXING NOT SHOWN
- ** BYPASS VALVING NOT SHOWN
- * CHECK VALVES NOT SHOWN

LEGEND (NEW):

- NEW
- (F) FLOWMETER
- PUMP
- PLUG VALVE
- GATE VALVE
- BUTTERFLY VALVE
- BALL CHECK
- KNIFE GATE VALVE
- SLUICE GATE

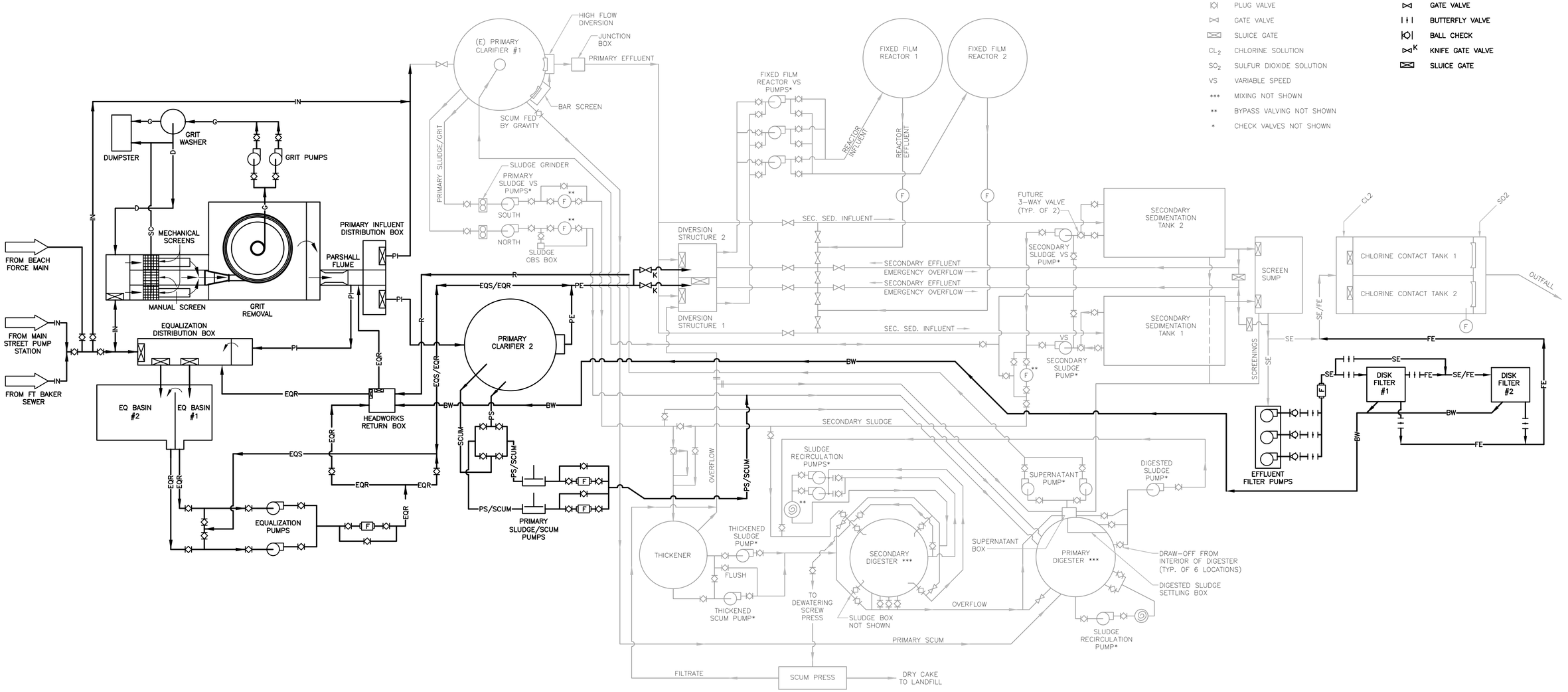

RECORD DRAWING

THIS RECORD DRAWING HAS BEEN PREPARED FROM THE ORIGINAL CONTRACT DOCUMENTS SIGNED AND SEALED BY THE RESPONSIBLE ENGINEER OF RECORD. ADDITIONAL INFORMATION HAS BEEN PROVIDED BY OTHERS TO REPRESENT AS-CONSTRUCTED CONDITION AND IS SHOWN ON THESE RECORD DRAWINGS. THE RESPONSIBLE ENGINEER OF RECORD CANNOT VERIFY THE ACCURACY OF THE AS-CONSTRUCTED CONDITION INFORMATION REPRESENTED ON THE RECORD DRAWINGS.

0" — 1" VERIFY SCALES — BAR IS ONE INCH LONG ON FULL SIZE DRAWING. IF NOT ONE INCH LONG ON THIS DRAWING, ADJUST SCALES ACCORDINGLY

Woodard & Curran

REV	DATE	BY	APVD	DESCRIPTION
1	07/22	CT	TV	RECORD DRAWING

DESIGNED M. TAKEMOTO
DRAWN C. TO
CHECKED M. NAKAMOTO

SUBMITTED: MARK TAKEMOTO, RMC PROJECT ENGINEER CE-64369
APPROVED: STEVE CLARY, RMC ENGINEER CE-30318

SAUSALITO · MARIN CITY SANITARY DISTRICT

TREATMENT AND WET WEATHER FLOW UPGRADE

OVERALL PROCESS FLOW SCHEMATIC

DWG NO	G-3
SHEET NO	4 OF 226
PROJ NO	055-006
DATE	JULY 2022

FILENAME: 055-006-G-3 8-01-22 12:00pm cto || XREFS: X-SMCSD-TBLK |<<--

Last Saved By: cto 8-01-22 09:42am

Criteria	Value	Units
Design Flow		
Average Dry Weather Flow	1.3	MGD
Peak Day Wet Weather Flow	6	MGD
5-Year Peak Wet Weather Flow (Instantaneous)	12.3	MGD
10-Year Peak Wet Weather Flow (Instantaneous)	13	MGD
Headworks		
Mechanical Screens		
Type	Sieve auger screen	-
Number	2	-
Openings	0.25	inch
Capacity (Each Screen)	3	MGD
Manual Screen		
Type	Bar	-
Number	1	-
Screen Opening Width	0.75	inch
Capacity	10	MGD
Grit Chamber		
Type	Hydraulic Vortex	-
Number	1	-
Diameter	9	ft
Capacity	13	MGD

Criteria	Value	Units
Grit Pumps		
Type	Recessed Impeller	-
Number	2	-
Capacity (Each Pump)	250	gpm
TDH	24	ft
Motor Size	10	HP
Grit Handling		
Type	Fuidized Bed	-
Number	1	-
Capacity (1 Unit)	250	gpm
Influent Metering		
Type	Parshall Flume	-
Number	1	-
Throat Width	18	inch
Equalization		
EQ Storage Tank		
Compartments	2	-
Volume (Total)	0.6	MG
EQ Activated @ Influent Flow of	9	MGD

Criteria	Value	Units
EQ Return Pumps		
Type	Self Priming	-
Number	2	-
Capacity (Each)	1390	gpm
TDH	61	feet
Motor Size	40	HP
Primary Treatment		
Primary Clarifier		
Number	2 (1 new/1 existing)	-
Type	Circular	-
Maximum Design Flow (each)	6 to 7	MGD
Diameter	55	feet
Side Water Depth	9.5	feet
Surface Area (Each Tank)	2,376	ft^2
Overflow Rate at Average Dry Weather Flow (1.3 MGD)	631	gpd/ft^2
Overflow Rate at 10-Year Peak Wet Weather Flow (13.0 MGD with 2 Units in Service)	2,736	gpd/ft^2
Primary Sludge/Scum Pumps		
Type	Double Disc	-
Number	2	-
Capacity (Each Pump)	100	gpm
TDH	20	feet
Motor Size	5	HP

Criteria	Value	Units
Secondary Treatment		
FFR Feed Pumps		
Type	Centrifugal	-
Number	3	-
Capacity (Each Pump)	3,125	gpm
TDH	62	feet
Motor Size	75	HP
Fixed Film Reactor		
Media Type	Cross Flow	-
Media Surface Area/Volume	32	ft^2/ft^3
Reactor Surface Area (Total, 2 FFRs)	2,514	ft^2
Media Depth	32	ft
Volume (Total, 2 FFRs)	81,060	ft^3
Tertiary Treatment		
Filter Feed Pumps		
Type	Submersible	-
Number	3	-
Capacity (Each Pump)	2,085	gpm
TDH	31	feet
Motor Size	20	HP

Criteria	Value	Units
Tertiary Filtration		
Type	Rotating Disk	-
Units	2	-
Disks Per Unit	8	-
Filter Area Per Disk	54	ft^2
Nominal Pore Size	10 (Disk Filter No. 1) 5 (Disk Filter No. 2)	micron
Total Submerged Filter Area	861	ft^2
Design Loading Rate	2.42	gpm/ft^2
Maximum Loading Rate	4.84	gpm/ft^2
Maximum Backwash (% of average flow)	5	%
Filter Backwash Pumps		
Type	Centrifugal	-
Number	4	-
Capacity (Each Pump)	130	gpm
TDH	45	feet
Motor Size	3	HP
Turn Table		
Diameter	25	feet
Motor Size	2	HP

RECORD DRAWING
THIS RECORD DRAWING HAS BEEN PREPARED FROM THE ORIGINAL CONTRACT DOCUMENTS SIGNED AND SEALED BY THE RESPONSIBLE ENGINEER OF RECORD. ADDITIONAL INFORMATION HAS BEEN PROVIDED BY OTHERS TO REPRESENT AS-CONSTRUCTED CONDITION AND IS SHOWN ON THESE RECORD DRAWINGS. THE RESPONSIBLE ENGINEER OF RECORD CANNOT VERIFY THE ACCURACY OF THE AS-CONSTRUCTED CONDITION INFORMATION REPRESENTED ON THE RECORD DRAWINGS.

0" 1" — VERIFY SCALES — BAR IS ONE INCH LONG ON FULL SIZE DRAWING. IF NOT ONE INCH LONG ON THIS DRAWING, ADJUST SCALES ACCORDINGLY

Woodard & Curran

REV	DATE	BY	APVD	DESCRIPTION
1	07/22	CT	TV	RECORD DRAWING

DESIGNED M. TAKEMOTO
DRAWN S. JUNG
CHECKED M. NAKAMOTO

SUBMITTED: MARK TAKEMOTO, RMC PROJECT ENGINEER CE-64369
APPROVED: STEVE CLARY, RMC ENGINEER CE-30318

SAUSALITO · MARIN CITY SANITARY DISTRICT

TREATMENT AND WET WEATHER FLOW UPGRADE

DESIGN CRITERIA

DWG NO G-4
SHEET NO 5 OF 226
PROJ NO 055-006
DATE JULY 2022

FILENAME: 055-006-G-4 8-01-22 12:00pm cto || XREFS: | X-SMCSD-TBLK |<<--
Last Saved By: cto 8-01-22 09:42am

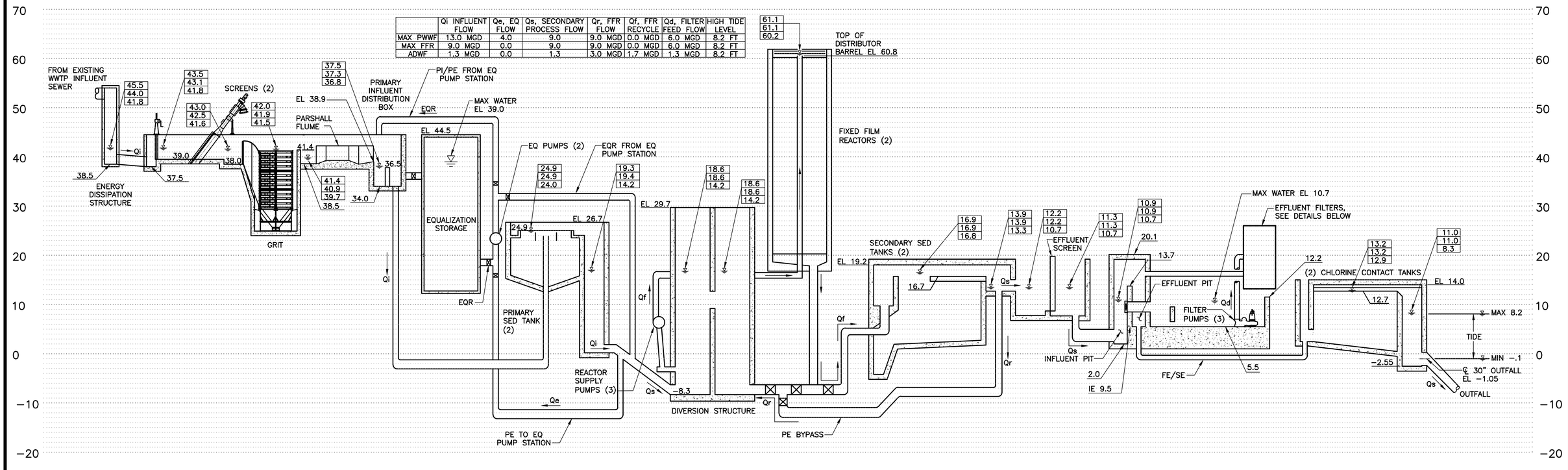

TREATMENT PLANT

HORIZONTAL NTS, VERTICAL 1"=10'

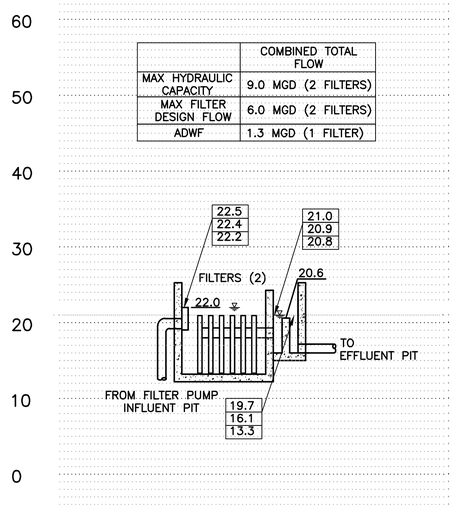

FILTERS IN PARALLEL OPERATION

HORIZONTAL NTS, VERTICAL 1"=10'

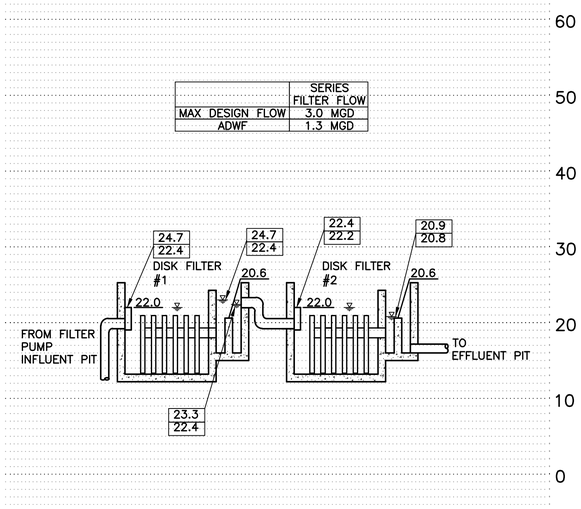

FILTERS IN SERIES OPERATION

HORIZONTAL NTS, VERTICAL 1"=10'

NOTES:

1. HYDRAULIC PROFILE BASED ON EQUALIZATION OF PRIMARY EFFLUENT AT MAX PWWF CONDITION.

RECORD DRAWING

THIS RECORD DRAWING HAS BEEN PREPARED FROM THE ORIGINAL CONTRACT DOCUMENTS SIGNED AND SEALED BY THE RESPONSIBLE ENGINEER OF RECORD. ADDITIONAL INFORMATION HAS BEEN PROVIDED BY OTHERS TO REPRESENT AS-CONSTRUCTED CONDITION AND IS SHOWN ON THESE RECORD DRAWINGS. THE RESPONSIBLE ENGINEER OF RECORD CANNOT VERIFY THE ACCURACY OF THE AS-CONSTRUCTED CONDITION INFORMATION REPRESENTED ON THE RECORD DRAWINGS.

0" — 1" — VERIFY SCALES — BAR IS ONE INCH LONG ON FULL SIZE DRAWING. IF NOT ONE INCH LONG ON THIS DRAWING, ADJUST SCALES ACCORDINGLY

Woodard & Curran

REV	DATE	BY	APVD	DESCRIPTION
1	07/22	CT	TV	RECORD DRAWING

DESIGNED S. MASUDA
DRAWN J. MAY
CHECKED M. NAKAMOTO

SUBMITTED: MARK TAKEMOTO, RMC PROJECT ENGINEER CE-64369
APPROVED: STEVE CLARY, RMC ENGINEER CE-30318

SAUSALITO · MARIN CITY SANITARY DISTRICT

TREATMENT AND WET WEATHER FLOW UPGRADE

HYDRAULIC PROFILE

DWG NO G-5
SHEET NO 6 OF 226
PROJ NO 055-006
DATE JULY 2022

FILENAME: 0055-006-G-5 8-01-22 12:00pm cto || XREFS: X-SMCSD-TBLK |<<--

Last Saved By: cto 8-01-22 09:43am

PROCESS FLUID PIPE SCHEDULE

FLUID ABBREV	PROCESS FLUID	Pipe Type (1) Buried	Pipe Type (1) Exposed	Pipe Testing (2) Pressure (PSI)	Pipe Testing (2) Fluid	Special Requirements
1W	POTABLE WATER	41,91	41,91	125	WATER	
2W	NON-POTABLE WATER	NA	NA	NA	NA	
3W	TREATED PLANT EFFLUENT	91,92,96	~~22~~,41,91	150	WATER	
AL	ALUM	NA	NA	NA	NA	
BW	EFFLUENT FILTER BACKWASH	91,96	~~26,27~~,91,96	50	WATER	
CA	COMPRESSED AIR	NA	NA	NA	NA	
CHA	CHANNEL AIR	NA	45	25	AIR	
CLS	CHLORINE SOLUTION, HYPOCHLORITE	NA	NA	NA	NA	
D	DRAIN	91,93	91	PER SPEC 02640	WATER	
DG	DIGESTER GAS	91	91	25	AIR	
DOF	DIGESTER OVERFLOW	NA	NA	NA	NA	
FOR	DIESEL FUEL RETURN	21	21	50	WATER	**PROVIDE NON-METALLIC CONTAINMENT PIPING**
FOS	DIESEL FUEL SUPPLY	21	21	50	WATER	**PROVIDE NON-METALLIC CONTAINMENT PIPING**
DS	DIGESTED SLUDGE	NA	NA	NA	NA	
DSM	DIGESTED SLUDGE MIXING	NA	NA	NA	NA	
DSR	DIGESTED SLUDGE RETURN	NA	NA	NA	NA	
DSU	DIGESTED SUPERNATANT	NA	NA	NA	NA	
EA	EXHAUST AIR	NA	NA	NA	NA	
EQR	EQUALIZATION BASIN RETURN	91,96	11,27,91,96	50	WATER	
EQS	EQUALIZATION BASIN SUPPLY	91,96	11,27,91,96	50	WATER	
FA	FOUL AIR	61,91,96	61, **91**	15	AIR	
FC	FERRIC CHLORIDE	98	91,98	30	WATER	
FDS	FINAL DIGESTED SLUDGE	NA	NA	NA	NA	
FE	FINAL EFFLUENT	~~91,92,96~~, NA	~~25,27,91,96~~, NA	~~60~~, NA	~~WATER~~, NA	
FS	FIRE SPRINKLER	NA	NA	NA	NA	
FLE	FILTER EFFLUENT	91,92	25,27,91	25	WATER	
FT	FILTRATE	NA	NA	NA	NA	
G	GRIT	~~11,25,91,~~ **12**	~~11,25,91,~~ **12**	50	WATER	
HRSD	HEATED RECIRCULATED SLUDGE	NA	NA	NA	NA	
HWR	HOT WATER RETURN	NA	NA	NA	NA	
HWS	HOT WATER SUPPLY	NA	NA	NA	NA	
IA	INSTRUMENT AIR	NA	NA	NA	NA	
INF	INFLUENT SEWER	~~95~~, 96	~~96~~	PER SPEC 02640	WATER	
NG	NATURAL GAS	NA	NA	NA	NA	
OA	OUTSIDE AIR	NA	NA	NA	NA	
OF	OVERFLOW	91,~~96~~	91,~~96~~	25	WATER	
P	POLYMER	NA	NA	NA	NA	
PD	PUMPED DRAIN	~~91,96~~, NA	~~25,27,91,96~~, NA	~~60~~, NA	~~WATER~~, NA	
PDS	PRIMARY DIGESTED SLUDGE	NA	NA	NA	NA	
PE	PRIMARY EFFLUENT	~~91,92~~,95	~~25~~,27,91,95	60	WATER	
PI	PRIMARY INFLUENT	~~91,92~~,95	~~25,27~~,91,95, 96	60	WATER	
PS	PRIMARY SLUDGE	91,96	~~25~~,27,91,96	60	WATER	
R	PLANT DRAINAGE RETURN	91,96	~~25,27~~,91,96	50	WATER	
SB	SODIUM BISULFITE	NA	NA	NA	NA	
SBR	SPENT BACKWASH RETURN	25	91	50	WATER	
SC	SCREENINGS	91	91	25	WATER	
SCUM	SCUM	91	91	100	WATER	
SD	STORM DRAIN	93,97	NA	PER SPEC 02640	WATER	
SE	SECONDARY EFFLUENT	~~91,92,96~~, NA	~~25,27,91,96~~	50	WATER	
SEP	SEPTAGE	NA	NA	~~80~~, NA	~~WATER~~, NA	
SG	SLUDGE GAS	NA	NA	NA	NA	
SLUDGE	SLUDGE	NA	NA	NA	NA	
SS	SANITARY SEWER	91,93,96	91,96	PER SPEC 02640	WATER	
SW	SEAL WATER	NA	41, 91	125	WATER	
TS	THICKENED SLUDGE	NA	NA	NA	NA	
TWAS	THICKENED WASTE SLUDGE	NA	NA	NA	NA	
V	VENT	NA	~~21~~,91	125	WATER	
WS	WASTE SLUDGE	NA	NA	NA	NA	

JOINT TYPES

BF	BUTT FUSION
BLO	BUTT LAMINATED OVERLAY
BSG	BELL SPIGOT, GASKET
BSW	BELL SPIGOT WELD
BW	BUTT WELD
CJ	COMPRESSION JOINTS
CW	SOCKET WELDED
F	FLANGED
FJ	FLARED JOINTS
GC	GROOVED COUPLING
GTG	GROUTED TONGUE AND GROOVE
MJ	MECHANIAL JOINT
SC	SLEEVE COUPLING
SE	SCREWED ENDS
SJ	SOLDERED JOINTS
SW	SOLVENT WELDED
THD	THREADED

NOTES:
(1) A PIPE MATERIAL SPECIFICALLY DESIGNATED ON THE DRAWINGS SHALL TAKE PRECEDENCE OVER OPTIONAL MATERIALS SHOWN IN THE TABLE. THIS SYMBOL ◆— INDICATES A PIPE MATERIAL CHANGE.

(2) REFER TO SPECIFICATION SECTION 02640 – PIPELINE TESTING AND DISINFECTION FOR HYDRAULIC TESTING REQUIREMENTS AND LEAKAGE ALLOWANCES.

(3) INSPECTION AND TESTING SHALL BE IN ACCORDANCE WITH APPLICABLE PLUMBING CODE.

PIPE MATERIAL SCHEDULE

Pipe Mtl Number	PIPE MATERIAL	Specification Section	Type/ Rating	Joint Type (a) Buried	Joint Type (a) Exposed	SPECIAL THRUST RESTRAINT REQUIREMENTS (NOTE 3)	CORROSION PROTECTION REQUIREMENTS (NOTE 4)
	DUCTILE IRON						
11	DIP, C-151, CML	02565	250	BSG,F	F,GC	MECH. RESTRAINTS OR ANCHOR BLOCKS AT BENDS	**COATING AND** CATHODIC PROTECTION
12	**DIP, C-151, GLASS LINED**	**15000**	**250**	**BSG,F**	**F,GC**	**MECH. RESTRAINTS OR ANCHOR BLOCKS AT BENDS**	**COATING AND CATHODIC PROTECTION**
	STEEL PIPE						
21	STEEL, ASTM A53 (<3 INCH)	15025	SCH 40	SC,BW,CW	SC,F,BW,CW		COATING AND CATHODIC PROTECTION
	STEEL, ASTM A53 (3 - 12 INCH)	15025	SCH 40	GC,BSW	F,GC,BW		COATING AND CATHODIC PROTECTION
	STEEL, ASTM A53 (> 12 INCH)	15025	1/4" Wall	GC,BSW	F,GC,BW		COATING AND CATHODIC PROTECTION
~~22~~	~~GALV STEEL, ASTM A106~~	~~15025~~	~~SCH 40~~	~~SE~~	~~GC,BW~~		
~~23~~	~~STEEL, ASTM A106~~	~~15025~~	~~SCH 80~~	~~CW~~	~~CW~~		~~COATING AND CATHODIC PROTECTION~~
25	~~STEEL, AWWA C200, CML&C~~	02570	~~1/4" Wall~~	BSW	F,GC,BW		~~CORROSION MONITORING OR CATHODIC PROTECTION~~
27	STEEL, AWWA C200, FUSION BONDED EPOXY	02571	1/4" Wall	BSW	F,GC,BW		**COATING AND CATHODIC PROTECTION**
	ALLOY						
41	COPPER	15036	Type K	SJ,FJ,CJ,SE	SJ,FJ,CJ,SE		**COATING**
45	STAINLESS STEEL - 316		SCH 10	BW,SC,F	BW,SC,F		
46	STAINLESS STEEL - 316 (UP TO 2.5 INCH)	15030	SCH 40	SE	SE		
	STAINLESS STEEL - 316 (>3 INCH)	15030	SCH 40	BW,CW	BW,CW,F		
47	STAINLESS STEEL - 304	15030	SCH 10	BW,SC,F	BW,SC,F		**COATING**
	FRP						
61	FRP DUCTING	02510		BLO	BLO		**COATING**
	PLASTIC						
91	PVC (1)	15060	SCH 80	SW	SW		**COATING**
92	PVC C-900,905	02597	DR-18	BSG	BSG	MECH. RESTRAINTS OR ANCHOR BLOCKS AT BENDS	**COATING AND** CATHODIC PROTECTION ON ALL METALLIC COMPONENTS
93	PVC GRAVITY SEWER PIPE	02595	SDR-35	BSG	BSG		**COATING AND** CATHODIC PROTECTION ON ALL METALLIC COMPONENTS
95	HDPE, SOLID WALL, C-906, ~~DIPS (OD)~~, **IPS (OD)**	02590	~~DR 21~~, **DR-17**	BF	BF,F		**COATING AND** CATHODIC PROTECTION ON ALL METALLIC COMPONENTS
96	HDPE, SOLID WALL, C-906, **IPS (OD)**	02590	~~DR 9~~, **DR11**	BF	BF,F		**COATING AND** CATHODIC PROTECTION ON ALL METALLIC COMPONENTS
97	**HDPE, PROFILE WALL**	**02591**	**RSC-63**	**BSW**	**BSW**		**COATING AND** CATHODIC PROTECTION ON ALL METALLIC COMPONENTS
98	RPVC TUBING IN PVC CONTAINMENT PIPE	15061	100	SW	SW		**COATING**

NOTES:
(1) SCH 80 PVC MAY ONLY BE USED FOR PIPE DIAMETERS 10 INCHES AND SMALLER.
(2) THIS SCHEDULE IDENTIFIES CERTAIN THRUST RESTRAINT AND CORROSION PROTECTION REQUIREMENTS, FOR CLARITY. NOT ALL REQUIREMENTS ARE IDENTIFIED. CONTRACTOR SHALL FULLY COMPLY WITH ALL REQUIREMENTS OF THE CONTRACT DOCUMENTS.
(3) MECHANICAL RESTRAINTS PER PIPE SPECIFICATIONS. ANCHOR BLOCKS PER DETAIL C250, C251 AND C252.
(4) CORROSION PROTECTION REQUIREMENTS PER CP DRAWINGS AND SPECIFICATIONS.
(5) STEEL OR DUCTILE IRON PIPE SHALL BE USED AT ALL PENETRATIONS THROUGH CONCRETE STRUCTURES.

PIPING

DOUBLE LINE / SINGLE LINE

- EXISTING PIPE (FUTURE PIPE IF DESIGNATED AS FUTURE)
- EXISTING PIPE TO BE ABANDONED
- EXISTING PIPE TO BE REMOVED
- NEW PIPE
- BUTT WELDED JOINT
- FLANGED JOINT
- GROOVED END JOINT
- HUB & SPIGOT JOINT
- FLEXIBLE COUPLING
- FLANGED COUPLING ADAPTER
- MECHANICAL JOINT
- ELASTOMER BELLOWS EXP JOINT
- ELBOW DOWN
- ELBOW UP
- TEE DOWN
- TEE UP
- LATERAL DOWN
- LATERAL UP
- CONCENTRIC REDUCER
- ECCENTRIC REDUCER
- UNION
- CAP (BUTT WELDED)
- CAP (SCREWED OR SOCKET WELDED)
- ELBOW, 90 DEGREE
- CROSS
- TEE
- ELBOW, 45 DEGREE
- LATERAL
- CHANGE IN PIPE MATERIAL (COUPLING MAY VARY)
- BLIND FLANGE

PIPING DESIGNATION

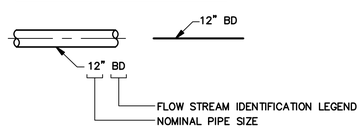

NOTE:
FLOW STREAM IDENTIFICATION LEGEND SHALL BE USED FOR PIPING SCHEDULE SELECTION. ADDITIONAL DESCRIPTION IS USED ONLY TO DESCRIBE THE PROCESS FUNCTION OF THE PIPE. ADDITIONAL DESCRIPTIONS ARE FROM THE STANDARD ABBREVIATIONS DRAWING.

YARD PIPING LEGEND

- 24" FM — FORCEMAIN
- BO — BLOWOFF (PLAN)
- AIR RELEASE VALVE
- 12" SD — STORM DRAIN MAIN
- 8" SS — SANITARY SEWER MAIN
- 8" W — WATER MAIN
- E — ELEC CONDUIT (UNDERGROUND)
- E (O/H) — ELEC CABLES (OVERHEAD)
- T — TELECOM (POSSIBLY FIBRE OPTIC) CONDUIT
- FO — TELECOM/FIBRE OPTIC CONDUIT
- 8" GAS — GAS PIPELINE
- 18" SD?? — EXISTENCE OR SIZE OF UTILITY NOT CONFIRMED (??)
- STORM DRAIN INLET
- MANHOLE
- WATER METER
- FIRE HYDRANT
- WATER VALVE

VALVES

- GATE
- KNIFE GATE
- BALL
- GLOBE
- BUTTERFLY
- VEE BALL
- ECCENTRIC PLUG
- NEEDLE
- PLUG OR COCK
- BALL CHECK
- SWING OR SILENT CHECK
- DOUBLE DOOR CHECK
- PINCH
- DIAPHRAGM
- HOSE VALVE
- PRESSURE RELIEF
- REGULATED SIDE PRESSURE CONTROL
- AIR RELIEF VALVE AIR AND VACUUM RELIEF VALVE

MISCELLANEOUS PIPING COMPONENTS

- BALANCING DAMPER
- FLEXIBLE (ELASTOMER) PIPE CONNECTION
- WYE–STRAINER
- BASKET STRAINER
- QUICK DISCONNECT COUPLING
- HOSE RACK
- SAFETY SHOWER/EYEWASH
- CO — CLEANOUT
- HD — HUB DRAIN
- FD — FLOOR DRAIN
- F — FLUSHING CONNECTION
- FE BD–1–2 — TYPICAL INSTRUMENT BUBBLE (SEE I&C LEGEND)

GENERAL PIPING NOTES

1. SYMBOLS SHOWN HERE FOR SINGLE LINE FITTINGS ARE SHOWN WITH SOCKET TYPE ENDS. END CONNECTIONS SHALL BE PER SPECIFICATIONS.
2. THIS IS A STANDARD LEGEND SHEET. NOT ALL ITEMS SHOWN ARE USED ON THIS PROJECT.
3. SOME SYMBOLS MAY BE SHOWN DIFFERENTLY ON DRAWINGS AND LABELED ACCORDINGLY.
4. NOT ALL PIPING AND VALVES ARE SHOWN ON THE MECHANICAL DRAWINGS. SEE INSTRUMENTATION AND CONTROL DRAWINGS FOR ADDITIONAL PIPING AND VALVES.

RECORD DRAWING
THIS RECORD DRAWING HAS BEEN PREPARED FROM THE ORIGINAL CONTRACT DOCUMENTS SIGNED AND SEALED BY THE RESPONSIBLE ENGINEER OF RECORD. ADDITIONAL INFORMATION HAS BEEN PROVIDED BY OTHERS TO REPRESENT AS-CONSTRUCTED CONDITION AND IS SHOWN ON THESE RECORD DRAWINGS. THE RESPONSIBLE ENGINEER OF RECORD CANNOT VERIFY THE ACCURACY OF THE AS-CONSTRUCTED CONDITION INFORMATION REPRESENTED ON THE RECORD DRAWINGS.

0" — 1" VERIFY SCALES — BAR IS ONE INCH LONG ON FULL SIZE DRAWING. IF NOT ONE INCH LONG ON THIS DRAWING, ADJUST SCALES ACCORDINGLY

Woodard & Curran

REV	DATE	BY	APVD	DESCRIPTION
1	07/22	CT	TV	RECORD DRAWING

DESIGNED M. TAKEMOTO
DRAWN S. JUNG
CHECKED M. NAKAMOTO

SUBMITTED: MARK TAKEMOTO, RMC PROJECT ENGINEER CE-64369
APPROVED: STEVE CLARY, RMC ENGINEER CE-30318

SAUSALITO · MARIN CITY SANITARY DISTRICT

TREATMENT AND WET WEATHER FLOW UPGRADE

PIPE SCHEDULE AND LEGENDS

DWG NO G-6
SHEET NO 7 OF 226
PROJ NO 055-006
DATE JULY 2022

FILENAME: 0055-006-G-6 8-01-22 12:01pm cto ‖ XREFS: ‖ X-SMCSD-TBLK ‖<<--
Last Saved By: cto 8-01-22 09:43am

SCALE: 1"=20'

0 20 40 60

SCALE IN FEET

SAN FRANCISCO BAY

PRIMARY CLARIFIER NO. 1

DEWATERING BLDG

PROCESS LEVEL

FFR

FFR

SAND FILTERS

MAINTENANCE LEVEL

ADMIN BLDG

ADMIN LEVEL

STORAGE LEVEL

LOWER ACCESS ROAD

PLANT ACCESS ROAD

EAST ROAD

FORT BAKER ROAD

ALEXANDER AVENUE

ALEXANDER AVENUE

PLAN
1" = 20'

FILENAME: 055-006-G-7 8-01-22 12:01pm cto || XREFS: X-SMCSD-TBLK | X-Topo Survey | X-Treatment Plant site plan |<<--

RECORD DRAWING

THIS RECORD DRAWING HAS BEEN PREPARED FROM THE ORIGINAL CONTRACT DOCUMENTS SIGNED AND SEALED BY THE RESPONSIBLE ENGINEER OF RECORD. ADDITIONAL INFORMATION HAS BEEN PROVIDED BY OTHERS TO REPRESENT AS-CONSTRUCTED CONDITION AND IS SHOWN ON THESE RECORD DRAWINGS. THE RESPONSIBLE ENGINEER OF RECORD CANNOT VERIFY THE ACCURACY OF THE AS-CONSTRUCTED CONDITION INFORMATION REPRESENTED ON THE RECORD DRAWINGS.

0" — 1"
VERIFY SCALES
BAR IS ONE INCH LONG ON FULL SIZE DRAWING. IF NOT ONE INCH LONG ON THIS DRAWING, ADJUST SCALES ACCORDINGLY

Woodard & Curran

REV	DATE	BY	APVD	DESCRIPTION
1	07/22	CT	TV	RECORD DRAWING

DESIGNED M. TAKEMOTO
DRAWN C. TO
CHECKED M. NAKAMOTO

SUBMITTED: MARK TAKEMOTO, RMC PROJECT ENGINEER CE-64369

APPROVED: STEVE CLARY, RMC ENGINEER CE-30318

SAUSALITO · MARIN CITY SANITARY DISTRICT

TREATMENT AND WET WEATHER FLOW UPGRADE

EXISTING SITE PLAN

DWG NO	G-7
SHEET NO	8 OF 226
PROJ NO	055-006
DATE	JULY 2022

Last Saved By: cto 8-01-22 09:43am



STAGING AREAS PLAN
1" = 1700'

NOTES:

1. CONTRACTOR SHALL BE RESPONSIBLE FOR PROVIDING SECURITY FOR STAGING AREAS. THE DISTRICT SHALL NOT BE RESPONSIBLE FOR ANY STOLEN OR DAMAGED EQUIPMENT, MATERIALS, ETC.
2. THE STORAGE YARD AT THE WWTP, JUST DOWNHILL FROM THE ENTRANCE, MAY BE USED FOR CONTRACTOR STAGING AS LONG AS ACCESS IS MAINTAINED FOR DISTRICT STAFF. TEMPORARY RELOCATION OF TOTES, ETC. TO MAKE ROOM FOR LARGE EQUIPMENT MAY BE ACCEPTABLE WITH PRIOR APPROVAL FROM THE CONSTRUCTION MANAGER.
3. THE CONTRACTOR SHALL BE RESPONSIBLE FOR ALL COSTS ASSOCIATED WITH LEASING OR RENTING STAGING AREAS.
4. USE OF STAGING AREAS SHALL CONFORM TO THE REQUIREMENTS OF SECTION 01500.



STAGING AREA A PLAN
NOT TO SCALE

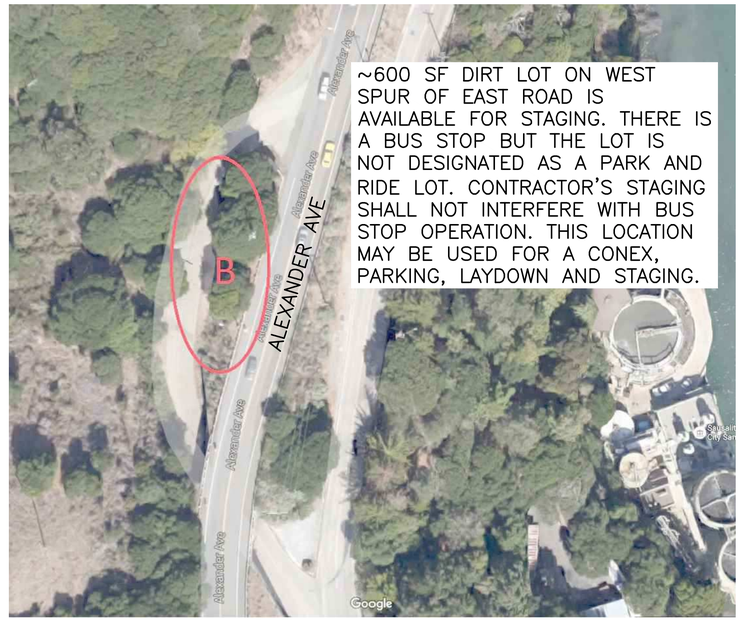

STAGING AREA B PLAN
NOT TO SCALE



STAGING AREA C PLAN
NOT TO SCALE



STAGING AREA D PLAN
NOT TO SCALE

FILENAME: 0055-006-C-8 8-01-22 12:02pm cto || XREFS: | X-SMCSD-TBLK | X-Topo Survey | X-Treatment Plant site plan |<<--
Last Saved By: cto 8-01-22 09:44am

RECORD DRAWING
THIS RECORD DRAWING HAS BEEN PREPARED FROM THE ORIGINAL CONTRACT DOCUMENTS SIGNED AND SEALED BY THE RESPONSIBLE ENGINEER OF RECORD. ADDITIONAL INFORMATION HAS BEEN PROVIDED BY OTHERS TO REPRESENT AS-CONSTRUCTED CONDITION AND IS SHOWN ON THESE RECORD DRAWINGS. THE RESPONSIBLE ENGINEER OF RECORD CANNOT VERIFY THE ACCURACY OF THE AS-CONSTRUCTED CONDITION INFORMATION REPRESENTED ON THE RECORD DRAWINGS.

0" — 1" — VERIFY SCALES — BAR IS ONE INCH LONG ON FULL SIZE DRAWING. IF NOT ONE INCH LONG ON THIS DRAWING, ADJUST SCALES ACCORDINGLY

Woodard & Curran

REV	DATE	BY	APVD	DESCRIPTION
1	07/22	CT	TV	RECORD DRAWING

DESIGNED M. TAKEMOTO
DRAWN C. TO
CHECKED M. NAKAMOTO

SUBMITTED: MARK TAKEMOTO, RMC PROJECT ENGINEER CE-64369
APPROVED: STEVE CLARY, RMC ENGINEER CE-30318

SAUSALITO · MARIN CITY SANITARY DISTRICT

TREATMENT AND WET WEATHER FLOW UPGRADE

STAGING AREA LOCATIONS

DWG NO	G-8
SHEET NO	9 OF 226
PROJ NO	055-006
DATE	JULY 2022

DEMOLITION LEGEND

B-11	SOIL BORING
103	BENCHMARK/CONTROL POINT
PH10	POTHOLE
	RIGHT OF WAY LINE
105	CONTOUR LINE
	STREET LIGHT (SINGLE ARM)
	STREET LIGHT (DOUBLE ARM)
	STREET SIGN
+ 101.3	SPOT ELEVATION
	SLOPE DIRECTION
X X	FENCE
	FLOW LINE
	ABANDONED
XXXXXXXXXXXXX	TO BE REMOVED
	DEMOLITION

GENERAL DEMOLITION NOTES:

1. REFERENCE DRAWINGS FOR STRUCTURES TO BE DEMOLISHED ARE INCLUDED AT THE END OF THE DRAWING SET.
2. DEMOLITION SHALL BE IN ACCORDANCE WITH SECTION 02050 RECONSTRUCTION AND SEQUENCING AND CONSTRAINTS IN SECTION 01010.
3. FOR PIPELINES TO BE CUT AND CAP, CONTRACTOR SHALL INSTALL THRUST RESTRAINT AS NECESSARY TO PREVENT CAP PIPELINES FROM DISCONNECTION AND LEAKAGE DURING OPERATION.
4. ALL MATERIALS/ITEMS IDENTIFIED "TO BE REMOVED" AND/OR "REMOVE" SHALL BE DISPOSED OF BY THE CONTRACTOR IN ACCORDANCE WITH THE CONTRACT DOCUMENTS.
5. TRENCHES FOR DEMOLITION SHALL BE BACKFILLED AND FINISHED IN ACCORDANCE SECTION 02200 EARTHWORK.
6. DEMOLITION SHALL BE IN ACCORDANCE WITH THE HAZARDOUS MATERIALS TESTING REPORT AND SECTION 02081 HAZARDOUS MATERIALS ABATEMENT
7. CONTRACTOR SHALL PROVIDE TEMPORARY BARRIERS AND/OR FALL PROTECTION AROUND FALL HAZARDS CREATED DURING AND AFTER DEMOLITION.

RECORD DRAWING
THIS RECORD DRAWING HAS BEEN PREPARED FROM THE ORIGINAL CONTRACT DOCUMENTS SIGNED AND SEALED BY THE RESPONSIBLE ENGINEER OF RECORD. ADDITIONAL INFORMATION HAS BEEN PROVIDED BY OTHERS TO REPRESENT AS-CONSTRUCTED CONDITION AND IS SHOWN ON THESE RECORD DRAWINGS. THE RESPONSIBLE ENGINEER OF RECORD CANNOT VERIFY THE ACCURACY OF THE AS-CONSTRUCTED CONDITION INFORMATION REPRESENTED ON THE RECORD DRAWINGS.

0" 1" — VERIFY SCALES — BAR IS ONE INCH LONG ON FULL SIZE DRAWING. IF NOT ONE INCH LONG ON THIS DRAWING, ADJUST SCALES ACCORDINGLY

Woodard & Curran

REV	DATE	BY	APVD	DESCRIPTION
1	07/22	CT	TV	RECORD DRAWING

DESIGNED M. TAKEMOTO
DRAWN S. JUNG
CHECKED M. NAKAMOTO

SUBMITTED: MARK TAKEMOTO, RMC PROJECT ENGINEER CE-64369
APPROVED: STEVE CLARY, RMC ENGINEER CE-30318

SAUSALITO · MARIN CITY SANITARY DISTRICT

TREATMENT AND WET WEATHER FLOW UPGRADE

DEMOLITION LEGEND AND NOTES

DWG NO D-1
SHEET NO 10 OF 226
PROJ NO 055-006
DATE JULY 2022

FILENAME: 0055-006-D-1 8-01-22 12:02pm cto || XREFS:| X-SMCSD-TBLK |<<--

Last Saved By: cto 8-01-22 10:01am

SCALE: 1"=20'

0 20 40 60

SCALE IN FEET

SAN FRANCISCO BAY

NOTES:
1. LOCATION OF EXISTING UTILITIES SHOWN IS APPROXIMATE. NOT ALL UTILITIES MAY BE SHOWN. CONTRACTOR SHALL VERIFY UTILITY LOCATION AND SERVICE IN THE FIELD PRIOR TO DEMOLITION.
2. ALL UTILITIES AND STRUCTURES ON THE TREATMENT PLANT SIDE OF THE BOUNDARY OF DEMOLITION SHALL BE DEMOLISHED UNLESS NOTED OTHERWISE. CONTRACTOR SHALL NOTIFY THE CONSTRUCTION MANAGER IF UNKNOWN UTILITIES OR STRUCTURES ARE ENCOUNTERED. AT THE DISCRETION OF THE CONSTRUCTION MANAGER THESE UTILITIES OR STRUCTURES SHALL BE DEMOLISHED AT NO ADDITIONAL COST TO THE OWNER.
3. SEE SHEET E100-2 FOR ELECTRICAL, INSTRUMENTATION AND COMMUNICATION DEMOLITION REQUIREMENTS.
3. ALL WORK SHALL BE PERFORMED IN ACCORDANCE WITH SECTION 01040.

REMOVE TOP PORTION OF CONCRETE WALL. REMAINING PORTION OF THE WALL SHALL BE FLUSH WITH EXISTING GRADE. CONTRACTOR SHALL REPAIR THE EXPOSED TOP OF WALL SURFACE TO PROVIDE A CLEAN AND FINISHED APPEARANCE

CAUSEWAY HAS A FLOOR LOADING CAPACITY OF 250 LBS PER SQUARE FOOT

SEE C100-2 FOR BOUNDARY OF WALL REMOVAL

PROTECT MANHOLE IN PLACE

DEMOLISH CURB

DEMOLISH ODOR CONTROL DUCT AS REQUIRE FOR NEW DUCT INSTALLATION. SEE M100-4.

BOUNDARY OF ROAD DEMOLITION

SEE D-10

CAUTION! EXISTING UNDERGROUND 4" PG&E PRIMARY DUCT 3'± COVER, NO ENCASEMENT (HIGH VOLTAGE)

DEMOLISH CONCRETE PLATFORM AND ROAD. DEMOLISH EXISTING (2) 30" CAISSONS, 3'-6"x3'-2" BEAM AND PORTIONS OF (2) B1 BEAMS AS REQUIRED FOR CONSTRUCTION OF NEW FACILITIES

REMOVE TREES – SEE L10-1 FOR TREE REMOVAL PLAN

DEMOLISH

BOUNDARY OF DEMOLITION/ EXCAVATION

DEMOLISH

(2) 2" 1W

PREVIOUSLY ABANDONED 4" DIGESTED SLUDGE, 4" RW, AND 2-1/2" RW. DEMOLISH AS REQUIRED FOR SOIL NAIL WALL CONSTRUCTION.

HEAVY VEGETATION THROUGHOUT HILLSIDE

CAUTION! EXISTING UNDERGROUND 12KV POWER LINE

28" INF SEWER

TELEPHONE LINE

ABANDON 8" SS SEE D-3

REMOVE FFR MEDIA SEE D300-2

DEMOLISH EFFLUENT SCREEN SEE D400-1

REMOVE FILTER FEED PUMPS SEE D400-1

FOR ENLARGED AREA SEE DWG D-3

DEMOLISH SAND FILTERS SEE D400-1

REMOVE PAVING AND HILLSIDE CUT SEE DWG C100-3

REMOVE TREES AS NEEDED – SEE L1.1 FOR TREE PRESERVATION PLAN

REMOVE TREES AS NEEDED – SEE L1.1 FOR TREE PRESERVATION PLAN

PLANT ACCESS ROAD

EAST ROAD

FORT BAKER ROAD

ALEXANDER AVENUE

PLAN
1" = 20'

RECORD DRAWING
THIS RECORD DRAWING HAS BEEN PREPARED FROM THE ORIGINAL CONTRACT DOCUMENTS SIGNED AND SEALED BY THE RESPONSIBLE ENGINEER OF RECORD. ADDITIONAL INFORMATION HAS BEEN PROVIDED BY OTHERS TO REPRESENT AS-CONSTRUCTED CONDITION AND IS SHOWN ON THESE RECORD DRAWINGS. THE RESPONSIBLE ENGINEER OF RECORD CANNOT VERIFY THE ACCURACY OF THE AS-CONSTRUCTED CONDITION INFORMATION REPRESENTED ON THE RECORD DRAWINGS.

0" 1" — VERIFY SCALES — BAR IS ONE INCH LONG ON FULL SIZE DRAWING. IF NOT ONE INCH LONG ON THIS DRAWING, ADJUST SCALES ACCORDINGLY

Woodard & Curran

REV	DATE	BY	APVD	DESCRIPTION
1	07/22	CT	TV	RECORD DRAWING

DESIGNED M. TAKEMOTO
DRAWN C. TO
CHECKED M. NAKAMOTO

SUBMITTED: MARK TAKEMOTO, RMC PROJECT ENGINEER CE-64369
APPROVED: STEVE CLARY, RMC ENGINEER CE-30318

SAUSALITO · MARIN CITY SANITARY DISTRICT

TREATMENT AND WET WEATHER FLOW UPGRADE

OVERALL SITE DEMOLITION PLAN

DWG NO D-2
SHEET NO 11 OF 226
PROJ NO 055-006
DATE JULY 2022

FILENAME: 055-006-D-2 8-01-22 12:02pm cto | XREFS: | X-SMCSD-TBLK | X-2012_topo_survey | X-Treatment Plant site plan | X-Site |<<--

Last Saved By: cto 8-01-22 10:00am

SCALE IN FEET 0 6 12 18

DEMOLISH CURB

DEMOLISH WOOD WALL

DEMOLISH ENERGY DISSIPATION STRUCTURE, SEE DWG D-4

DEMOLISH WOOD WALL

BOUNDARY OF ROAD DEMOLITION

DEMOLISH ODOR CONTROL DUCT AS REQUIRED FOR NEW DUCT INSTALLATION. SEE M100-4.

DEMOLISH CONCRETE SWALE

DEMOLISH 20" PI. SEE NOTE 2.

DEMOLISH STAIRS

SEE D-10 (5)

REMOVE DIESEL TANK SEE D-9

DEMOLISH STAIRS

SEE D-10 (4)

DEMOLISH (2) 4" DG AND 4" 3W LINES. SEE NOTE 3

DEMOLISH 2" 1W. SEE NOTE 2

RELOCATE SERVICE TRANSFORMER. SEE NOTE 3

PROTECT EXISTING RETAINING WALL IN PLACE

DEMOLISH FENCE

DEMOLISH 8" SS SEE D-5

DEMOLISH GAS SCRUBBER. SEE D-6

DEMOLISH AND REROUTE 6" SUPERNATANT RETURN. SEE NOTE 2

DEMOLISH FILTER BUILDING SEE D-7

EXISTING PLANT UTILITIES LOCATED ALONG WALL INCLUDING (2) 4" DG AND 4" 3W. CONTRACTOR TO LOCATE UTILITIES AND PROVIDE TEMPORARY PIPING PRIOR TO DEMOLITION. SEE NOTE 2.

DEMOLISH EXISTING CONDUITS MOUNTED TO STAIRS. SEE NOTE 3

CAUTION! EXISTING UNDERGROUND 4" PG&E PRIMARY DUCT 3'± COVER, NO ENCASEMENT (HIGH VOLTAGE)

DEMOLISH EXISTING 12" CMP. SEE NOTE 2.

DEMOLISH EXISTING WALL

DEMOLISH (2) 10" CMP

RELOCATE FERRIC CHLORIDE TANK SEE D-10 AND M100-3

DEMOLISH 6" DIGESTER SLUDGE LINE

DEMOLISH PRESSURE REGULATING VALVE. SEE NOTE 2

DEMOLISH METAL STAIRCASE

DEMOLISH: - 4" 3W - 4" SLUDGE - 4" SEWER - 2" SLUDGE GAS - 1-1/4" HWS - 1-1/4" HWR MOUNTED TO STAIRS. SEE NOTE 3

EXISTING PIPE RACK AND PIPING, PROTECT IN PLACE

DEMOLISH TANK ON PEDESTAL

EDGE OF CONCRETE ACCESS ROAD

DEMOLISH EXISTING 28" INFLUENT SEWER IN ACCORDANCE WITH SECTION 01040. SEE NOTE 2.

DEMOLISH 8" SS

DEMOLISH CONCRETE WALL

DEMOLISH 4" SEWER AND PROVIDE TEMPORARY PIPELINE. SEE NOTE 2

DEMOLISH 2" 1W SEE NOTE 2.

REMOVE TREES – SEE L10-1 FOR TREE REMOVAL PLAN

DEMOLISH CONCRETE ACCESS ROAD

CONCRETE/ AC PAVING TRANSITION

DEMOLISH CONDUITS. SEE NOTE 3

DEMOLISH: - 1-1/4" HWS - 1-1/4" HWR - 1-1/2" CL2 GAS (ABANDONED) - 1-1/2" CL2 GAS (ABANDONED) - 1-1/2" SO2 GAS (ABANDONED)

DEMOLISH ROAD AC PAVING

DEMOLISH CONCRETE DECK

DEMOLISH EXISTING CATCH BASIN

DEMOLISH CONCRETE WALL

DEMOLISH EXISTING UNDERGROUND 4" PG&E PRIMARY DUCT 3'± COVER, NO ENCASEMENT (HIGH VOLTAGE) SEE NOTE 3

HEAVY VEGETATION THROUGHOUT HILLSIDE

DEMOLISH. SEE NOTE 3

DEMOLISH AND REROUTE 1/2" FC TUBING IN 2" CONTAINMENT PIPE. SEE NOTE 2

BOUNDARY OF DEMOLITION/ EXCAVATION

DEMOLISH IRRIGATION SYSTEM

PROTECT EXISTING 12KV PULL BOX

2" 1W

CHEMICAL PULL BOX (PROTECT IN PLACE)

(2) 2" 1W

DEMOLISH SHED

EXISTING PHONE CONDUIT. SEE NOTE 3

DEMOLISH EXISTING CATCH BASIN

START OF EXISTING RETAINING WALL DEMOLISH

CAUTION! EXISTING UNDERGROUND 12KV POWER LINE

(2) 2" 1W

NOTES:

1. LOCATION OF EXISTING UTILITIES SHOWN IS APPROXIMATE. NOT ALL UTILITIES MAY BE SHOWN. CONTRACTOR SHALL VERIFY UTILITY LOCATION AND SERVICE IN THE FIELD PRIOR TO DEMOLITION.
2. FLUID SERVICE TO REMAIN IN SERVICE DURING CONSTRUCTION. TEMPORARY PIPELINE REROUTING REQUIRED. SEE SHEET C21 AND SECTION 01040.
3. SEE SHEET E100-2 FOR ELECTRICAL, INSTRUMENTATION AND COMMUNICATION DEMOLITION REQUIREMENTS.
4. ALL WORK SHALL BE PERFORMED IN ACCORDANCE WITH SECTION 01040.

PLAN
1" = 6'

RECORD DRAWING
THIS RECORD DRAWING HAS BEEN PREPARED FROM THE ORIGINAL CONTRACT DOCUMENTS SIGNED AND SEALED BY THE RESPONSIBLE ENGINEER OF RECORD. ADDITIONAL INFORMATION HAS BEEN PROVIDED BY OTHERS TO REPRESENT AS-CONSTRUCTED CONDITION AND IS SHOWN ON THESE RECORD DRAWINGS. THE RESPONSIBLE ENGINEER OF RECORD CANNOT VERIFY THE ACCURACY OF THE AS-CONSTRUCTED CONDITION INFORMATION REPRESENTED ON THE RECORD DRAWINGS.

0" — 1" VERIFY SCALES — BAR IS ONE INCH LONG ON FULL SIZE DRAWING. IF NOT ONE INCH LONG ON THIS DRAWING, ADJUST SCALES ACCORDINGLY

Woodard & Curran

REV	DATE	BY	APVD	DESCRIPTION
1	07/22	CT	TV	RECORD DRAWING

DESIGNED M. TAKEMOTO
DRAWN C. TO
CHECKED M. NAKAMOTO

SUBMITTED: MARK TAKEMOTO, RMC PROJECT ENGINEER CE-64369
APPROVED: STEVE CLARY, RMC ENGINEER CE-30318

SAUSALITO · MARIN CITY SANITARY DISTRICT

TREATMENT AND WET WEATHER FLOW UPGRADE

DEMOLITION ENLARGED PLAN

DWG NO D-3
SHEET NO 12 OF 226
PROJ NO 055-006
DATE JULY 2022

FILENAME: 0055-006-D-2 8-01-22 12:03am cto || XREFS: | X-SMCSD-TBLK | X-2012_topo_survey | X-Treatment Plant site plan | X-Site |<<--

Last Saved By: cto 8-01-22 10:00am

CIVIL LEGEND

B–11	SOIL BORING
18	BENCHMARK/CONTROL POINT
PH10	POTHOLE
	RIGHT OF WAY LINE
105	CONTOUR LINE
	STREET LIGHT (SINGLE ARM)
	STREET LIGHT (DOUBLE ARM)
	STREET SIGN
+ 101.3	SPOT ELEVATION
	SLOPE DIRECTION
X X	FENCE
	FLOW LINE
	EXISTING ABANDONED
	ABANDONED
X X X X X X X X	TO BE REMOVED
	STAGING AREA
	ELECTRICAL AND CONTROL DUCT BANKS
	GRAVEL
	AC PAVING (SECTION)
	CONCRETE PAVING (PLAN)
	NATIVE FILL OR GROUT IN STRUCTURES
	GRIND AND OVERLAY PAVING OR SLURRY SEAL
	GRASS OR LANDSCAPING AREA (TOP SOIL)
	EARTH
	CATCH BASIN
E C	ELECTRICAL OR CONTROL DUCT BANK, JUNCTION BOX
MH	MANHOLE (MH)
	REMOVAL GUARD POST C142

GENERAL GRADING NOTES:

GG1 ALL SPOT ELEVATIONS, SLOPES AND CONTOURS SHOWN ARE APPROXIMATE LOCATION AND CAN BE SCALED FROM THE DRAWING LOCATIONS. SPOT ELEVATIONS SHOWN JUST OUTSIDE BUILDINGS ARE TO BE LOCATED AT THE EXTERIOR ABOVE GROUND FACE OF WALL. SPOT ELEVATION SLOPES AND CONTOURS LOCATED BY DIMENSIONS, STATIONING OR IN PROFILE ARE TO BE ESTABLISHED AS SHOWN.

GG2 TRANSITIONS BETWEEN SLOPES SHALL BE SMOOTH AND UTILIZE VERTICAL CURVES UNLESS NOTED OTHERWISE.

GG3 FINISHED GRADING SHALL DRAIN TO CATCH BASINS. NO PONDING OR STANDING WATER SHALL BE ALLOWED.

GG4 GRADING AND PAVING DRAWINGS SHOW RIM ELEVATIONS FOR CATCH BASINS AND AREA DRAINS. FOR DRAIN PIPE SIZES AND INVERTS SEE YARD PIPING DRAWINGS.

GG5 RIM ELEVATIONS FOR CATCH BASINS ARE ALONG THE FLOWLINE OF GUTTER.

GG6 WHERE GROUND IS DISTURBED CONTRACTOR SHALL INSTALL 4" OF CALIFORNIA CERTIFIED WEED FREE RICE STRAW. STRAW SHALL BE COVERED WITH 600 GR COIR FABRIC. COIR SHALL BE OVERLAPPED BY A MINIMUM 12" AT ALL SEAMS. FABRIC SHALL BE TOED IN TO THE TOP AND BOTTOM OF THE SLOPE AS PER GGNRA BMP HANDBOOK. FABRIC SHALL BE SECURELY STAKED USING A METAL U–STAKE OR WOODEN STAKE, DEPENDING ON FINISH SITE CONDITIONS. STAKES SHALL BE INSTALLED ALONG ALL SEAMS, AS WELL AS THROUGHOUT EROSION CONTROL INSTALLATION TO SECURE FABRIC FIRMLY AND ENSURE NO STRAW MOVEMENT.

GENERAL PAVING NOTES:

GP1 FOR PAVING LOCATIONS SEE GRADING AND PAVING DRAWINGS. SEE ELECTRICAL, MECHANICAL, AND YARD PIPING DRAWINGS FOR UTILITY TRENCH PAVING.

GP2 ALL PAVED AREA SHALL DRAIN TO EXISTING OR NEW CATCH BASIN UNLESS NOTED OTHERWISE.

GP3 WHERE AREAS ARE TO BE REPAVED UTILITY BOXES AND VAULTS SHALL BE PROTECTED IN PLACE. PAVED AREAS SHALL BE GRADED TO DRAIN TO CATCH BASINS UNLESS OTHERWISE NOTED.

GP4 STRIPING SHALL BE IN ACCORDANCE WITH CALTRANS STANDARD SPECIFICATION SECTION 84.

GP5 FOR AREAS IDENTIFIED TO BE GRIND AND OVERLAY PAVING OR SLURRY SEAL OR CRACK SEAL, THE CONTRACTOR SHALL SUBMIT PAVING PLANS TO THE ENGINEER DESIGNATING PAVEMENT RESURFACING PLANS. ENGINEER SHALL RECEIVE AND ACCEPT PLAN.

GENERAL CATHODIC PROTECTION NOTES:

GCP1 CONTRACTOR SHALL INSTALL CATHODIC PROTECTION SYSTEMS AS REQUIRED BY THE SPECIFICATIONS AND IN ACCORDANCE WITH DRAWING CP–1 TO CP–2 AND THE PIPE SCHEDULES ON DRAWING G–6.

GENERAL SURVEY NOTES:

CONTROL POINT LIST

POINT	NORTHING	EASTING	ELEVATION
18	2135368.790	5990589.520	109.54
19	2135451.920	5990552.320	119.56

SURVEY NOTES

THE HORIZONTAL DISTANCES AND BASIS OF BEARINGS FOR THIS SURVEY ARE NAD '83, CALIFORNIA COORDINATES, ZONE THREE. ELEVATIONS ARE REFERENCED TO NAVD88 BASED ON U.S.C. & O.S. PT. M108 1932 ELEV = 11.97 NAV88.

MANHOLE AND CATCH BASIN INVERT AND COORDINATE:

POINT ID.	INV.	NORTHING	EASTING
MH1	96.7±	2135646.932	5990574.385
CB2	14.5	2135759.275	5990730.916
CB3	10.5	2135747.975	5990754.780
CB4	7.5	2135662.963	5990735.976
CB5	50.0	CONTRACTOR TO LOCATE IN FIELD	
CB6	41.67	2135833.66	5990755.12
CB7	20.43	2135812.56	5990770.88
CB8		REMOVED FROM PROJECT	
CB9		REMOVED FROM PROJECT	
CB10	40.0	2135656.816	5990682.969

GENERAL YARD PIPING NOTES:

GYP1 ALL YARD PIPING SHALL BE AS IDENTIFIED ON YARD PIPING AND MECHANICAL DRAWINGS AND SPECIFICATION SECTION 02500 AND 15000 – PIPING GENERAL.

GYP2 LOCATIONS FOR LARGE YARD PIPE, 12–INCHES IN DIAMETER AND LARGER, ARE IDENTIFIED BY COORDINATES ON THE DRAWINGS.

GYP3 LOCATIONS FOR SMALL YARD PIPE, LESS THAN 12–INCHES IN DIAMETER, ARE APPROXIMATE AND CAN BE SCALED FROM THE DRAWINGS FOR APPROXIMATE LOCATION.

GYP4 ALL DRAINAGE OR GRAVITY FLOW PIPE SHALL MAINTAIN AN AVERAGE SLOPE BETWEEN ELEVATIONS INDICATED ON THE DRAWINGS. THE PIPE MAY BE DEFLECTED TO CLEAR AN INTERFERENCE. IN NO CASE SHALL THE PIPE SLOPE BE LESS THAN 0.0020 UNLESS NOTED OTHERWISE.

GYP5 ALL NEW PRESSURE (NON GRAVITY) PIPE SHALL BE INSTALLED WITH A SLOPE TO ALLOW FREE DRAINAGE TO BLOW–OFF VALVES OR STRUCTURES. ELEVATIONS ON THE DRAWINGS ARE MAXIMUM AND CAN BE LOWERED TO ACCOMMODATE INTERFERENCES, PROVIDED FREE DRAINAGE IS MAINTAINED.

GYP6 SLOPES OF PRESSURE PIPES BETWEEN STRUCTURES, WHEN NO INTERMEDIATE BLOW–OFFS ARE SHOWN, CAN BE ADJUSTED, PROVIDED ADEQUATE ADJUSTMENT EXISTS INSIDE STRUCTURES TO PROVIDE FREE DRAINAGE.

GYP7 ALL PIPES SHALL HAVE A MINIMUM COVER GREATER THAN 2'–6" UNLESS NOTED OTHERWISE.

GYP8 PIPES SHOWN AS CONCRETE ENCASED UNDER STRUCTURES SHALL BE CONCRETE ENCASED TO A MINIMUM HORIZONTAL DISTANCE BEYOND THE STRUCTURE AS SHOWN IN (C254).

GYP9 CONTRACTOR SHALL PROVIDE SUPPORT FOR ALL CROSSING UTILITIES EXPOSED DURING CONSTRUCTION.

GYP10 CONTRACTOR SHALL VERIFY THE TYPE, SIZE AND CONDITION OF EXISTING PIPE PRIOR TO INSTALLING NEW PIPE. THE PIPE SHALL BE INSPECTED FOR CORROSION OR OTHER CONDITIONS THAT WOULD PREVENT AN ADEQUATE CONNECTION.

GYP11 LOCATIONS OF EXISTING PIPES ARE APPROXIMATE. CONTRACTOR SHALL FIELD VERIFY CONNECTION LOCATIONS PRIOR TO STARTING WORK OR DETAILING SHOP DRAWINGS.

GYP12 UNLESS NOTED OTHERWISE ALL PIPES ENTERING OR LEAVING STRUCTURES EXCEPT AIR, GAS, AND SOLVENT WELDED PLASTIC PIPE SHALL BE PROVIDED WITH 2 FLEXIBLE COUPLINGS OR THREE TO FOUR FOOT SECTIONS OF BELL SPIGOT GASKETED PIPE AS SHOWN IN (C234).

GYP13 WHERE BURIED GAS LINES ARE INSTALLED, TWO CONTINUOUS WARNING TAPES SPACED 9–INCHES APART, CENTERED ALONG EACH PIPE, SHALL BE BURIED ONE FOOT BELOW FINISHED GRADE. WHERE GAS LINES CROSS ROADS, WARNING TAPES MAY BE PLACED ON THE SUBGRADE, BELOW ROAD BASE, IN LIEU OF ONE FOOT CRITERIA. IN ADDITION, WARNING SIGNS INDICATING BURIED GAS LINES SHALL BE PLACED ALONG THE PIPELINE ALIGNMENT, SPACED NO FARTHER APART THAN 250 FEET. WHERE GAS PIPELINES ARE BURIED UNDER A ROAD, WARNING SIGNS SHALL BE PLACED ALONG THE SHOULDER AND SHALL INDICATE BURIED GAS LINES UNDER ROAD.

GYP14 NEW ELECTRICAL MANHOLES SHOWN ON ELECTRICAL YARD DRAWINGS ARE SHOWN ON THE YARD PIPING DRAWINGS. THE YARD PIPING AND YARD ELECTRICAL UTILITIES SHALL BE COORDINATED AND SEQUENCED TO MINIMIZE INTERFERENCE DURING CONSTRUCTION. WHERE UTILITIES MUST CROSS UNDER EXISTING OR NEW CONCRETE DUCT BANKS, CONCRETE PIPE, OR OTHER RIGID UTILITIES, UTILITY SUPPORT DETAIL (C248) SHALL BE USED TO FACILITATE INSTALLATION.

GYP15 SOME OF THE SMALL EXISTING UTILITIES THAT ARE ADJACENT TO EACH OTHER ARE REPRESENTED AS A SINGLE LINE.

GYP16 CONTRACTOR SHALL INSTALL 4" OF CALIFORNIA CERTIFIED WEED FREE RICE STRAW. STRAW SHALL BE COVERED WITH 600 GR COIR FABRIC. COIR SHALL BE OVERLAPPED BY A MINIMUM 12" AT ALL SEAMS. FABRIC SHALL BE TOED IN TO THE TOP AND BOTTOM OF THE SLOPE AS PER GGNRA BMP HANDBOOK. FABRIC SHALL BE SECURELY STAKED USING A METAL U–STAKE OR WOODEN STAKE, DEPENDING ON FINISH SITE CONDITIONS. STAKES SHALL BE INSTALLED ALONG ALL SEAMS, AS WELL AS THROUGHOUT EROSION CONTROL INSTALLATION TO SECURE FABRIC FIRMLY AND ENSURE NO STRAW MOVEMENT.

STRUCTURE COORDINATE:

POINT ID.	NORTHING	EASTING
S1	2135783.386	5990756.646
S2	2135658.571	5990684.345
S3	2135735.428	5990699.480
S4	2135759.395	5990705.440
S5	2135807.063	5990772.577
S6	2135837.386	5990782.804
S7	2135837.385	5990799.616
S8	2135799.651	5990799.615
S9	2135793.449	5990783.350
S10	2135647.233	5990741.983
S11	2135802.959	5990710.042
S12	2135805.264	5990704.196
S13	2135744.346	5990680.002
S14	2135738.459	5990678.845
S15	2135646.563	5990681.998
S16	2135632.554	5990679.259
S17	2135565.610	5990790.417
S18	2135559.777	5990781.686

PIPING COORDINATE:

POINT ID.	NORTHING	EASTING	INVERT
P1	2135780.514	5990672.150	CONTRACTOR TO SPEC.
P2	2135779.804	5990675.758	CONTRACTOR TO SPEC.
P3	2135770.400	5990682.072	CONTRACTOR TO SPEC.
P4	2135740.178	5990685.624	CONTRACTOR TO SPEC.
P5	2135754.094	5990688.365	CONTRACTOR TO SPEC.
P6	2135764.018	5990690.316	CONTRACTOR TO SPEC.
P7	2135807.061	5990718.938	CONTRACTOR TO SPEC.
P8	2135820.387	5990732.204	CONTRACTOR TO SPEC.
P9	2135827.162	5990748.457	CONTRACTOR TO SPEC.
P10	2135827.199	5990764.848	CONTRACTOR TO SPEC.
P11	CONTRACTOR TO VERIFY		CONTRACTOR TO SPEC.
P12	CONTRACTOR TO VERIFY		CONTRACTOR TO SPEC.
P13	CONTRACTOR TO VERIFY		CONTRACTOR TO SPEC.
P14	2135778.528	5990805.371	CONTRACTOR TO SPEC.
P15	2135752.888	5990694.501	CONTRACTOR TO SPEC.
P16	2135769.924	5990697.846	CONTRACTOR TO SPEC.
P17	CONTRACTOR TO VERIFY		CONTRACTOR TO SPEC.
P18	CONTRACTOR TO VERIFY		CONTRACTOR TO SPEC.
P19	CONTRACTOR TO VERIFY		CONTRACTOR TO SPEC.
P20	2135773.282	5990804.123	CONTRACTOR TO SPEC.
P21	2135772.821	5990720.018	CONTRACTOR TO SPEC.
P22	2135757.618	5990722.716	CONTRACTOR TO SPEC.
P23	2135753.222	5990745.080	CONTRACTOR TO SPEC.
P20	2135669.372	5990728.594	CONTRACTOR TO SPEC.
P25	2135660.949	5990771.431	CONTRACTOR TO SPEC.
P26	2135610.981	5990788.445	CONTRACTOR TO SPEC.

ROAD COORDINATE:

POINT ID.	NORTHING	EASTING
R1	2135644.049	5990673.337
R2	2135758.872	5990695.911
R3	2135768.539	5990700.069
R4	2135805.122	5990726.090
R5	2135796.608	5990791.740
R6	2135498.909	5990658.153
R7	2135495.698	5990643.481
R8	2135459.107	5990667.425
R9	2135464.688	5990678.118
R10	2135412.873	5990705.156
R11	2135419.225	5990717.329
R12	2135297.158	5990648.387
R13	2135291.573	5990635.148
R14	2135244.485	5990654.536
R15	2135249.623	5990667.213
R16	2135337.093	5990687.940
R17	2135341.601	5990701.918
R18	2135321.191	5990719.822
R19	2135334.880	5990733.615

TRAFFIC GUARDRAIL COORDINATE:

POINT ID.	NORTHING	EASTING
CX1	2135734.167	5990698.197
CX2	2135757.340	5990703.763
CX3	2135765.089	5990707.432
CX4	2135800.485	5990732.609
CX5	2135812.324	5990762.377
CX6	2135810.557	5990768.133

NOTE: PER RESPONSE TO RFI–114.1, THE CX POINTS PROVIDED ARE FOR REFERENCE. THE CONTRACTOR SHALL CONFIRM ALL POINTS PROVIDED AGAINST ACTUAL FIELD CONDITIONS TO MATCH THE GUARDRAIL WITH THE WALL GEOMETRY.

RECORD DRAWING
THIS RECORD DRAWING HAS BEEN PREPARED FROM THE ORIGINAL CONTRACT DOCUMENTS SIGNED AND SEALED BY THE RESPONSIBLE ENGINEER OF RECORD. ADDITIONAL INFORMATION HAS BEEN PROVIDED BY OTHERS TO REPRESENT AS–CONSTRUCTED CONDITION AND IS SHOWN ON THESE RECORD DRAWINGS. THE RESPONSIBLE ENGINEER OF RECORD CANNOT VERIFY THE ACCURACY OF THE AS–CONSTRUCTED CONDITION INFORMATION REPRESENTED ON THE RECORD DRAWINGS.

0" 1" — VERIFY SCALES — BAR IS ONE INCH LONG ON FULL SIZE DRAWING. IF NOT ONE INCH LONG ON THIS DRAWING, ADJUST SCALES ACCORDINGLY

Woodard & Curran

REV	DATE	BY	APVD	DESCRIPTION
1	07/22	CT	TV	RECORD DRAWING

DESIGNED M. TAKEMOTO
DRAWN C. TO
CHECKED M. NAKAMOTO

SUBMITTED: MARK TAKEMOTO, RMC PROJECT ENGINEER CE-64369
APPROVED: STEVE CLARY, RMC ENGINEER CE-30318

SAUSALITO • MARIN CITY SANITARY DISTRICT

TREATMENT AND WET WEATHER FLOW UPGRADE

CIVIL LEGEND AND NOTES

DWG NO C-1
SHEET NO 29 OF 226
PROJ NO 055-006
DATE JULY 2022

FILENAME: 055-006-C-1 8-01-22 12:10pm cto || XREFS: X-SMCSD-TBLK |<<--

Last Saved By: cto 8-01-22 10:09am

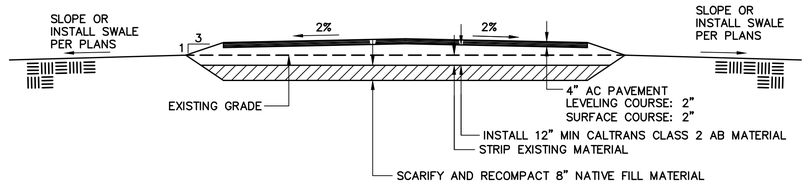

TYPICAL ROAD SECTION – CROWNED – NO CURBS (C102)

NTS

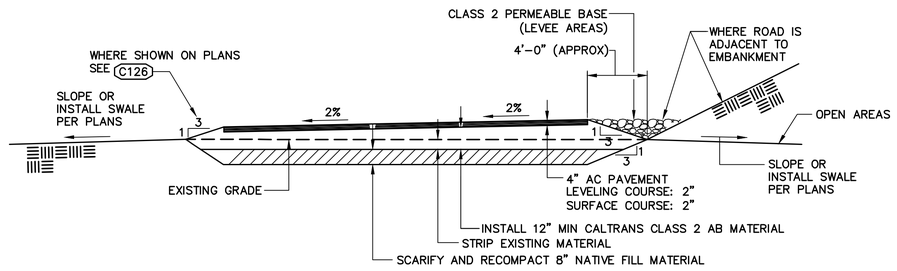

TYPICAL ROAD SECTION – UNIFORM SLOPE – NO CURBS (C103)

NTS

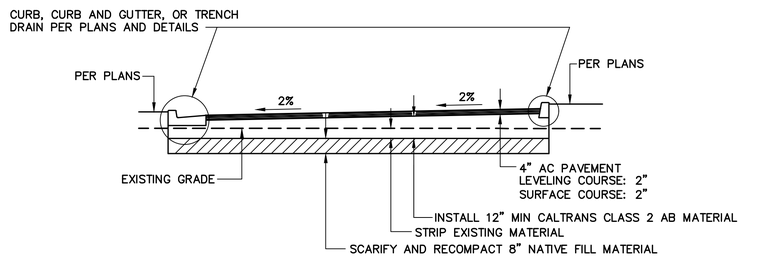

TYPICAL ROAD SECTION – UNIFORM SLOPE – CURBED (C104)

NTS

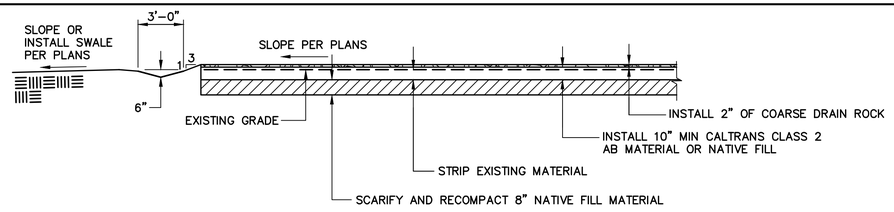

NOTES:

1. FOR CONSTRUCTION STAGING, INSTALL FIRST 8" OF CLASS 2 AB OR NATIVE FILL TOPPED WITH 2" GRAVEL. AFTER CONSTRUCTION TRAILERS, EQUIPMENT AND MATERIALS ARE DEMOBILIZED FROM THIS AREA, REPAIR ALL DAMAGE, THEN SCARIFY AND RECOMPACT TOP 4" OF MATERIAL, AND TOP WITH 2" OF ADDITIONAL COARSE DRAIN ROCK. SLOPE PER PLANS.

STAGING AREA (C105)

NTS

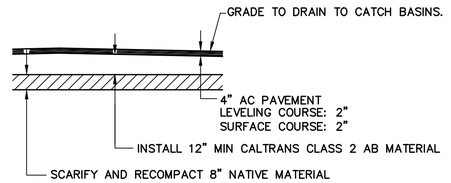

NOTES:

1. EXISTING GRADES SHALL BE CUT OR FILLED AS REQUIRED.
2. EXISTING PAVED AREAS SHALL BE SAW CUT AND PAVEMENT AND UNSUITABLE MATERIAL SHALL BE REMOVED.

TYPICAL PAVED AREA (C107)

NTS

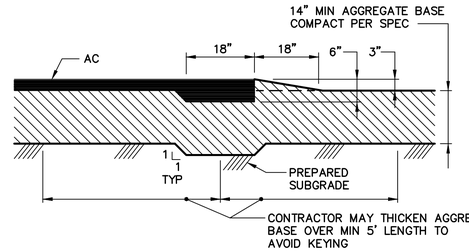

ELEVATION

AC ROAD/GRAVEL ROAD TRANSITION (C108)

NTS

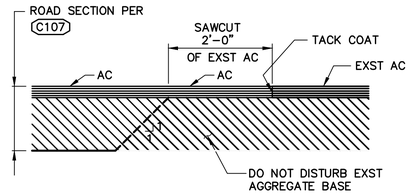

ELEVATION

NEW/ EXST AC ROAD TRANSITION (C109)

NTS

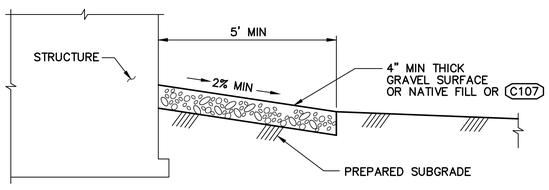

ELEVATION

NOTES:

1. SUBGRADE BENEATH GRAVEL SHALL BE SLOPED SAME AS SURFACE.

TYPICAL GRADING AT STRUCTURES (C110)

NTS

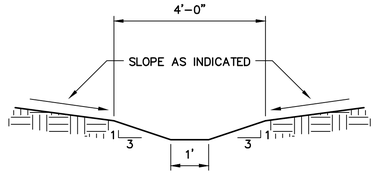

TYPICAL SWALE SECTION

TYPICAL SWALE ELEVATIONS (C114)

NTS

TYPICAL GRAVEL ROAD SECTION (C106)

NTS

RECORD DRAWING
THIS RECORD DRAWING HAS BEEN PREPARED FROM THE ORIGINAL CONTRACT DOCUMENTS SIGNED AND SEALED BY THE RESPONSIBLE ENGINEER OF RECORD. ADDITIONAL INFORMATION HAS BEEN PROVIDED BY OTHERS TO REPRESENT AS-CONSTRUCTED CONDITION AND IS SHOWN ON THESE RECORD DRAWINGS. THE RESPONSIBLE ENGINEER OF RECORD CANNOT VERIFY THE ACCURACY OF THE AS-CONSTRUCTED CONDITION INFORMATION REPRESENTED ON THE RECORD DRAWINGS.

0" 1" — VERIFY SCALES — BAR IS ONE INCH LONG ON FULL SIZE DRAWING. IF NOT ONE INCH LONG ON THIS DRAWING, ADJUST SCALES ACCORDINGLY

Woodard & Curran

REV	DATE	BY	APVD	DESCRIPTION
1	07/22	CT	TV	RECORD DRAWING

DESIGNED M. TAKEMOTO
DRAWN C. TO
CHECKED M. NAKAMOTO

SUBMITTED: MARK TAKEMOTO, RMC PROJECT ENGINEER CE-64369
APPROVED: STEVE CLARY, RMC ENGINEER CE-30318

SAUSALITO · MARIN CITY SANITARY DISTRICT

TREATMENT AND WET WEATHER FLOW UPGRADE

CIVIL STANDARD DETAILS - 1

DWG NO	C-2
SHEET NO	30 OF 226
PROJ NO	055-006
DATE	JULY 2022

FILENAME: 055-006-C-2 8-01-22 12:10pm cto || XREFS: X-SMCSD-TBLK |<<--

Last Saved By: cto 8-01-22 10:09am

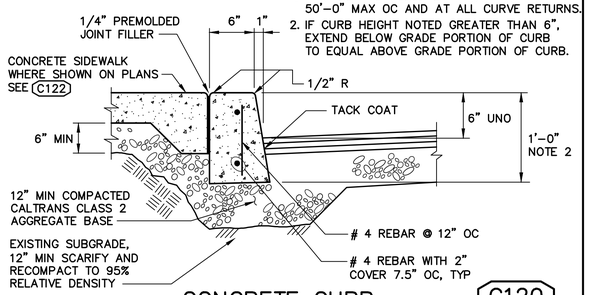

CONCRETE CURB C120

NTS

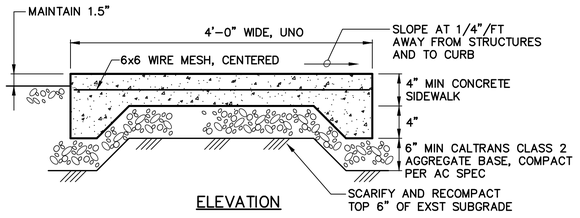

ELEVATION

NOTES:

1. PROVIDE CONTROL JOINTS AT 4' MAX CENTERS.
2. PROVIDE PREMOLDED EXPANSION JOINTS AT 20'-0" MAX ON OC AND AT ALL CORNERS.

SIDEWALK C122

NTS

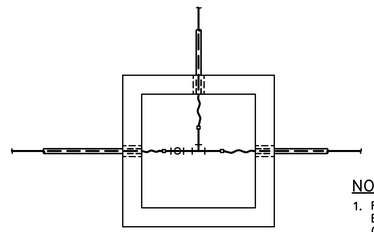

PLAN

NOTES:

1. FOR ORIENTATION OF BOX AND PIPING SEE CIVIL DRAWINGS.

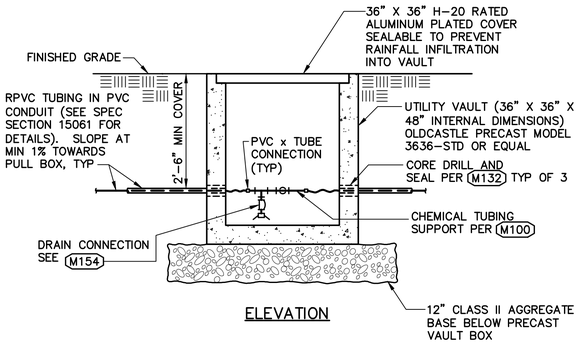

ELEVATION

CHEMICAL TUBING PULL BOX C128

NTS

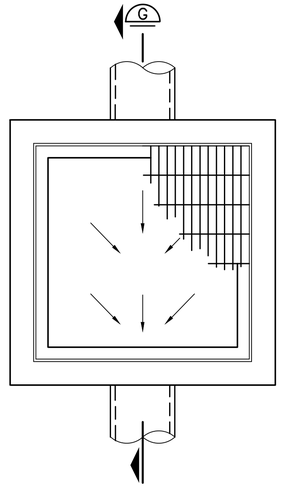

PLAN

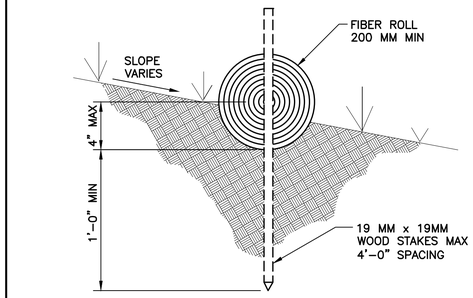

ENTRENCHMENT DETAIL

N.T.S.

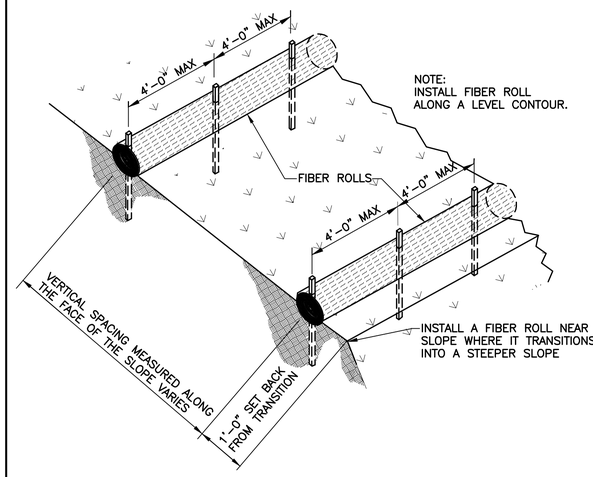

TYPICAL FIBER ROLL INSTALLATION

N.T.S.

TYPICAL FIBER ROLL INSTALLATION C183

NTS

NOTE:
PROVIDE PREMOLDED EXPANSION JOINTS AT 50'-0" MAX OC AND AT ALL CORNERS.

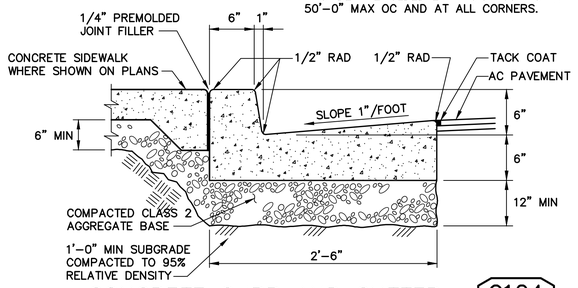

CONCRETE CURB AND GUTTER C124

NTS

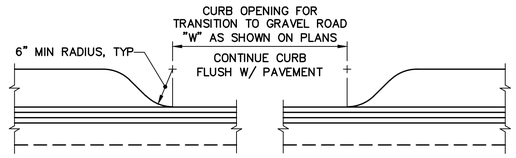

CONCRETE CURB OPENING C143

NTS

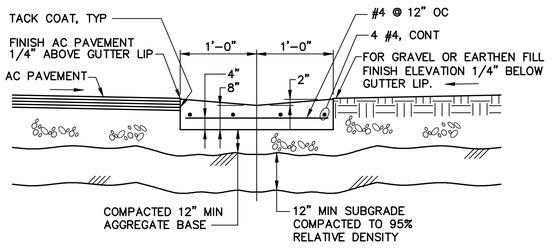

CONCRETE VALLEY GUTTER C126

NTS

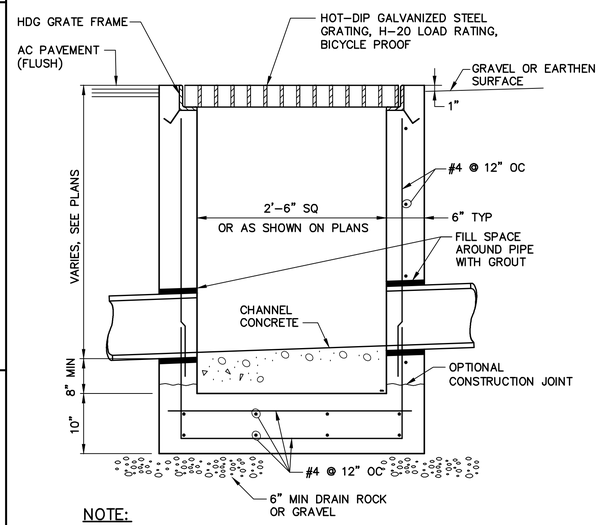

NOTE:

1. PRECAST CATCH BASIN IS ACCEPTABLE ALTERNATIVE WITH ENGINEER APPROVAL. DIMENSION MAY BE MODIFIED FOR STANDARD PRECAST PRODUCTS.
2. PRECAST CATCH BASIN SHALL BE H-20 LOAD.

SECTION G

NTS

TYPICAL CATCH BASIN C182

NTS

FILENAME: 055-006-C-2 8-01-22 12:10pm cto || XREFS: X-SMCSD-TBLK <<--

Last Saved By: cto 8-01-22 10:09am

RECORD DRAWING

THIS RECORD DRAWING HAS BEEN PREPARED FROM THE ORIGINAL CONTRACT DOCUMENTS SIGNED AND SEALED BY THE RESPONSIBLE ENGINEER OF RECORD. ADDITIONAL INFORMATION HAS BEEN PROVIDED BY OTHERS TO REPRESENT AS-CONSTRUCTED CONDITION AND IS SHOWN ON THESE RECORD DRAWINGS. THE RESPONSIBLE ENGINEER OF RECORD CANNOT VERIFY THE ACCURACY OF THE AS-CONSTRUCTED CONDITION INFORMATION REPRESENTED ON THE RECORD DRAWINGS.

0" — 1" VERIFY SCALES — BAR IS ONE INCH LONG ON FULL SIZE DRAWING. IF NOT ONE INCH LONG ON THIS DRAWING, ADJUST SCALES ACCORDINGLY

Woodard & Curran

REV	DATE	BY	APVD	DESCRIPTION
1	07/22	CT	TV	RECORD DRAWING

DESIGNED M. TAKEMOTO
DRAWN C. TO
CHECKED M. NAKAMOTO

SUBMITTED: MARK TAKEMOTO
RMC PROJECT ENGINEER CE-64369

APPROVED: STEVE CLARY
RMC ENGINEER CE-30318

SAUSALITO · MARIN CITY SANITARY DISTRICT

TREATMENT AND WET WEATHER FLOW UPGRADE

CIVIL STANDARD DETAILS - 2

DWG NO C-3
SHEET NO 31 OF 226
PROJ NO 055-006
DATE JULY 2022

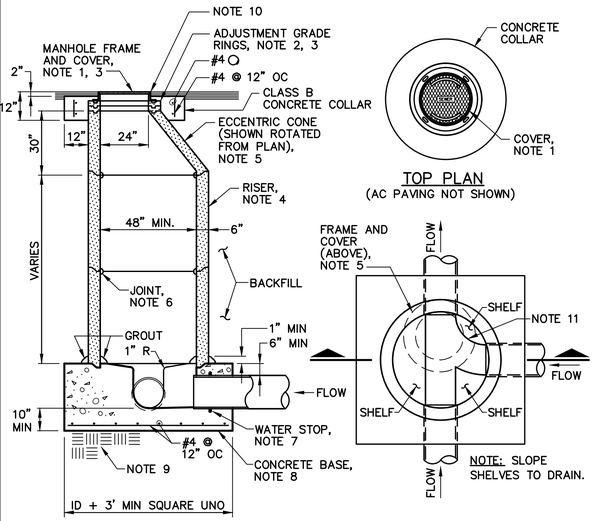

SECTION

TOP PLAN
(AC PAVING NOT SHOWN)

LOWER PLAN

NOTES:

1. MANHOLE FRAME AND COVER SHALL HAVE 30" MIN CLEAR OPENING AND SEALED BLIND PICK HOLE. COVER SHALL BE LABELED "SEWER" AND SHALL BE RATTLE FREE WITHOUT USE OF SEALANT.
2. TOP OF CONE TO TOP OF FRAME SHALL NOT EXCEED 15". ADJUSTMENT GRADE RINGS SHALL BE 3" OR 6" DEEP.
3. GRADE RINGS AND MANHOLE FRAME SHALL BE SEALED AT EACH JOINT WITH BUTYL RUBBER (CONSEAL CS-102 OR EQUAL) AND GROUTED ON THE INSIDE.
4. UNLESS OTHERWISE NOTED, MANHOLE RISERS SHALL BE 48" MIN. INSIDE DIAMETER, PRECAST CONCRETE CONFORMING TO ASTM C478-94 FOR PRECAST REINFORCED MANHOLE SECTIONS.
5. ECCENTRIC CONE SHALL BE PRECAST CONCRETE CONFORMING TO ASTM C478-94 FOR PRECAST REINFORCED MANHOLE SECTIONS. STRAIGHT SIDE OF CONE SHALL BE POSITIONED OVER MANHOLE OUTLET. CONCENTRIC CONES MAY ONLY BE USED IN SPECIAL CASES WITH WRITTEN CONSENT OF ENGINEER.
6. JOINTS SHALL BE SET WITH PREFORMED MASTIC SEALANT (HENRY COMPANY RAM-NEK, KENT SEAL, OR EQUAL). INSIDE OF JOINTS SHALL BE GROUTED WITH NON-SHRINK GROUT.
7. PROVIDE WATER STOPS FOR ENCASED PIPE.
8. CONCRETE POUR SHALL NOT FALL OVER 6 FEET UNLESS AN "ELEPHANT'S TRUNK" OR AN "ADJUSTABLE PIPE" IS USED. CONCRETE WORK IN FLOW CHANNEL SHALL BE STEEL TROWEL FINISHED. SHELVES SHALL BE BROOM FINISHED. BASE SHALL BE MONOLITHICALLY PLACED. A STEEL IMPRESSION RING SHALL BE USED TO FORM GROOVE FOR FIRST RISER SECTION.
9. WHEN IN GROUNDWATER, PROVIDE 6" DEEP CRUSHED ROCK WRAPPED IN GEOTEXTILE BENEATH MANHOLE BASE. OTHERWISE, SCARIFY AND RECOMPACT NATIVE MATERIAL TO 90%.
10. PROVIDE 1/4" LIP AT NEW PAVEMENT AND NO LIP FOR EXISTING PAVEMENT.
11. ALL DIRECTION CHANGES TO BE SMOOTH WIDE SWEEPS.

STANDARD SEWER MANHOLE C200

NTS

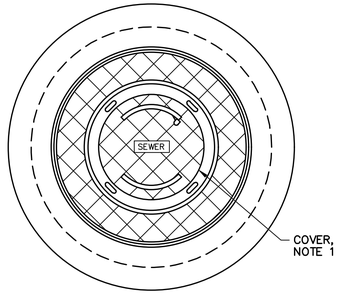

TOP PLAN
(AC PAVING NOT SHOWN)

ELEVATION

NOTES:

MANHOLE FRAME AND COVER SHALL HAVE 48" MIN CLEAR OPENING AND SEALED BLIND PICK HOLE. COVER SHALL BE LABELED "SEWER" AND SHALL BE RATTLE FREE WITHOUT USE OF SEALANT.

PRECAST MANHOLE SLAB TOP C201

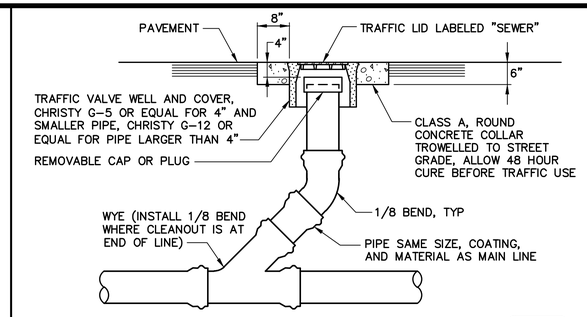

TRAFFIC AREA CLEANOUT C214

NTS

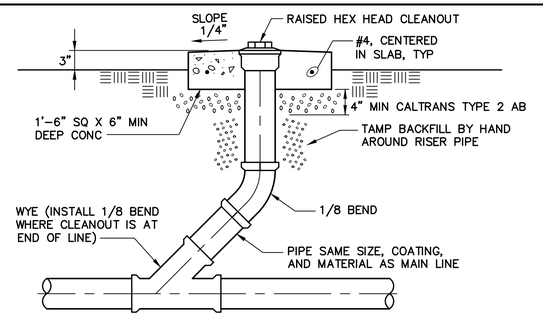

NON-TRAFFIC AREA CLEANOUT C216

NTS

SECTION

NOTES:

1. MANHOLE BASE SHALL BE PLACED ON A MINIMUM 6" CLEAN SAND OR GRAVEL OVER NATIVE MATERIAL THAT IS UNDISTURBED OR COMPACTED TO 95%.
2. SEE DETAIL C200 FOR DETAILS AND NOTES OF CONSTRUCTION ABOVE PRECAST BASE.

PRECAST SEWER MANHOLE BASE C202

NTS

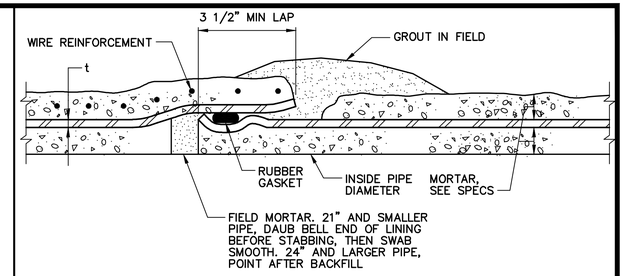

BELL AND SPIGOT RUBBER GASKET JOINT

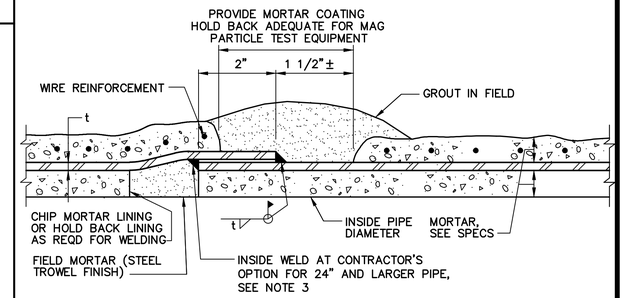

LAP WELDED SLIP JOINT

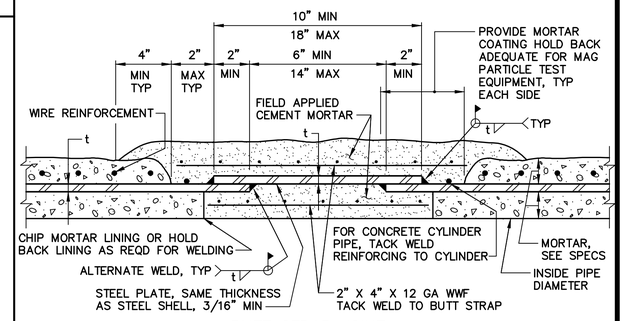

BUTT STRAP JOINT

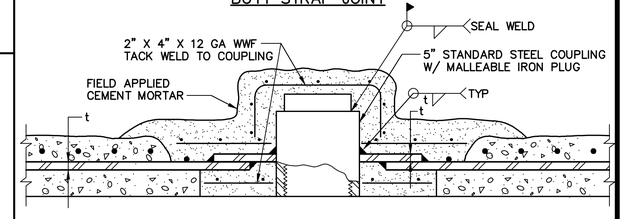

TYPICAL HANDHOLE FOR BUTT STRAP JOINT

NOTES:

1. HANDHOLE REQUIRED ON PIPE SMALLER THAN 24" DIAMETER.
2. PROVIDE ADEQUATE HOLDBACK OF CEMENT MORTAR LINING AND COATING FOR WELDING AND TESTING OF WELDS.
3. WHERE DOUBLE LAP WELD IS SHOWN ON THE DRAWINGS, WELD INSIDE AND OUTSIDE.
4. FIELD WELDS SHALL NOT BE MORTARED UNTIL APPROVED BY OWNER

MORTAR LINED & COATED STEEL PIPE C220

NTS

RECORD DRAWING
THIS RECORD DRAWING HAS BEEN PREPARED FROM THE ORIGINAL CONTRACT DOCUMENTS SIGNED AND SEALED BY THE RESPONSIBLE ENGINEER OF RECORD. ADDITIONAL INFORMATION HAS BEEN PROVIDED BY OTHERS TO REPRESENT AS-CONSTRUCTED CONDITION AND IS SHOWN ON THESE RECORD DRAWINGS. THE RESPONSIBLE ENGINEER OF RECORD CANNOT VERIFY THE ACCURACY OF THE AS-CONSTRUCTED CONDITION INFORMATION REPRESENTED ON THE RECORD DRAWINGS.

0" — 1" — VERIFY SCALES — BAR IS ONE INCH LONG ON FULL SIZE DRAWING. IF NOT ONE INCH LONG ON THIS DRAWING, ADJUST SCALES ACCORDINGLY

Woodard & Curran

REV	DATE	BY	APVD	DESCRIPTION
1	07/22	CT	TV	RECORD DRAWING

DESIGNED M. TAKEMOTO
DRAWN C. TO
CHECKED M. NAKAMOTO

SUBMITTED: MARK TAKEMOTO, RMC PROJECT ENGINEER CE-64369
APPROVED: STEVE CLARY, RMC ENGINEER CE-30318

SAUSALITO · MARIN CITY SANITARY DISTRICT

TREATMENT AND WET WEATHER FLOW UPGRADE

CIVIL STANDARD DETAILS - 3

DWG NO	C-4
SHEET NO	32 OF 226
PROJ NO	055-006
DATE	JULY 2022

FILENAME: 055-006-C-2 8-01-22 12:10pm cto || XREFS: | X-SMCSD-TBLK |<<--

Last Saved By: cto 8-01-22 10:09am

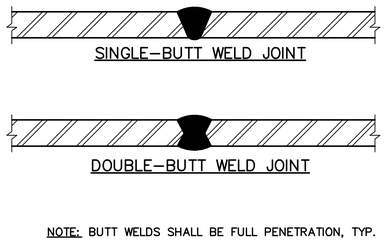

NOTE: BUTT WELDS SHALL BE FULL PENETRATION, TYP.

WELDED STEEL PIPE BUTT WELDS (C222)
NTS

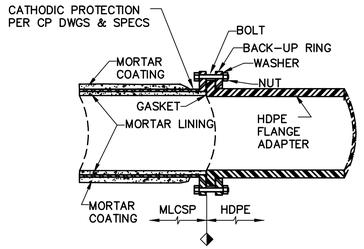

NOTES:
1. CONTRACTOR SHALL ENSURE FLANGE BOLT HOLE PATTERN FOR HDPE AND MLCSP MATCH UP.
2. SEE HDPE SPEC FOR MORE INFORMATION.

STEEL PIPE TO HDPE TRANSITION (C231)
NTS

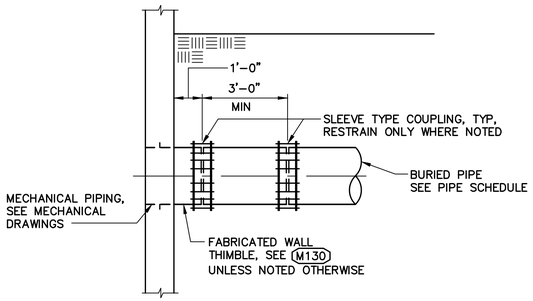

WELDED OR FUSED PIPE

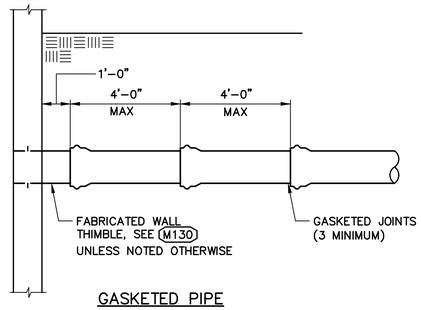

GASKETED PIPE

BURIED PIPE AT STRUCTURE (C234)
NTS

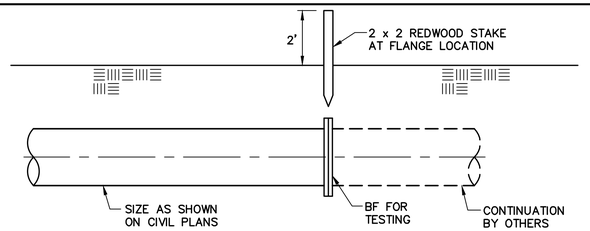

NOTES:
1. CONTRACTOR SHALL PROVIDE SUFFICIENT TEMPORARY THRUST RESTRAINT FOR TESTING.

TYPICAL PIPE END OF CONTRACT DETAIL (C238)
NTS

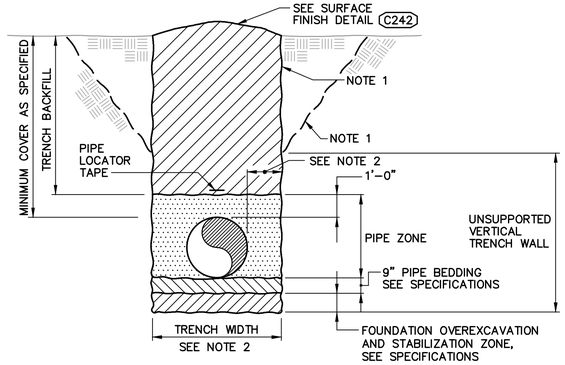

NOTES:
1. ALTERNATE TRENCH SECTIONS SHOWN ARE FOR USE WHERE COMPACT, STABLE SOIL CONDITIONS EXIST. WHERE LARGE ROCKS OR STRUCTURES ARE ENCOUNTERED, TRENCH SECTIONS MAY BE DEEPER AND WIDER THAN THOSE SHOWN. COMBINATION OF SLOPING AND VERTICAL TRENCH WALLS:
   a. TRENCH DEPTHS NOT EXCEEDING 5'–0" SHALL HAVE VERTICAL WALLS IN PIPE ZONE UNLESS NOTED OTHERWISE.
   b. FOR TRENCH DEPTHS EXCEEDING 5'–0" SEE SPECIFICATION 2200.
2. TRENCH WIDTH SHALL BE A MINIMUM OF THE PIPE OD PLUS 24". THE MAXIMUM SHALL BE THE PIPE OD PLUS 36".
3. WHERE WET AND UNSTABLE SOIL IS ENCOUNTERED, SOLID SHEATHING IS REQUIRED FOR ALL VERTICAL TRENCH WALLS.
4. SEE SPECIFICATION 02200 FOR BACKFILL REQUIREMENTS.

PIPE TRENCH SECTION (C240)
NTS

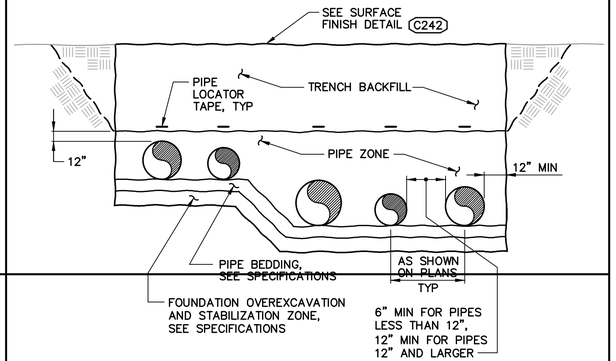

NOTES:
1. PIPES LOCATED WITHIN MULTIPLE PIPE TRENCHES SHALL BE DESIGNED FOR POSITIVE PROJECTING EMBANKMENT CONDITION. SEE SPECS.
2. DESIGN OF PIPE SHALL BE CARRIED OUT FOR EACH INSTANCE OF MULTIPLE PIPE TRENCHES, ACCOUNTING FOR THE GEOMETRY OF THE PIPE TRENCH.

MULTIPLE PIPE TRENCH SECTION (C244)
NTS

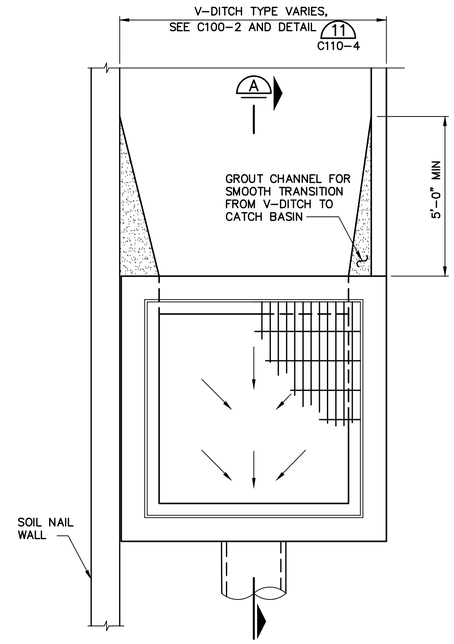

PLAN

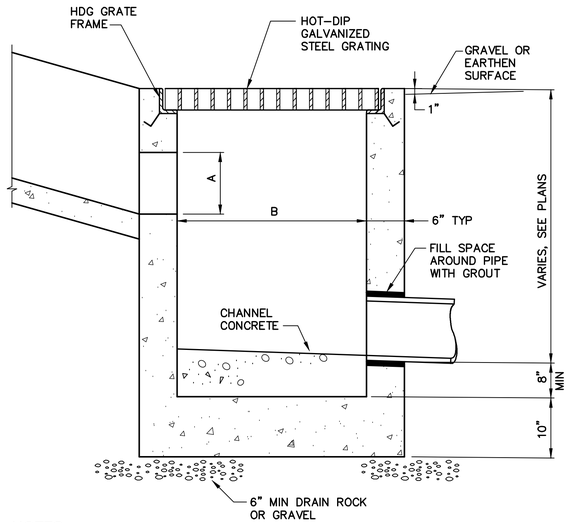

NOTES:
1. PRECAST SIDE INLET CATCH BASINS SHALL BE PROVIDED IN ACCORDIANCE WITH SECTION 02540.

V–DITCH TYPE	A	B
TYPE A	12"	24" SQUARE
TYPE B	24"	48" SQUARE

SECTION A
NTS

TYPICAL PRECAST SIDE INLET CATCH BASIN (C185)
NTS

FILENAME: 0055-006-C-2 8-01-22 12:11pm cto | XREFS: | X-SMCSD-TBLK |<c--

RECORD DRAWING
THIS RECORD DRAWING HAS BEEN PREPARED FROM THE ORIGINAL CONTRACT DOCUMENTS SIGNED AND SEALED BY THE RESPONSIBLE ENGINEER OF RECORD. ADDITIONAL INFORMATION HAS BEEN PROVIDED BY OTHERS TO REPRESENT AS-CONSTRUCTED CONDITION AND IS SHOWN ON THESE RECORD DRAWINGS. THE RESPONSIBLE ENGINEER OF RECORD CANNOT VERIFY THE ACCURACY OF THE AS-CONSTRUCTED CONDITION INFORMATION REPRESENTED ON THE RECORD DRAWINGS.

0" — 1" — VERIFY SCALES — BAR IS ONE INCH LONG ON FULL SIZE DRAWING. IF NOT ONE INCH LONG ON THIS DRAWING, ADJUST SCALES ACCORDINGLY

Woodard & Curran

REV	DATE	BY	APVD	DESCRIPTION
1	07/22	CT	TV	RECORD DRAWING

DESIGNED M. TAKEMOTO
DRAWN C. TO
CHECKED M. NAKAMOTO

SUBMITTED: MARK TAKEMOTO, RMC PROJECT ENGINEER CE-64369
APPROVED: STEVE CLARY, RMC ENGINEER CE-30318

SAUSALITO · MARIN CITY SANITARY DISTRICT

TREATMENT AND WET WEATHER FLOW UPGRADE

CIVIL STANDARD DETAILS - 4

DWG NO C-5
SHEET NO 33 OF 226
PROJ NO 055-006
DATE JULY 2022

Last Saved By: cto 8-01-22 10:09am

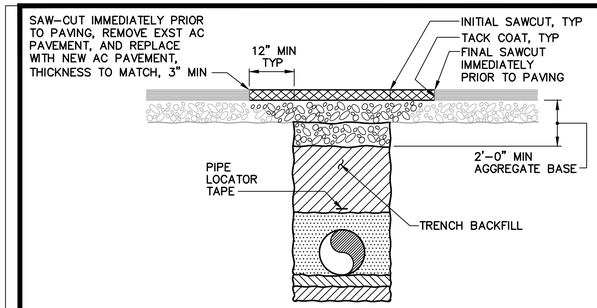

EXISTING AC PAVEMENT

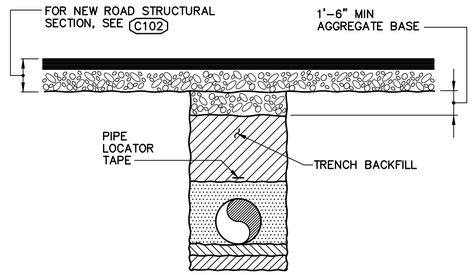

NEW AC PAVEMENT

NOTES:

1. VERTICAL WALL TRENCH IS SHOWN. COMBINED SLOPING AND VERTICAL WALL TRENCH IS SIMILAR. ADJUST SURFACE WIDTHS AND SAW-CUT LINES FROM EDGE OF SLOPING WALLS.
2. SEE SPECIFICATIONS FOR BACKFILL MATERIAL AND COMPACTION REQUIREMENTS.
3. PIPE LOCATOR TAPE OR TRACING WIRE SHALL BE BROUGHT TO SURFACE AT STRUCTURE CONNECTIONS. PRECAST CONCRETE HANDHOLE SHALL BE PROVIDED TO TERMINATE LOCATOR TAPE OR TRACING WIRE.

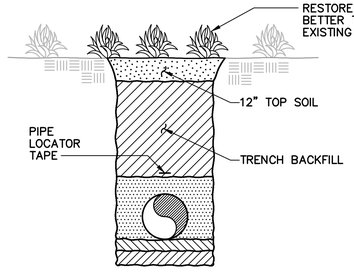

LANDSCAPED AREAS

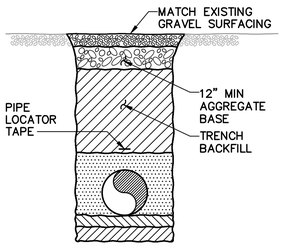

GRAVELLED AREAS

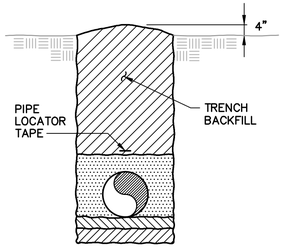

UNSURFACED AREAS

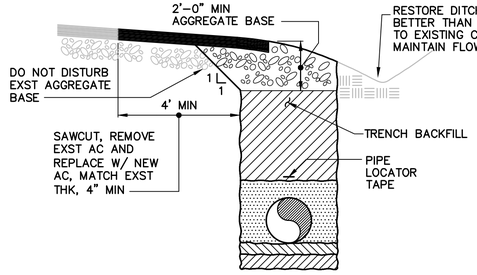

EXISTING ADJACENT ROADWAY

TRENCH SURFACE FINISH C242

NTS

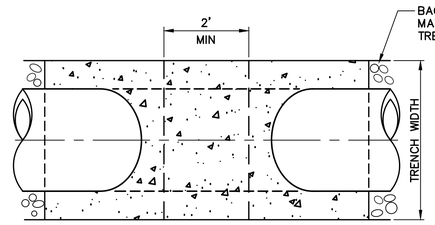

PLAN

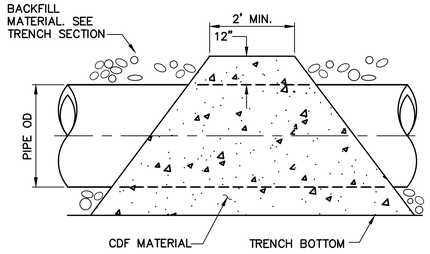

SECTION

TRENCH PLUG C246

NTS

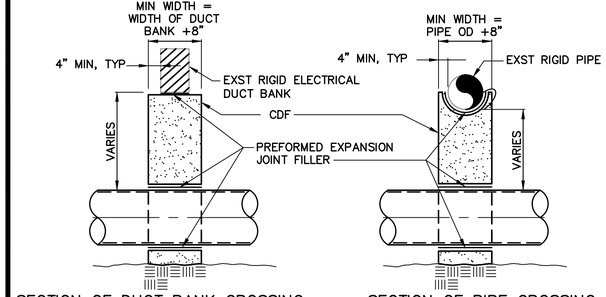

SECTION OF DUCT BANK CROSSING

SECTION OF PIPE CROSSING

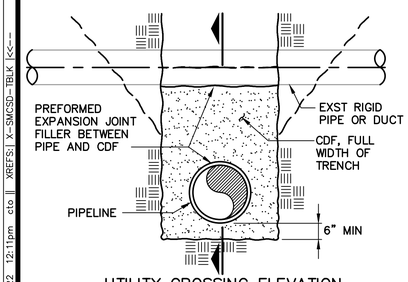

UTILITY CROSSING ELEVATION

NOTES:

1. SUBMIT SHOP DRAWING ON EXPANSION JOINT FILLER MATERIAL.
2. BACKFILL TO BE BROUGHT UP UNIFORMLY ON BOTH SIDES OF UTILITY SUPPORT.
3. EXISTING PIPE OR DUCT SHALL BE FIRMLY SUPPORTED DURING INSTALLATION OF NEW PIPE AND UTILITY SUPPORT.
4. FORM THE SIDES OF UTILITY SUPPORT WHICH CROSS TRENCH.
5. RIGID PIPE SHALL BE DEFINED AS CONCRETE PIPE OR OTHER RIGID MATERIAL.

UNDERGROUND UTILITY SUPPORT DETAILS C248

NTS

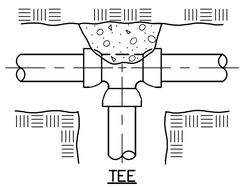

TEE

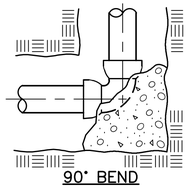

90° BEND

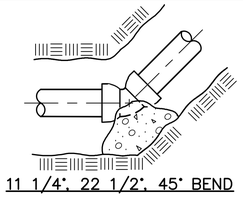

11 1/4°, 22 1/2°, 45° BEND

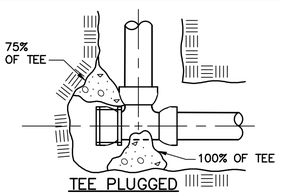

TEE PLUGGED

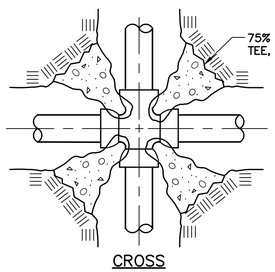

CROSS

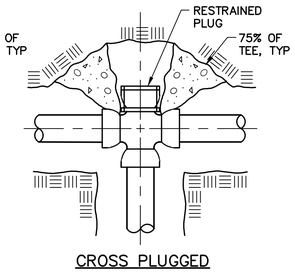

CROSS PLUGGED

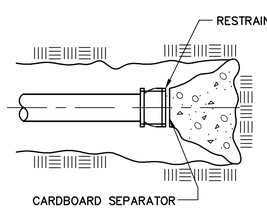

DEAD END

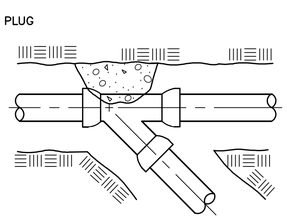

LATERAL

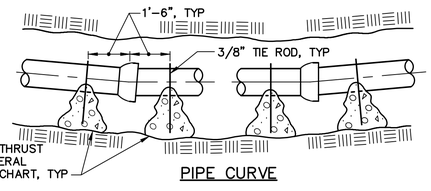

PIPE CURVE

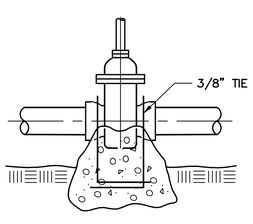

VALVE (ELEVATION)

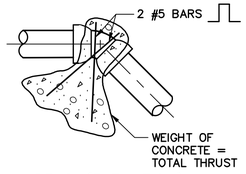

BEND (ELEVATION)

THRUST PER PSI OF HYDROTEST PRESSURE						
PIPE SIZE	90° ELBOW	45° ELBOW	22 1/2° ELBOW	11 1/4° ELBOW	TEE OR DEAD END	LATERAL
4"	28	16	8	6	20	16
6"	56	30	16	10	40	30
8"	96	52	26	14	68	52
10"	154	84	44	22	110	84
12"	220	120	62	32	156	120
14"	298	162	82	42	210	162
16"	384	210	106	54	272	210
18	494	270	138	70	352	270
20	612	334	170	86	434	334
24	878	478	244	122	624	478

EXAMPLE:
12" 45° ELBOW AT 150 PSIG TEST PRESSURE
150 (PSIG) X 120 (FROM CHART) = 18,000 POUNDS
SEE SOILS REPORT FOR SOIL BEARING STRENGTH
(2000 PSF USED FOR EXAMPLE)
18,000\2000 = 9 SQ FT THRUST BLOCK BEARING AREA REQUIRED

LATERAL THRUST PER PSI PER DEGREE OF DEFLECTION			
PIPE SIZE		PIPE SIZE	
4"	.36	14"	3.80
6"	.72	16"	4.86
8"	1.22	18	6.68
10"	1.98	20	7.92
12"	2.78	24	11.50

NOTES:

1. THRUST BLOCKS NOT REQUIRED FOR SOLVENT WELDED PVC PIPE OR PIPE WITH RESTRAINED JOINT TYPE FITTINGS.
2. POUR THRUST BLOCKS AGAINST UNDISTURBED EARTH. LOOSE OR OTHERWISE DISTURBED EARTH IS UNACCEPTABLE FOR THRUST BLOCK FOUNDATION.
3. USE CLASS A CONCRETE FOR THRUST BLOCKS.
4. THRUST BLOCK FOUNDATION SOILS SHALL HAVE A MINIMUM UNCONFINED COMPRESSIVE STRENGTH OF 1,200 PSF AS MEASURED BY ENGINEER WITH POCKET PENETROMETER, OR EQUAL.

CONCRETE THRUST BLOCKS C250

RECORD DRAWING
THIS RECORD DRAWING HAS BEEN PREPARED FROM THE ORIGINAL CONTRACT DOCUMENTS SIGNED AND SEALED BY THE RESPONSIBLE ENGINEER OF RECORD. ADDITIONAL INFORMATION HAS BEEN PROVIDED BY OTHERS TO REPRESENT AS-CONSTRUCTED CONDITION AND IS SHOWN ON THESE RECORD DRAWINGS. THE RESPONSIBLE ENGINEER OF RECORD CANNOT VERIFY THE ACCURACY OF THE AS-CONSTRUCTED CONDITION INFORMATION REPRESENTED ON THE RECORD DRAWINGS.

0" 1" — VERIFY SCALES — BAR IS ONE INCH LONG ON FULL SIZE DRAWING. IF NOT ONE INCH LONG ON THIS DRAWING, ADJUST SCALES ACCORDINGLY

Woodard & Curran

REV	DATE	BY	APVD	DESCRIPTION
1	07/22	CT	TV	RECORD DRAWING

DESIGNED M. TAKEMOTO
DRAWN C. TO
CHECKED M. NAKAMOTO

SUBMITTED: MARK TAKEMOTO, RMC PROJECT ENGINEER CE-64369
APPROVED: STEVE CLARY, RMC ENGINEER CE-30318

SAUSALITO · MARIN CITY SANITARY DISTRICT

TREATMENT AND WET WEATHER FLOW UPGRADE

CIVIL STANDARD DETAILS - 5

DWG NO C-6
SHEET NO 34 OF 226
PROJ NO 055-006
DATE JULY 2022

FILENAME: 055-006-C-2 8-01-22 12:11pm cto || XREFs: || X-SMCSD-TBLK ><--

Last Saved By: cto 8-01-22 10:09am

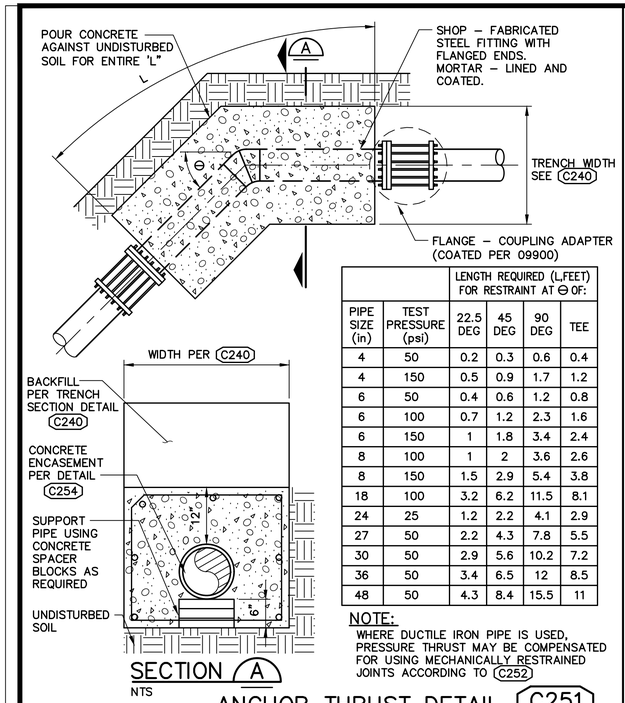

		LENGTH REQUIRED (L,FEET) FOR RESTRAINT AT ⊖ OF:			
PIPE SIZE (in)	TEST PRESSURE (psi)	22.5 DEG	45 DEG	90 DEG	TEE
4	50	0.2	0.3	0.6	0.4
4	150	0.5	0.9	1.7	1.2
6	50	0.4	0.6	1.2	0.8
6	100	0.7	1.2	2.3	1.6
6	150	1	1.8	3.4	2.4
8	100	1	2	3.6	2.6
8	150	1.5	2.9	5.4	3.8
18	100	3.2	6.2	11.5	8.1
24	25	1.2	2.2	4.1	2.9
27	50	2.2	4.3	7.8	5.5
30	50	2.9	5.6	10.2	7.2
36	50	3.4	6.5	12	8.5
48	50	4.3	8.4	15.5	11

NOTE:
WHERE DUCTILE IRON PIPE IS USED, PRESSURE THRUST MAY BE COMPENSATED FOR USING MECHANICALLY RESTRAINED JOINTS ACCORDING TO C252

ANCHOR THRUST DETAIL C251
NTS

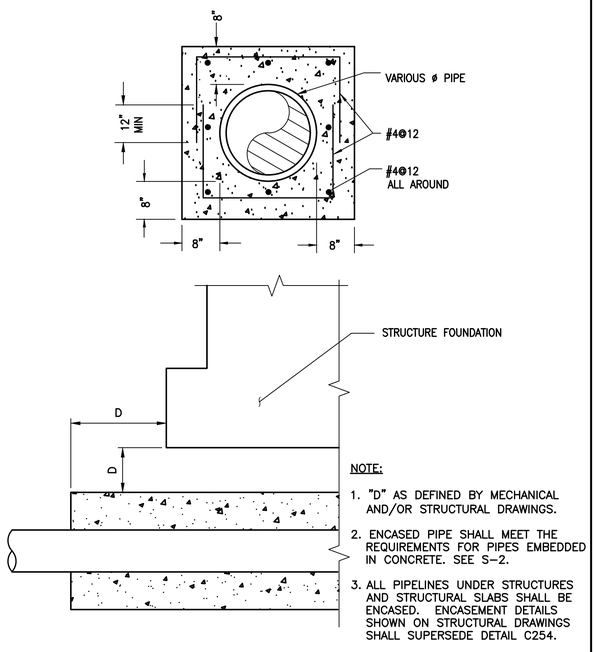

CONCRETE ENCASEMENT C254
NTS

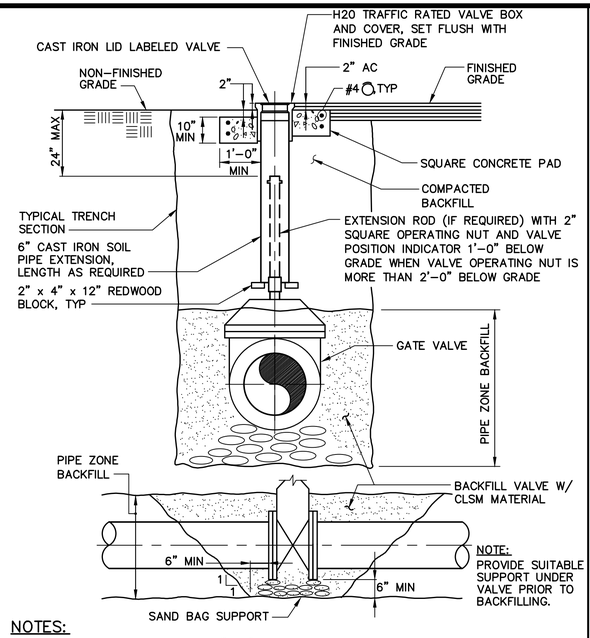

NOTES:
1. CONTRACTOR SHALL PROVIDE A "KEY" OF SUITABLE LENGTH TO CONNECT TO VALVE. FOR ALL OTHER VALVES A RISER SHALL BE PROVIDED.

BURIED GATE VALVE C285
NTS

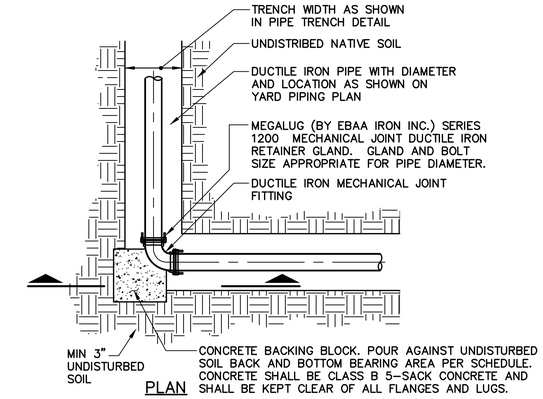

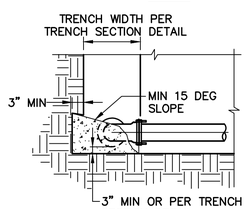

REQUIRED BEARING AREA (SF)			
PIPE SIZE	TEE	90	45
6	5	6	4
8	8	11	7
10	11	15	10
12	17	24	16
14	22	31	23
16	30	42	30
18	39	54	35

NOTES:
1. BEARING AREA IS BASED ON PRESSURE OF 150 PSI WITH A SOIL BEARING CAPACITY OF 1000 PSF. OTHER CONDITIONS SHALL BE MODIFIED TO HANDLE THE ASSOCIATED THRUST AND SUBMITTED TO THE ENGINEER FOR APPROVAL.

ALTERNATIVE DUCTILE IRON PIPE THRUST RESTRAINT C252
NTS

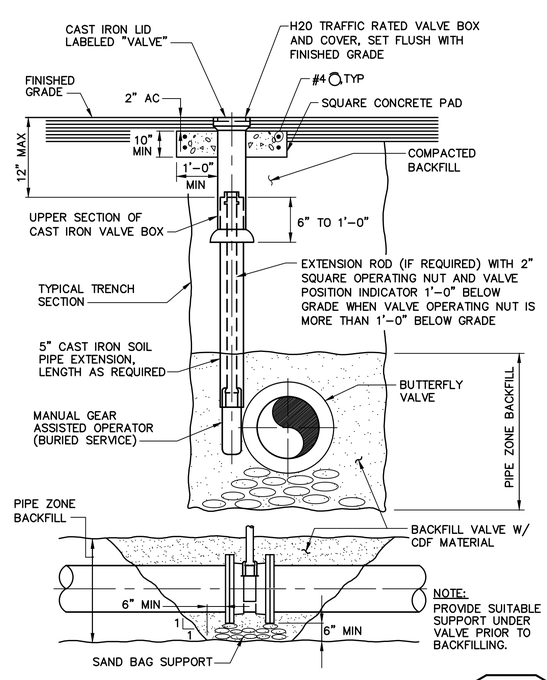

BURIED BUTTERFLY OR PLUG VALVE BOX C282
NTS

RECORD DRAWING
THIS RECORD DRAWING HAS BEEN PREPARED FROM THE ORIGINAL CONTRACT DOCUMENTS SIGNED AND SEALED BY THE RESPONSIBLE ENGINEER OF RECORD. ADDITIONAL INFORMATION HAS BEEN PROVIDED BY OTHERS TO REPRESENT AS–CONSTRUCTED CONDITION AND IS SHOWN ON THESE RECORD DRAWINGS. THE RESPONSIBLE ENGINEER OF RECORD CANNOT VERIFY THE ACCURACY OF THE AS–CONSTRUCTED CONDITION INFORMATION REPRESENTED ON THE RECORD DRAWINGS.

0" — 1" VERIFY SCALES — BAR IS ONE INCH LONG ON FULL SIZE DRAWING. IF NOT ONE INCH LONG ON THIS DRAWING, ADJUST SCALES ACCORDINGLY

Woodard & Curran

REV	DATE	BY	APVD	DESCRIPTION
1	07/22	CT	TV	RECORD DRAWING

DESIGNED M. TAKEMOTO
DRAWN C. TO
CHECKED M. NAKAMOTO

SUBMITTED: MARK TAKEMOTO, RMC PROJECT ENGINEER CE-64369
APPROVED: STEVE CLARY, RMC ENGINEER CE-30318

SAUSALITO · MARIN CITY SANITARY DISTRICT

TREATMENT AND WET WEATHER FLOW UPGRADE

CIVIL STANDARD DETAILS - 6

DWG NO C-7
SHEET NO 35 OF 226
PROJ NO 055-006
DATE JULY 2022

FILENAME: 0055-006-C-2 8-01-22 12:11pm cto || XREFS: X-SMCSD-TBLK |<<--
Last Saved By: cto 8-01-22 10:09am

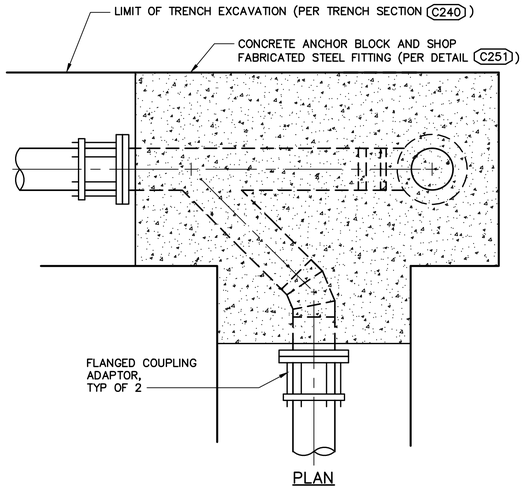

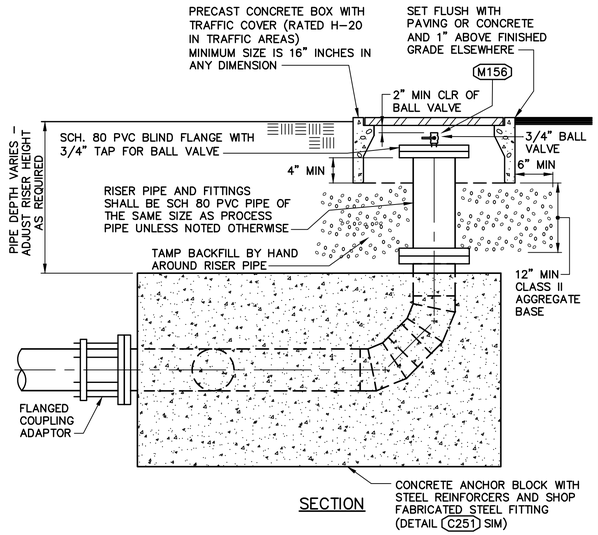

SLUDGE PIPE AIR RELEASE/CLEANOUT C301

NTS

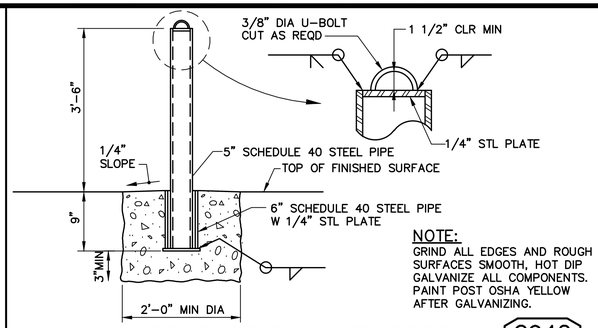

NOTE:
GRIND ALL EDGES AND ROUGH SURFACES SMOOTH, HOT DIP GALVANIZE ALL COMPONENTS. PAINT POST OSHA YELLOW AFTER GALVANIZING.

REMOVABLE GUARD POST C942

NTS

SITUATION: LOCATION OF NEW RECYCLED WATER AND SEWER LINES TO EXISTING DOMESTIC WATER LINES.

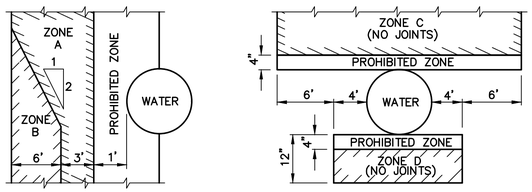

PARALLEL CONSTRUCTION — PERPENDICULAR CROSSING

IF ANY RECYCLED WATER OR SEWER PIPELINES ARE TO BE CONSTRUCTED WITHIN ANY OF THE ABOVE INDICATED ZONES, SPECIAL CONSTRUCTION SHALL BE REQUIRED AS DESCRIBED BELOW.

ZONE	RECYCLED WATER
A	DO NOT LOCATE ANY PARALLEL RECYCLED WATER OR SEWER LINES IN THIS AREA WITHOUT STATE AND LOCAL HEALTH DEPARTMENT APPROVAL.
B	USE CLASS 200 DIP, CLASS 200 PVC – AWWA C900, WELDED STEEL, HDPE OR FUSED PVC PIPE
C	USE CLASS 200 DIP, CLASS 200 PVC – AWWA C900 OR WELDED STEEL, , HDPE OR FUSED PVC PIPE
D	USE CLASS 200 DIP OR CLASS 200 PVC – AWWA C900 OR WELDED STEEL, HDPE OR FUSED PVC PIPE

BASIC SEPARATION STANDARDS

1. PARALLEL CONSTRUCTION: THE HORIZONTAL DISTANCE BETWEEN PRESSURE DOMESTIC WATER AND RECYCLED WATER MAINS AND SEWER LINE SHALL BE AS SHOWN.
2. PERPENDICULAR CONSTRUCTION (CROSSING): PRESSURE WATER MAINS SHALL BE AT LEAST ONE FOOT ABOVE SANITARY SEWER AND RECYCLED WATER LINES WHERE THESE LINES MUST CROSS.
3. SPECIAL PROVISIONS: ALTERNATIVE CONSTRUCTION CRITERIA WHERE THE BASIC SEPARATION STANDARDS CANNOT BE ATTAINED ARE SHOWN ABOVE.

GENERAL NOTES

1. NO PIPE JOINTS SHALL BE PERMITTED WITHIN ZONE D. IT IS THE INTENT OF THESE SPECIFICATIONS THAT NO JOINTS SHALL OCCUR WITHIN ZONE C. IF THAT CANNOT BE ACCOMPLISHED, THE NEW PIPELINE SHALL BE ENCASED IN CONCRETE FOR THE FULL LENGTH OF ZONE C.
2. ALL DIP MUST HAVE HOT DIP BITUMINOUS COATING AND ALL PVC SHALL BE CLASS 200 PER AWWA C900 OR EQUIVALENT.
3. SEWER FORCE MAINS SHALL NOT BE PERMITTED IN ZONES A THROUGH D.
4. THIS CRITERIA DOES NOT APPLY FOR A RECYCLED WATER LINE CROSSING ANOTHER RECYCLED WATER LINE.
5. THE CONSTRUCTION CRITERIA APPLIES TO HOUSE LATERALS THAT CROSS ABOVE A PRESSURE WATER MAIN BUT NOT TO THOSE HOUSE LATERALS THAT CROSS BELOW A PRESSURE WATER MAIN.

STANDARD CLEARANCES TO SEWERS AND DOMESTIC WATER MAINS C384

NTS

RECORD DRAWING
THIS RECORD DRAWING HAS BEEN PREPARED FROM THE ORIGINAL CONTRACT DOCUMENTS SIGNED AND SEALED BY THE RESPONSIBLE ENGINEER OF RECORD. ADDITIONAL INFORMATION HAS BEEN PROVIDED BY OTHERS TO REPRESENT AS-CONSTRUCTED CONDITION AND IS SHOWN ON THESE RECORD DRAWINGS. THE RESPONSIBLE ENGINEER OF RECORD CANNOT VERIFY THE ACCURACY OF THE AS-CONSTRUCTED CONDITION INFORMATION REPRESENTED ON THE RECORD DRAWINGS.

0" — 1" VERIFY SCALES — BAR IS ONE INCH LONG ON FULL SIZE DRAWING. IF NOT ONE INCH LONG ON THIS DRAWING, ADJUST SCALES ACCORDINGLY

Woodard & Curran

REV	DATE	BY	APVD	DESCRIPTION
1	07/22	CT	TV	RECORD DRAWING

DESIGNED M. TAKEMOTO
DRAWN C. TO
CHECKED M. NAKAMOTO

SUBMITTED: MARK TAKEMOTO, RMC PROJECT ENGINEER CE-64369
APPROVED: STEVE CLARY, RMC ENGINEER CE-30318

SAUSALITO · MARIN CITY SANITARY DISTRICT

TREATMENT AND WET WEATHER FLOW UPGRADE

CIVIL STANDARD DETAILS - 7

DWG NO C-8
SHEET NO 36 OF 226
PROJ NO 055-006
DATE JULY 2022

FILENAME: 0055-006-C-2 8-01-22 12:11pm cto || XREFS: X-SMCSD-TBLK |<<--

Last Saved By: cto 8-01-22 10:09am

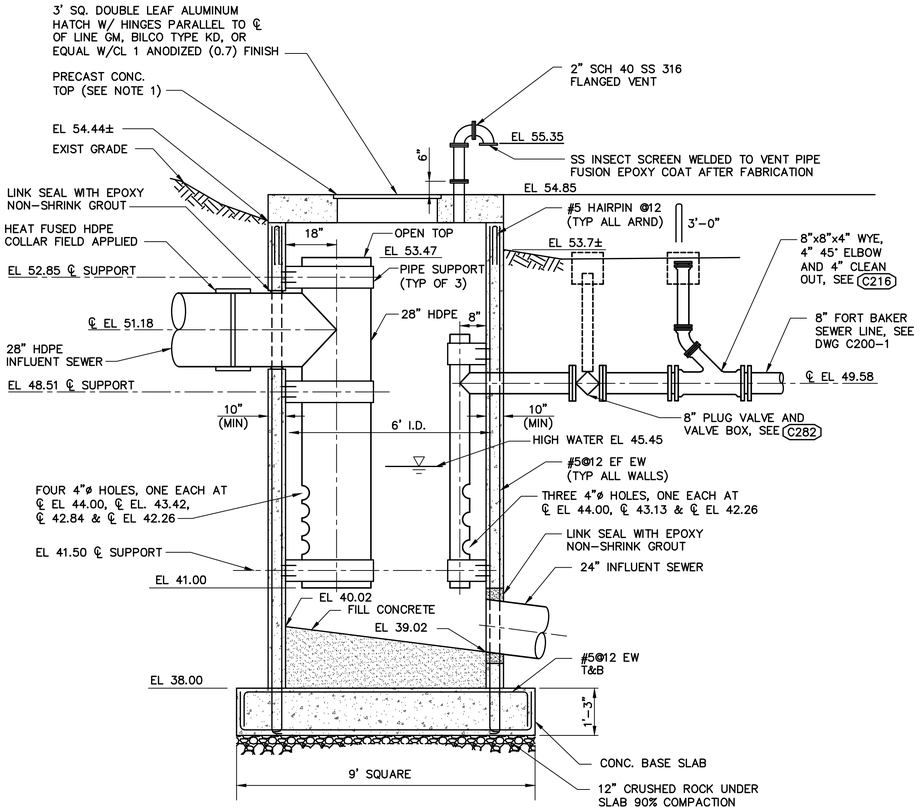

NOTES:

1. PROVIDE PVC LINER INSIDE MANHOLE, UNDERSIDE OF TOP AND INSIDE HATCH OPENING, PER SECTION 06620, SEAL JOINTS IN FIELD. PRECAST LID SHALL BE POSITIVELY ATTACHED TO CAST-IN-PLACE WALLS. USE OF SELF WEIGHT ONLY IS NOT PERMISSIBLE. CONTRACTOR SHALL COORDINATE WITH PRECAST SUPPLIER PRIOR TO PLACING WALLS.
2. PIPES ARE SHOWN ROTATED INTO SECTION VIEW FOR CLARITY. SEE PLAN VIEW FOR PROPER ORDINATION.

ENERGY DISSIPATION STRUCTURE DETAIL 1

NTS C200-1

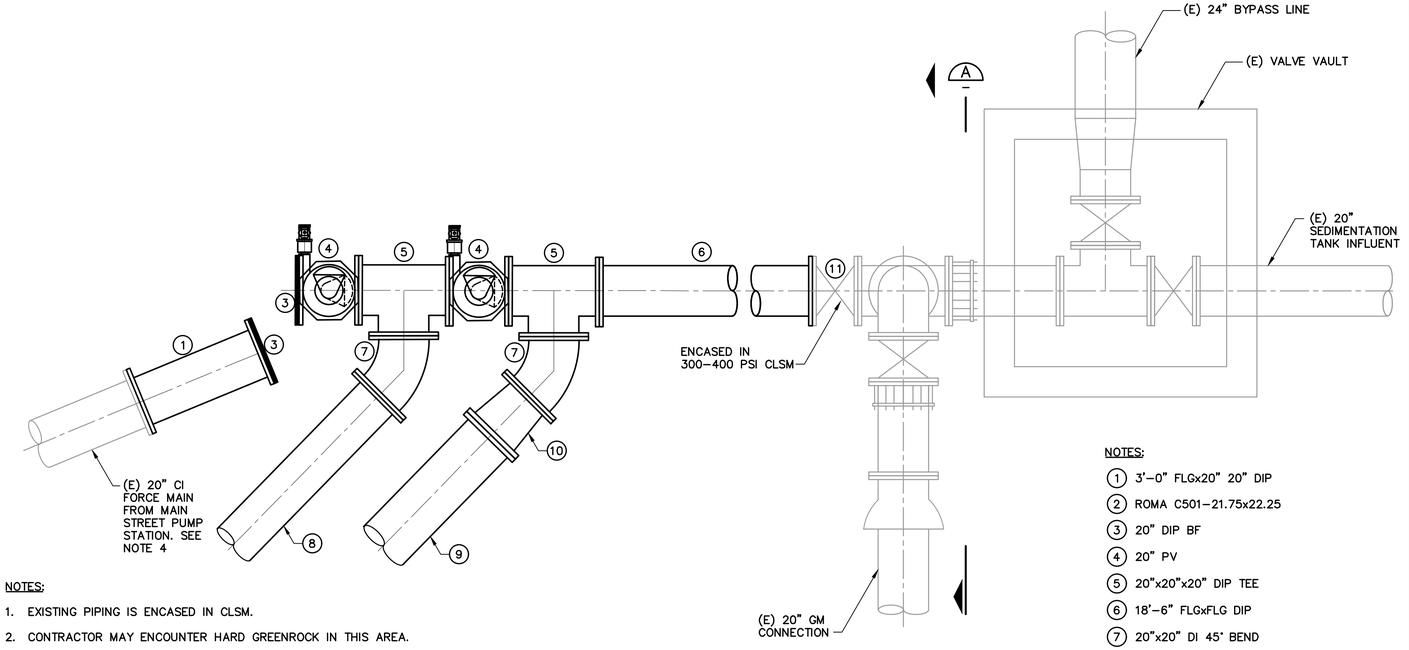

NOTES:

1. EXISTING PIPING IS ENCASED IN CLSM.
2. CONTRACTOR MAY ENCOUNTER HARD GREENROCK IN THIS AREA.
3. EXISTING 20" FORCEMAIN IS IN SERVICE. CONTRACTOR SHALL BE RESPONSIBLE FOR CONTAINING AND DISPOSING OF ANY SEWAGE DRAINED FROM THE EXISTING PIPELINE. SEE SECTION 01030 FOR SHUTDOWN REQUIREMENTS.
4. THERE IS AN EXISTING WYE WITH A DI MJ PLUG LOCATED ALONG THE BEACH UPSTREAM OF THE PLANT CONNECTION. CONTRACTOR MAY USE THIS WYE FOR DEWATERING OF THE FORCEMAIN. SEWAGE FROM THE FORCEMAIN DEWATERING MAY BE RETURNED TO THE EXISTING PRIMARY CLARIFIER WITH A FILTER SOCK INSTALLED ON THE DISCHARGE HOSE.
5. PROVIDE CATHODIC PROTECTION FOR PIPE, VALVES AND APPURTENANCES IN ACCORDANCE WITH SPECIFICATION SECTION 13115. TEST STATIONS SHALL BE LOCATED OUTSIDE THE LIMITS OF THE ENCASEMENT STRUCTURE FOR ACCESS.

NOTES:

1. 3'-0" FLGx20" 20" DIP
2. ROMA C501-21.75x22.25
3. 20" DIP BF
4. 20" PV
5. 20"x20"x20" DIP TEE
6. 18'-6" FLGxFLG DIP
7. 20"x20" DI 45° BEND
8. 20" HDPE DR11 FLANGE HDPE PIPE POLYPROP BACK RING)
9. 24" HDPE DR17
10. 20"x24" DIP REDUCER
11. EXISTING VALVE (SPACER WAS EXISTING [~4'] WAS REMOVED DURING NEW INSTALL)

ALL DIP:

CML, COATED WITH MACROPOXY 646
316SS BOLT UP KITS CLASS 150
PIPE AND FLANGES ALL DIP IS
ELECTRONICALLY CONTROLED.

NEW PRIMARY INFLUENT CONNECTION AT EXISTING PRIMARY CLARIFIER DETAIL 2

NTS C200-1

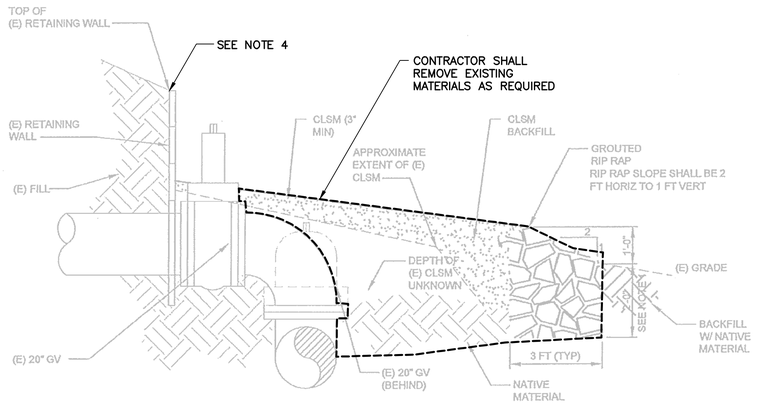

SECTION A

NTS

NOTES:

1. CONTRACTOR SHALL RETAIN ALL RIP RIP EXCAVATED FOR CONSTRUCTION AND REINSTALL AFTER PIPELINE CONSTRUCTION.
2. AFTER PIPELINE IS CONSTRUCTED AND TESTED, BACKFILL EXCAVATION WITH CLSM TO EXISTING GRADE (MIN) AND PROVIDE A MINIMUM OF 4" CLSM COVER OVER ANY APPURTENANCE OR COMPONENT.
3. REINSTALL EXCAVATED RIP RAP TO MATCH EXISTING CONDITIONS. GROUT ALL RIP RAP
4. CONTRACTOR SHALL DEMOLISH EXISTING RETAINING WALL ONLY TO EXTENT REQUIRED FOR CONSTRUCTION OF PIPE ENCASEMENT STRUCTURE. VERIFY EXISTING GRADE AND REGRADE AS REQUIRED FOR CONSTRUCTION.

RECORD DRAWING
THIS RECORD DRAWING HAS BEEN PREPARED FROM THE ORIGINAL CONTRACT DOCUMENTS SIGNED AND SEALED BY THE RESPONSIBLE ENGINEER OF RECORD. ADDITIONAL INFORMATION HAS BEEN PROVIDED BY OTHERS TO REPRESENT AS-CONSTRUCTED CONDITION AND IS SHOWN ON THESE RECORD DRAWINGS. THE RESPONSIBLE ENGINEER OF RECORD CANNOT VERIFY THE ACCURACY OF THE AS-CONSTRUCTED CONDITION INFORMATION REPRESENTED ON THE RECORD DRAWINGS.

0" — 1" — VERIFY SCALES — BAR IS ONE INCH LONG ON FULL SIZE DRAWING. IF NOT ONE INCH LONG ON THIS DRAWING, ADJUST SCALES ACCORDINGLY

Woodard & Curran

REV	DATE	BY	APVD	DESCRIPTION
1	07/22	CT	TV	RECORD DRAWING

DESIGNED M. TAKEMOTO
DRAWN C. TO
CHECKED M. NAKAMOTO

SUBMITTED: MARK TAKEMOTO, RMC PROJECT ENGINEER CE-64369
APPROVED: STEVE CLARY, RMC ENGINEER CE-30318

SAUSALITO · MARIN CITY SANITARY DISTRICT

TREATMENT AND WET WEATHER FLOW UPGRADE

CIVIL MISCELLANEOUS DETAILS

DWG NO	C-9
SHEET NO	37 OF 226
PROJ NO	055-006
DATE	JULY 2022

FILENAME: 0055-006-C-9 8-01-22 12:11pm cto || XREFS: | X-SMCSD-TBLK |<<--

Last Saved By: cto 8-01-22 10:11am

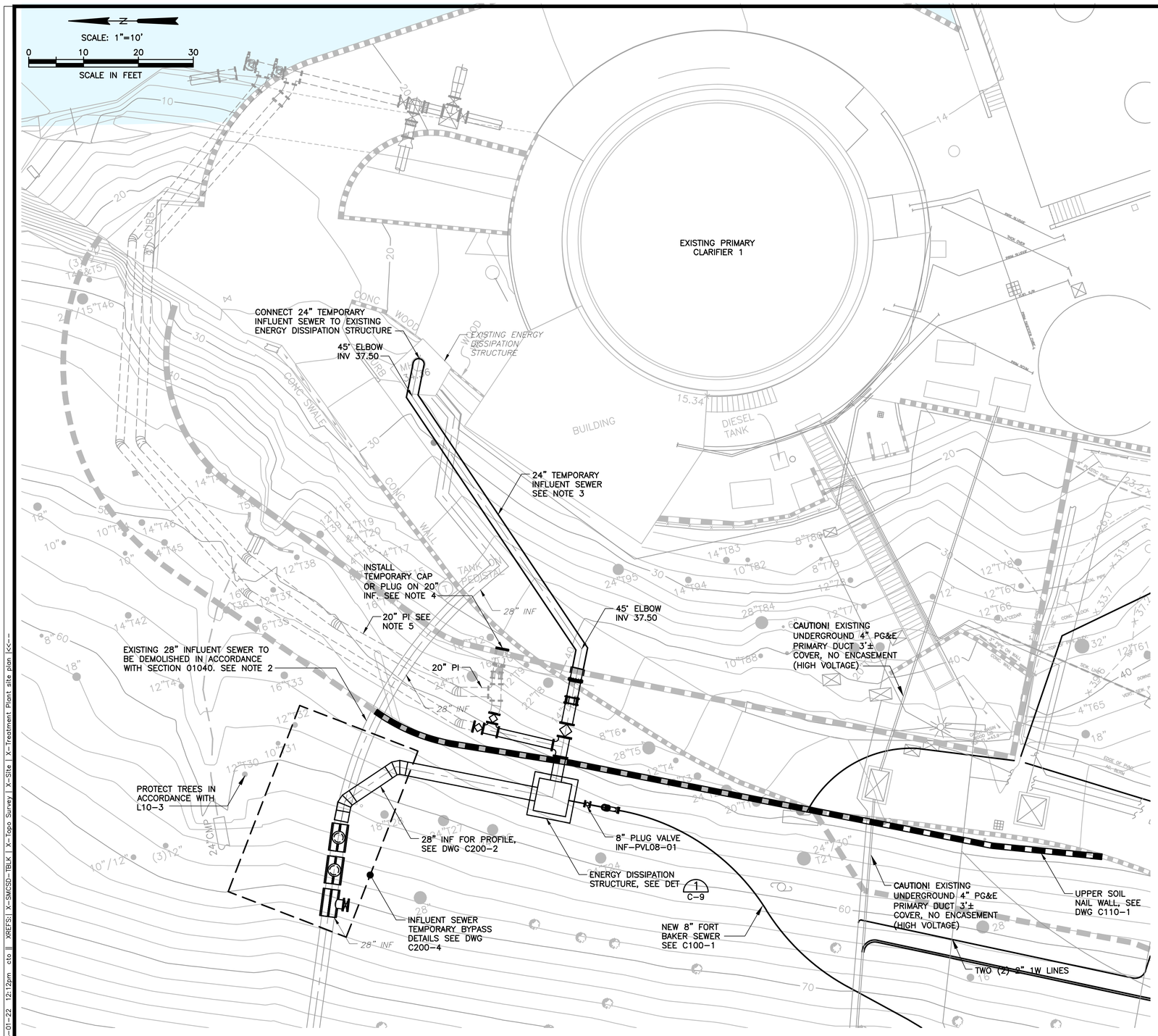

TEMPORARY INFLUENT SEWER PLAN

1" = 10'

NOTES:

1. LOCATION OF EXISTING UTILITIES SHOWN IS APPROXIMATE. NOT ALL UTILITIES MAY BE SHOWN. CONTRACTOR SHALL VERIFY UTILITY LOCATION AND SERVICE IN THE FIELD PRIOR TO DEMOLITION.
2. THE 24" TEMPORARY INFLUENT SEWER LINE SHALL BE PLACED INTO SERVICE PRIOR TO DEMOTION OF THE EXISTING 28" INFLUENT SEWER.
3. CONTRACTOR USE TEMPORARY SUPPORTS AND/OR RESTRAINTS AS NEEDED TO SUPPORT THE 24" TEMPORARY INFLUENT SEWER. CONTRACTOR SHALL MAINTAIN VEHICLE ACCESS TO THE TREATMENT PLANT PROCESS AREA AS REQUIRED IN SECTION 01040. CONTRACTOR SHALL PROTECT THE 24" TEMPORARY INFLUENT SEWER WITH TRENCH PLATES OR OTHER METHODS TO ALLOW FOR VEHICLE TRAFFIC.
4. THE TEMPORARY CAP OR PLUG SHALL REMAIN IN PLACE UNTIL THE PERMANENT 24" INFLUENT SEWER CONNECTION TO THE NEW HEADWORKS IS COMPLETE AND PLACED INTO SERVICE.
5. THE CONTRACTOR MAY USE THE NEW 20" INF LINE AS A TEMPORARY INFLUENT SEWER BYPASS LINE AFTER CONSTRUCTION OF THE NEW 20" INF HAS BEEN COMPLETED.
6. TYPICAL DRY WEATHER FLOW THROUGH THE 28" INF LINE RANGES FROM 0.5 MGD TO 2.0 MGD.
7. TYPICAL DRY WEATHER FLOW THROUGH THE 8" FT BAKER INFLUENT SEWER LINE RANGES FROM 0.05 MGD TO 0.02 MGD.

RECORD DRAWING
THIS RECORD DRAWING HAS BEEN PREPARED FROM THE ORIGINAL CONTRACT DOCUMENTS SIGNED AND SEALED BY THE RESPONSIBLE ENGINEER OF RECORD. ADDITIONAL INFORMATION HAS BEEN PROVIDED BY OTHERS TO REPRESENT AS-CONSTRUCTED CONDITION AND IS SHOWN ON THESE RECORD DRAWINGS. THE RESPONSIBLE ENGINEER OF RECORD CANNOT VERIFY THE ACCURACY OF THE AS-CONSTRUCTED CONDITION INFORMATION REPRESENTED ON THE RECORD DRAWINGS.

0" — 1" — VERIFY SCALES — BAR IS ONE INCH LONG ON FULL SIZE DRAWING. IF NOT ONE INCH LONG ON THIS DRAWING, ADJUST SCALES ACCORDINGLY

Woodard & Curran

REV	DATE	BY	APVD	DESCRIPTION
1	07/22	CT	TV	RECORD DRAWING

DESIGNED M. TAKEMOTO
DRAWN C. TO
CHECKED M. NAKAMOTO

SUBMITTED: MARK TAKEMOTO, RMC PROJECT ENGINEER CE-64369
APPROVED: STEVE CLARY, RMC ENGINEER CE-30318

SAUSALITO · MARIN CITY SANITARY DISTRICT

TREATMENT AND WET WEATHER FLOW UPGRADE

TEMPORARY INFLUENT SEWER PLAN

DWG NO C20
SHEET NO 38 OF 226
PROJ NO 055-006
DATE JULY 2022

FILENAME: 0055-006-C20 8-01-22 12:12pm cto || XREFS: X-SMCSD-TBLK | X-Topo Survey | X-Site | X-Treatment Plant site plan |<<--

Last Saved By: cto 8-01-22 10:10am

SCALE: 1"=10'

0 10 20 30

SCALE IN FEET

TEMPORARY PROCESS PIPELINES TO BE FIELD ROUTED AND PROVIDED BY CONTRACTOR

U1. 28" INF (FROM MAIN ST. PS). SEE C200–1.
U2. 8" SS (PERMANENT LINE FROM FT. BAKER). NOT SHOWN. SEE C100–1.
U3. 4" SEWER (FROM OFFICE)
U4. FC TANK, METERING PUMP
U5. 1/2" FC IN 3" CONTAINMENT PIPE (FROM CHEMICAL PULLBOX TO FC TANK ON TO DIGESTER)
U6. 2" 1W
U7. 4" R (FROM RETURN PS)
U8. TWO (2) 3" DG (TO/FROM SECONDARY DIGESTER)
U9. 6" SD
U10. 12" SE (FROM EFFLUENT FILTER CHANNEL CHLORINE CONTACT TANK INLET)
U11. 4" 3W
U12. 12" SD
U13. HILLSIDE STORM WATER RUN OFF TO BAY (CONTRACTOR TO PROVIDE MIN. 24" DIA. PIPE)
U14. 4" PUMPED DRAIN (FROM SUMP PUMP)

TEMPORARY FACILITIES TO BE PROVIDED BY THE CONTRACTOR

F1. PLANT POWER (SEE E100–2)
F2. SECONDARY FILTRATION
F3. DIESEL FUEL STORAGE
F4. POLYMER STORAGE
F5. DEWATERED SLUDGE TRANSFER

NOTES:

1. ADDITIONAL TEMPORARY UTILITIES/FACILITIES DETAILS AND REQUIREMENTS ARE LISTED IN SECTION 01040.
2. CONTRACTOR SHALL FIELD VERIFY EXISTING UTILITIES AND PROCESS PIPING LOCATIONS AND CONNECTION REQUIREMENTS. SEE D–2 FOR UTILITY DEMOLITION REQUIREMENTS.
3. THE BEGINNING LOCATION FOR EACH TEMPORARY UTILITY IS MARKED WITH AN "A" AT THE BOTTOM. THE END LOCATION FOR THE TEMPORARY UTILITY LOCATION IS MARKED WITH AN "B" AT THE BOTTOM. UTILITY SERVICE SHALL CONTINUE ON TO LOCATION "C" IF INDICATED.

TEMPORARY UTILITIES PLAN

1" = 10'

RECORD DRAWING
THIS RECORD DRAWING HAS BEEN PREPARED FROM THE ORIGINAL CONTRACT DOCUMENTS SIGNED AND SEALED BY THE RESPONSIBLE ENGINEER OF RECORD. ADDITIONAL INFORMATION HAS BEEN PROVIDED BY OTHERS TO REPRESENT AS–CONSTRUCTED CONDITION AND IS SHOWN ON THESE RECORD DRAWINGS. THE RESPONSIBLE ENGINEER OF RECORD CANNOT VERIFY THE ACCURACY OF THE AS–CONSTRUCTED CONDITION INFORMATION REPRESENTED ON THE RECORD DRAWINGS.

0" 1" — VERIFY SCALES — BAR IS ONE INCH LONG ON FULL SIZE DRAWING. IF NOT ONE INCH LONG ON THIS DRAWING, ADJUST SCALES ACCORDINGLY

Woodard & Curran

REV	DATE	BY	APVD	DESCRIPTION
1	07/22	CT	TV	RECORD DRAWING

DESIGNED M. TAKEMOTO
DRAWN C. TO
CHECKED M. NAKAMOTO

SUBMITTED: MARK TAKEMOTO, RMC PROJECT ENGINEER CE-64369
APPROVED: STEVE CLARY, RMC ENGINEER CE-30318

SAUSALITO • MARIN CITY SANITARY DISTRICT

TREATMENT AND WET WEATHER FLOW UPGRADE

TEMPORARY UTILITIES PLAN

DWG NO C21
SHEET NO 39 OF 226
PROJ NO 055-006
DATE JULY 2022

FILENAME: 055-006-C21 8-01-22 12:09pm cto || XREFS:| X-SMCSD-TBLK | X-Topo Survey | X-Site | X-Treatment Plant site plan |<<--

Last Saved By: cto 8-01-22 10:10am

N

SCALE: 1"=20'

0 20 40 60

SCALE IN FEET

SAN FRANCISCO BAY

SEE DWGS C100-2 AND C200-1

SEE DWG C100-3

NOTES:

1. LOCATION AND DEPTHS OF EXISTING FORT BAKER 8" SEWER AND OTHER UTILITIES ARE APPROXIMATE. NOT ALL UTILITIES MAY BE SHOWN. CONTRACTOR SHALL POTHOLE, LOCATE, AND VERIFY UTILITIES IN THE FIELD.
2. WORK IS REQUIRED IN CLOSE PROXIMITY TO AN EXISTING FIBER OPTIC (FO) LINE AND HIGH VOLTAGE PG&E POWER FEED. THE CONTRACTOR SHALL USE EXTREME CAUTION WHEN WORKING IN THESE AREAS. THE CONTRACTOR SHALL AVOID DAMAGING OR DISRUPTING THE FO LINE. ANY FINES OR PENALTIES RESULTING FROM INTERRUPTION OF THE FO LINE OR SERVICE SHALL BE THE SOLE RESPONSIBILITY OF THE CONTRACTOR AT NO ADDITIONAL COST TO THE DISTRICT.
3. WORK SHALL BE PERFORMED IN ACCORDANCE WITH SECTION 01040.
4. EXISTING CONCRETE VAULT SHALL BE REHABILITATED. THE EXISTING VAULT IS APPROXIMATELY 8 FEET BY 8 FEET AND 14 FEET DEEP WITH A MANHOLE COVER. THE EXISTING VAULT IS A CONFINED SPACE. CONTRACTOR SHALL REPAIR THE ENTIRE CONCRETE INTERIOR SURFACE OF THE VAULT IN ACCORDANCE WITH SECTION 03740 AND SECTION 09960. THE INTERIOR OF THE VAULT SHALL BE LINED WITH AN EPOXY COATING SYSTEM IN ACCORDANCE WITH SECTION 09960. THE CONTRACTOR SHALL INSTALL A NEW CONCRETE TOP WITH A PRECAST H20 TRAFFIC RATED MANHOLE LID ON THE EXISTING STRUCTURE.
5. CONTRACT SHALL STAKE PIPELINE ALIGNMENTS FOR APPROVAL BY THE CONSTRUCTION MANAGER AND NPS AT LEAST TWO WEEKS PRIOR TO THE START OF CONSTRUCTION.
6. ALL BURIED PLASTIC PIPE SHALL BE INSTALLED WITH LOCATING WIRE AS REQUIRED IN SECTION 02500.

EXISTING PRIMARY CLARIFIER 1

PRIMARY CLARIFIER 2

HEADWORKS

CAUTION! EXISTING UNDERGROUND 4" PG&E PRIMARY DUCT 3'± COVER, NO ENCASEMENT (HIGH VOLTAGE)

EQ STRUCTURE

EFFLUENT FILTERS

(E) SUMP PUMPS

TANK

DIESEL TANK

SHIPPING CONTAINER (FLAMMABLE LIQUIDS)

SHED

GARAGE

GAZEBO

GARDEN BUILDING

ENGINE SHOP

OFFICE

GM BUILDING

FUEL STATION

12" TREE AT DECK

GROUND

12" CMP SD

PLANT ACCESS ROAD

EAST ROAD

AC PAVEMENT

AC PAVEMENT 6" AC WITH 12" BASE

40' RADIUS BEND

EXISTING 28" INFLUENT SEWER

CAUTION! EXISTING UNDERGROUND 4" PG&E PRIMARY DUCT 3'± COVER, NO ENCASEMENT (HIGH VOLTAGE)

(2) 2" 1W (LOCATION IS APPROXIMATE), SEE NOTE 1

CONTRACTOR SHALL PROTECT EXISTING TREES IN PLACE AND SHALL ADJUST THE PIPELINE ALIGNMENT AS NECESSARY TO AVOID TREE ROOT ZONES AT NO ADDITIONAL COST TO THE OWNER, TYP.

MAINTAIN SEPERATION REQUIREMENTS FROM POTABLE WATER LINE PER DETAIL C384

8" FORT BAKER FORCE MAIN EXTENSION FOR PROFILE SEE DWG C200-3

EXISTING 20" FORCE MAIN SEWER

EXISTING SEWER MANHOLE

FORT BAKER ROAD

ALEXANDER AVENUE

MH1

CONSTRUCT 4' DIA SEWER MANHOLE PER DETAIL C200

CAUTION! EXISTING FO LINE. SEE NOTE 2

EXISTING 8" FORT BAKER SEWER

EXISTING 1" HYPOCHLORITE LINE IN 3" CONTAINMENT PIPE

EXISTING 6" FORT BAKER SEWER

REHABILITATE EXISTING CONCRETE MANHOLE. SEE NOTE 4

HEAVY VEGETATION THROUGHOUT HILLSIDE

AC PAVEMENT 2" GRIND AND OVERLAY ABOVE REDWOOD

REPLACED FITTINGS ON 12" CMP SD

RIGHT OF WAY LINE

18

19

PLAN

1" = 20'

Estimated Cut and Fill Quantites (Cubic Yards)

Area	Cut	Fill	Net
New Road	1003	9	994
Primary Clarifier No. 2	1805	0	1805
Headworks/EQ Strucutre	4456	0	4456
Admin Bldg Retaining Wall	165	0	165
Area Around EQ Structure	637	18	620
Total	**8067**	**27**	**8040**

RECORD DRAWING

THIS RECORD DRAWING HAS BEEN PREPARED FROM THE ORIGINAL CONTRACT DOCUMENTS SIGNED AND SEALED BY THE RESPONSIBLE ENGINEER OF RECORD. ADDITIONAL INFORMATION HAS BEEN PROVIDED BY OTHERS TO REPRESENT AS-CONSTRUCTED CONDITION AND IS SHOWN ON THESE RECORD DRAWINGS. THE RESPONSIBLE ENGINEER OF RECORD CANNOT VERIFY THE ACCURACY OF THE AS-CONSTRUCTED CONDITION INFORMATION REPRESENTED ON THE RECORD DRAWINGS.

0" — 1" — VERIFY SCALES — BAR IS ONE INCH LONG ON FULL SIZE DRAWING. IF NOT ONE INCH LONG ON THIS DRAWING, ADJUST SCALES ACCORDINGLY

Woodard & Curran

REV	DATE	BY	APVD	DESCRIPTION
1	07/22	CT	TV	RECORD DRAWING

DESIGNED M. TAKEMOTO
DRAWN C. TO
CHECKED M. NAKAMOTO

SUBMITTED: MARK TAKEMOTO, RMC PROJECT ENGINEER CE-64369

APPROVED: STEVE CLARY, RMC ENGINEER CE-30318

SAUSALITO · MARIN CITY SANITARY DISTRICT

TREATMENT AND WET WEATHER FLOW UPGRADE

CIVIL
SITE GRADING AND PAVING
OVERALL PLAN

DWG NO C100-1
SHEET NO 40 OF 226
PROJ NO 055-006
DATE JULY 2022

FILENAME: 055-006-C100-1 8-01-22 12:12pm cto || XREFS: X-SMCSD-TBLK | X-Topo Survey | X-Site | X-Treatment Plant site plan |<C>--

Last Saved By: cto 8-01-22 10:09am

SAN FRANCISCO BAY

SCALE: 1"=10'
0 10 20 30
SCALE IN FEET

NOTES:
1. ONLY HEADWORKS/EQ STRUCTURE FOOTPRINT SHOWN FOR CLARITY. SEE DRAWING M100–1 FOR ADDITIONAL DETAILS.
2. CONTRACTOR TO DEMOLISH PG&E 12 KV PULL BOX AND RELOCATE PER DRAWING.
3. ALL PROPOSED CATCH BASIN SHALL BE PER (C182).
4. AREAS POTENTIALLY CONTAINING HARD GREENSTONE ARE INDICATED IN THE GEOTECH REPORT TITLED "GEOTECHNICAL INVESTIGATION , TREATMENT PLANT UPGRADE PROJECT, SAUSALITO–MARIN CITY SANITARY DISTRICT", MILLER PACIFIC ENGINEERING GROUP, MARCH 2014
5. CONCRETE PAVEMENT SHALL BE PER CALTRANS JOINT PLAIN CONCRETE PAVEMENT REVISED STANDARD PLAN RSP P1. CONCRETE PAVEMENT SHALL HAVE A MINIMUM THICKNESS OF 7–INCHES OVER A 12–INCH LAYER OF AGGREGATE BASE. FOR GRADES GREATER THAN 3%, CONCRETE PAVING SHALL BE INTENTIONALLY SCARIFIED. MAXIMUM SPACING BETWEEN CONCRETE JOINTS SHALL BE LESS THAN 15 FEET.
6. INSTALL GUARDRAIL PER DRAWING CDC–15.
7. ALL REMAINING TREES IN THE VICINITY OF THE RELOCATED TRANSFORMER "NOTCH" ARE TO BE PROTECTED, INCLUDING THE EXISTING OAK TO THE SOUTH OF THE "NOTCH" (NOT SHOWN).
8. MAXIMUM GROUND SLOPE SHALL NOT EXCEED 2% IN ANY DIRECTION FOR A DISTANCE OF 8' IN FRONT OF THE TRANSFORMER OPENING.
9. TRANSFORMER PAD SHALL NOT BE LESS THAN 3' FROM BASE OF THE FINISHED WALL AT ANY POINT.
10. CONTRACTOR SHALL FIELD VERIFY GUARD POST LOCATIONS AND QUANTITY WITH OWNER.

VIEWING AREA, SEE DWG S030–1
42" SURFACE MOUNTED REMOVABLE BOLLARD, ULINE, OR EQUAL (TYP OF 3)
4'–0"
6" FLOOR DRAIN, PER (M282) RIM EL. 22.9
RETAINING WALLS AND CONCRETE SLAB, GUARDRAIL AND DEMOLITION SEE STRUCT DWGS
CLSM BACK FILL TO EL 11.0. RW3
BACK FILL: LIGHTWEIGHT TO EL 14.5, CLASS 2 TO BACK OF SLAB
EXISTING 28" FOIL AIR
PI N 2135779.55 E 5990785.10
PI N 2135754.13 E 5990779.96
EXISTING STAIRS, PROTECT IN PLACE
EXISTING SUMP PUMPS
CONCRETE PAVEMENT
EXISTING PRIMARY CLARIFIER 1
PRIMARY CLARIFIER 2
TOP WEIR 24.64
TOP WEIR 24.63
TOP WEIR 24.66
TW 26.75
TW 26.66
4" HIGH CONCRETE CURB
BETS
CB6 RIM 46.00 N 2135833.66 E 5990755.12 INV 41.67
CB7 RIM 23.40 N 2135812.56 E 5990770.88 INV 20.43
CB3 RIM. 15.92
SIDE INLET CATCH BASIN, SEE (C185)
INLET EL 44.0
CLASS 2 AB FILL TO SUBGRADE EL 11.0 TO EL 20.0
RETAINING WALL (RW1), SEE STRUCT DWGS
R=37.50'
CAP IN GUARDRAIL
FORMED CJ AT SN WALL
TRANSVERSE CONTRACTION JOINTS PER CALTRANS P1, P10, AND P15 WITH DOWEL BASKETS. SAWCUT AFTER CONCRETE SET WITH DEPTH NOTED ON P15. 10' TO 14' SPACING
ISOLATION (EXPANSION JOINT PER CALTRANS P18)
CB2 RIM 21.83
GRIT PUMP PAD
PRIMARY SLUDGE/ SCUM PUMP PAD
CONC PAD EL 22.50
SEE SECTION A ON SHEET CDC–15
4'–0" WIDE x 2'–0" DEEP CONCRETE V–DITCH, SEE DET 11 C110–4
12" BASE UNDER CONC PAVEMENT
GUARDRAIL, SEE NOTE 6
4" HIGH CONCRETE CURB
R=25'
CONCRETE PAVEMENT, SEE NOTE 5
AC JOINTS
NEW TELEPHONE PULL BOX
PG&E 12KV VAULT, SEE NOTE 2
LOWER SOIL NAIL WALL, SEE DWG C110–3
CONTRACTOR SHALL REGRADED AREA AS REQUIRE TO DIRECT DRAINAGE TOWARD V–DITCHES.
HEAVY VEGETATION THROUGHOUT HILLSIDE
PLANT ACCESS ROAD
PI, R1A N 2135737.48 E 5990691.70
PI N 2135694.37 E 5990674.06
AC PAVING
UPPER SOIL NAIL WALL, SEE DWG C110–1
CB RIM 49.50 INV 41.5
DUAL SIDE INLET CATCH BASIN, SEE (C185) PER CDC–8
PROTECT EXISTING OAK TREE
2'–0" WIDE x 1'–0" DEEP CONCRETE V–DITCH, SEE DET 11 C110–4
PI N 2135685.24 E 5990659.52
EXISTING PINE TREE (REMOVED)
EQ STRUCTURE FOOTPRINT
RETAINING WALL (RW2), SEE DETAIL 02006 ON DWG S–3
CONCRETE PAVEMENT CLSM BACK FILL TO EL 8.0 CELLCRETE BACK FILL EL 8.0 TO EL 14.0
EQ PUMP PADS
CB4 RIM. 15.17
FERRIC CHLORIDE TANK PAD
EL 29.33
EL 33.50
TEMPORARY WOODEN STAIRS PROFILE, SEE DWG C100–4
EL 25.33
EL 42.25
EL 48.08
EFFLUENT FILTERS
GM/BOARD BUILDING
CONC SLAB
OFFICE
EXISTING CHEMICAL PULL BOX, PROTECT IN PLACE
CB10 RIM 44.4
RECONSTRUCT (E) ASPHALT BERM
VALLEY GUTTER, SEE (C126)
REQUIRED 8' CLEAR @ MAX 2% SLOPE
FRONT
N 2135624.79 E 5990655.66 EL 49.75
N 2135620.12 E 5990653.87 EL 49.75
REMOVABLE GUARD POST (TYP OF 7), SEE (C942), SEE NOTE 10
CONFORM TO EXISTING PAVEMENT
PI N 2135605.39 E 5990652.13
SIDE INLET CATCH BASIN, SEE (C185) PER CDC–8
UNDERGROUND PG&E SPLICE ENCLOSURE WITH A DRAIN LINE
CB5 RIM 53.50 INV 50.0
AC PAVING
PI N 2135621.20 E 5990644.20
60"x60" TRANSFORMER PAD SEE NOTE 9
UNDERGROUND SERVICE TERMINATION PULL BOX

PLAN
1" = 10'

MATCHLINE FOR CONTINUATION SEE C100–3

RECORD DRAWING
THIS RECORD DRAWING HAS BEEN PREPARED FROM THE ORIGINAL CONTRACT DOCUMENTS SIGNED AND SEALED BY THE RESPONSIBLE ENGINEER OF RECORD. ADDITIONAL INFORMATION HAS BEEN PROVIDED BY OTHERS TO REPRESENT AS–CONSTRUCTED CONDITION AND IS SHOWN ON THESE RECORD DRAWINGS. THE RESPONSIBLE ENGINEER OF RECORD CANNOT VERIFY THE ACCURACY OF THE AS–CONSTRUCTED CONDITION INFORMATION REPRESENTED ON THE RECORD DRAWINGS.

0" 1" — VERIFY SCALES — BAR IS ONE INCH LONG ON FULL SIZE DRAWING. IF NOT ONE INCH LONG ON THIS DRAWING, ADJUST SCALES ACCORDINGLY

Woodard & Curran

REV	DATE	BY	APVD	DESCRIPTION
1	07/22	CT	TV	RECORD DRAWING

DESIGNED M. TAKEMOTO
DRAWN C. TO
CHECKED M. NAKAMOTO

SUBMITTED: MARK TAKEMOTO, RMC PROJECT ENGINEER CE-64369
APPROVED: STEVE CLARY, RMC ENGINEER CE-30318

SAUSALITO · MARIN CITY SANITARY DISTRICT

TREATMENT AND WET WEATHER FLOW UPGRADE

CIVIL
SITE GRADING AND PAVING PLAN - 1

DWG NO C100-2
SHEET NO 41 OF 226
PROJ NO 055-006
DATE JULY 2022

FILENAME: 0055-006-C100-1 8-01-22 12:13pm cto || XREFS:| X-SMCSD-TBLK | X-Topo Survey | X-Site | X-Treatment Plant site plan |<c--

Last Saved By: cto 8-01-22 10:09am

MATCHLINE FOR CONTINUATION SEE INSERT PLAN ON THE RIGHT

EFFLUENT FILTERS

12" SD. DIRECT SD TO BEACH TO THE SOUTH OF EXISTING STRUCTURE

12" SD. ABOVE GROUND CMP STORM DRAIN. CONTRACTOR TO VERIFY ALIGNMENT IN THE FIELD. PIPE SHALL BE INSTALLED IN ACCORDANCE WITH THE CONTRACT SPECIFICATIONS.

NEW STAIRCASE. REMOVE EXISTING FENCING AND VEGETATION AS REQUIRED.

<12" COVER — EXISTING PHONE, EXISTING POWER, EXISTING WATER

REPOSITION EXISTING SHED TO PROVIDE CLEARANCE FOR NEW STAIRS

SHIPPING CONTAINER (FLAMMABLE LIQUIDS)

EL ~51.3 VIF

12" SD. SEE DWG C200-1 FOR CONTINUATION

STEEL SUPPORT FRAMEWORK

SHIPPING CONTAINER

WOOD WALL (UNDER)

COVERED CONC SLAB

FENCE

PROTECT EXISTING TREE IN PLACE, TYP.

12"TREE AT DECK

AT GROUND

64.54

56.5 GND

EX. CONC. PAD EL ~61.5 VIF

CONNECT TRENCH DRAIN TO EXISTING STORM DRAIN

NEW CONCRETE CURB PER DET C120

DEMOLISH EXISTING 2' HIGH WOOD RETAINING WALL

DEMOLISH EXISTING BRICK WALKWAY

MATCH EXISTING PAVEMENT ELEVATION. NEW/EXISTING AC TRANSITION PER DET C109, TYPICAL

PROTECT EXISTING DI IN PLACE

PRE-SLOPED TRENCH DRAIN PER SECTION 02700

AC ROAD/GRAVEL TRANSITION PER DET C108, TYP

PROTECT EXISTING TREE IN PLACE, TYP.

AC ROAD/GRAVEL TRANSITION PER DET C108, TYP

CONFORM TO EXISTING

NEW AC PAVING NEXT TO EXISTING CURB PER DET C120

NEW AC PAVEMENT PER DET C107

ONE 3" AND THREE 1" ELECTRICAL AND CONTROLS CONDUITS LOCATED ALONG HILLSIDE. CONTRACTOR SHALL VERIFY LOCATION AND FUNCTION IN THE FIELD AND REROUTE AROUND NEW RETAINING WALL

SOIL NAIL WALL, SEE DWG C110-3

NEW AC PAVEMENT PER DET C107

DURING ROADWORK, INSTALL TWO (2) 1" CONDUITS AND TERMINATE IN NEW 12"x18" CHRISTY BOXES AT EACH SIDE. CONFIRM EXACT LOCATION WITH OWNER

ABANDONED AUTOMATIC GATE WIRING LOCATED IN THIS AREA. CONTRACTOR TO DEMOLISH

EL 69.25

CONCRETE STEPS WALKWAY, SEE DWG S-16

NEW AC PAVEMENT PER DET C107 SEE NOTE 1.

EXISTING ELECTRICAL BOXES PROTECT IN PLACE, ADJUST TO FINAL GRADE AS NEEDED

EL 74.25

CONCRETE CURB

EXISTING ELECTRICAL BOXES PROTECT IN PLACE, ADJUST TO FINAL GRADE AS NEEDED

MATCH EXISTING PAVEMENT ELEVATION NEW/EXISTING AC TRANSITION PER DET C109, TYPICAL

MATCH EXISTING PAVEMENT ELEVATION, NEW/EXISTING AC TRANSITION PER DET C109, TYPICAL

MATCHLINE FOR CONTINUATION SEE C100-1

MATCHLINE FOR CONTINUATION SEE C100-2

SCALE: 1"=10'

0 10 20 30

SCALE IN FEET

PLAN
1" = 10'

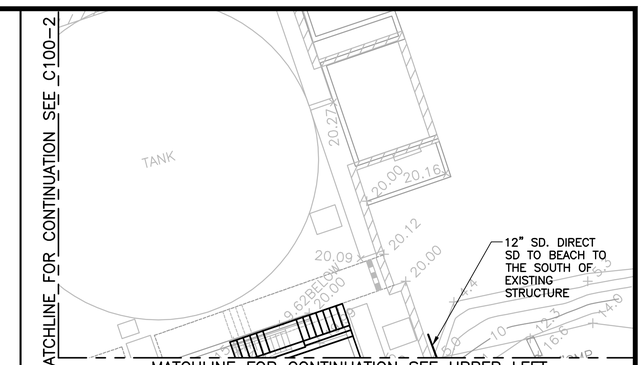

INSERT PLAN
1" = 10'

NOTES:

1. CONTRACTOR SHALL MATCH EXISTING GRADELINES UNLESS NOTED OTHERWISE.

RECORD DRAWING
THIS RECORD DRAWING HAS BEEN PREPARED FROM THE ORIGINAL CONTRACT DOCUMENTS SIGNED AND SEALED BY THE RESPONSIBLE ENGINEER OF RECORD. ADDITIONAL INFORMATION HAS BEEN PROVIDED BY OTHERS TO REPRESENT AS-CONSTRUCTED CONDITION AND IS SHOWN ON THESE RECORD DRAWINGS. THE RESPONSIBLE ENGINEER OF RECORD CANNOT VERIFY THE ACCURACY OF THE AS-CONSTRUCTED CONDITION INFORMATION REPRESENTED ON THE RECORD DRAWINGS.

0" 1" VERIFY SCALES — BAR IS ONE INCH LONG ON FULL SIZE DRAWING. IF NOT ONE INCH LONG ON THIS DRAWING, ADJUST SCALES ACCORDINGLY

Woodard & Curran

REV	DATE	BY	APVD	DESCRIPTION
1	07/22	CT	TV	RECORD DRAWING

DESIGNED M. TAKEMOTO
DRAWN C. TO
CHECKED M. NAKAMOTO

SUBMITTED: MARK TAKEMOTO, RMC PROJECT ENGINEER CE-64369
APPROVED: STEVE CLARY, RMC ENGINEER CE-30318

SAUSALITO · MARIN CITY SANITARY DISTRICT

TREATMENT AND WET WEATHER FLOW UPGRADE

CIVIL
SITE GRADING AND PAVING PLAN - 2

DWG NO C100-3
SHEET NO 42 OF 226
PROJ NO 055-006
DATE JULY 2022

FILENAME: 0055-006-C100-1 8-01-22 12:13pm cto || XREFS: X-SMCSD-TBLK | X-Topo Survey | X-Site | X-Treatment Plant site plan |<<--

Last Saved By: cto 8-01-22 10:09am

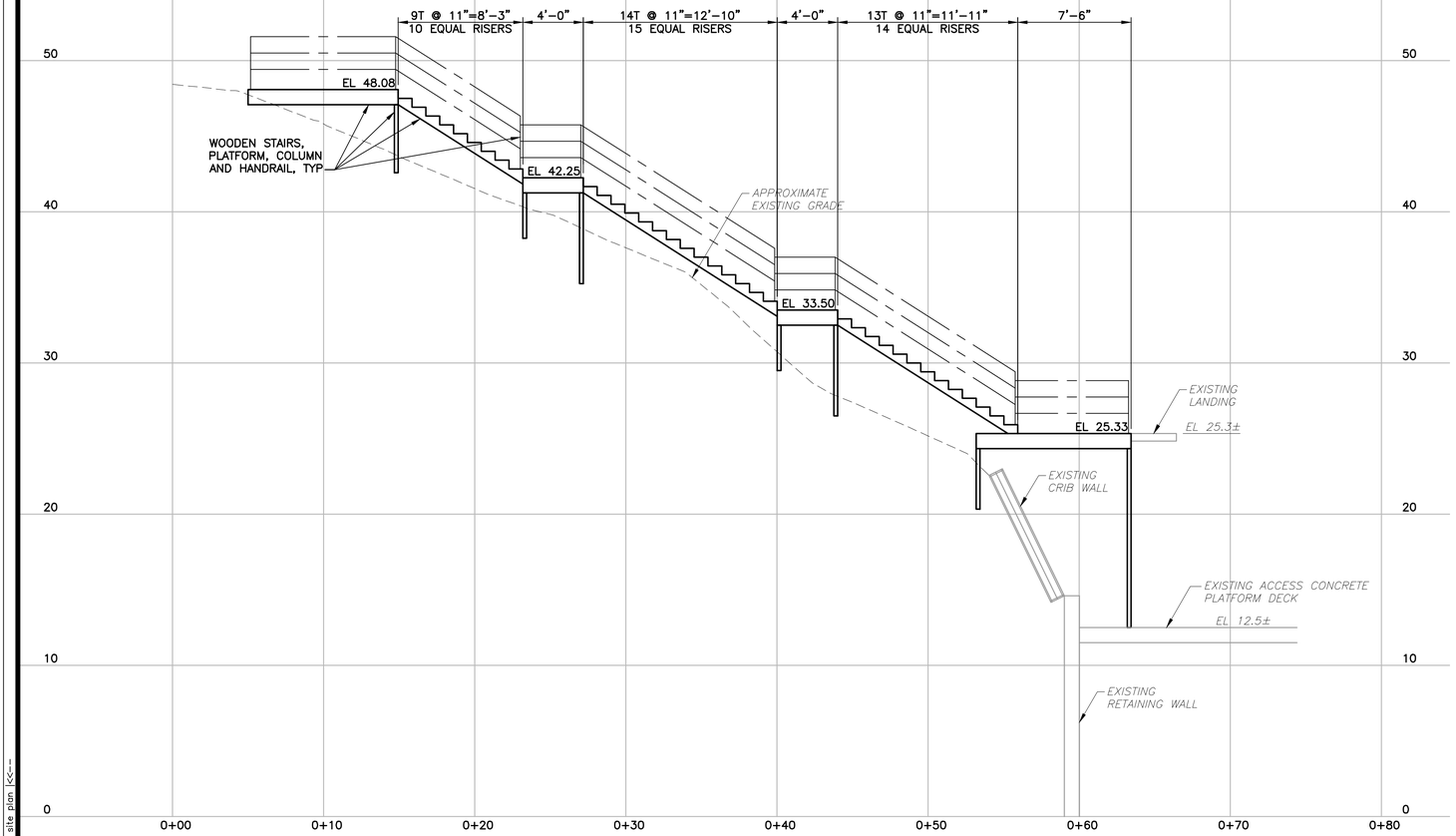

NOTES:

1. THIS DRAWING FOR TEMPORARY STAIRS IS CONCEPTUAL ONLY. THE CONTRACTOR SHALL BE RESPONSIBLE FOR EXAMINING EXISTING FIELD CONDITIONS AND THEN DESIGNING AND CONSTRUCTING TEMPORARY STAIRS TO PROVIDE GENERAL ACCESS BETWEEN THE OFFICE AND PLANT FACILITIES DURING CONSTRUCTION. THE DESIGN OF THE TEMPORARY STAIRS SHALL BE PREPARED AND STAMPED BY A STRUCTURAL ENGINEER LICENSED IN THE STATE OF CALIFORNIA AND SHALL COMPLY WITH ALL APPLICABLE CODES AND SAFETY REGULATIONS.
2. THE TEMPORARY STAIRS SHALL BE PROVIDED WITH HAND/GUARD RAILING AND LIGHTING. THE MINIMUM TREAD WIDTH SHALL BE 36".
3. THE CONTRACTOR SHALL BE RESPONSIBLE FOR REGULARLY INSPECTING AND MAINTAINING IN GOOD CONDITION THE TEMPORARY STAIRS.
4. THE CONTRACTOR SHALL COMPLETELY DEMOLISH THE TEMPORARY STAIRS ONCE PERMANENT STAIR ACCESS HAS BEEN CONSTRUCTED AND ACCEPTED BY THE ENGINEER.

TEMPORARY STAIRS PROFILE (FOR PLAN SEE DWG C100-2)

1" = 5'

FILENAME: 055-006-C100-1 8-01-22 12:13pm cto | XREFS: | X-SMCSD-TBLK | X-Topo Survey | X-Site | X-Treatment Plant site plan |<<--

Last Saved By: cto 8-01-22 10:09am

RECORD DRAWING
THIS RECORD DRAWING HAS BEEN PREPARED FROM THE ORIGINAL CONTRACT DOCUMENTS SIGNED AND SEALED BY THE RESPONSIBLE ENGINEER OF RECORD. ADDITIONAL INFORMATION HAS BEEN PROVIDED BY OTHERS TO REPRESENT AS-CONSTRUCTED CONDITION AND IS SHOWN ON THESE RECORD DRAWINGS. THE RESPONSIBLE ENGINEER OF RECORD CANNOT VERIFY THE ACCURACY OF THE AS-CONSTRUCTED CONDITION INFORMATION REPRESENTED ON THE RECORD DRAWINGS.

0" 1" — VERIFY SCALES — BAR IS ONE INCH LONG ON FULL SIZE DRAWING. IF NOT ONE INCH LONG ON THIS DRAWING, ADJUST SCALES ACCORDINGLY

Woodard & Curran

REV	DATE	BY	APVD	DESCRIPTION
1	07/22	CT	TV	RECORD DRAWING

DESIGNED M. TAKEMOTO
DRAWN C. TO
CHECKED M. NAKAMOTO

SUBMITTED: MARK TAKEMOTO, RMC PROJECT ENGINEER CE-64369
APPROVED: STEVE CLARY, RMC ENGINEER CE-30318

SAUSALITO · MARIN CITY SANITARY DISTRICT

TREATMENT AND WET WEATHER FLOW UPGRADE

CIVIL
TEMPORARY STAIRS

DWG NO C100-4
SHEET NO 43 OF 226
PROJ NO 055-006
DATE JULY 2022

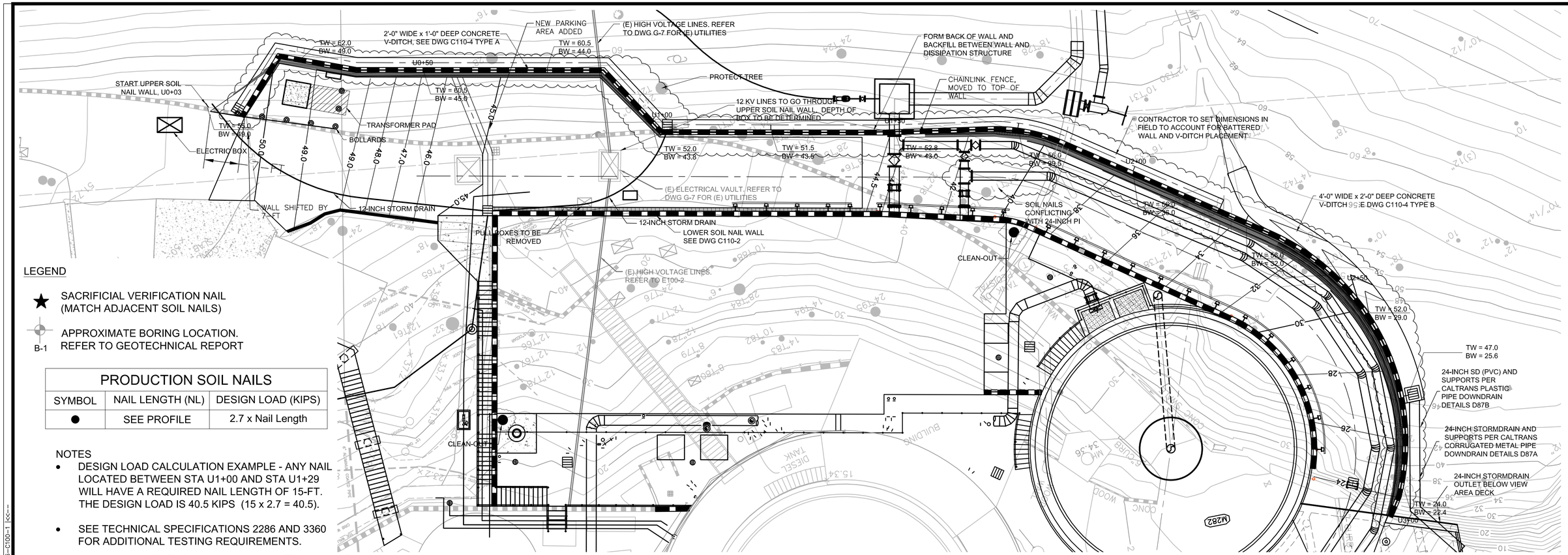

LEGEND

★ SACRIFICIAL VERIFICATION NAIL (MATCH ADJACENT SOIL NAILS)

B-1 APPROXIMATE BORING LOCATION. REFER TO GEOTECHNICAL REPORT

PRODUCTION SOIL NAILS		
SYMBOL	NAIL LENGTH (NL)	DESIGN LOAD (KIPS)
●	SEE PROFILE	2.7 x Nail Length

NOTES

- DESIGN LOAD CALCULATION EXAMPLE - ANY NAIL LOCATED BETWEEN STA U1+00 AND STA U1+29 WILL HAVE A REQUIRED NAIL LENGTH OF 15-FT. THE DESIGN LOAD IS 40.5 KIPS (15 x 2.7 = 40.5).
- SEE TECHNICAL SPECIFICATIONS 2286 AND 3360 FOR ADDITIONAL TESTING REQUIREMENTS.

SCALE: 1"=10'
0 10 20 30
SCALE IN FEET

PLAN
SCALE: 1"=10'

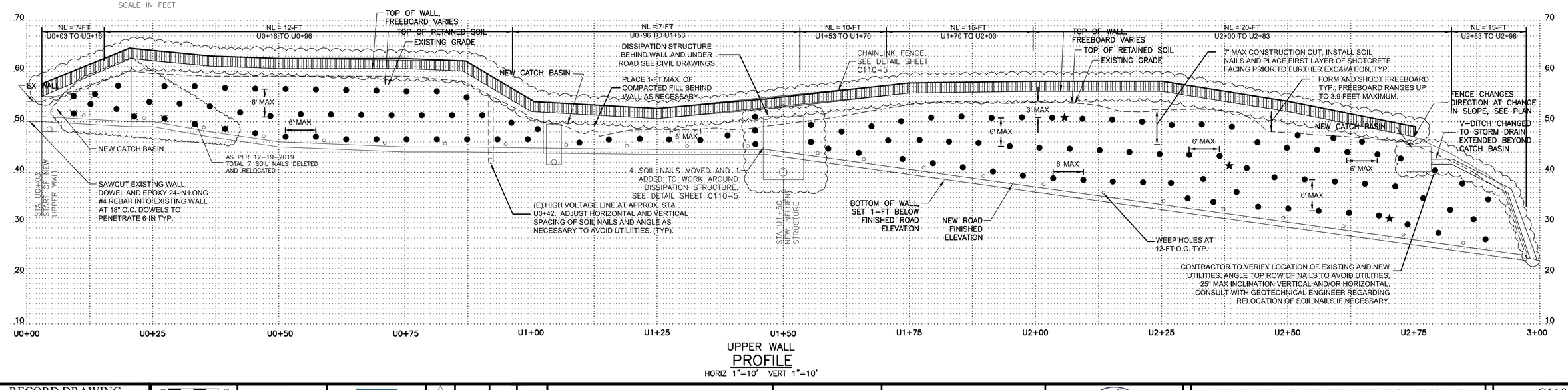

UPPER WALL
PROFILE
HORIZ 1"=10' VERT 1"=10'

RECORD DRAWING
THIS RECORD DRAWING HAS BEEN PREPARED FROM THE ORIGINAL CONTRACT DOCUMENTS SIGNED AND SEALED BY THE RESPONSIBLE ENGINEER OF RECORD. ADDITIONAL INFORMATION HAS BEEN PROVIDED BY OTHERS TO REPRESENT AS-CONSTRUCTED CONDITION AND IS SHOWN ON THESE RECORD DRAWINGS. THE RESPONSIBLE ENGINEER OF RECORD CANNOT VERIFY THE ACCURACY OF THE AS-CONSTRUCTED CONDITION INFORMATION REPRESENTED ON THE RECORD DRAWINGS.

0" 1" VERIFY SCALES — BAR IS ONE INCH LONG ON FULL SIZE DRAWING. IF NOT ONE INCH LONG ON THIS DRAWING, ADJUST SCALES ACCORDINGLY

REV	DATE	BY	APVD	DESCRIPTION
1	07/22	CT	TV	RECORD DRAWING

DESIGNED R. AREND
DRAWN R. AREND
CHECKED S. STEPHENS

SUBMITTED: MARK TAKEMOTO, RMC PROJECT ENGINEER CE-64369
APPROVED: STEVE CLARY, RMC ENGINEER CE-30318

SAUSALITO · MARIN CITY SANITARY DISTRICT

TREATMENT AND WET WEATHER FLOW UPGRADE

GEOTECHNICAL
SOIL NAIL UPPER WALL PROFILES

DWG NO C110-1
SHEET NO 44 OF 226
PROJ NO 055-006
DATE JULY 2022

FILENAME: C110-1 8-01-22 10:58am cto || XREFS: X-SMCSD-TBLK | X-Topo Survey | X-Treatment Plant site plan | 286F_E100-2 | 0055-006-C100-1 |<<--

Last Saved By: cto 7-14-22 04:19pm

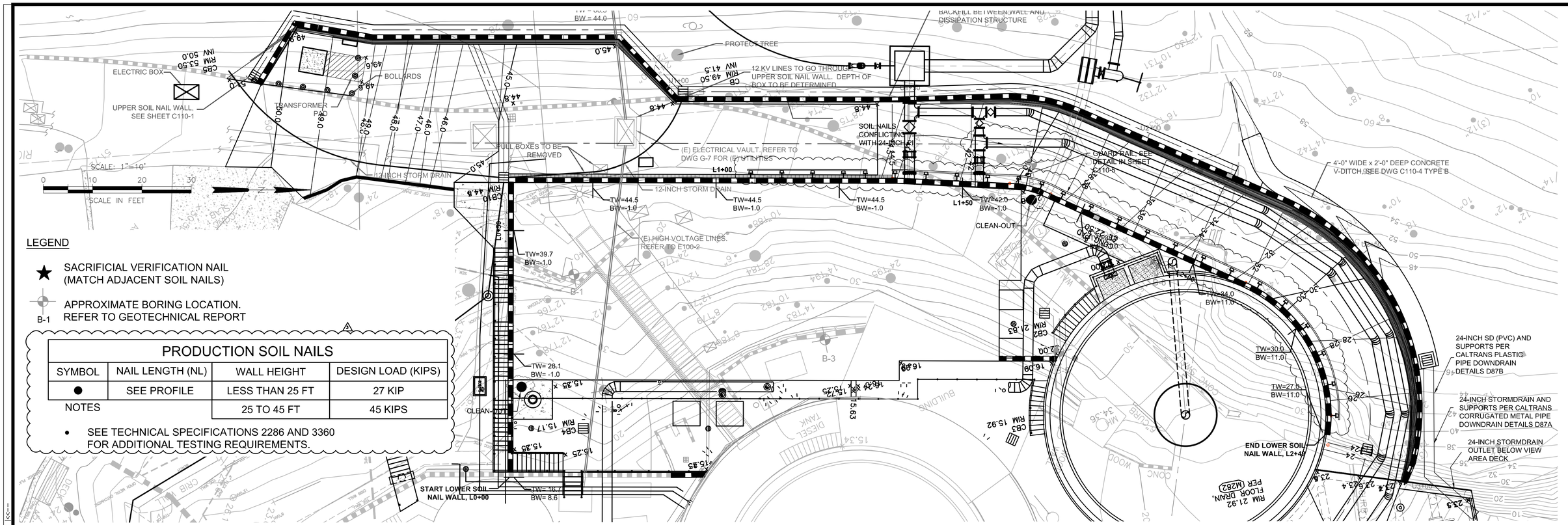

LEGEND

★ SACRIFICIAL VERIFICATION NAIL (MATCH ADJACENT SOIL NAILS)

B-1 APPROXIMATE BORING LOCATION. REFER TO GEOTECHNICAL REPORT

PRODUCTION SOIL NAILS			
SYMBOL	NAIL LENGTH (NL)	WALL HEIGHT	DESIGN LOAD (KIPS)
●	SEE PROFILE	LESS THAN 25 FT	27 KIP
NOTES		25 TO 45 FT	45 KIPS

- SEE TECHNICAL SPECIFICATIONS 2286 AND 3360 FOR ADDITIONAL TESTING REQUIREMENTS.

PLAN
SCALE: 1"=10'

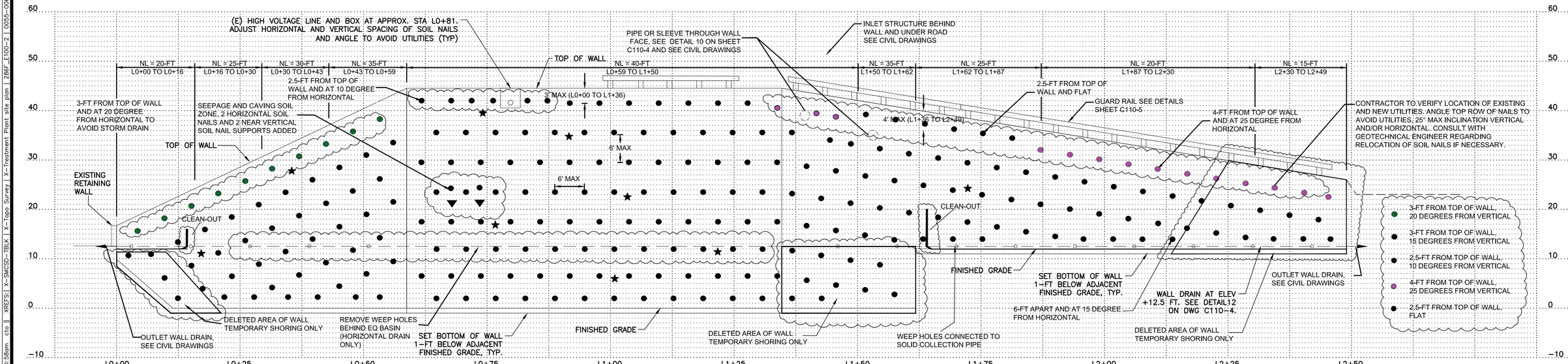

LOWER WALL PROFILE
HORIZ 1"=10' VERT 1"=10'

RECORD DRAWING
THIS RECORD DRAWING HAS BEEN PREPARED FROM THE ORIGINAL CONTRACT DOCUMENTS SIGNED AND SEALED BY THE RESPONSIBLE ENGINEER OF RECORD. ADDITIONAL INFORMATION HAS BEEN PROVIDED BY OTHERS TO REPRESENT AS-CONSTRUCTED CONDITION AND IS SHOWN ON THESE RECORD DRAWINGS. THE RESPONSIBLE ENGINEER OF RECORD CANNOT VERIFY THE ACCURACY OF THE AS-CONSTRUCTED CONDITION INFORMATION REPRESENTED ON THE RECORD DRAWINGS.

0" — 1" — VERIFY SCALES — BAR IS ONE INCH LONG ON FULL SIZE DRAWING. IF NOT ONE INCH LONG ON THIS DRAWING, ADJUST SCALES ACCORDINGLY

REV	DATE	BY	APVD	DESCRIPTION
1	07/22	CT	TV	RECORD DRAWING

DESIGNED	R. AREND
DRAWN	R. AREND
CHECKED	S. STEPHENS

SUBMITTED: MARK TAKEMOTO, RMC PROJECT ENGINEER CE-64369

APPROVED: STEVE CLARY, RMC ENGINEER CE-30318

TREATMENT AND WET WEATHER FLOW UPGRADE

GEOTECHNICAL SOIL NAIL LOWER WALL PROFILES

DWG NO	C110-2
SHEET NO	45 OF 226
PROJ NO	055-006
DATE	JULY 2022

FILENAME: C110-2 | 8-01-22 10:58am cto | XREFS: X-SMCSD-TBLK | X-Topo Survey | X-Treatment Plant site plan | 286F_E100-2 | 0055-006-C100-1 |<<--

Last Saved By: cto 7-14-22 04:10pm

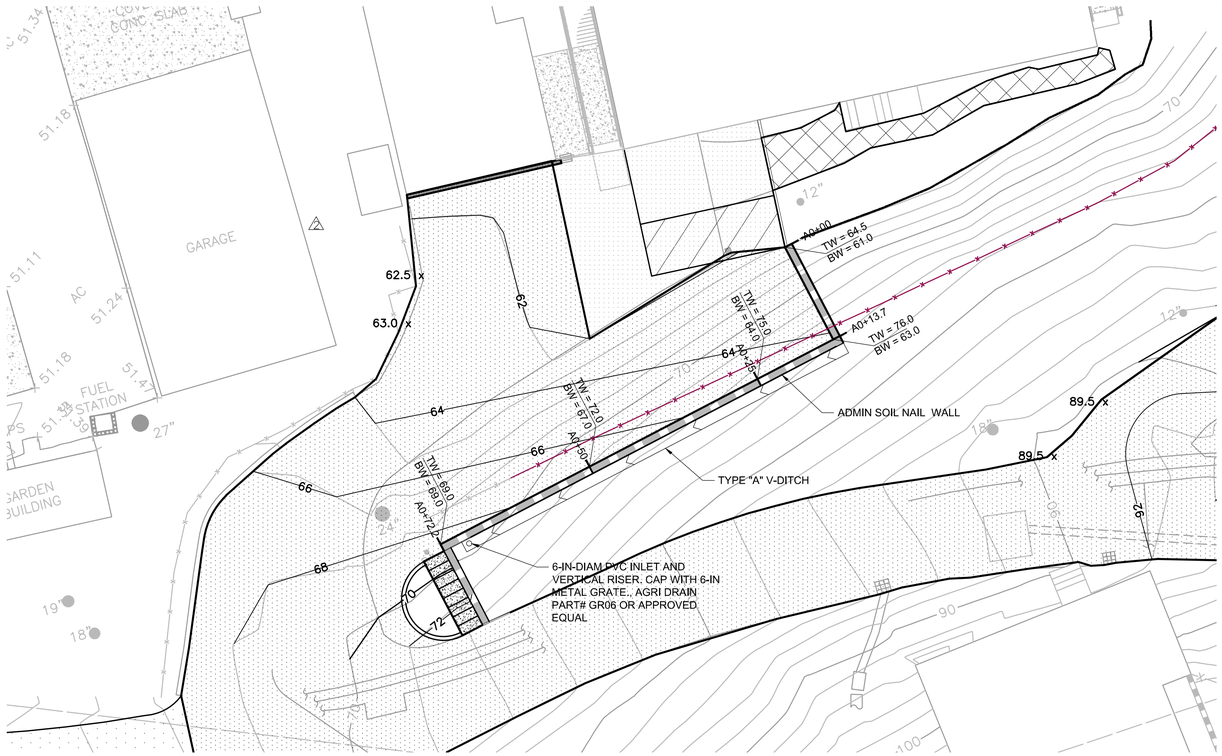

PLAN
1" = 10'

LEGEND

★ SACRIFICIAL VERIFICATION NAIL (MATCH ADJACENT SOIL NAILS)

PRODUCTION SOIL NAILS		
SYMBOL	NAIL LENGTH (NL)	DESIGN LOAD (KIPS)
●	SEE PROFILE	0.8 x Nail Length

NOTES

- DESIGN LOAD CALCULATION EXAMPLE - ANY NAIL LOCATED BETWEEN STA A0+10 AND STA A0+55 WILL HAVE A REQUIRED NAIL LENGTH OF 15-FT. THE DESIGN LOAD IS 12 KIPS (15 x 0.8 = 12).
- SEE TECHNICAL SPECIFICATIONS 2286 AND 3360 FOR ADDITIONAL TESTING REQUIREMENTS.

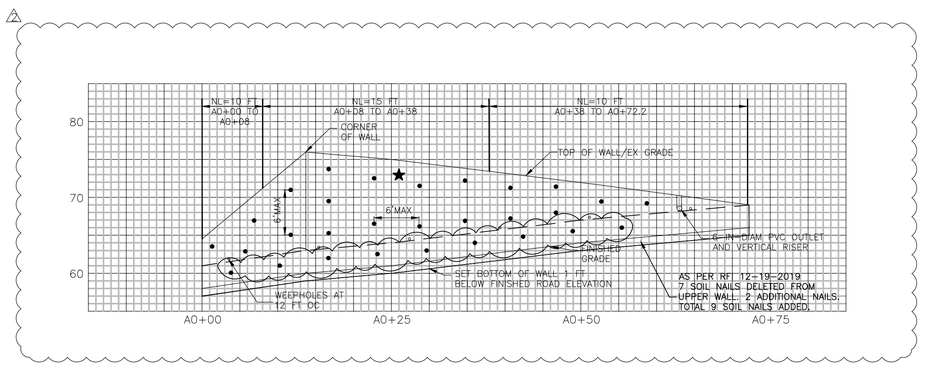

ADMIN RETAINING WALL
PROFILE
HORIZ 1"=10' VERT 1"=10'

RECORD DRAWING
THIS RECORD DRAWING HAS BEEN PREPARED FROM THE ORIGINAL CONTRACT DOCUMENTS SIGNED AND SEALED BY THE RESPONSIBLE ENGINEER OF RECORD. ADDITIONAL INFORMATION HAS BEEN PROVIDED BY OTHERS TO REPRESENT AS-CONSTRUCTED CONDITION AND IS SHOWN ON THESE RECORD DRAWINGS. THE RESPONSIBLE ENGINEER OF RECORD CANNOT VERIFY THE ACCURACY OF THE AS-CONSTRUCTED CONDITION INFORMATION REPRESENTED ON THE RECORD DRAWINGS.

0" — 1" — VERIFY SCALES — BAR IS ONE INCH LONG ON FULL SIZE DRAWING. IF NOT ONE INCH LONG ON THIS DRAWING, ADJUST SCALES ACCORDINGLY

REV	DATE	BY	APVD	DESCRIPTION
1	07/22	CT	TV	RECORD DRAWING

DESIGNED S. STEPHENS
DRAWN R. AREND
CHECKED S. STEPHENS

SUBMITTED: MARK TAKEMOTO, RMC PROJECT ENGINEER CE-64369
APPROVED: STEVE CLARY, RMC ENGINEER CE-30318

SAUSALITO · MARIN CITY SANITARY DISTRICT

TREATMENT AND WET WEATHER FLOW UPGRADE

GEOTECHNICAL
SOIL NAIL ADMIN WALL PROFILE

DWG NO C110-3
SHEET NO 46 OF 226
PROJ NO 055-006
DATE JULY 2022

FILENAME: C110-3 8-01-22 11:04am cto || XREFS:| X-SMCSD-TBLK | X-Topo Survey | X-Site | X-Treatment Plant site plan | 286F_E100-2 |<<--

Last Saved By: cto 8-01-22 11:03am

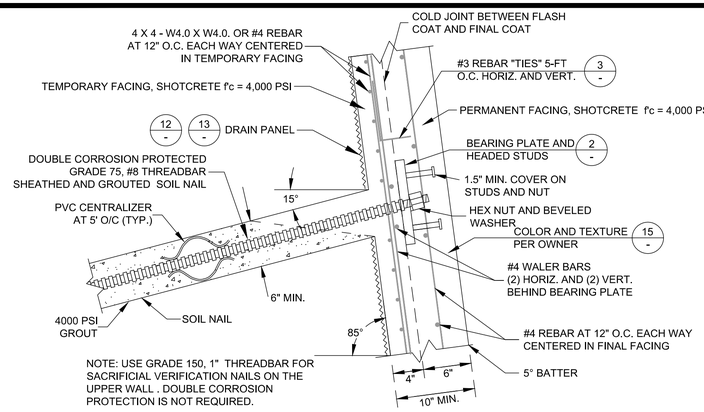

1 - NAIL DETAIL
(NOT TO SCALE)

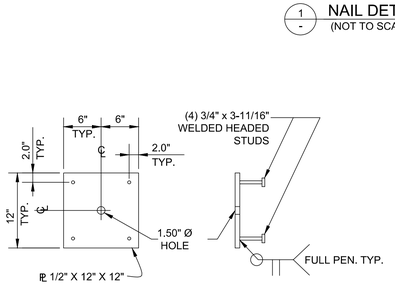

2 - BEARING PLATE DETAIL
(NOT TO SCALE)

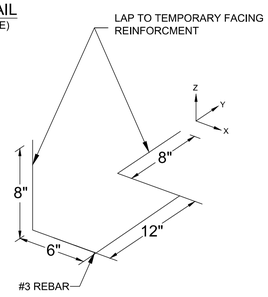

3 - REBAR HOOK "TIES"
(NOT TO SCALE)

UPPER SOIL NAIL WALL

SHEET C110-1

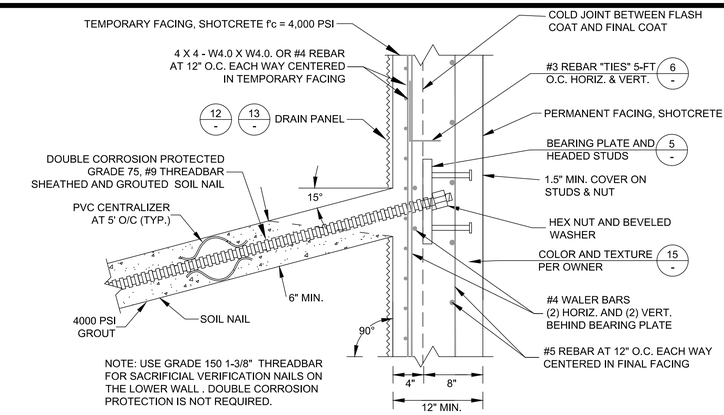

4 - NAIL DETAIL
(NOT TO SCALE)

NOTES:
(1) EPOXY COATED STEEL BELOW EL. 15
(2) REFER TO DETAIL XX ON DRAWING XX FOR LOWER WALL FACING BELOW GUARD RAIL (FROM L1+36 TO L2+49)

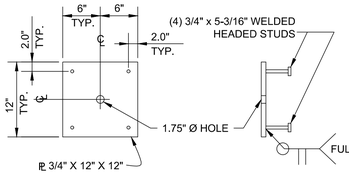

5 - BEARING PLATE DETAIL
(NOT TO SCALE)

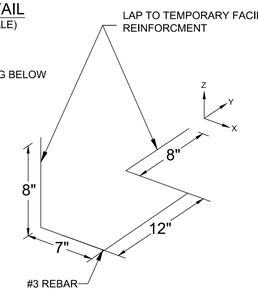

6 - REBAR HOOK "TIES"
(NOT TO SCALE)

LOWER SOIL NAIL WALL

SHEET C110-2

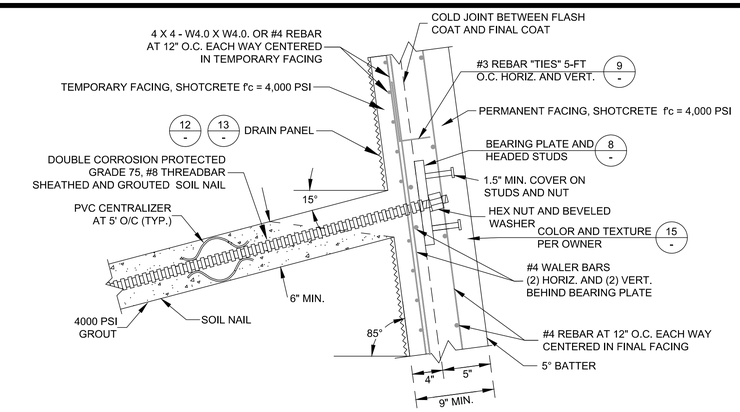

7 - NAIL DETAIL
(NOT TO SCALE)

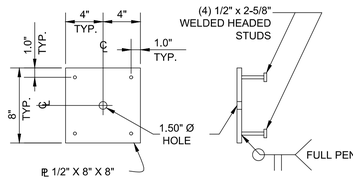

8 - BEARING PLATE DETAIL
(NOT TO SCALE)

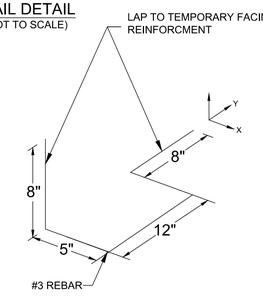

9 - REBAR HOOK "TIES"
(NOT TO SCALE)

ADMIN SOIL NAIL WALL

SHEET C110-3

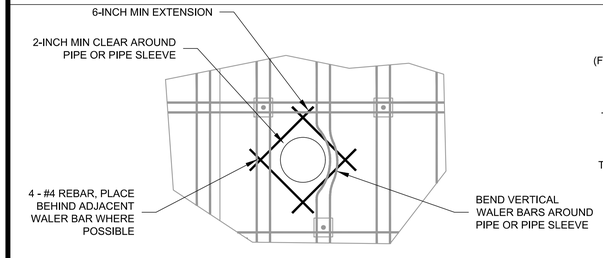

10 - PIPE / PIPE SLEEVE REINFORCEMENT
(NOT TO SCALE)

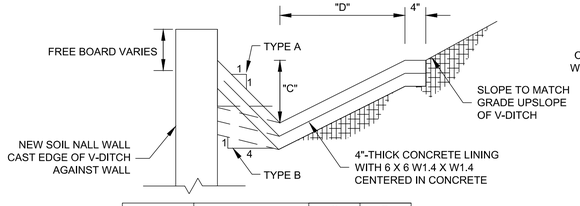

		C	D
TYPE A	2'0"-WIDE X 1'0"-DEEP	12"	12" MIN
TYPE B	4'0"-WIDE X 2'0"-DEEP	24"	24" MIN

11 - CONCRETE V-DITCH DETAIL
(NOT TO SCALE)

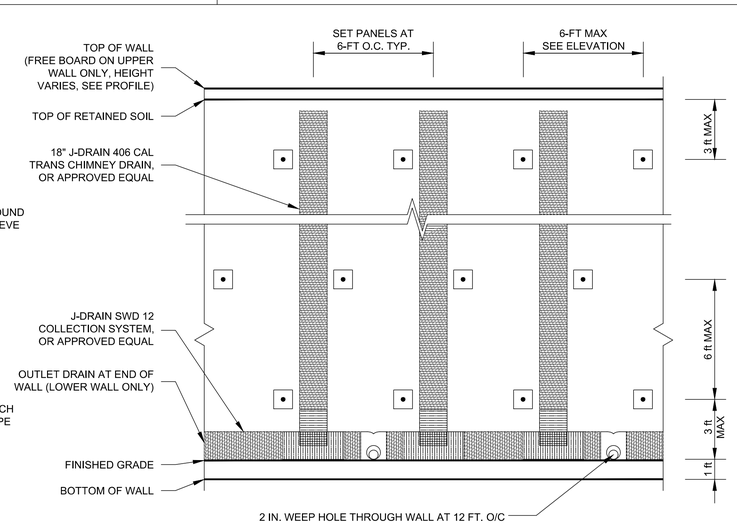

12 - PARTIAL ELEVATION
(NOT TO SCALE)

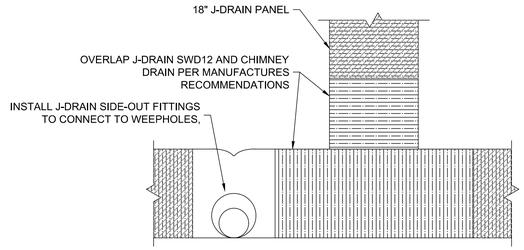

13 - DRAINAGE DETAIL
(NOT TO SCALE)

MINIMUM BAR LAPS FOR REINFORCING STEEL (STAGGER SPLICES A MINIMUM OF 24 INCHES)		
SIZE	f'c = 4,000 psi	f'c = 5,000 psi
#3	19"	17"
#4	25"	23"
#5	31"	28"

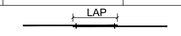

14 - LAP LENGTHS DETAIL
(NOT TO SCALE)

RECORD DRAWING
THIS RECORD DRAWING HAS BEEN PREPARED FROM THE ORIGINAL CONTRACT DOCUMENTS SIGNED AND SEALED BY THE RESPONSIBLE ENGINEER OF RECORD. ADDITIONAL INFORMATION HAS BEEN PROVIDED BY OTHERS TO REPRESENT AS-CONSTRUCTED CONDITION AND IS SHOWN ON THESE RECORD DRAWINGS. THE RESPONSIBLE ENGINEER OF RECORD CANNOT VERIFY THE ACCURACY OF THE AS-CONSTRUCTED CONDITION INFORMATION REPRESENTED ON THE RECORD DRAWINGS.

0" — 1" VERIFY SCALES — BAR IS ONE INCH LONG ON FULL SIZE DRAWING. IF NOT ONE INCH LONG ON THIS DRAWING, ADJUST SCALES ACCORDINGLY

MPEG

REV	DATE	BY	APVD	DESCRIPTION
1	07/22	CT	TV	RECORD DRAWING

DESIGNED	R. AREND
DRAWN	R. AREND
CHECKED	S. STEPHENS

SUBMITTED: MARK TAKEMOTO, RMC PROJECT ENGINEER CE-64369

APPROVED: STEVE CLARY, RMC ENGINEER CE-30318

SAUSALITO · MARIN CITY SANITARY DISTRICT

TREATMENT AND WET WEATHER FLOW UPGRADE

GEOTECHNICAL
SOIL NAIL WALL DETAILS

DWG NO	C110-4
SHEET NO	47 OF 226
PROJ NO	055-006
DATE	JULY 2022

FILENAME: C110-4 8-01-22 10:59am cto || XREFS: X-Site | X-SMCSD-TBLK <<--

Last Saved By: cto 7-14-22 04:02pm

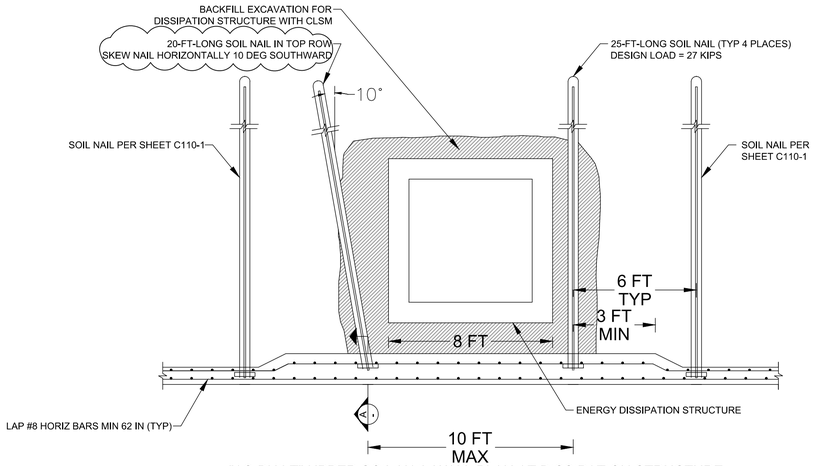

"AS-BUILT" UPPER SOIL NAIL WALL PLAN AT DISSIPATION STRUCTURE

(NO SCALE)

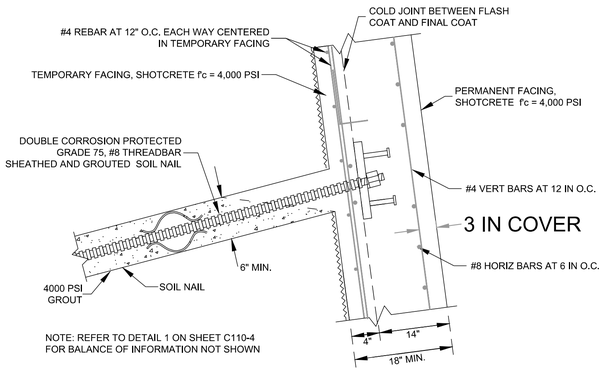

NAIL AND FACING DETAIL AT DISSIPATION STRUCTURE

(NOT TO SCALE)

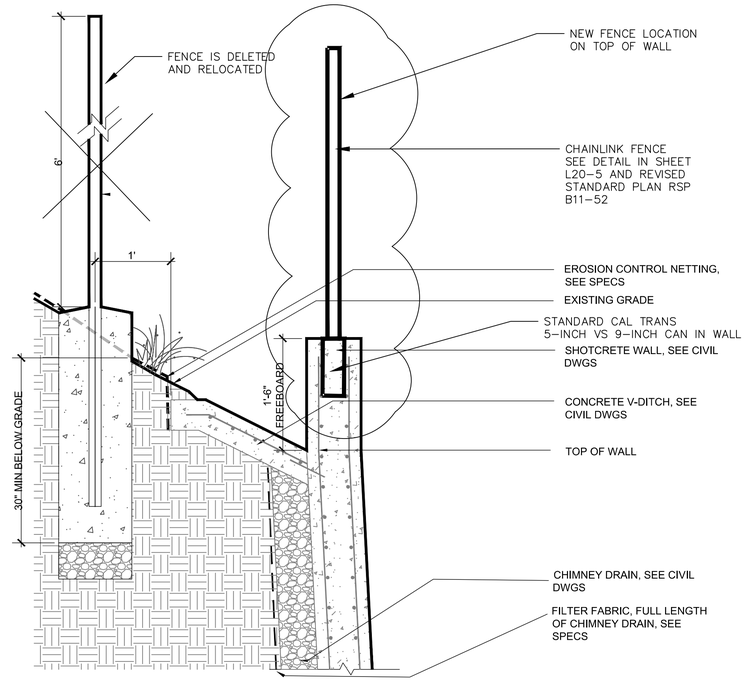

CONCRETE V-DITCH WITH RELOCATED FENCE SECTION

1" = 1'-0"

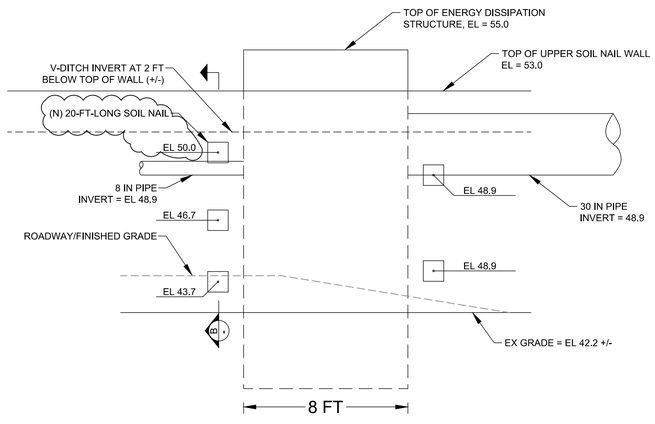

"AS-BUILT" UPPER SOIL NAIL WALL ELEVATION AT DISSIPATION STRUCTURE

(NO SCALE)

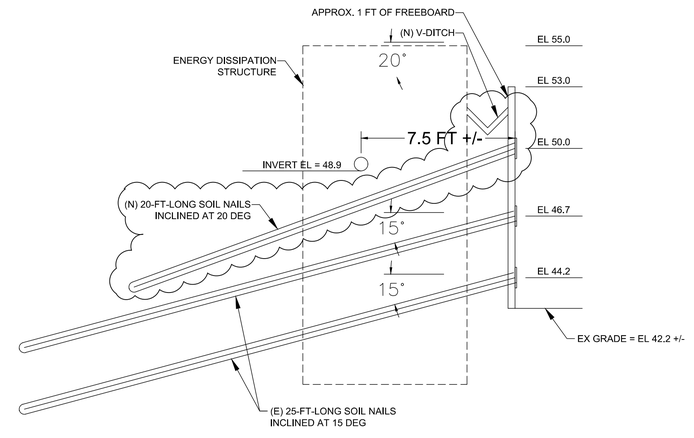

WALL SECTION SOUTH OF DISSIPATION STRUCTURE

(NOT TO SCALE)

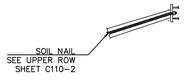

LOWER WALL SECTION AT GUARD RAIL

1.0' = 2.0'

RECORD DRAWING
THIS RECORD DRAWING HAS BEEN PREPARED FROM THE ORIGINAL CONTRACT DOCUMENTS SIGNED AND SEALED BY THE RESPONSIBLE ENGINEER OF RECORD. ADDITIONAL INFORMATION HAS BEEN PROVIDED BY OTHERS TO REPRESENT AS-CONSTRUCTED CONDITION AND IS SHOWN ON THESE RECORD DRAWINGS. THE RESPONSIBLE ENGINEER OF RECORD CANNOT VERIFY THE ACCURACY OF THE AS-CONSTRUCTED CONDITION INFORMATION REPRESENTED ON THE RECORD DRAWINGS.

0" 1" VERIFY SCALES BAR IS ONE INCH LONG ON FULL SIZE DRAWING. IF NOT ONE INCH LONG ON THIS DRAWING, ADJUST SCALES ACCORDINGLY

REV	DATE	BY	APVD	DESCRIPTION
1	07/22	CT	TV	RECORD DRAWING

DESIGNED	R. AREND
DRAWN	R. AREND
CHECKED	S. STEPHENS

SUBMITTED: MARK TAKEMOTO, RMC PROJECT ENGINEER CE-64369

APPROVED: STEVE CLARY, RMC ENGINEER CE-30318

TREATMENT AND WET WEATHER FLOW UPGRADE

GEOTECHNICAL SOIL NAIL WALL DETAILS

DWG NO	C110-5
SHEET NO	47A OF 226
PROJ NO	055-006
DATE	JULY 2022

FILENAME: C110-4 8-01-22 10:59am cto || XREFS: || X-Site | X-SMCSD-TBLK |<<--

Last Saved By: cto 7-14-22 04:02pm

SCALE: 1"=10'

0 10 20 30

SCALE IN FEET

4" SD (DRAIN TO BAY) SEE NOTE 2

FOR 20" PI CONNECTION TO EXISTING, SEE DET 2 C-9

20" FM (CAST IRON)

20" PI BYPASS

20" PI TO PC NO. 1

6" SD THROUGH DECK. 6" SD SHALL TERMINATE FLUSH WITH BOTTOM OF DECK

VIEWING AREA, SEE DWG S030-1

24" SD OUTLET, BELOW VIEW AREA DECK
N 2135837.22
E 5990787.91
INV 12.0

24" SD (CMP) AND SUPPORTS PER CALTRANS CORRUGATED METAL PIPE DOWNDRAIN DETAILS D87A

24" SD (PVC) AND SUPPORTS PER CALTRANS PLASTIC PIPE DOWNDRAIN DETAILS D87B

8" SD, SEE NOTE 7

8"x36" FIBERGLASS STOP GATE, SEE NOTE 8

4" CONC CURB FROM END OF SOIL NAIL WALL BEJS, SEE NOTE 9

PRIMARY CLARIFIER NO 2

EXISTING PRIMARY CLARIFIER NO. 1

NOTE: CONNECT TO EXISTING 4" S FROM SUMP PUMP

NOTE: CONNECT 6" R TO EXISTING RETURN PUMP STATION DISCHARGE. SEE DWG M500-1

CONNECT 6" D AND 4"S TO EXISTING RETURN PUMP STATION. SEE DWG M500-1

SEE DWG M300-1 FOR CONTINUATION

CONNECT 4" PS/SCUM LINE TO EXISTING 6" PS

16" PE

CONNECT 3/4" FOS AND 1" FOR AND 6" CONTAINMENT PIPE TO EXISTING FOS AND CONTAINMENT PIPE AND CONTAINMENT PIPE

SEE DWG M400-1 FOR CONTINUATION

EFFLUENT FILTERS

4" SECONDARY SLUDGE

6" BW

6" THICKENER OVERFLOW

24" PE FOR PROFILE, SEE DWG C200-3

12" SD, SEE DWG C100-3 FOR CONTINUATION

4" SD (DRAIN TO BAY) SEE NOTE 3

ACCESS BELOW PLATFORM. ACCESS WILL REQUIRE THE USE OF A LADDER AND MAY ONLY BE AVAILABLE DURING LOW TIDE CONDITIONS.

RETAINING WALL, TYP

ELECTRICAL, INSTRUMENTATION AND COMMUNICATION CONDUITS, SEE E100-2.

12" SD, SEE NOTE 6

6" SD

4" S

6" R

4" D

4" FD

4" 3W

2" 1W

4" S

6" R

4" D

4" FD

6" BW

4" PS/SCUM

6" D

2" 1W

6" D

4" 3W

4" D

6" SD

6" R

6" BW

10" EQR

EQ PUMP PADS

10" EQS

EQ STRUCTURE

FERRIC CHLORIDE TANK PAD

GRIT PUMP PADS

4" FD

4" D

4" PS/SCUM

24" PE FOR PROFILE, SEE DWG C200-3

PS/SCUM PAD, SEE M210-1

20" HDPE FLANGE ADAPTER, SEE C231

FLEXIBLE COUPLING ADAPTER

20" PI

6" PS

6" D

20" PI FOR PROFILE, SEE DWG C200-2

18" INF FOR PROFILE, SEE DWG C200-2

4" FD

20" TEE

20"x18" REDUCER

24" HDPE FLANGE ADAPTER, SEE C231

8" FORT BAKER FORCE MAIN EXTENSION FOR PROFILE SEE DWG C200-3

PROTECT TREES IN ACCORDANCE WITH L10-3

HEAVY VEGETATION THROUGHOUT HILLSIDE

INFLUENT SEWER TEMPORARY BYPASS DETAILS SEE DWG C200-4

(HW-PVLV18-02) 18" PLUG VALVE AND VALVE BOX, SEE C282

18" TEE P5

(HW-PVLV18-01) 18" PLUG VALVE AND VALVE BOX, SEE C282

ENERGY DISSIPATION STRUCTURE, SEE DET 1 C-9

24"x18" TEE P4

8" PLUG VALVE AND VALVE BOX, SEE C282

28" PI FOR PROFILE, SEE DWG C200-2

(HW-PVLV24-01) 24" PLUG VALVE AND VALVE BOX, SEE C282

8"x8"x4" WYE, 4" 45° ELBOW AND 4" CLEAN OUT, SEE DET 1 C-9

CAUTION! EXISTING UNDERGROUND 4" PG&E PRIMARY DUCT 3'± COVER, NO ENCASEMENT (HIGH VOLTAGE)

EXISTING PG&E HIGH VOLTAGE PULL BOX, SEE DWG E100-2

TELEPHONE LINE

4" SEWER

STORM DRAIN CLEANOUT

12" SD

CONNECT EXISTING 4" SEWER TO NEW 4" SEWER LINE

12" SD

RELOCATED PG&E TRANSFORMER. SEE DWG E24

12" SD

VALVE BOX WITH BALL VALVES

PRV'S IN A VALVE BOX ON THE HILLSIDE ABOVE THE ISOLATION VALVE

4" DIGESTER SLUDGE (ABANDONED)
4" RECLAIMED WATER (ABANDONED)
2 1/2" RECLAIMED WATER (ABANDONED)

(2) 2" 1W

PLAN
1" = 10'

NOTES:

1. ONLY FOOTPRINT OF HEADWORKS/EQ STRUCTURE SHOWN FOR CLARITY. SEE DRAWING M100-1 FOR ABOVE GRADE DETAILS.
2. ROUTE STORM DRAINAGE FROM BEHIND SOIL NAIL WALL TO BAY. BOTTOM WALL CONNECTION ELEVATION IS EL. 11.0. SEE DRAWING C110-2.
3. ROUTE STORM DRAINAGE FROM BEHIND SOIL NAIL WALL TO BAY. BOTTOM WALL CONNECTION ELEVATION IS EL. 8.0. SEE DRAWING C110-2.
4. CONTRACTOR SHALL VERIFY LOCATION OF AND CONNECTION REQUIREMENTS FOR EXISTING UTILITIES IN THE FIELD.
5. THE CONSTRUCTION OF THE ENERGY DISSIPATION BOX MAY REQUIRE ADDITIONAL SHORING AND EXCAVATION. THE CONTRACTOR SHALL DEVELOP AND SUBMIT A PLAN FOR CONSTRUCTION OF THE NEW ENERGY DISSIPATION STRUCTURE TO THE CONSTRUCTION MANAGER FOR REVIEW AND APPROVAL.
6. CONTRACTOR SHALL FIELD ROUTE NEW GRAVITY 12" SD TO THE SOUTH OF THE EXISTING STRUCTURE TO MINIMIZE DAMAGE AND REMOVAL OF EXISTING TREES. TREES REQUIRING REMOVAL SHALL BE APPROVED BY THE CONSTRUCTION MANAGER PRIOR TO REMOVAL. PIPE SHALL BE INSTALLED WITH A MINIMUM OF 24 INCHES OF COVER ALONG HILLSIDE.
7. ROUTE 8" STORM DRAIN UNDER VIEWING AREA DECK TO BAY. OUTLET SHALL TERMINATE AT EL 12.0.
8. MAXIMUM VERTICAL DISTANCE FROM CB RIM TO GATE HANDLE SHALL BE 8". VERIFY GATE AND FRAME HEIGHT AGAINST CB GRATE AND SUPPORTS DETAILS AND ADJUST GATE/FRAME HEIGHTS AS REQUIRED TO PREVENT CONFLICTS. PROVIDE TYPE 316 SS MOUNTING FRAME AND HARDWARE.
9. CAST 4" CURB MONOLITHIC WITH CONCRETE ROADWAY SIM TO C124. ALIGN CURB FLOW LINE WITH FLOW LINE OF UPHILL ROAD/GUARDRAIL FOUNDATION INTERFACE.

RECORD DRAWING
THIS RECORD DRAWING HAS BEEN PREPARED FROM THE ORIGINAL CONTRACT DOCUMENTS SIGNED AND SEALED BY THE RESPONSIBLE ENGINEER OF RECORD. ADDITIONAL INFORMATION HAS BEEN PROVIDED BY OTHERS TO REPRESENT AS-CONSTRUCTED CONDITION AND IS SHOWN ON THESE RECORD DRAWINGS. THE RESPONSIBLE ENGINEER OF RECORD CANNOT VERIFY THE ACCURACY OF THE AS-CONSTRUCTED CONDITION INFORMATION REPRESENTED ON THE RECORD DRAWINGS.

0" 1" — VERIFY SCALES — BAR IS ONE INCH LONG ON FULL SIZE DRAWING. IF NOT ONE INCH LONG ON THIS DRAWING, ADJUST SCALES ACCORDINGLY

Woodard & Curran

REV	DATE	BY	APVD	DESCRIPTION
1	07/22	CT	TV	RECORD DRAWING

DESIGNED	M. TAKEMOTO
DRAWN	C. TO
CHECKED	M. NAKAMOTO

SUBMITTED: MARK TAKEMOTO, RMC PROJECT ENGINEER CE-64369

APPROVED: STEVE CLARY, RMC ENGINEER CE-30318

SAUSALITO · MARIN CITY SANITARY DISTRICT

TREATMENT AND WET WEATHER FLOW UPGRADE

CIVIL
YARD PIPING PLAN

DWG NO	C200-1
SHEET NO	48 OF 226
PROJ NO	055-006
DATE	JULY 2022

FILENAME: 055-006-C100-1 8-01-22 12:13pm cto || XREFS: | X-SMCSD-TBLK | X-Topo Survey | X-Site | X-Treatment Plant site plan |<<--

Last Saved By: cto 8-01-22 10:09am

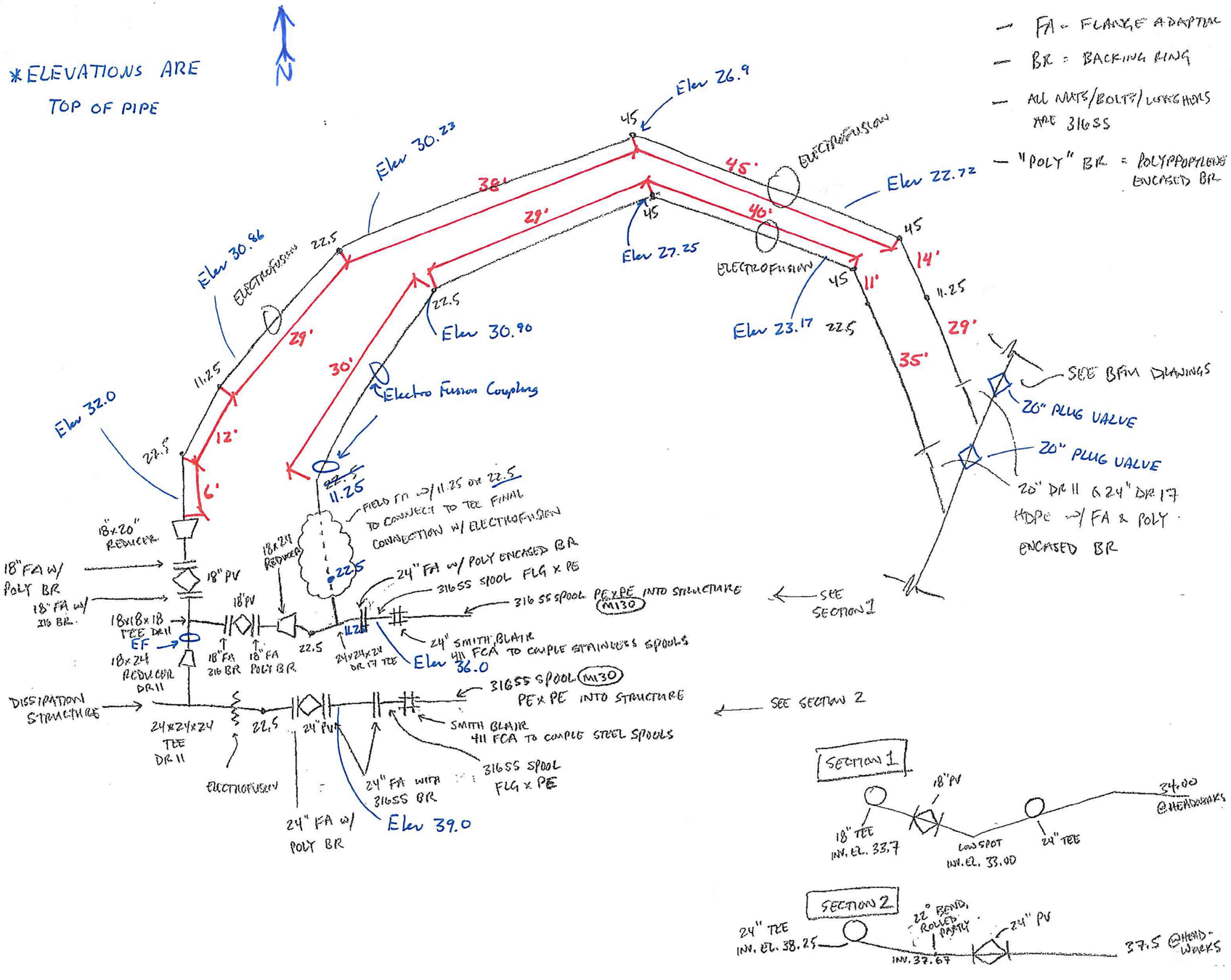

PRIMARY INFLUENT YARD PIPING PLAN



PRIMARY INFLUENT CONNECTION TO EXISTING

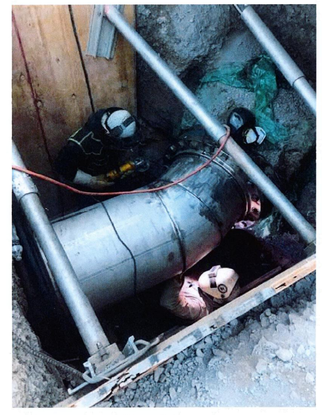

24" PRIMARY INFLUENT CONNECTION AT HEADWORKS

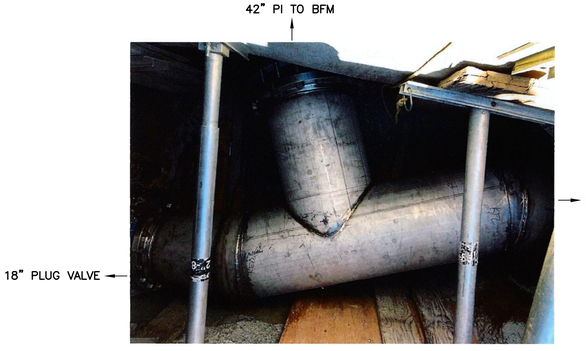

24" PRIMARY INFLUENT AT TIE-IN

RECORD DRAWING
THIS RECORD DRAWING HAS BEEN PREPARED FROM THE ORIGINAL CONTRACT DOCUMENTS SIGNED AND SEALED BY THE RESPONSIBLE ENGINEER OF RECORD. ADDITIONAL INFORMATION HAS BEEN PROVIDED BY OTHERS TO REPRESENT AS-CONSTRUCTED CONDITION AND IS SHOWN ON THESE RECORD DRAWINGS. THE RESPONSIBLE ENGINEER OF RECORD CANNOT VERIFY THE ACCURACY OF THE AS-CONSTRUCTED CONDITION INFORMATION REPRESENTED ON THE RECORD DRAWINGS.

0" — 1" — VERIFY SCALES — BAR IS ONE INCH LONG ON FULL SIZE DRAWING. IF NOT ONE INCH LONG ON THIS DRAWING, ADJUST SCALES ACCORDINGLY

Woodard & Curran

REV	DATE	BY	APVD	DESCRIPTION
1	07/22	CT	TV	RECORD DRAWING

DESIGNED M. TAKEMOTO
DRAWN C. TO
CHECKED M. NAKAMOTO

SUBMITTED: MARK TAKEMOTO, RMC PROJECT ENGINEER CE-64369
APPROVED: STEVE CLARY, RMC ENGINEER CE-30318

SAUSALITO · MARIN CITY SANITARY DISTRICT

TREATMENT AND WET WEATHER FLOW UPGRADE

CIVIL
YARD PIPING PLAN

DWG NO C200-1A
SHEET NO 48A OF 226
PROJ NO 055-006
DATE JULY 2022

FILENAME: 055-006-C100-1 8-01-22 12:13pm cto || XREFS: X-SMCSD-TBLK | X-Topo Survey | X-Site | X-Treatment Plant site plan |<C<--

Last Saved By: cto 8-01-22 10:09am

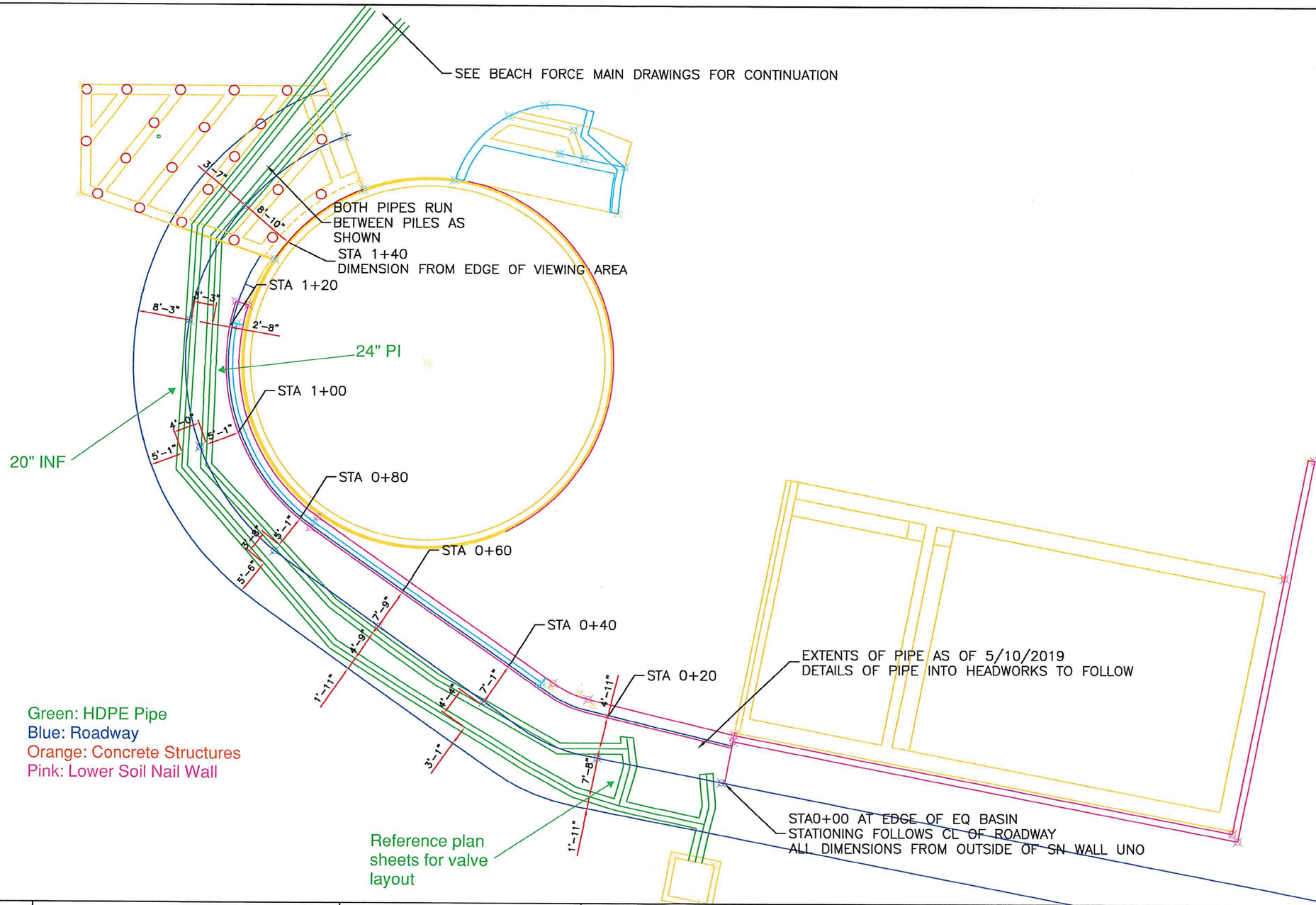

\\flatironcorp.com\activejobs\2111\2111_Shared\SBA\As-Built Tracking\PE and PI 5.10.2019.dwg 11 May 2019 11:14 AM

FLATIRON

PE and INF Layout

FILENAME: 0055-006-C100-1 8-01-22 12:14pm cto || XREFS: | X-SMCSD-TBLK | X-Topo Survey | X-Site | X-Treatment Plant site plan |<<--

Last Saved By: cto 8-01-22 10:09am

RECORD DRAWING
THIS RECORD DRAWING HAS BEEN PREPARED FROM THE ORIGINAL CONTRACT DOCUMENTS SIGNED AND SEALED BY THE RESPONSIBLE ENGINEER OF RECORD. ADDITIONAL INFORMATION HAS BEEN PROVIDED BY OTHERS TO REPRESENT AS-CONSTRUCTED CONDITION AND IS SHOWN ON THESE RECORD DRAWINGS. THE RESPONSIBLE ENGINEER OF RECORD CANNOT VERIFY THE ACCURACY OF THE AS-CONSTRUCTED CONDITION INFORMATION REPRESENTED ON THE RECORD DRAWINGS.

0" — 1" — VERIFY SCALES — BAR IS ONE INCH LONG ON FULL SIZE DRAWING. IF NOT ONE INCH LONG ON THIS DRAWING, ADJUST SCALES ACCORDINGLY

Woodard & Curran

REV	DATE	BY	APVD	DESCRIPTION
1	07/22	CT	TV	RECORD DRAWING

DESIGNED M. TAKEMOTO
DRAWN C. TO
CHECKED M. NAKAMOTO

SUBMITTED: MARK TAKEMOTO, RMC PROJECT ENGINEER CE-64369
APPROVED: STEVE CLARY, RMC ENGINEER CE-30318

SAUSALITO · MARIN CITY SANITARY DISTRICT

TREATMENT AND WET WEATHER FLOW UPGRADE

CIVIL
YARD PIPING PLAN

DWG NO C200-1B
SHEET NO 48B OF 226
PROJ NO 055-006
DATE JULY 2022

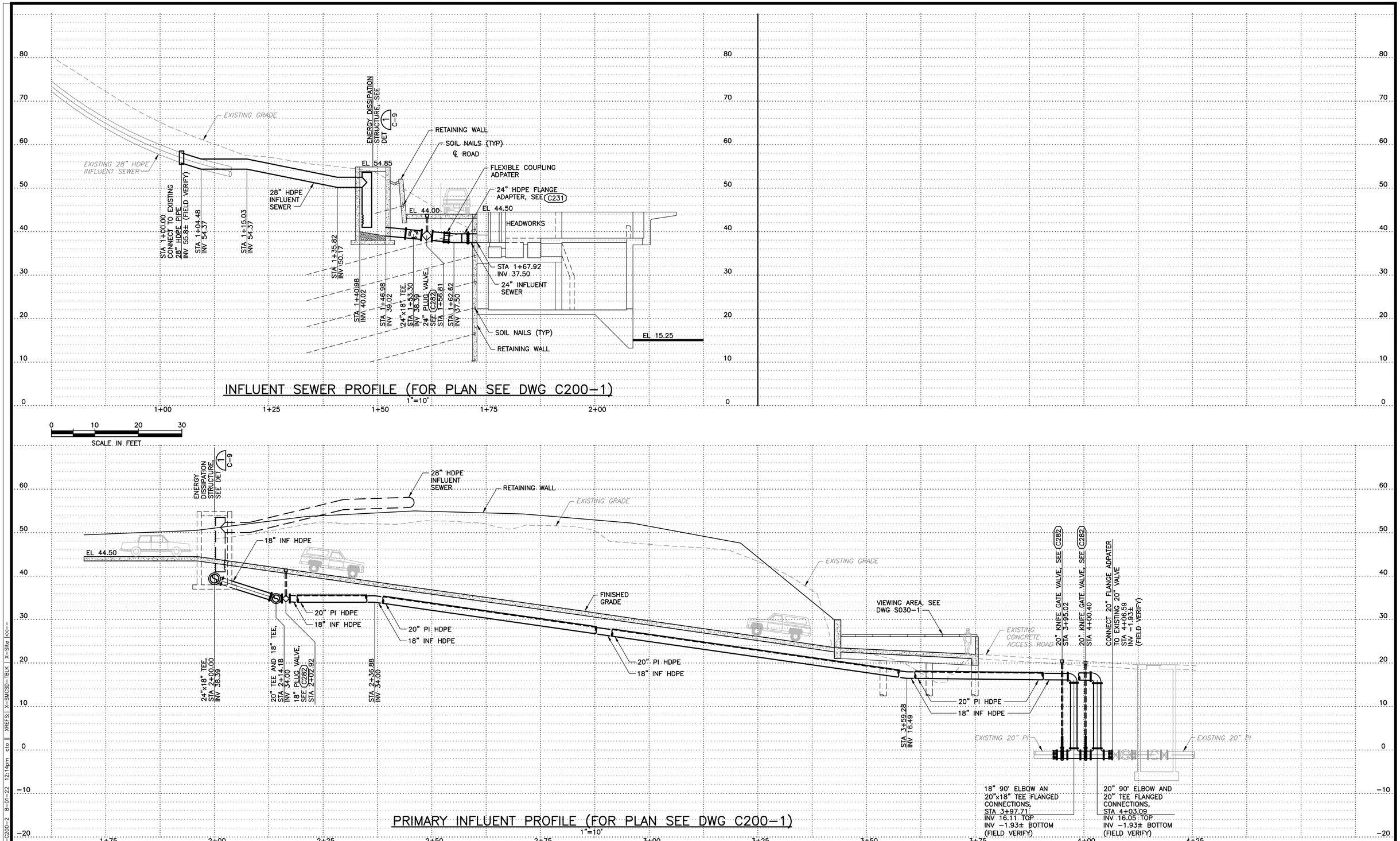

INFLUENT SEWER PROFILE (FOR PLAN SEE DWG C200-1)

PRIMARY INFLUENT PROFILE (FOR PLAN SEE DWG C200-1)

RECORD DRAWING

THIS RECORD DRAWING HAS BEEN PREPARED FROM THE ORIGINAL CONTRACT DOCUMENTS SIGNED AND SEALED BY THE RESPONSIBLE ENGINEER OF RECORD. ADDITIONAL INFORMATION HAS BEEN PROVIDED BY OTHERS TO REPRESENT AS-CONSTRUCTED CONDITION AND IS SHOWN ON THESE RECORD DRAWINGS. THE RESPONSIBLE ENGINEER OF RECORD CANNOT VERIFY THE ACCURACY OF THE AS-CONSTRUCTED CONDITION INFORMATION REPRESENTED ON THE RECORD DRAWINGS.

0" 1" — VERIFY SCALES — BAR IS ONE INCH LONG ON FULL SIZE DRAWING. IF NOT ONE INCH LONG ON THIS DRAWING, ADJUST SCALES ACCORDINGLY

Woodard & Curran

REV	DATE	BY	APVD	DESCRIPTION
1	07/22	CT	TV	RECORD DRAWING

DESIGNED M. TAKEMOTO
DRAWN C. TO
CHECKED M. NAKAMOTO

SUBMITTED: MARK TAKEMOTO, RMC PROJECT ENGINEER CE-64369
APPROVED: STEVE CLARY, RMC ENGINEER CE-30318

SAUSALITO · MARIN CITY SANITARY DISTRICT

TREATMENT AND WET WEATHER FLOW UPGRADE

PIPE PROFILES - 1

DWG NO C200-2
SHEET NO 49 OF 226
PROJ NO 055-006
DATE JULY 2022

FILENAME: 0055-006-C200-2 8-01-22 12:14pm cto || XREFS:| X-SMCSD-TBLK | X-Site |<<--

Last Saved By: cto 8-01-22 10:11am

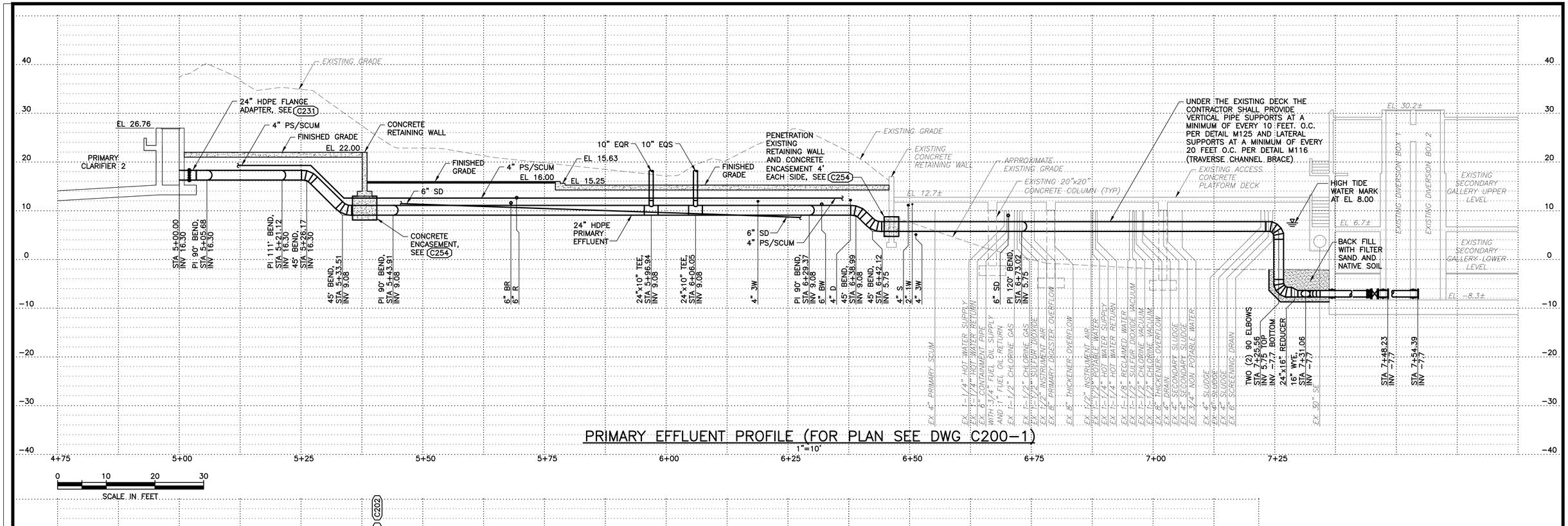

PRIMARY EFFLUENT PROFILE (FOR PLAN SEE DWG C200-1)

0 10 20 30
SCALE IN FEET

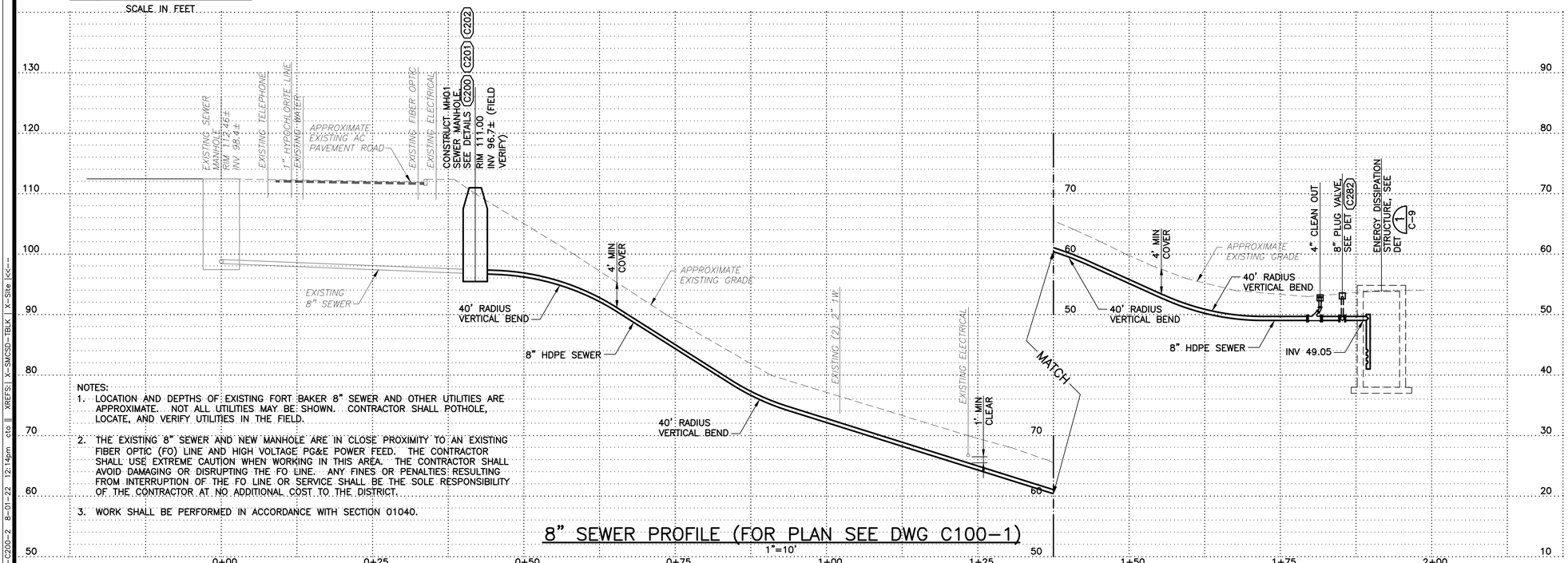

8" SEWER PROFILE (FOR PLAN SEE DWG C100-1)

NOTES:
1. LOCATION AND DEPTHS OF EXISTING FORT BAKER 8" SEWER AND OTHER UTILITIES ARE APPROXIMATE. NOT ALL UTILITIES MAY BE SHOWN. CONTRACTOR SHALL POTHOLE, LOCATE, AND VERIFY UTILITIES IN THE FIELD.
2. THE EXISTING 8" SEWER AND NEW MANHOLE ARE IN CLOSE PROXIMITY TO AN EXISTING FIBER OPTIC (FO) LINE AND HIGH VOLTAGE PG&E POWER FEED. THE CONTRACTOR SHALL USE EXTREME CAUTION WHEN WORKING IN THIS AREA. THE CONTRACTOR SHALL AVOID DAMAGING OR DISRUPTING THE FO LINE. ANY FINES OR PENALTIES RESULTING FROM INTERRUPTION OF THE FO LINE OR SERVICE SHALL BE THE SOLE RESPONSIBILITY OF THE CONTRACTOR AT NO ADDITIONAL COST TO THE DISTRICT.
3. WORK SHALL BE PERFORMED IN ACCORDANCE WITH SECTION 01040.

RECORD DRAWING
THIS RECORD DRAWING HAS BEEN PREPARED FROM THE ORIGINAL CONTRACT DOCUMENTS SIGNED AND SEALED BY THE RESPONSIBLE ENGINEER OF RECORD. ADDITIONAL INFORMATION HAS BEEN PROVIDED BY OTHERS TO REPRESENT AS-CONSTRUCTED CONDITION AND IS SHOWN ON THESE RECORD DRAWINGS. THE RESPONSIBLE ENGINEER OF RECORD CANNOT VERIFY THE ACCURACY OF THE AS-CONSTRUCTED CONDITION INFORMATION REPRESENTED ON THE RECORD DRAWINGS.

0" 1" — VERIFY SCALES — BAR IS ONE INCH LONG ON FULL SIZE DRAWING. IF NOT ONE INCH LONG ON THIS DRAWING, ADJUST SCALES ACCORDINGLY

Woodard & Curran

REV	DATE	BY	APVD	DESCRIPTION
1	07/22	CT	TV	RECORD DRAWING

DESIGNED M. TAKEMOTO
DRAWN C. TO
CHECKED M. NAKAMOTO

SUBMITTED: MARK TAKEMOTO, RMC PROJECT ENGINEER CE-64369
APPROVED: STEVE CLARY, RMC ENGINEER CE-30318

SAUSALITO · MARIN CITY SANITARY DISTRICT

TREATMENT AND WET WEATHER FLOW UPGRADE

PIPE PROFILES - 2

DWG NO C200-3
SHEET NO 50 OF 226
PROJ NO 055-006
DATE JULY 2022

FILENAME: 0055-006-C200-2 8-01-22 12:14pm cto || XREFs: X-SMCSD-TBLK | X-Site |<<--

Last Saved By: cto 8-01-22 10:11am

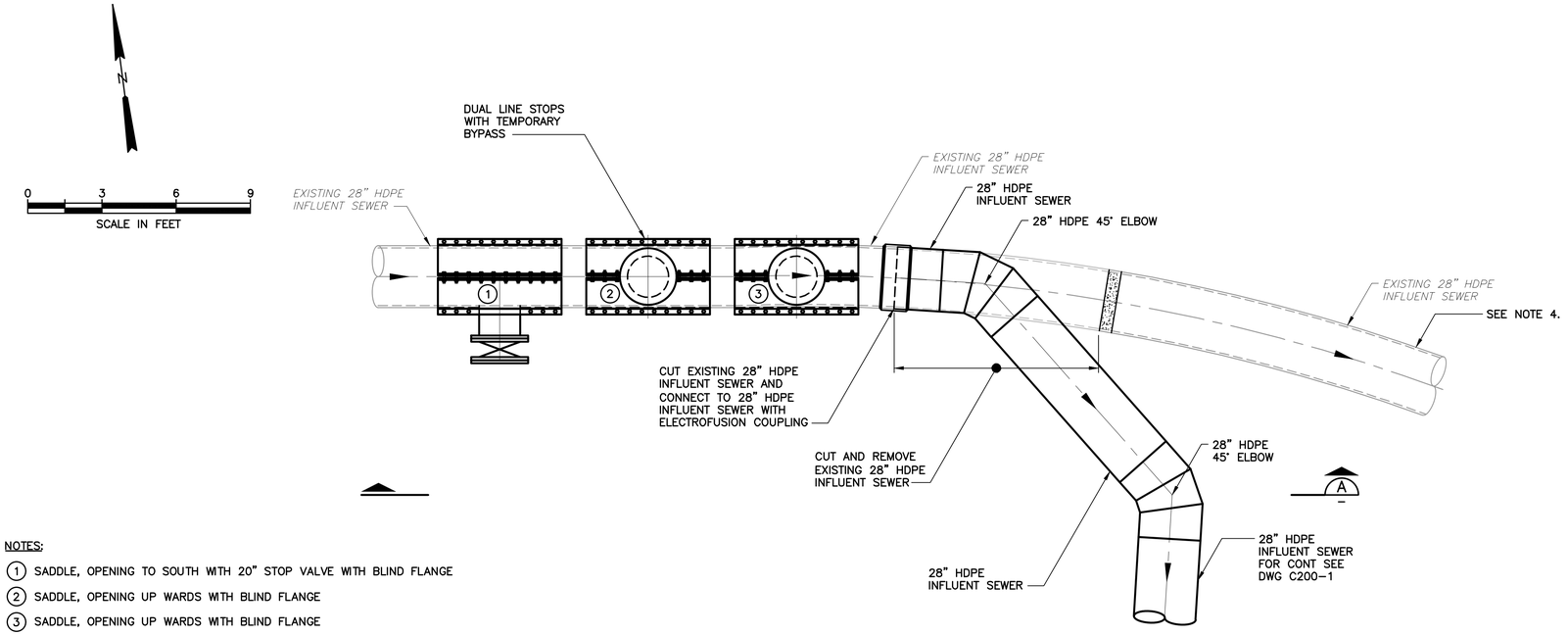

NOTES:

(1) SADDLE, OPENING TO SOUTH WITH 20" STOP VALVE WITH BLIND FLANGE

(2) SADDLE, OPENING UP WARDS WITH BLIND FLANGE

(3) SADDLE, OPENING UP WARDS WITH BLIND FLANGE

SEE DWG C200-1 FOR LOCATION

INFLUENT SEWER TEMPORARY BYPASS PLAN

1" = 3'-0"

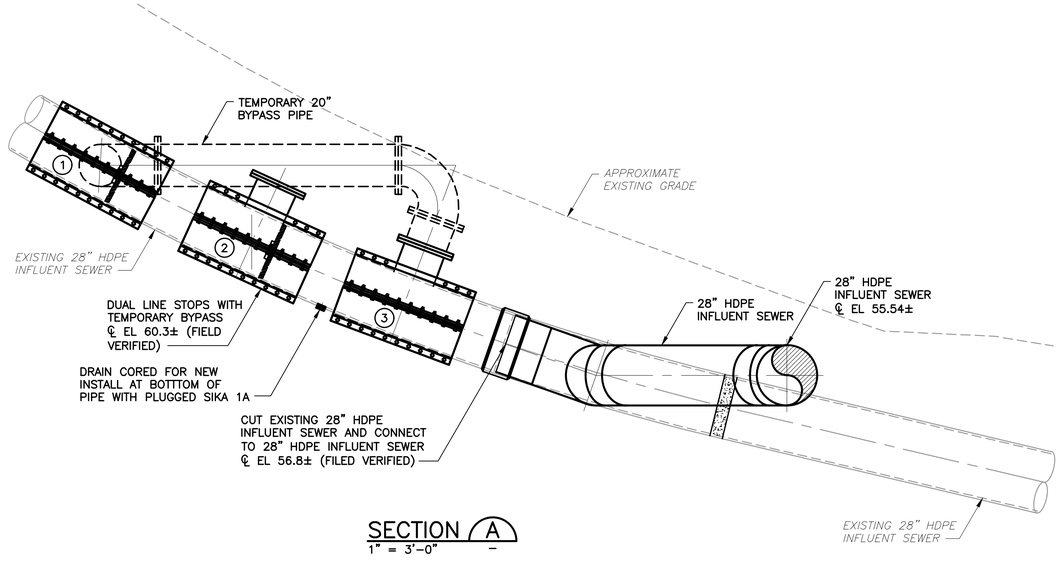

SECTION A

1" = 3'-0"

NOTES:

1. SHUTDOWNS SHALL BE PERFORMED IN ACCORDANCE WITH SECTION 01030.
2. ADDITIONAL SEQUENCING AND CONSTRAINTS ARE LISTED IN SECTION 01040.
3. CONTRACTOR SHALL VERIFY LOCATION OF AND CONNECTION REQUIREMENTS FOR EXISTING UTILITIES IN THE FIELD.

RECORD DRAWING

THIS RECORD DRAWING HAS BEEN PREPARED FROM THE ORIGINAL CONTRACT DOCUMENTS SIGNED AND SEALED BY THE RESPONSIBLE ENGINEER OF RECORD. ADDITIONAL INFORMATION HAS BEEN PROVIDED BY OTHERS TO REPRESENT AS-CONSTRUCTED CONDITION AND IS SHOWN ON THESE RECORD DRAWINGS. THE RESPONSIBLE ENGINEER OF RECORD CANNOT VERIFY THE ACCURACY OF THE AS-CONSTRUCTED CONDITION INFORMATION REPRESENTED ON THE RECORD DRAWINGS.

0" — 1" VERIFY SCALES — BAR IS ONE INCH LONG ON FULL SIZE DRAWING. IF NOT ONE INCH LONG ON THIS DRAWING, ADJUST SCALES ACCORDINGLY

Woodard & Curran

REV	DATE	BY	APVD	DESCRIPTION
1	07/22	CT	TV	RECORD DRAWING

DESIGNED M. TAKEMOTO
DRAWN C. TO
CHECKED M. NAKAMOTO

SUBMITTED: MARK TAKEMOTO, RMC PROJECT ENGINEER CE-64369

APPROVED: STEVE CLARY, RMC ENGINEER CE-30318

SAUSALITO · MARIN CITY SANITARY DISTRICT

TREATMENT AND WET WEATHER FLOW UPGRADE

INFLUENT SEWER TEMPORARY BYPASS PLAN AND SECTIONS

DWG NO C200-4
SHEET NO 51 OF 226
PROJ NO 055-006
DATE JULY 2022

FILENAME: 0055-006-C200-2 8-01-22 12:14pm cto || XREFS:| X-SMCSD-TBLK | X-Site |<<--

Last Saved By: cto 8-01-22 10:11am

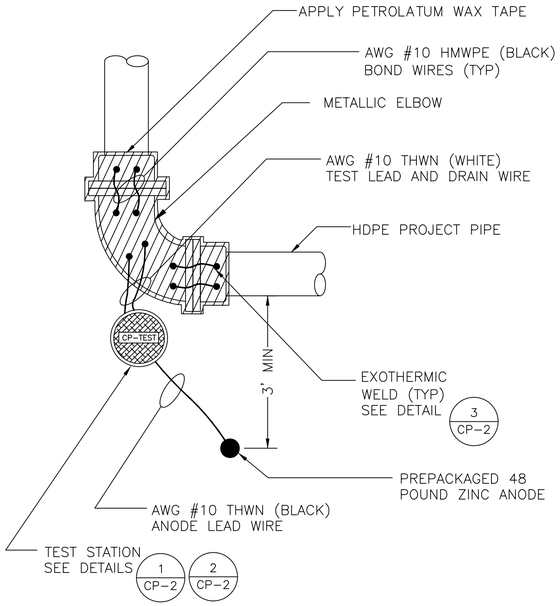

TYPICAL ANODE INSTALLATION
AT ELBOW
NTS
1 –

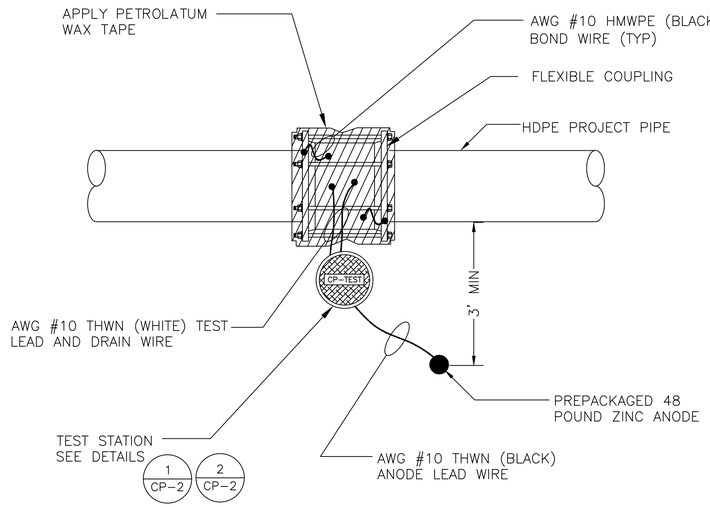

TYPICAL ANODE INSTALLATION
AT FLEXIBLE COUPLING
NTS
2 –

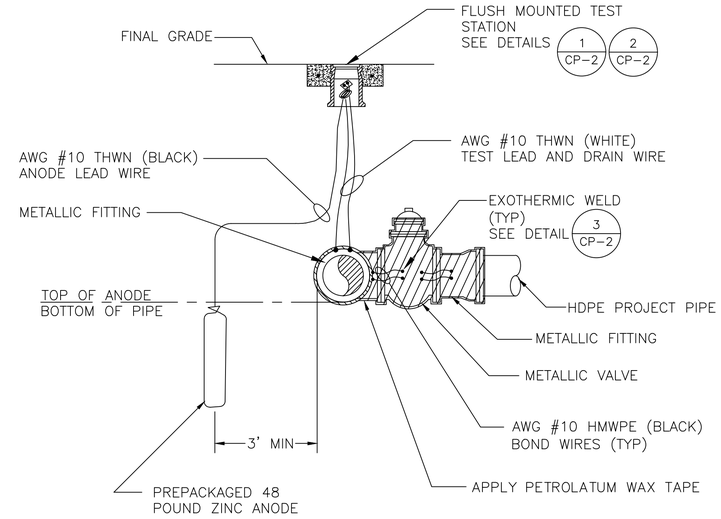

ANODE INSTALLATION
AT GATE VALVE
NTS
3 –

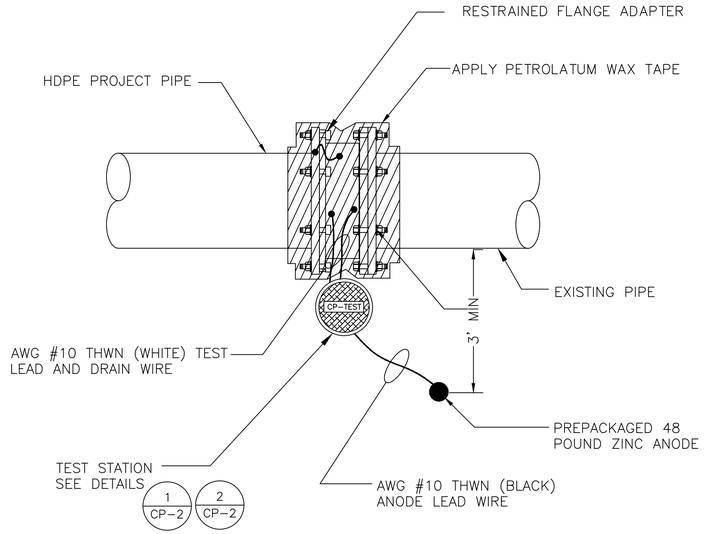

TYPICAL PETROLATUM WAX TAPE WRAP
AROUND RESTRAINED FLANGE ADAPTER
NTS
4 –

GENERAL NOTES:

1. THESE DETAILS ARE TYPICAL. THE NUMBER, AND ARRANGEMENT OF FITTINGS AND VALVES MAY VARY. THE DETAIL THAT IS MOST SIMILAR TO THE ACTUAL ARRANGEMENT SHOULD BE USED.
2. INSTALL AN ANODE ON ALL METALLIC VALVES, FITTINGS, TEES, CROSSES, AND OTHER METALLIC APPURTENANCES AS SHOWN ON THE DRAWINGS AND INDICATED IN THE SPECIFICATIONS
3. TOP OF ANODE SHOULD BE AT THE PIPE'S INVERT DEPTH

REGISTERED PROFESSIONAL ENGINEER
GLENN H. WILSON
NO. CR1076
CORROSION
STATE OF CALIFORNIA

RECORD DRAWING
THIS RECORD DRAWING HAS BEEN PREPARED FROM THE ORIGINAL CONTRACT DOCUMENTS SIGNED AND SEALED BY THE RESPONSIBLE ENGINEER OF RECORD. ADDITIONAL INFORMATION HAS BEEN PROVIDED BY OTHERS TO REPRESENT AS-CONSTRUCTED CONDITION AND IS SHOWN ON THESE RECORD DRAWINGS. THE RESPONSIBLE ENGINEER OF RECORD CANNOT VERIFY THE ACCURACY OF THE AS-CONSTRUCTED CONDITION INFORMATION REPRESENTED ON THE RECORD DRAWINGS.

0" — 1" — VERIFY SCALES — BAR IS ONE INCH LONG ON FULL SIZE DRAWING. IF NOT ONE INCH LONG ON THIS DRAWING, ADJUST SCALES ACCORDINGLY

V&A Consulting Engineers, Inc.
1000 Broadway, Suite 320
Oakland, CA 94607
Tel. (510) 903-6600, Fax (510) 903-6601
Project No. 13-0046

Woodard & Curran

REV	DATE	BY	APVD	DESCRIPTION
1				
2				
3				
4				
5				

DESIGNED	CIT
DRAWN	MQT
CHECKED	GHW

SUBMITTED: MARK TAKEMOTO, RMC PROJECT ENGINEER CE-64369
APPROVED: STEVE CLARY, RMC ENGINEER CE-30318

SAUSALITO · MARIN CITY SANITARY DISTRICT

TREATMENT AND WET WEATHER FLOW UPGRADE

CORROSION CONTROL DETAILS

DWG NO	CP-1
SHEET NO	OF 226
PROJ NO	055-006
DATE	JULY 2022

FILENAME: 13-0046 Details Corrosion 7-12-22 7-14-22 08:36am MJuenger || XREFS:| X-SMCSD-TBLK 7-12-22 |<<--
Last Saved By: MJuenger 10-10-16 05:31pm

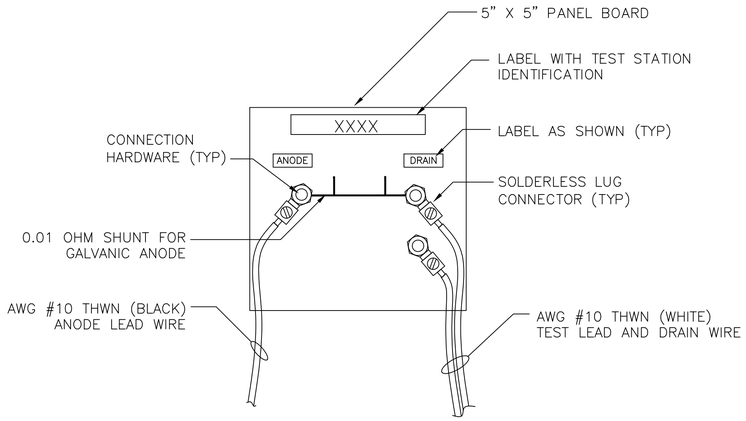

ANODE TEST STATION TEST BOARD
NTS
1 / –

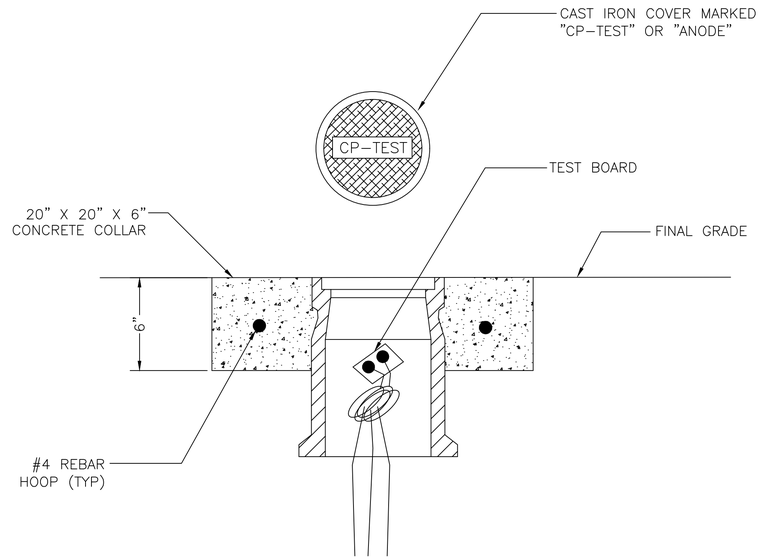

FLUSH MOUNTED TEST STATION
NTS
2 / –



1. FILE PIPE/STRUCTURE TO BARE METAL AND CLEAN SURFACE.



2. STRIP INSULATION FROM WIRE AND ATTACH SLEEVE.

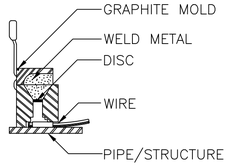

3. HOLD MOLD FIRMLY WITH OPENING AWAY FROM OPERATOR. IGNITE WITH FLINT GUN REMOVE SLAG FROM CONNECTION WITH CHIPPING HAMMER.

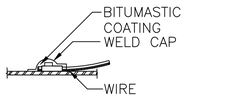

4. COVER CONNECTION WITH BITUMASTIC COATING OVER ALL EXPOSED METAL, PLACE WELD CAP OVER CONNECTION. REPAIR ALL DAMAGE TO COATING AND LINING IN ACCORDANCE WITH MFG RECOMMENDATIONS.

EXOTHERMIC WELD
NTS
3 / –

REGISTERED PROFESSIONAL ENGINEER
GLENN H. WILLSON
NO. CR1076
CORROSION
STATE OF CALIFORNIA

RECORD DRAWING
THIS RECORD DRAWING HAS BEEN PREPARED FROM THE ORIGINAL CONTRACT DOCUMENTS SIGNED AND SEALED BY THE RESPONSIBLE ENGINEER OF RECORD. ADDITIONAL INFORMATION HAS BEEN PROVIDED BY OTHERS TO REPRESENT AS-CONSTRUCTED CONDITION AND IS SHOWN ON THESE RECORD DRAWINGS. THE RESPONSIBLE ENGINEER OF RECORD CANNOT VERIFY THE ACCURACY OF THE AS-CONSTRUCTED CONDITION INFORMATION REPRESENTED ON THE RECORD DRAWINGS.

0" — 1" — VERIFY SCALES — BAR IS ONE INCH LONG ON FULL SIZE DRAWING. IF NOT ONE INCH LONG ON THIS DRAWING, ADJUST SCALES ACCORDINGLY

V&A
V&A Consulting Engineers, Inc.
1000 Broadway, Suite 320
Oakland, CA 94607
Tel. (510) 903-6600, Fax (510) 903-6601
Project No. 13-0046

Woodard & Curran

REV	DATE	BY	APVD	DESCRIPTION
1				
2				
3				
4				
5				

DESIGNED	CIT
DRAWN	MQT
CHECKED	GHW

SUBMITTED: MARK TAKEMOTO
RMC PROJECT ENGINEER CE-64369

APPROVED: STEVE CLARY
RMC ENGINEER CE-30318

SAUSALITO · MARIN CITY SANITARY DISTRICT

TREATMENT AND WET WEATHER FLOW UPGRADE

CORROSION CONTROL DETAILS

DWG NO	CP-2
SHEET NO	OF 226
PROJ NO	055-006
DATE	JULY 2022

FILENAME: 13-0046 Details Corrosion 7-12-22 7-14-22 08:37am MJuenger || XREFS: X-SMCSD-TBLK 7-12-22 |<<--

Last Saved By: MJuenger 10-10-16 05:31pm

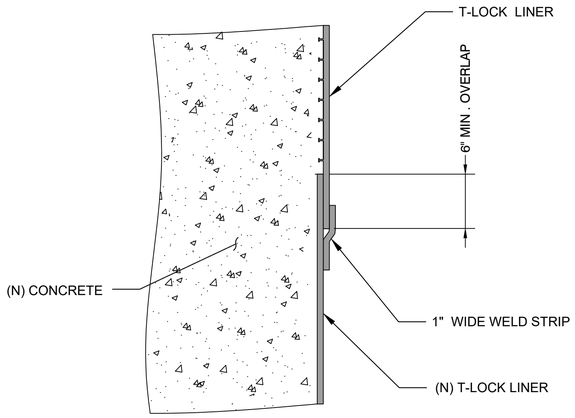

TERMINATION OF EXISTING LINER 1
NTS

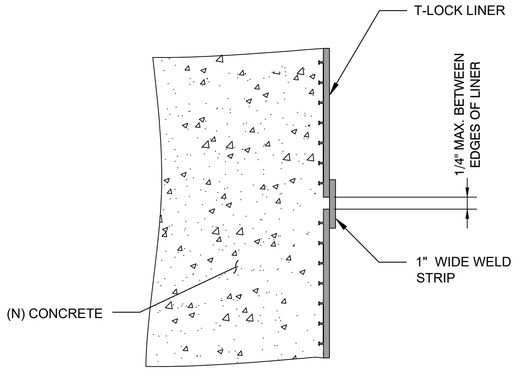

TERMINATION AT JOINT 2
NTS

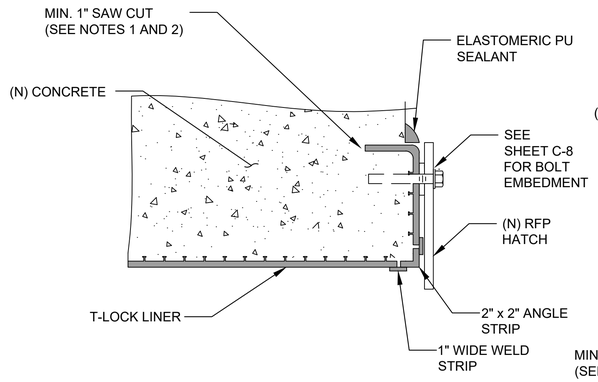

RFP HATCH TERMINATION DETAIL 3
NTS

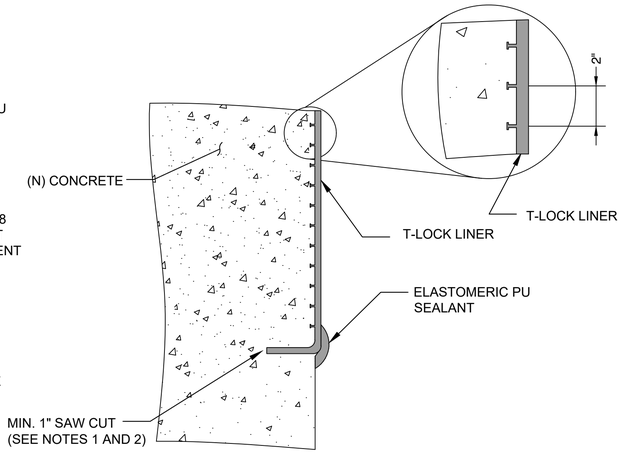

LOWER EMBEDDED TERMINATION DETAIL 4
NTS

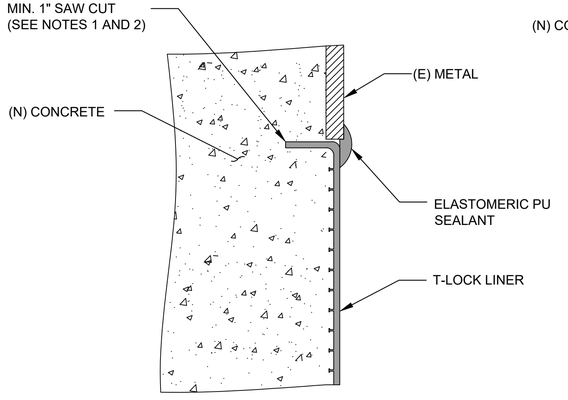

TERMINATION AT EXISTING METAL PARTS THAT CANNOT BE REMOVED 5
NTS

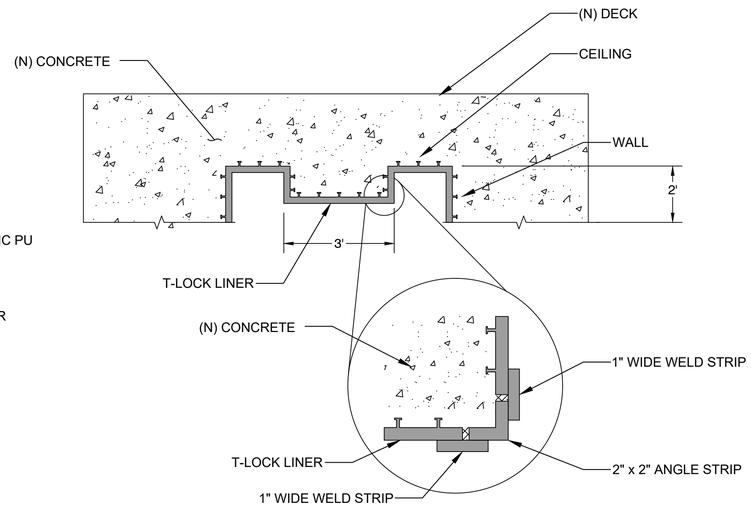

CEILING DETAIL 6
NTS

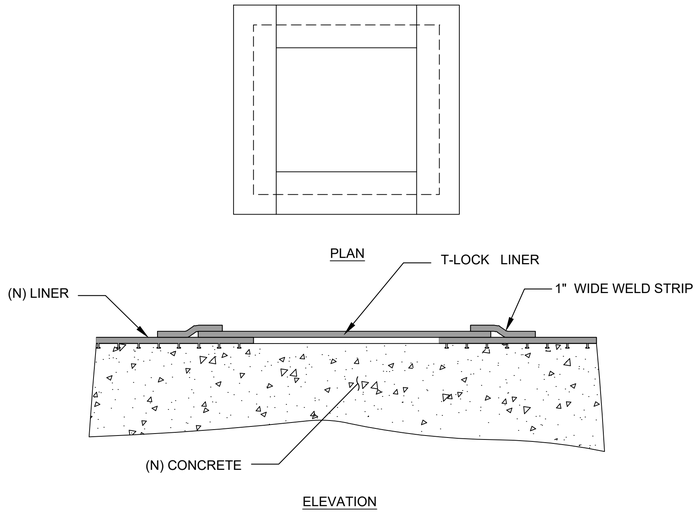

REPAIR DETAIL FOR HOLE IN LINER 7
NTS

NOTES:

1. THESE DETAILS ARE TO BE IMPLEMENTED IN AREAS THAT ARE NOT IMMERSED AND SUBJECT TO A FOUL AIR ENVIRONMENT OR ABOVE THE WASTEWATER SURFACE.
2. THE SAW CUT INDICATED SHALL BE INSTALLED AFTER THE CONCRETE HAS CURED FOR 28 DAYS. THE PVC LINER FLAP TO TO BE EMBEDDED SHALL HAVE ITS T-SHAPED EXTENSIONS REMOVED PRIOR TO THE PLACEMENT OF THE CONCRETE AND SECURED TO THE CONCRETE FORM. AFTER THE FORM HAS BEEN REMOVED, THE PVC LINER FLAP SHALL BE PEELED AWAY FROM THE CONCRETE SURFACE WITHOUT DAMAGING THE LINER. THE PVC LINER FLAP SHALL BE INSERTED INTO THE SAW CUT AND A SEALANT SHALL BE APPLIED PER DETAIL.

REGISTERED PROFESSIONAL ENGINEER
MANUEL NAJAR
NO. 6184
CHEMICAL
STATE OF CALIFORNIA

RECORD DRAWING
THIS RECORD DRAWING HAS BEEN PREPARED FROM THE ORIGINAL CONTRACT DOCUMENTS SIGNED AND SEALED BY THE RESPONSIBLE ENGINEER OF RECORD. ADDITIONAL INFORMATION HAS BEEN PROVIDED BY OTHERS TO REPRESENT AS-CONSTRUCTED CONDITION AND IS SHOWN ON THESE RECORD DRAWINGS. THE RESPONSIBLE ENGINEER OF RECORD CANNOT VERIFY THE ACCURACY OF THE AS-CONSTRUCTED CONDITION INFORMATION REPRESENTED ON THE RECORD DRAWINGS.

0" 1" VERIFY SCALES
BAR IS ONE INCH LONG ON FULL SIZE DRAWING. IF NOT ONE INCH LONG ON THIS DRAWING, ADJUST SCALES ACCORDINGLY

V&A
V&A Consulting Engineers, Inc.
1000 Broadway, Suite 320
Oakland, CA 94607
Tel. (510) 903-6600, Fax (510) 903-6601
Project No. 13-0046

Woodard & Curran

REV	DATE	BY	APVD	DESCRIPTION
1	3/17	MN	JLV	ADDENDUM

DESIGNED MN
DRAWN MQT
CHECKED JLV

SUBMITTED: MARK TAKEMOTO
RMC PROJECT ENGINEER CE-64369

APPROVED: STEVE CLARY
RMC ENGINEER CE-30318

SAUSALITO · MARIN CITY SANITARY DISTRICT

TREATMENT AND WET WEATHER FLOW UPGRADE

CONCRETE REPAIR AND LINING DETAILS

DWG NO	CP-3
SHEET NO	OF 226
PROJ NO	055-006
DATE	JULY 2022

FILENAME: 13-0046 Cooling Details_Rev_3212817 7-15-22 02:20pm MJuenger || XREFS:| X-SMCSD-TBLK 7-12-22 |<<--

Last Saved By: MJuenger 7-15-22 11:39am

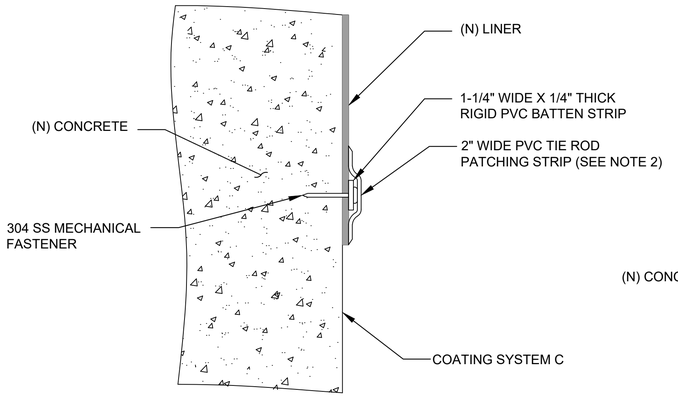

CROSS SECTION

TERMINATION OF EXSITING LINER 1
NTS

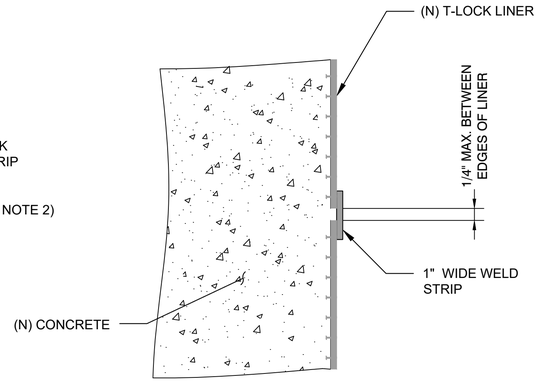

CROSS SECTION

TERMINATION AT JOINT 2
NTS

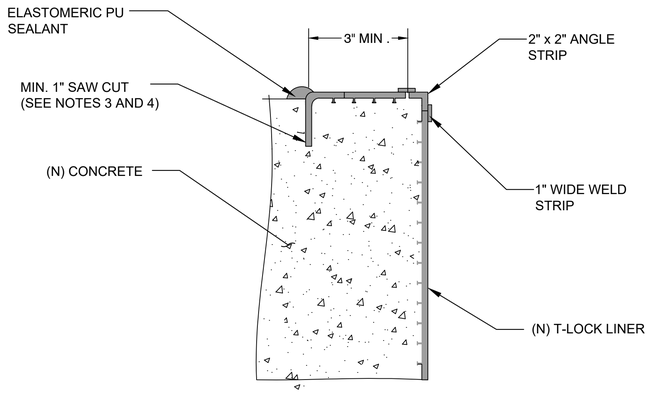

PLAN

TOP OF WALL TERMINATION DETAIL 3
NTS

NOTES:

1. BEND SHEETS APPROXIMATELY 6-24" AROUND CORNER OF WALL CAREFULLY NOTCH T'S AS REQUIRED TO BEND.
2. PLACE NAILS WITHIN 1/4" OF SHEET EDGES.
3. THESE DETAILS ARE TO BE IMPLEMENTED IN AREAS THAT ARE NOT IMMERSED AND SUBJECT TO A FOUL AIR ENVIRONMENT OR ABOVE THE WASTEWATER SURFACE.
4. THE SAW CUT INDICATED SHALL BE INSTALLED AFTER THE CONCRETE HAS CURED FOR 28 DAYS. THE PVC LINER FLAP TO TO BE EMBEDDED SHALL HAVE ITS T-SHAPED EXTENSIONS REMOVED PRIOR TO THE PLACEMENT OF THE CONCRETE AND SECURED TO THE CONCRETE FORM. AFTER THE FORM HAS BEEN REMOVED, THE PVC LINER FLAP SHALL BE PEELED AWAY FROM THE CONCRETE SURFACE WITHOUT DAMAGING THE LINER. THE PVC LINER FLAP SHALL BE INSERTED INTO THE SAW CUT AND A SEALANT SHALL BE APPLIED PER DETAIL.

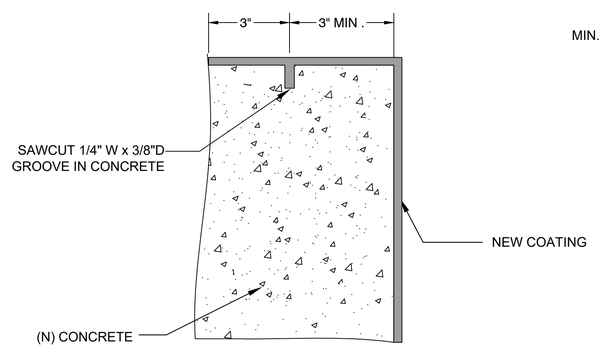

PLAN

TOP OF WALL TERMINATION DETAIL 4
NTS

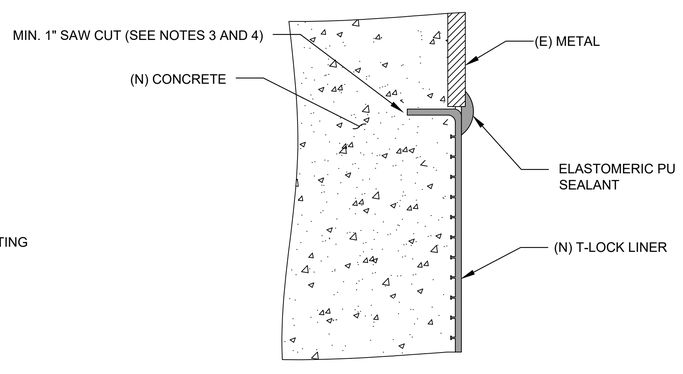

CROSS SECTION

TERMINATION AT EXISTING METAL PARTS THAT CANNOT BE REMOVED 5
NTS

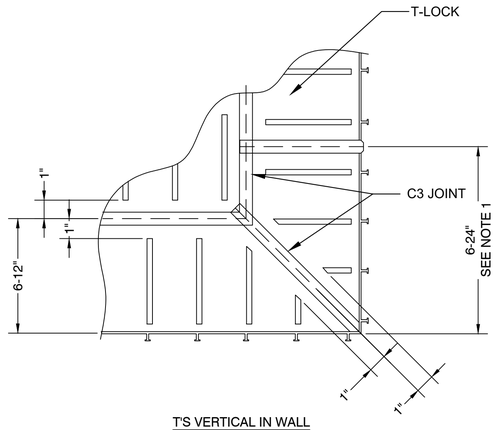

T'S VERTICAL IN WALL

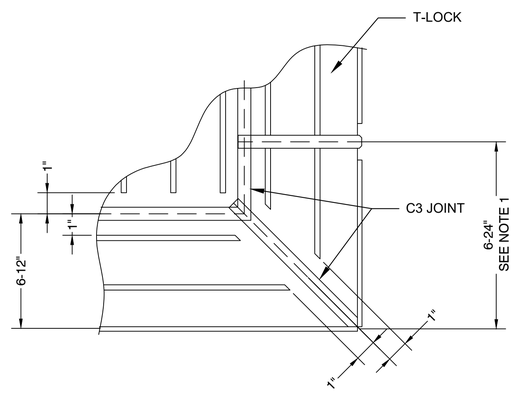

T'S HORIZONTAL IN WALL

T-LOCK CORNER DETAIL 6
NTS

REGISTERED PROFESSIONAL ENGINEER
MANUEL NAJAR
NO. 6184
CHEMICAL
STATE OF CALIFORNIA

RECORD DRAWING
THIS RECORD DRAWING HAS BEEN PREPARED FROM THE ORIGINAL CONTRACT DOCUMENTS SIGNED AND SEALED BY THE RESPONSIBLE ENGINEER OF RECORD. ADDITIONAL INFORMATION HAS BEEN PROVIDED BY OTHERS TO REPRESENT AS-CONSTRUCTED CONDITION AND IS SHOWN ON THESE RECORD DRAWINGS. THE RESPONSIBLE ENGINEER OF RECORD CANNOT VERIFY THE ACCURACY OF THE AS-CONSTRUCTED CONDITION INFORMATION REPRESENTED ON THE RECORD DRAWINGS.

0" 1" VERIFY SCALES
BAR IS ONE INCH LONG ON FULL SIZE DRAWING. IF NOT ONE INCH LONG ON THIS DRAWING, ADJUST SCALES ACCORDINGLY

V&A Consulting Engineers, Inc.
1000 Broadway, Suite 320
Oakland, CA 94607
Tel. (510) 903-6600, Fax (510) 903-6601
Project No. 13-0046

Woodard & Curran

REV	DATE	BY	APVD	DESCRIPTION
1	3/17	MN	JLV	ADDENDUM

DESIGNED	MN
DRAWN	MQT
CHECKED	JLV

SUBMITTED: MARK TAKEMOTO, RMC PROJECT ENGINEER CE-64369
APPROVED: STEVE CLARY, RMC ENGINEER CE-30318

SAUSALITO · MARIN CITY SANITARY DISTRICT

TREATMENT AND WET WEATHER FLOW UPGRADE

CONCRETE REPAIR AND LINING DETAILS

DWG NO	CP-4
SHEET NO	OF 226
PROJ NO	055-006
DATE	JULY 2022

FILENAME: 13-0046 Coating Details_Rev_3212817 7-14422 7-15-22 02:21pm MJuenger XREFS: X-SMCSD-TBLK 7-12-22 <<--

Last Saved By: MJuenger 7-15-22 11:39am

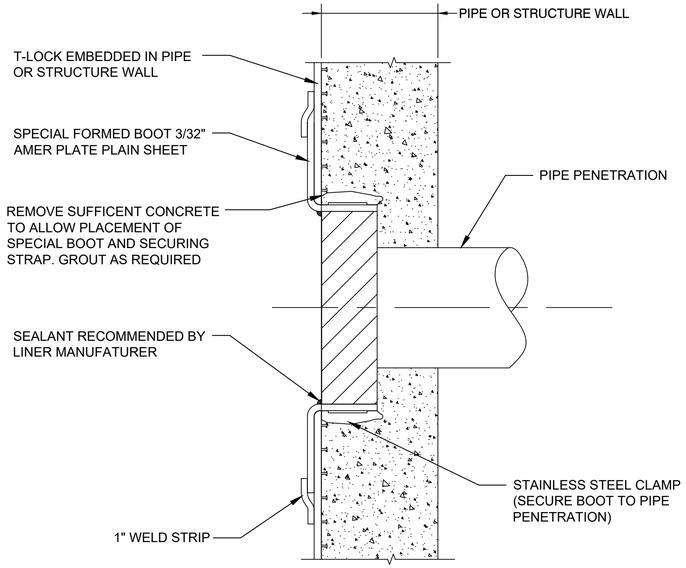

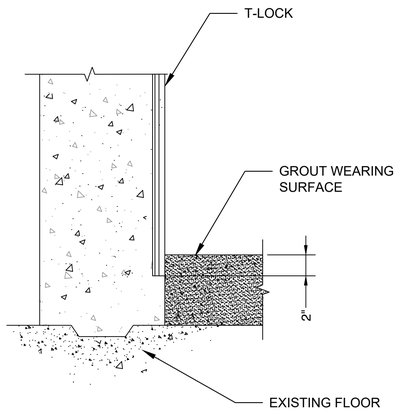

DETAIL A

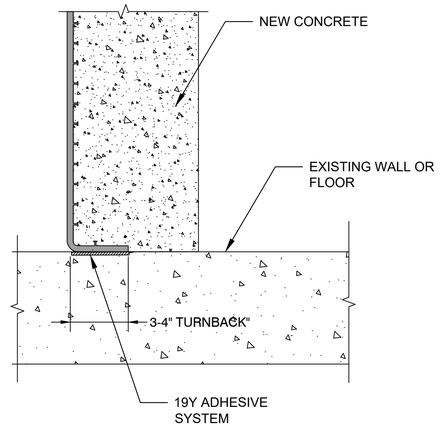

DETAIL B

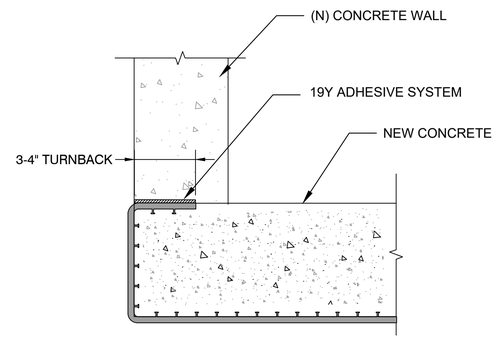

DETAIL C

SEALING FLANGE PENETRATIONS THRU T-LOCK LINED WALL

1 / -

NTS

TERMINATION OF T-LOCK AT EXISTING CONCRETE WALL OR UNLINED FLOOR

2 / -

NTS

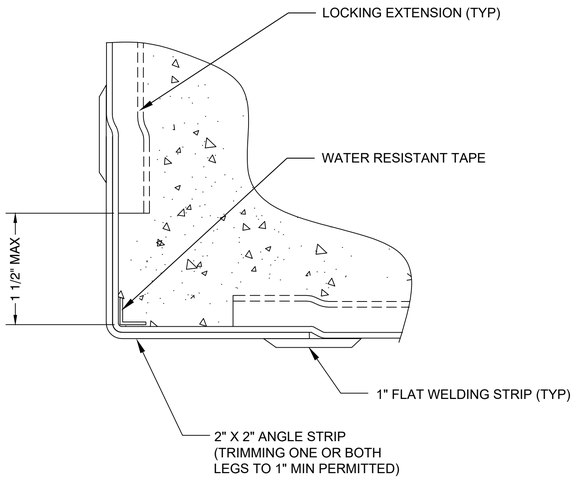

DETAIL A

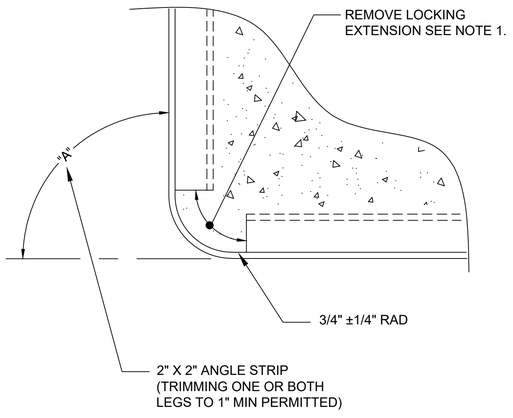

DETAIL B

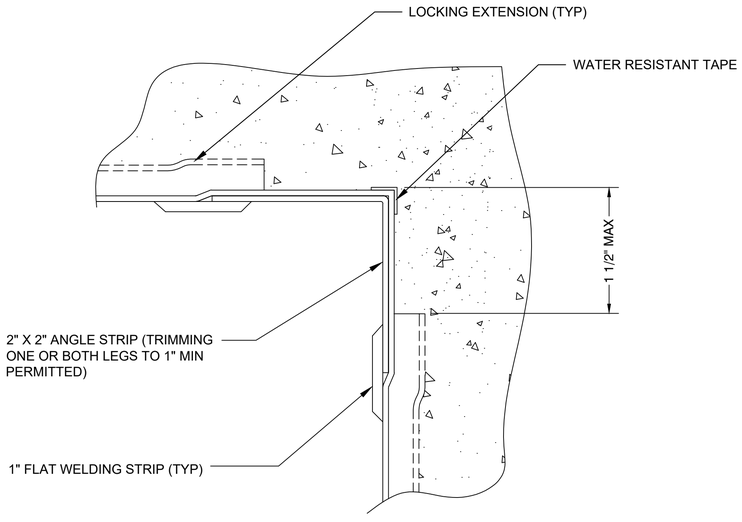

DETAIL C

NOTES:

1. THE LOCKING EXTENSIONS SHALL BE REMOVED TO WITHIN 1/32" OF THE FACE OF THE MAIN SHEET.
2. SHEET MUST BE ABOVE 50°F TO PERMIT BENDING AND HIGHER TEMPERATURES ARE RECOMMENED TO IMPROVE HANDLING

AMER-PLATE CORNER DETAIL

2 / -

NTS

REGISTERED PROFESSIONAL ENGINEER — MANUEL NAJAR — NO. 6184 — CHEMICAL — STATE OF CALIFORNIA

RECORD DRAWING
THIS RECORD DRAWING HAS BEEN PREPARED FROM THE ORIGINAL CONTRACT DOCUMENTS SIGNED AND SEALED BY THE RESPONSIBLE ENGINEER OF RECORD. ADDITIONAL INFORMATION HAS BEEN PROVIDED BY OTHERS TO REPRESENT AS-CONSTRUCTED CONDITION AND IS SHOWN ON THESE RECORD DRAWINGS. THE RESPONSIBLE ENGINEER OF RECORD CANNOT VERIFY THE ACCURACY OF THE AS-CONSTRUCTED CONDITION INFORMATION REPRESENTED ON THE RECORD DRAWINGS.

0" — 1" — VERIFY SCALES — BAR IS ONE INCH LONG ON FULL SIZE DRAWING. IF NOT ONE INCH LONG ON THIS DRAWING, ADJUST SCALES ACCORDINGLY

V&A Consulting Engineers, Inc.
1000 Broadway, Suite 320
Oakland, CA 94607
Tel. (510) 903-6600, Fax (510) 903-6601
Project No. 13-0046

Woodard & Curran

REV	DATE	BY	APVD	DESCRIPTION
1	3/17	MN	JLV	ADDENDUM

DESIGNED	MN
DRAWN	MQT
CHECKED	JLV

SUBMITTED: MARK TAKEMOTO, RMC PROJECT ENGINEER CE-64369

APPROVED: STEVE CLARY, RMC ENGINEER CE-30318

SAUSALITO · MARIN CITY SANITARY DISTRICT

TREATMENT AND WET WEATHER FLOW UPGRADE

CONCRETE REPAIR AND LINING DETAILS

DWG NO	CP-5
SHEET NO	OF 226
PROJ NO	055-006
DATE	JULY 2022

FILENAME: 13-0046 Coating Details_Rev_3212817 7142 7-15-22 02:22pm MJuenger || XREFS: || X-SMCSD-TBLK 7-12-22 |<<--

Last Saved By: MJuenger 7-15-22 11:39am

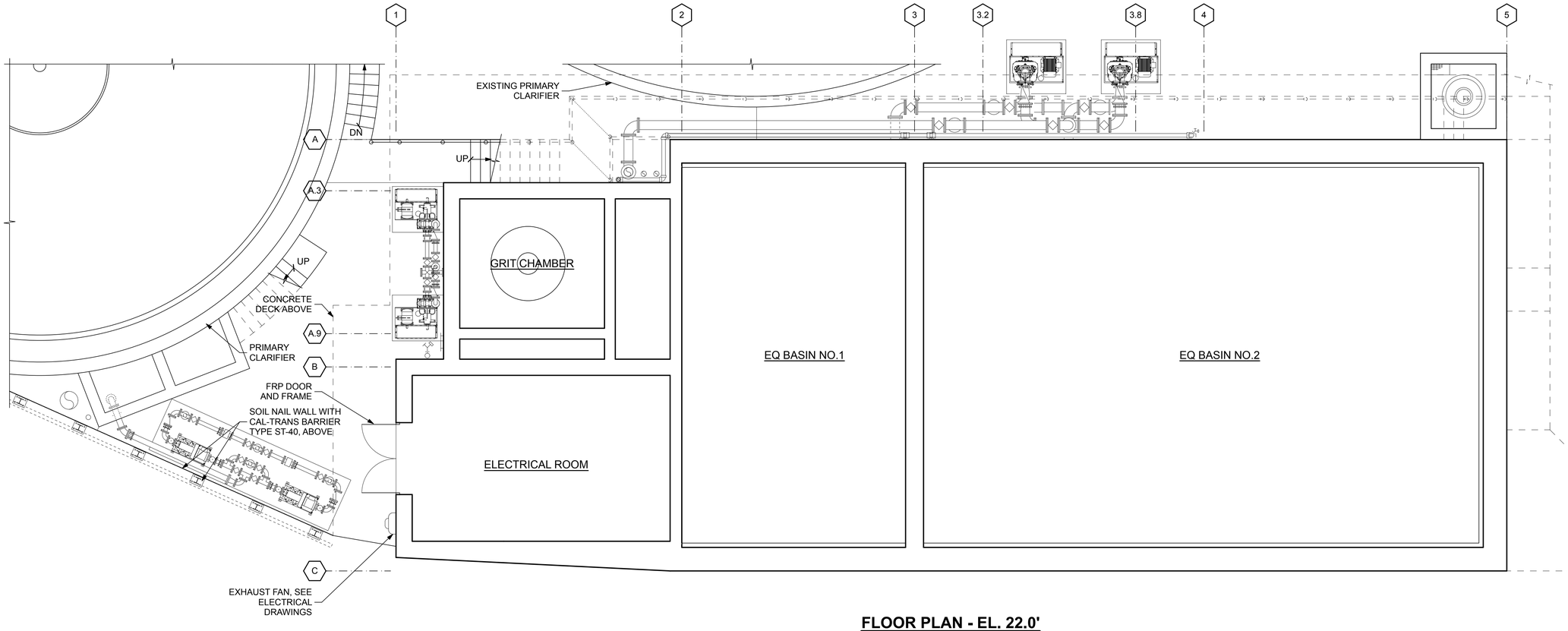

FLOOR PLAN - EL. 22.0'

3/16" = 1'-0"

NOTE:
SEE STRUCTURAL AND MECHANICAL DRAWINGS FOR ADDITIONAL INFORMATION.

RECORD DRAWING
THIS RECORD DRAWING HAS BEEN PREPARED FROM THE ORIGINAL CONTRACT DOCUMENTS SIGNED AND SEALED BY THE RESPONSIBLE ENGINEER OF RECORD. ADDITIONAL INFORMATION HAS BEEN PROVIDED BY OTHERS TO REPRESENT AS-CONSTRUCTED CONDITION AND IS SHOWN ON THESE RECORD DRAWINGS. THE RESPONSIBLE ENGINEER OF RECORD CANNOT VERIFY THE ACCURACY OF THE AS-CONSTRUCTED CONDITION INFORMATION REPRESENTED ON THE RECORD DRAWINGS.

0" — 1" — VERIFY SCALES — BAR IS ONE INCH LONG ON FULL SIZE DRAWING. IF NOT ONE INCH LONG ON THIS DRAWING, ADJUST SCALES ACCORDINGLY

Burks Toma Architects

Woodard & Curran

REV	DATE	BY	APVD	DESCRIPTION
1	7/22	MG	KB	RECORD DRAWING

DESIGNED	K. BURKS
DRAWN	M. GILROY
CHECKED	K. BURKS

SUBMITTED: MARK TAKEMOTO, RMC PROJECT ENGINEER CE-64369

APPROVED: STEVE CLARY, RMC ENGINEER CE-30318

SAUSALITO • MARIN CITY SANITARY DISTRICT

TREATMENT AND WET WEATHER FLOW UPGRADE

HEADWORK/GRIT AND EQ BASIN ARCHITECTURAL FLOOR PLAN

DWG NO	A100-1
SHEET NO	57 OF 226
PROJ NO	055-006
DATE	JULY 2022

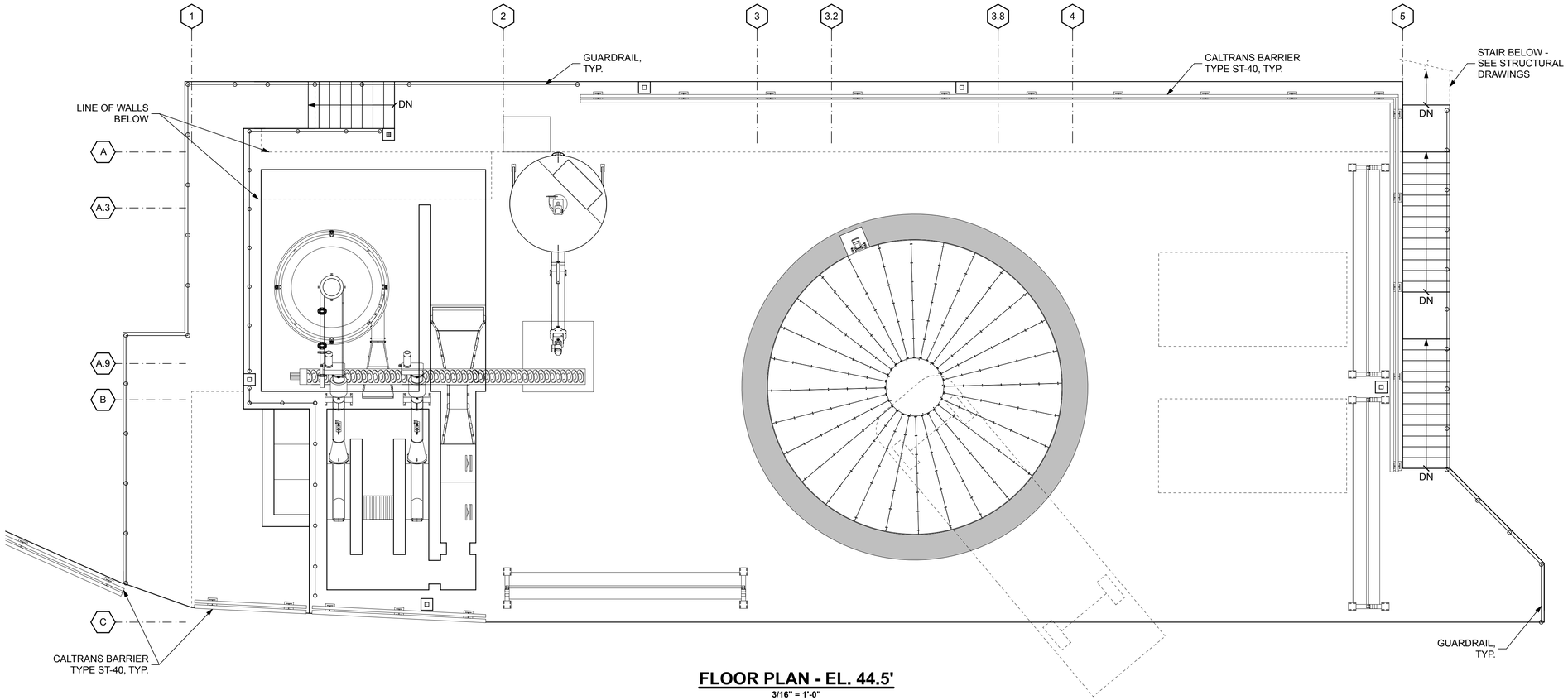

FLOOR PLAN - EL. 44.5'

3/16" = 1'-0"

NOTE:
SEE STRUCTURAL AND MECHANICAL DRAWINGS FOR ADDITIONAL INFORMATION.

RECORD DRAWING
THIS RECORD DRAWING HAS BEEN PREPARED FROM THE ORIGINAL CONTRACT DOCUMENTS SIGNED AND SEALED BY THE RESPONSIBLE ENGINEER OF RECORD. ADDITIONAL INFORMATION HAS BEEN PROVIDED BY OTHERS TO REPRESENT AS-CONSTRUCTED CONDITION AND IS SHOWN ON THESE RECORD DRAWINGS. THE RESPONSIBLE ENGINEER OF RECORD CANNOT VERIFY THE ACCURACY OF THE AS-CONSTRUCTED CONDITION INFORMATION REPRESENTED ON THE RECORD DRAWINGS.

0" — 1"
VERIFY SCALES
BAR IS ONE INCH LONG ON FULL SIZE DRAWING. IF NOT ONE INCH LONG ON THIS DRAWING, ADJUST SCALES ACCORDINGLY

Burks Toma Architects

Woodard & Curran

REV	DATE	BY	APVD	DESCRIPTION
1	7/22	MG	KB	RECORD DRAWING

DESIGNED	K. BURKS
DRAWN	M. GILROY
CHECKED	K. BURKS

SUBMITTED: MARK TAKEMOTO, RMC PROJECT ENGINEER CE-64369

APPROVED: STEVE CLARY, RMC ENGINEER CE-30318

SAUSALITO • MARIN CITY SANITARY DISTRICT

TREATMENT AND WET WEATHER FLOW UPGRADE

HEADWORK/GRIT AND EQ BASIN ARCHITECTURAL FLOOR PLAN

DWG NO	A100-2
SHEET NO	58 OF 226
PROJ NO	055-006
DATE	JULY 2022

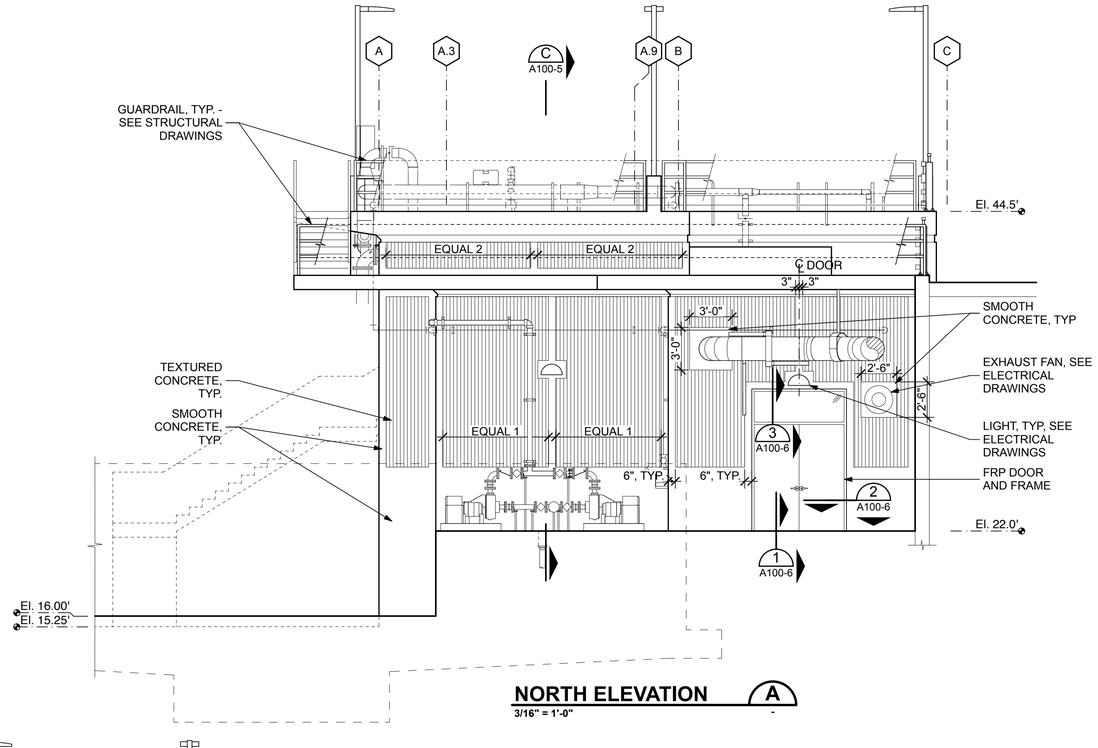

NORTH ELEVATION A

3/16" = 1'-0"

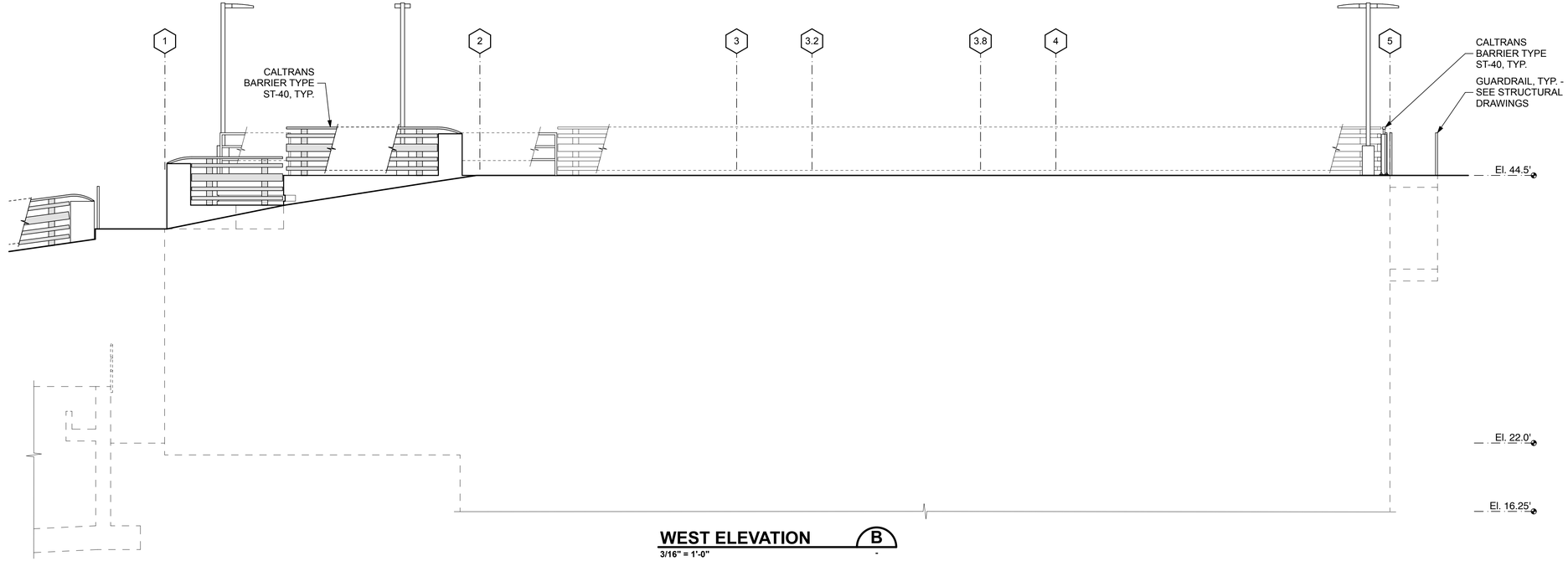

WEST ELEVATION B

3/16" = 1'-0"

NOTE:
SEE STRUCTURAL AND MECHANICAL DRAWINGS FOR ADDITIONAL INFORMATION.

RECORD DRAWING
THIS RECORD DRAWING HAS BEEN PREPARED FROM THE ORIGINAL CONTRACT DOCUMENTS SIGNED AND SEALED BY THE RESPONSIBLE ENGINEER OF RECORD. ADDITIONAL INFORMATION HAS BEEN PROVIDED BY OTHERS TO REPRESENT AS-CONSTRUCTED CONDITION AND IS SHOWN ON THESE RECORD DRAWINGS. THE RESPONSIBLE ENGINEER OF RECORD CANNOT VERIFY THE ACCURACY OF THE AS-CONSTRUCTED CONDITION INFORMATION REPRESENTED ON THE RECORD DRAWINGS.

0" — 1" VERIFY SCALES BAR IS ONE INCH LONG ON FULL SIZE DRAWING. IF NOT ONE INCH LONG ON THIS DRAWING, ADJUST SCALES ACCORDINGLY

BurksToma Architects

Woodard & Curran

REV	DATE	BY	APVD	DESCRIPTION
1	7/22	MG	KB	RECORD DRAWING

DESIGNED	K. BURKS
DRAWN	M. GILROY
CHECKED	K. BURKS

SUBMITTED: MARK TAKEMOTO, RMC PROJECT ENGINEER CE-64369

APPROVED: STEVE CLARY, RMC ENGINEER CE-30318

SAUSALITO • MARIN CITY SANITARY DISTRICT

TREATMENT AND WET WEATHER FLOW UPGRADE

HEADWORK/GRIT AND EQ BASIN ARCHITECTURAL ELEVATIONS

DWG NO	A100-3
SHEET NO	59 OF 226
PROJ NO	055-006
DATE	JULY 2022

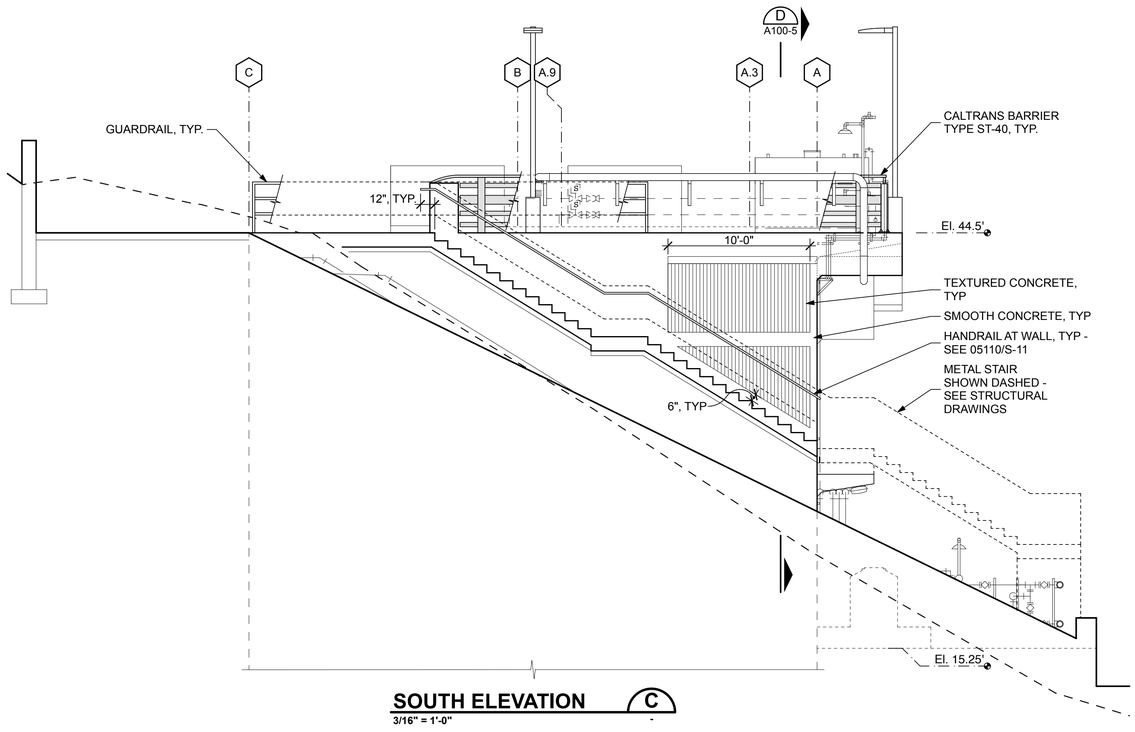

SOUTH ELEVATION C

3/16" = 1'-0"

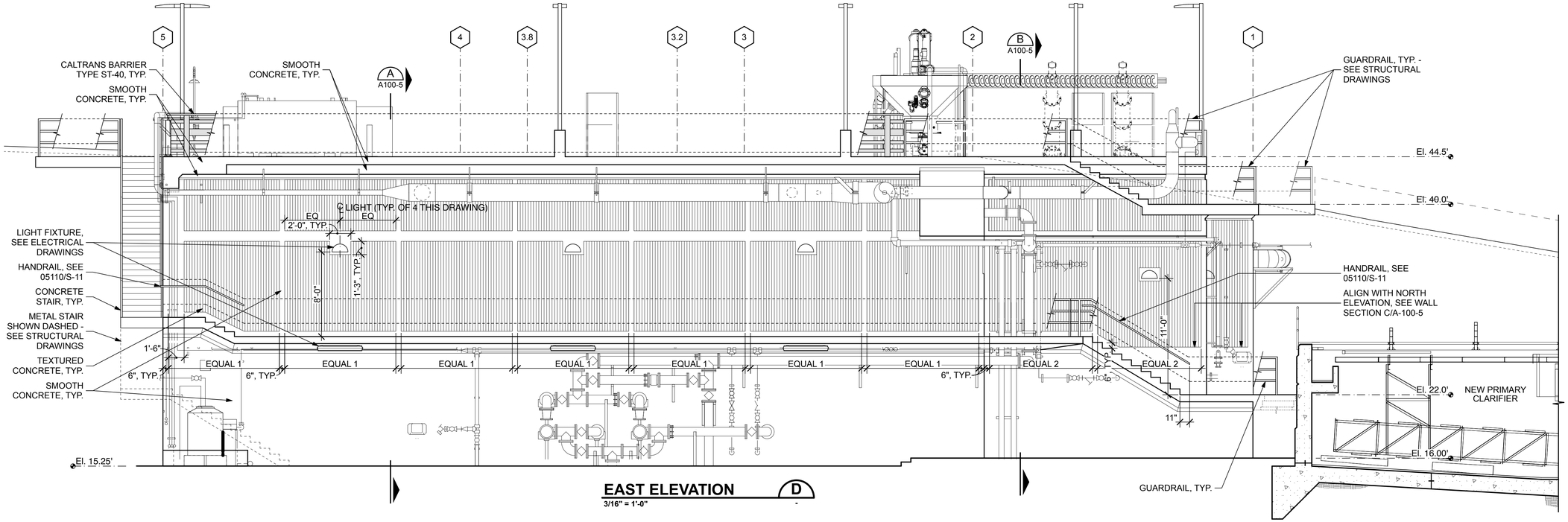

EAST ELEVATION D

3/16" = 1'-0"

NOTE:
SEE STRUCTURAL AND MECHANICAL DRAWINGS FOR ADDITIONAL INFORMATION.

RECORD DRAWING
THIS RECORD DRAWING HAS BEEN PREPARED FROM THE ORIGINAL CONTRACT DOCUMENTS SIGNED AND SEALED BY THE RESPONSIBLE ENGINEER OF RECORD. ADDITIONAL INFORMATION HAS BEEN PROVIDED BY OTHERS TO REPRESENT AS-CONSTRUCTED CONDITION AND IS SHOWN ON THESE RECORD DRAWINGS. THE RESPONSIBLE ENGINEER OF RECORD CANNOT VERIFY THE ACCURACY OF THE AS-CONSTRUCTED CONDITION INFORMATION REPRESENTED ON THE RECORD DRAWINGS.

0" — 1" VERIFY SCALES — BAR IS ONE INCH LONG ON FULL SIZE DRAWING. IF NOT ONE INCH LONG ON THIS DRAWING, ADJUST SCALES ACCORDINGLY

BurksToma Architects

Woodard & Curran

REV	DATE	BY	APVD	DESCRIPTION
1	7/22	MG	KB	RECORD DRAWING

DESIGNED K. BURKS
DRAWN M. GILROY
CHECKED K. BURKS

SUBMITTED: MARK TAKEMOTO
RMC PROJECT ENGINEER CE-64369

APPROVED: STEVE CLARY
RMC ENGINEER CE-30318

SAUSALITO • MARIN CITY SANITARY DISTRICT

TREATMENT AND WET WEATHER FLOW UPGRADE

HEADWORK/GRIT AND EQ BASIN ARCHITECTURAL ELEVATIONS

DWG NO A100-4
SHEET NO 60 OF 226
PROJ NO 055-006
DATE JULY 2022

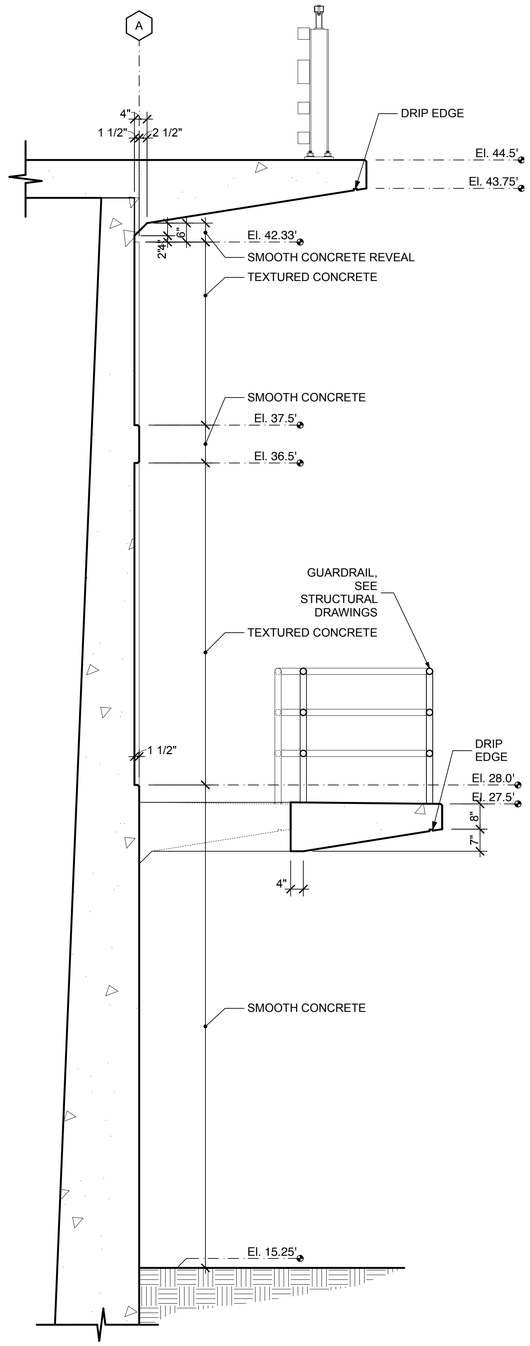

WALL SECTION A

1/2" = 1'-0"

A100-4

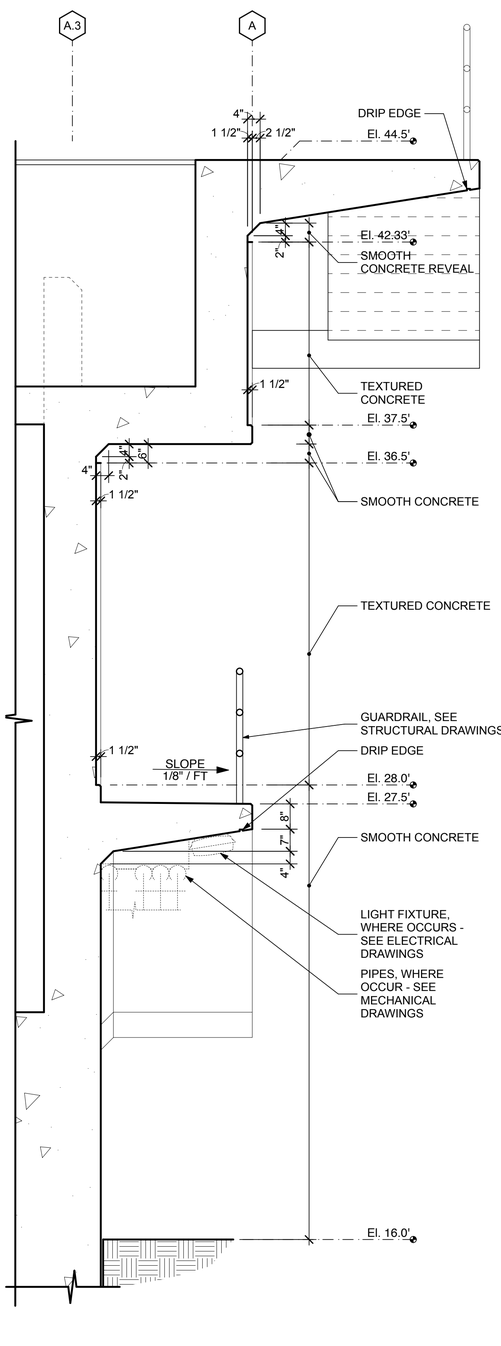

WALL SECTION B

1/2" = 1'-0"

A100-4

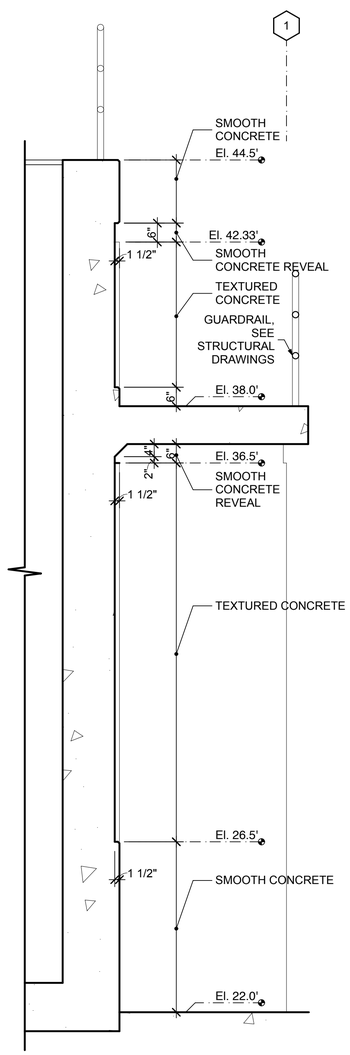

WALL SECTION C

1/2" = 1'-0"

A100-3

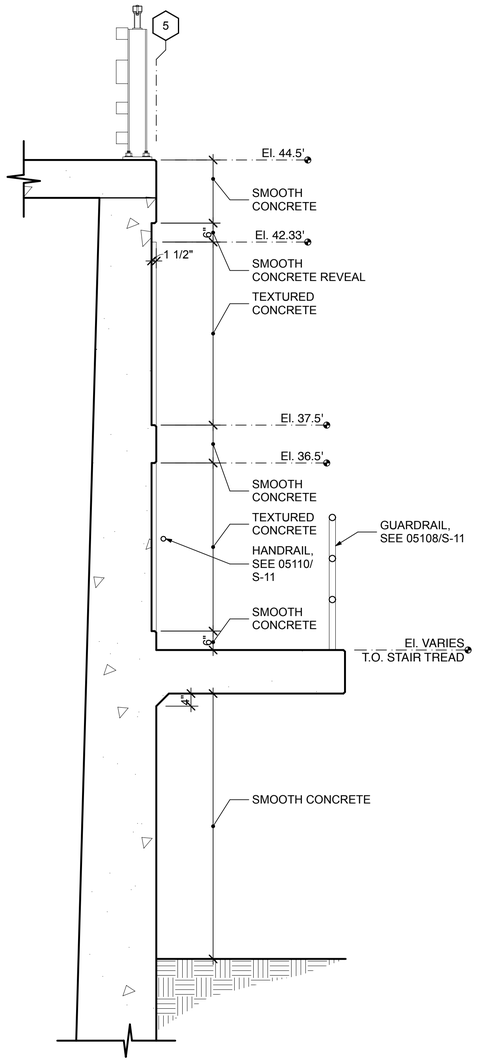

WALL SECTION D

1/2" = 1'-0"

A100-4

NOTE:
SEE STRUCTURAL AND MECHANICAL DRAWINGS FOR ADDITIONAL INFORMATION.

RECORD DRAWING
THIS RECORD DRAWING HAS BEEN PREPARED FROM THE ORIGINAL CONTRACT DOCUMENTS SIGNED AND SEALED BY THE RESPONSIBLE ENGINEER OF RECORD. ADDITIONAL INFORMATION HAS BEEN PROVIDED BY OTHERS TO REPRESENT AS-CONSTRUCTED CONDITION AND IS SHOWN ON THESE RECORD DRAWINGS. THE RESPONSIBLE ENGINEER OF RECORD CANNOT VERIFY THE ACCURACY OF THE AS-CONSTRUCTED CONDITION INFORMATION REPRESENTED ON THE RECORD DRAWINGS.

0" 1" — VERIFY SCALES — BAR IS ONE INCH LONG ON FULL SIZE DRAWING. IF NOT ONE INCH LONG ON THIS DRAWING, ADJUST SCALES ACCORDINGLY

Burks Toma Architects

Woodard & Curran

REV	DATE	BY	APVD	DESCRIPTION
1	7/22	MG	KB	RECORD DRAWING

DESIGNED K. BURKS
DRAWN M. GILROY
CHECKED K. BURKS

SUBMITTED: MARK TAKEMOTO, RMC PROJECT ENGINEER CE-64369
APPROVED: STEVE CLARY, RMC ENGINEER CE-30318

SAUSALITO • MARIN CITY SANITARY DISTRICT

TREATMENT AND WET WEATHER FLOW UPGRADE

HEADWORK/GRIT AND EQ BASIN SECTIONS AND DETAILS

DWG NO A100-5
SHEET NO 61 OF 226
PROJ NO 055-006
DATE JULY 2022

DOOR SCHEDULE

NOTE: ALL DOORS AND WINDOWS SHALL BE OPERABLE FROM THE INSIDE WITHOUT USE OF A KEY OR SPECIAL KNOWLEDGE OR EFFORT PER CBC SECTION 1008.1.8

FRP = FIBERGLASS REINFORCED PLASTIC ALUM = ALUMINUM EXIT = EXIT DEVICE FAC = FACTORY FINISH INS = INSULATED PTD = PAINTED SGL = SINGLE STL = STEEL TEMP = TEMPERED WC = PRIVACY SHADES

NO.	DOOR						FRAME					DETAILS			DOOR HARDWARE		GLAZING	REMARKS	NO.
	WIDTH	HEIGHT	THICK	TYPE	MAT'L	FINISH	WIDTH	HEIGHT	DEPTH	MAT'L	FINISH	HEAD	JAMB	THRESHOLD	GROUP	TYPE			
-	(2)3'-2"	7'-6"	1 3/4"	A	FRP	FAC	6'-8"	10'-0"	6"	FRP	FAC	3/A100-6	2/A100-6	1/A100-6	1	LEVER	INS	1), 2), 3)	-
-	2'-8"	6'-10"	1 3/4"	B	FRP	FAC	3'-0"	7'-0"	6"	FRP	FAC	-	-	-	2	LEVER	INS	1), 2), 3), 4)	-

1) REQUIRED EXIT DOOR.
2) ALL GLAZING TO BE TEMPERED AS INDICATED BY 'T'.
3) DOOR AND FRAME DIMENSIONS ARE NOMINAL, V.I.F.
4) NEW DOOR AND FRAME IN EXISTING OPENING ON SOUTH END OF EAST ELEVATION AT CONTROL BUILDING.

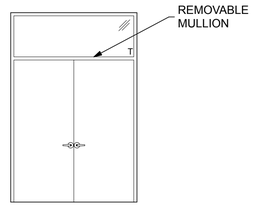

A

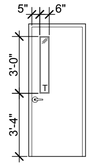

B

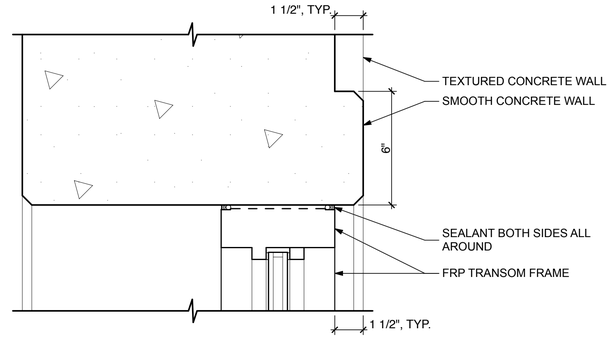

FRP DOOR - HEAD 3 A100-3
1/2" = 1'-0"

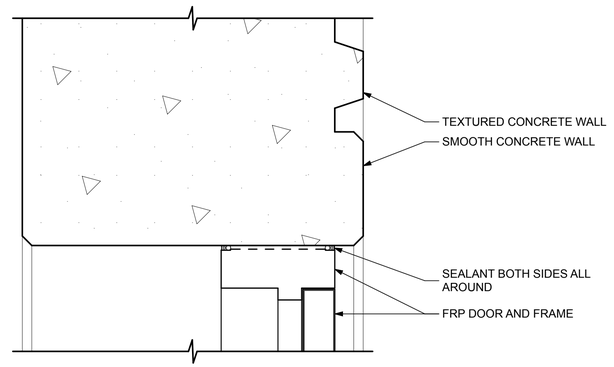

FRP DOOR - JAMB 2 A100-3
1/2" = 1'-0"

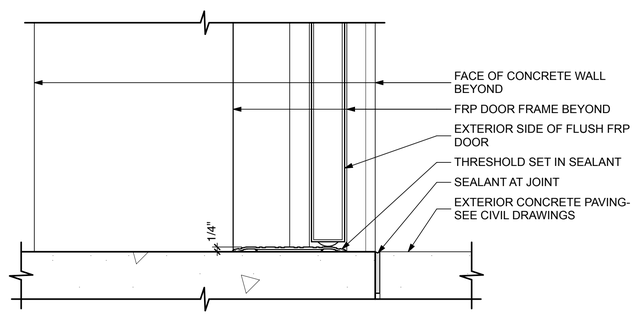

FRP DOOR - THRESHOLD 1 A100-3
1/2" = 1'-0"

NOTE:
SEE STRUCTURAL AND MECHANICAL DRAWINGS FOR ADDITIONAL INFORMATION.

RECORD DRAWING
THIS RECORD DRAWING HAS BEEN PREPARED FROM THE ORIGINAL CONTRACT DOCUMENTS SIGNED AND SEALED BY THE RESPONSIBLE ENGINEER OF RECORD. ADDITIONAL INFORMATION HAS BEEN PROVIDED BY OTHERS TO REPRESENT AS-CONSTRUCTED CONDITION AND IS SHOWN ON THESE RECORD DRAWINGS. THE RESPONSIBLE ENGINEER OF RECORD CANNOT VERIFY THE ACCURACY OF THE AS-CONSTRUCTED CONDITION INFORMATION REPRESENTED ON THE RECORD DRAWINGS.

0" — 1" — VERIFY SCALES — BAR IS ONE INCH LONG ON FULL SIZE DRAWING. IF NOT ONE INCH LONG ON THIS DRAWING, ADJUST SCALES ACCORDINGLY

Burks Toma Architects

Woodard & Curran

REV	DATE	BY	APVD	DESCRIPTION
1	7/22	MG	KB	RECORD DRAWING

DESIGNED K. BURKS
DRAWN M. GILROY
CHECKED K. BURKS

SUBMITTED: MARK TAKEMOTO, RMC PROJECT ENGINEER CE-64369
APPROVED: STEVE CLARY, RMC ENGINEER CE-30318

SAUSALITO • MARIN CITY SANITARY DISTRICT

TREATMENT AND WET WEATHER FLOW UPGRADE

HEADWORK/GRIT AND EQ BASIN SCHEDULES AND DETAILS

DWG NO A100-6
SHEET NO 62 OF 226
PROJ NO 055-006
DATE JULY 2022

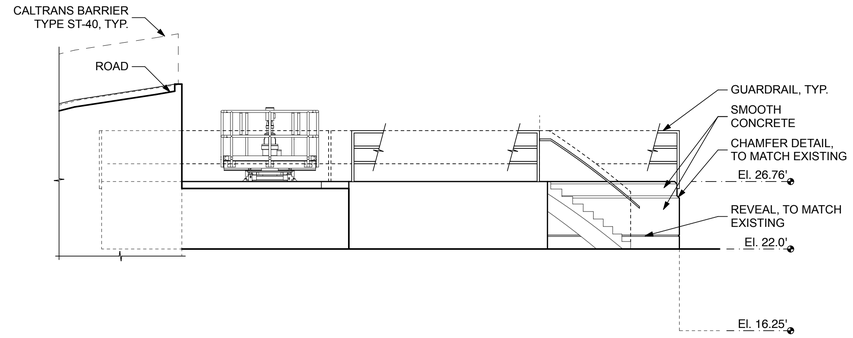

WEST ELEVATION A
3/16" = 1'-0"

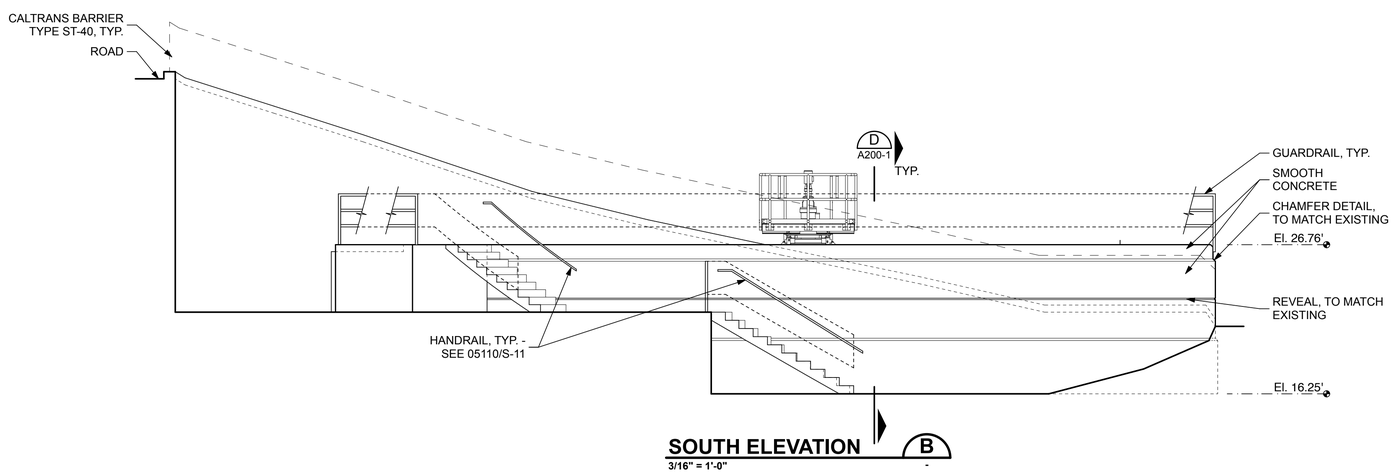

SOUTH ELEVATION B
3/16" = 1'-0"

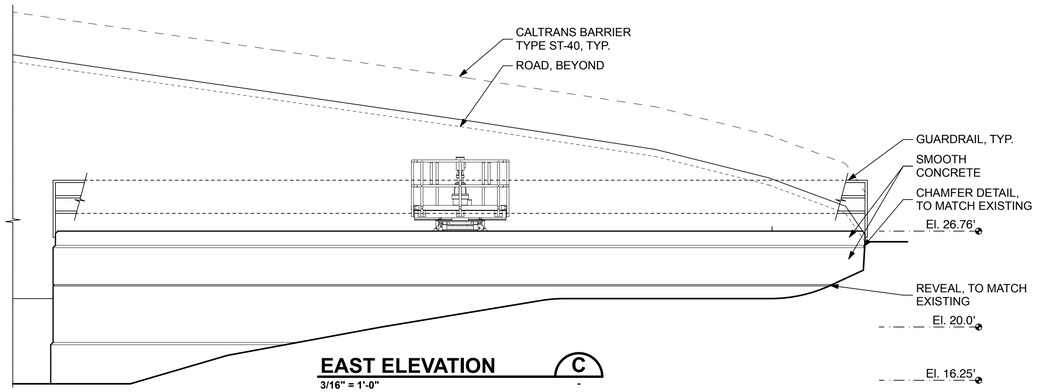

EAST ELEVATION C
3/16" = 1'-0"

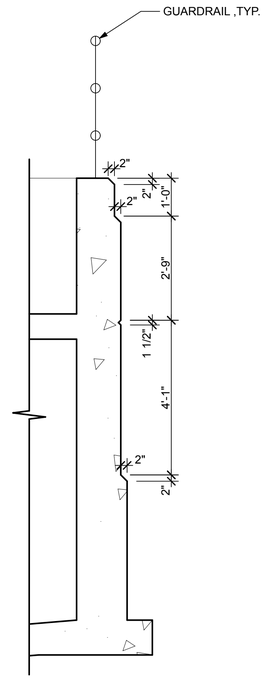

WALL SECTION D
A200-1
1/2" = 1'-0"

NOTE:
SEE STRUCTURAL AND MECHANICAL DRAWINGS FOR ADDITIONAL INFORMATION.

RECORD DRAWING
THIS RECORD DRAWING HAS BEEN PREPARED FROM THE ORIGINAL CONTRACT DOCUMENTS SIGNED AND SEALED BY THE RESPONSIBLE ENGINEER OF RECORD. ADDITIONAL INFORMATION HAS BEEN PROVIDED BY OTHERS TO REPRESENT AS-CONSTRUCTED CONDITION AND IS SHOWN ON THESE RECORD DRAWINGS. THE RESPONSIBLE ENGINEER OF RECORD CANNOT VERIFY THE ACCURACY OF THE AS-CONSTRUCTED CONDITION INFORMATION REPRESENTED ON THE RECORD DRAWINGS.

0" 1"
VERIFY SCALES
BAR IS ONE INCH
LONG ON FULL
SIZE DRAWING.
IF NOT ONE INCH
LONG ON THIS
DRAWING, ADJUST
SCALES ACCORDINGLY

Burks Toma Architects

Woodard & Curran

REV	DATE	BY	APVD	DESCRIPTION
1	7/22	MG	KB	RECORD DRAWING

DESIGNED K. BURKS
DRAWN M. GILROY
CHECKED K. BURKS

SUBMITTED: MARK TAKEMOTO
RMC PROJECT ENGINEER CE-64369

APPROVED: STEVE CLARY
RMC ENGINEER CE-30318

SAUSALITO • MARIN CITY SANITARY DISTRICT

TREATMENT AND WET WEATHER FLOW UPGRADE

PRIMARY CLARIFIER ARCHITECTURAL ELEVATIONS

DWG NO A200-1
SHEET NO 63 OF 226
PROJ NO 055-006
DATE JULY 2022

REMOVED FROM CONTRACT

PLANT LIST

SYMBOL	QTY	ABBR.	SCIENTIFIC NAME	COMMON NAME	SIZE	SPACING	WATER USE
TREES							
	5	QUE AGR	Quercus agrifolia	Coast Live Oak	15 Gal	20' O.C.	L
	5	UMB CAL	Umbellularia californica	California Bay Laurel	15 Gal	20' O.C.	L
	10	SUBTOTAL					
REVEG PLANTINGS							
	170	ART CAL	*Artemisia californica*	California Sagebrush	1 Gal	12" O.C.	L
	51	BAC PIG	*Baccharis pilularis 'Pigeon Point'*	Coyote Brush Pigeon Point	1 Gal	24 " O.C.	L
	51	BAC CON	*Baccharis pilularis 'Consanguinea'*	Dwarf Coyote Brush	1 Gal	24" O.C.	L
	51	CEA HOR	*Ceanothus griseus horizontalis*	Carmel Creeper	1 Gal	24" O.C.	L
	51	HET ARB	*Hetromeles arbutifolia*	Toyon	1 Gal	24" O.C.	L
	170	LON HIS	*Lonicera hispidula*	California Honeysuckle	1 Gal	12" O.C.	L
	51	RIB AUR	*Ribes aureum*	Golden Penny	1 Gal	24" O.C.	L
	170	SAL MEL	*Salvia mellifera repens*	Creeping Black Sage	1 Gal	12" O.C.	L
	765	SUBTOTAL					
FFRNS							
	252	POL CAL	*Polypodium californicum*	California Polypody	1 Gal	18" O.C.	M
	252	SUBTOTAL					

PLANT NOTES

1. PLANTING TO RECEIVE MULCH PER SPECS.
2. PLANT QUANTITY TOTALS ARE PROVIDED FOR CONTRACTOR'S CONVENIENCE ONLY. CONTRACTOR TO VERIFY ALL PLANT QUANTITIES.
3. SEE PLANT LIST FOR PLANT SPACING.
4. SHRUBS ARE TO EXTEND UNDER TREE PLANTINGS FOR FULL COVERAGE. SPACE SHRUBS 18" FROM TREES.

CONCRETE GUARDRAIL, SEE STRUCTURAL DWGS

2 / L20-5 PICNIC TABLE, SEE SPECS

LIMIT OF WORK

5'

MOWING AREA

BOLLARDS, SEE CIVIL DWGS

TERMINATE CHAINLINK FENCE

2 | QUE AGR | 15 GAL

NEW PRIMARY CLARIFIER

CONCRETE SWALE, SEE CIVIL DWGS.

3 | UMB CAL | 15 GAL

NEW HEADWORDS AND EQ STRUCTURE

ENERGY DISSIPATION STRUCTURE SEE CIVIL DWGS

SHOTCRETE WALL, SEE CIVIL DWGS

CONCRETE V-DITCH, SEE CIVIL DWGS

1 / L20-3

LIMIT OF WORK

PLANTING AREA 1 (619 SF)
148 PLANTS, SEE PLANT LIST FOR QUANTITY PERCENTAGES

SHOTCRETE WALL

1 / L20-2

BEGINNING OF SHOTCRETE WALL

EXISTING RETAINING WALL

L20-1

LIMIT OF WORK

PLANTING AREA 3 (291 SF)
66 PLANTS, SEE PLANT LIST FOR QUANTITY PERCENTAGES

PLANTING AREA 2 (457 SF)
110 PLANTS, SEE PLANT LIST FOR QUANTITY PERCENTAGES

REVEG PLANTING AREA , TYP

EXISTING TREES TO REMAIN, TYP.

EXISTING STORM DRAIN OUTFLOW

EXISTING INFLUENT SEWER

3 | QUE AGR | 15 GAL

CHAINLINK FENCE. CONTRACTOR TO FIELD LOCATE FENCE LAYOUT BASED ON CONDITIONS AFTER THE SHOTCRETE WALL HAS BEEN CONSTRUCTED.

1 / L20-5 1 / L20-4

EXISTING 2" WATER LINE

2 | UMB CAL | 15 GAL

FENCE TO CONTINUE UNTIL EXISTING WALL HEIGHT IS LESS THAN 2'-6"

8" FLEX PIPE

EXISTING RETAINING WALL

GM BOARD BUILDING

CONC SLAB

OFFICE

AC PATCH

MACHINE SHOP

RIGHT OF WAY

N

0 5 10 20

FILENAME: L1 Landscape Site Plan 7-26-22 02:43pm cto || XREFS:| X-SMCSD-TBLK | Plant Notes | Plant List | RHAA-Base | X-Topo Survey new | 0055-006-C100-1 | X-Treatment Plant site plan | X-Site |<<--

Last Saved By: cto 7-26-22 11:12am

RECORD DRAWING

THIS RECORD DRAWING HAS BEEN PREPARED FROM THE ORIGINAL CONTRACT DOCUMENTS SIGNED AND SEALED BY THE RESPONSIBLE ENGINEER OF RECORD. ADDITIONAL INFORMATION HAS BEEN PROVIDED BY OTHERS TO REPRESENT AS-CONSTRUCTED CONDITION AND IS SHOWN ON THESE RECORD DRAWINGS. THE RESPONSIBLE ENGINEER OF RECORD CANNOT VERIFY THE ACCURACY OF THE AS-CONSTRUCTED CONDITION INFORMATION REPRESENTED ON THE RECORD DRAWINGS.

0" 1" — VERIFY SCALES — BAR IS ONE INCH LONG ON FULL SIZE DRAWING. IF NOT ONE INCH LONG ON THIS DRAWING, ADJUST SCALES ACCORDINGLY

rhaa SAN FRANCISCO MILL VALLEY 225 Miller Avenue, Mill Valley, CA 94941 P 415.383.9333

Woodard & Curran

REV	DATE	BY	APVD	DESCRIPTION
1	07/22	CT	TV	RECORD DRAWING

DESIGNED	MD
DRAWN	CA
CHECKED	BL

SUBMITTED: MARK TAKEMOTO, RMC PROJECT ENGINEER CE-64369

APPROVED: STEVE CLARY, RMC ENGINEER CE-30318

SAUSALITO · MARIN CITY SANITARY DISTRICT

TREATMENT AND WET WEATHER FLOW UPGRADE

LANDSCAPE CONSTRUCTION AND PLANTING PLAN

DWG NO	L1
SHEET NO	64 OF 226
PROJ NO	055-006
DATE	JULY 2022

REMOVED FROM CONTRACT

LIMIT OF WORK

252 | POL CAL
1 GAL

18" CMP CULVERT 12" ± MIN. COVER

18" CMP CULVERT 24" ± COVER

EXISTING CULVERT

EXISTING CULVERT

2" WIDE VALLEY GUTTER

CATCH BASIN (TYP)

SHIPPING CONTAINER (FLAMMABLE LIQUIDS)

SHIPPING CONTAINER

PLYWOOD SHED

COVERED CONC SLAB

GARAGE

CONC SLAB

FUEL STATION

GARDEN BUILDING

MACHINE SHOP

LANDING

12" TREE AT DECK

AT GROUND

12" LEANING

N

0 5 10 20

FILENAME: L1-1 Landscape Site Plan | 7-26-22 | 02:49pm | cto | XREFS: | X-SMCSD-TBLK | RHAA-Base | X-Topo Survey new | 0055-006-C100-1 | X-Treatment Plant site plan | X-Site <<--

Last Saved By: cto 4-26-17 09:25am

RECORD DRAWING

THIS RECORD DRAWING HAS BEEN PREPARED FROM THE ORIGINAL CONTRACT DOCUMENTS SIGNED AND SEALED BY THE RESPONSIBLE ENGINEER OF RECORD. ADDITIONAL INFORMATION HAS BEEN PROVIDED BY OTHERS TO REPRESENT AS-CONSTRUCTED CONDITION AND IS SHOWN ON THESE RECORD DRAWINGS. THE RESPONSIBLE ENGINEER OF RECORD CANNOT VERIFY THE ACCURACY OF THE AS-CONSTRUCTED CONDITION INFORMATION REPRESENTED ON THE RECORD DRAWINGS.

0" 1"
— VERIFY SCALES —
BAR IS ONE INCH LONG ON FULL SIZE DRAWING. IF NOT ONE INCH LONG ON THIS DRAWING, ADJUST SCALES ACCORDINGLY

rhaa
SAN FRANCISCO MILL VALLEY
225 Miller Avenue, Mill Valley, CA 94941
T 415 383 7433

Woodard & Curran

REV	DATE	BY	APVD	DESCRIPTION
1	07/22	CT	TV	RECORD DRAWING

DESIGNED	MD
DRAWN	CA
CHECKED	BL

SUBMITTED: MARK TAKEMOTO
RMC PROJECT ENGINEER CE-64369

APPROVED: STEVE CLARY
RMC ENGINEER CE-30318

SAUSALITO · MARIN CITY SANITARY DISTRICT

TREATMENT AND WET WEATHER FLOW UPGRADE

PLANTING PLAN

DWG NO	L1-1
SHEET NO	65 OF 226
PROJ NO	055-006
DATE	JULY 2022

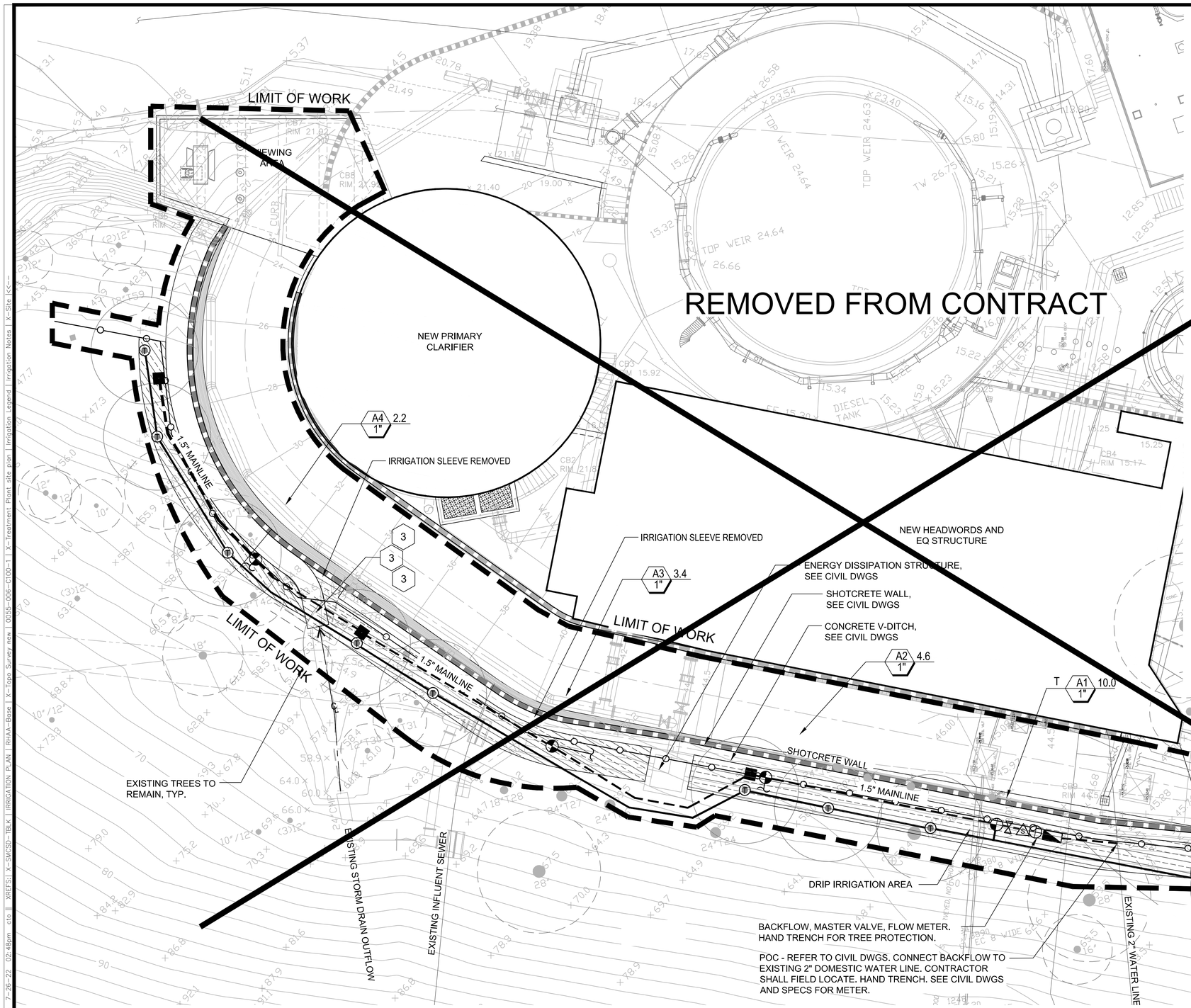

IRRIGATION LEGEND

		COMMENTS
GPM	GALLONS PER MINUTE	
POC	POINT OF CONNECTION	
	BACKFLOW PREVENTOR	1-1/2" REDUCED PRESSURE BACKFLOW PREVENTER WITH CHECK VALVES AND PRESSURE REGULATOR, LEAD FREE
	MASTER VALVE	CAST IRON BODY, DIAPHRAGM TYPE VALVE, BATTERY POWERED
S	FLOW SENSOR	INLINE, NON-MAGNETIC IMPELLER TYPE, LINE SIZE
	DRIP CONTROL VALVE	CAST IRON BODY, DIAPHRAGM TYPE VALVE, PRESSURE REGULATOR, BATTERY POWERED
	BUBBLER CONTROL VALVE	CAST IRON BODY, DIAPHRAGM TYPE VALVE, BATTERY POWERED
T	TREE BUBBLER	2 BUBBLERS PER TREE
	QUICK COUPLING VALVE	TWO PIECE, LINE SIZE
	BALL VALVE	LINE SIZE
	MAINLINE PIPE	1-1/2" SCHEDULE 40 PVC
	LATERAL LINE PIPE	SCHEDULE 40 PVC
3	SLEEVE AND SIZE	SCHEDULE 40 PVC
	DRIP IRRIGATION	
A1 0.0 / 1"	VALVE NUMBER GALLON PER MINUTE OF ZONE VALVE SIZE	

PIPE SIZE CHART

SIZE	SCH 40
1"	9-12
1 1/4"	13-21
1 1/2"	22-30
2"	31-49
2 1/2"	50-70

IRRIGATION NOTES

1. THIS PLAN IS DIAGRAMMATIC. ALL IRRIGATION PIPING AND EQUIPMENT SHOWN WITHIN PAVED AREAS IS FOR DESIGN CLARIFICATION ONLY AND SHALL BE INSTALLED IN PLANTING AREAS WHERE POSSIBLE. AVOID CONFLICTS WITH NEW PLANTING, NEW SITE ELEMENTS.
2. ALL EQUIPMENT SHALL CONFORM TO THE SPECIFICATIONS.
3. ALL EQUIPMENT SHALL CONFORM TO THE SAUSALITO REQUIREMENTS.
4. CONTRACTOR SHALL NOT DAMAGE OR REMOVE EXISTING IRRIGATION EQUIPMENT. NOTIFY OWNER'S REPRESENTATIVE IMMEDIATELY OF ANY CONFLICTS.
5. THE IRRIGATION SYSTEM IS DESIGNED TO OPERATE AT 40 GPM.
6. ALL PLANTING AREAS TO BE IRRIGATED WITH DRIP IRRIGATION SYSTEM. ALL PLANTER POCKETS WILL BE IRRIGATED WITH ONE EMITTER PER SHRUB.

FILENAME: L1-2 Irrigation Plan 7-26-22 02:48pm cto || XREFS: X-SMCSD-TBLK | IRRIGATION PLAN | RHAA-Base | X-Topo Survey new | 0055-006-C100-1 | X-Treatment Plant site plan | Irrigation Legend | Irrigation Notes | X-Site <<--

Last Saved By: cto 4-26-17 09:27am

RECORD DRAWING
THIS RECORD DRAWING HAS BEEN PREPARED FROM THE ORIGINAL CONTRACT DOCUMENTS SIGNED AND SEALED BY THE RESPONSIBLE ENGINEER OF RECORD. ADDITIONAL INFORMATION HAS BEEN PROVIDED BY OTHERS TO REPRESENT AS-CONSTRUCTED CONDITION AND IS SHOWN ON THESE RECORD DRAWINGS. THE RESPONSIBLE ENGINEER OF RECORD CANNOT VERIFY THE ACCURACY OF THE AS-CONSTRUCTED CONDITION INFORMATION REPRESENTED ON THE RECORD DRAWINGS.

0" 1" — VERIFY SCALES — BAR IS ONE INCH LONG ON FULL SIZE DRAWING. IF NOT ONE INCH LONG ON THIS DRAWING, ADJUST SCALES ACCORDINGLY

rhaa — SAN FRANCISCO MILL VALLEY — 225 Miller Avenue, Mill Valley, CA 94941 — F 415.383.7423

Woodard & Curran

REV	DATE	BY	APVD	DESCRIPTION
1	07/22	CT	TV	RECORD DRAWING

DESIGNED MD
DRAWN CA
CHECKED BL

SUBMITTED: MARK TAKEMOTO, RMC PROJECT ENGINEER CE-64369
APPROVED: STEVE CLARY, RMC ENGINEER CE-30318

SAUSALITO · MARIN CITY SANITARY DISTRICT

TREATMENT AND WET WEATHER FLOW UPGRADE

IRRIGATION PLAN

DWG NO L1-2
SHEET NO 66 OF 226
PROJ NO 055-006
DATE JULY 2022

REMOVED FROM CONTRACT

DRIP IRRIGATION SYSTEM.
CONNECT CONTROL VALVE AT
QUICK COUPLER AT SOUTHWEST
CORNER OF BUILDING, SEE SPECS.

A5 4.0
1"

LIMIT OF WORK

18" CMP
CULVERT 12" ±
MIN. COVER

18" CMP CULVERT
24" ± COVER

EXISTING CULVERT

EXISTING CULVERT

2" WIDE VALLEY GUTTER

CATCH BASIN (TYP)

SHIPPING CONTAINER
(FLAMMABLE LIQUIDS)

PLYWOOD
SHED

COVERED
CONC. SLAB

GARAGE

CONC.
SLAB

FUEL
STATION

GARDEN
BUILDING

MACHINE
SHOP

LANDING

12" TREE
AT DECK

AT GROUND

12" LEANING

N

0 5 10 20

FILENAME: L1-3 Irrigation Plan 7-26-22 02:46pm cto || XREFS:| X-SMCSD-TBLK | IRRIGATION PLAN | RHAA-Base | X-Topo Survey new | 0055-006-C100-1 | X-Treatment Plant site plan | X-Site |<<--

Last Saved By: cto 4-26-17 09:29am

RECORD DRAWING

THIS RECORD DRAWING HAS BEEN PREPARED FROM THE ORIGINAL CONTRACT DOCUMENTS SIGNED AND SEALED BY THE RESPONSIBLE ENGINEER OF RECORD. ADDITIONAL INFORMATION HAS BEEN PROVIDED BY OTHERS TO REPRESENT AS-CONSTRUCTED CONDITION AND IS SHOWN ON THESE RECORD DRAWINGS. THE RESPONSIBLE ENGINEER OF RECORD CANNOT VERIFY THE ACCURACY OF THE AS-CONSTRUCTED CONDITION INFORMATION REPRESENTED ON THE RECORD DRAWINGS.

0" 1"
VERIFY SCALES
BAR IS ONE INCH
LONG ON FULL
SIZE DRAWING.
IF NOT ONE INCH
LONG ON THIS
DRAWING, ADJUST
SCALES ACCORDINGLY

rhaa
SAN FRANCISCO MILL VALLEY
225 Miller Avenue, Mill Valley, CA 94941
P 415.383.1453

Woodard & Curran

REV	DATE	BY	APVD	DESCRIPTION
1	07/22	CT	TV	RECORD DRAWING

DESIGNED	MD
DRAWN	CA
CHECKED	BL

SUBMITTED: MARK TAKEMOTO
RMC PROJECT ENGINEER CE-64369

APPROVED: STEVE CLARY
RMC ENGINEER CE-30318

SAUSALITO · MARIN CITY SANITARY DISTRICT

TREATMENT AND WET WEATHER FLOW UPGRADE

IRRIGATION PLAN

DWG NO	L1-3
SHEET NO	67 OF 226
PROJ NO	055-006
DATE	JULY 2022

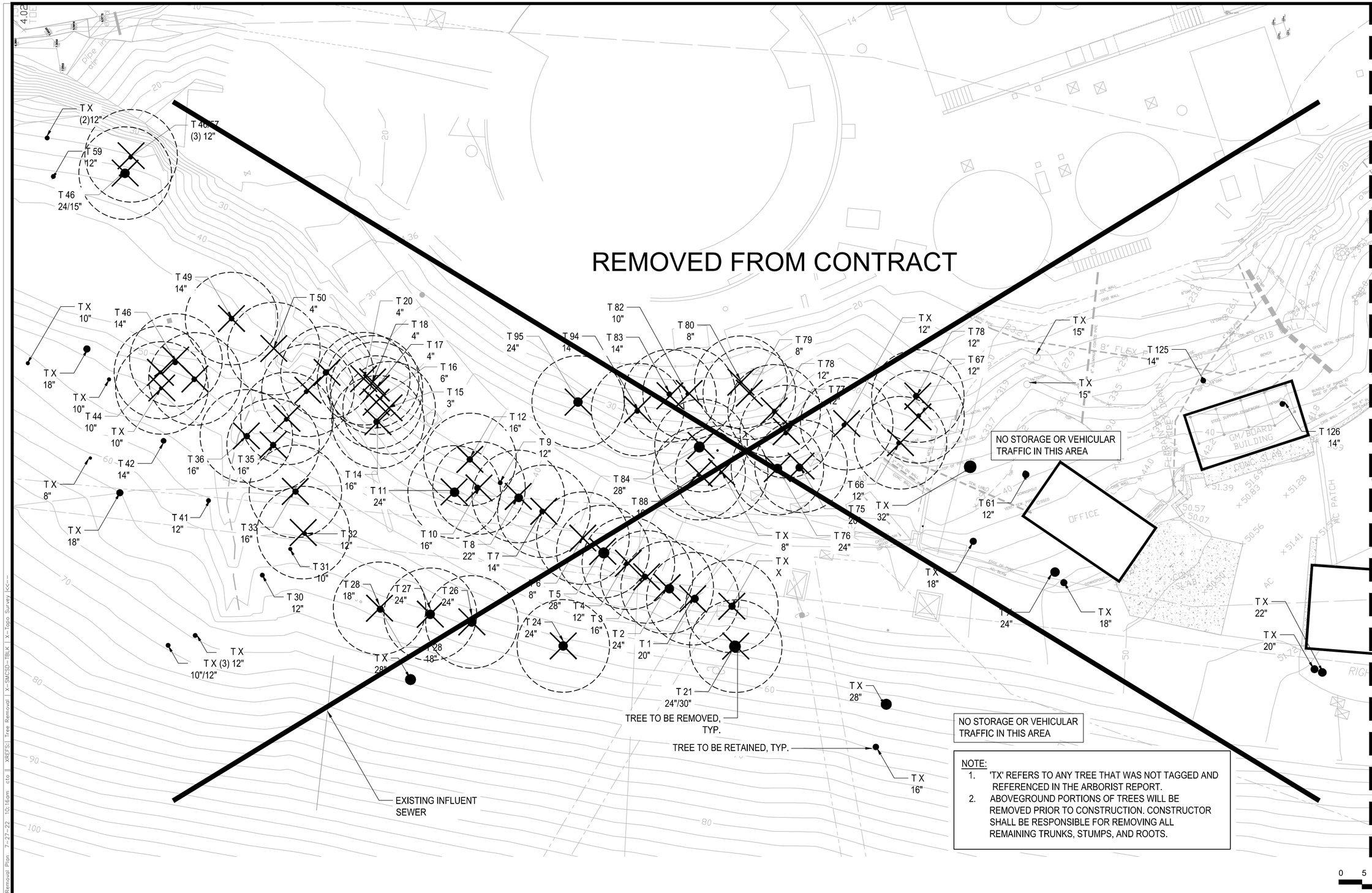

NOTE:
1. 'TX' REFERS TO ANY TREE THAT WAS NOT TAGGED AND REFERENCED IN THE ARBORIST REPORT.
2. ABOVEGROUND PORTIONS OF TREES WILL BE REMOVED PRIOR TO CONSTRUCTION. CONSTRUCTOR SHALL BE RESPONSIBLE FOR REMOVING ALL REMAINING TRUNKS, STUMPS, AND ROOTS.

FILENAME: L10-1 Tree Removal Plan 7-27-22 10:16am cto XREFS: Tree Removal X-SMCSD-TBLK X-Topo Survey

RECORD DRAWING
THIS RECORD DRAWING HAS BEEN PREPARED FROM THE ORIGINAL CONTRACT DOCUMENTS SIGNED AND SEALED BY THE RESPONSIBLE ENGINEER OF RECORD. ADDITIONAL INFORMATION HAS BEEN PROVIDED BY OTHERS TO REPRESENT AS-CONSTRUCTED CONDITION AND IS SHOWN ON THESE RECORD DRAWINGS. THE RESPONSIBLE ENGINEER OF RECORD CANNOT VERIFY THE ACCURACY OF THE AS-CONSTRUCTED CONDITION INFORMATION REPRESENTED ON THE RECORD DRAWINGS.

0" 1"
VERIFY SCALES
BAR IS ONE INCH LONG ON FULL SIZE DRAWING. IF NOT ONE INCH LONG ON THIS DRAWING, ADJUST SCALES ACCORDINGLY

rhaa
SAN FRANCISCO MILL VALLEY
225 Miller Avenue, Mill Valley, CA 94941
P 415.383.5433

Woodard & Curran

REV	DATE	BY	APVD	DESCRIPTION
△				
△				
△				
△				
△	07/22	CT	TV	RECORD DRAWING

DESIGNED	MD
DRAWN	CA
CHECKED	BL

SUBMITTED: MARK TAKEMOTO
RMC PROJECT ENGINEER CE-64369

APPROVED: STEVE CLARY
RMC ENGINEER CE-30318

SAUSALITO · MARIN CITY SANITARY DISTRICT

TREATMENT AND WET WEATHER FLOW UPGRADE

TREE REMOVAL PLAN

DWG NO	L10-1
SHEET NO	68 OF 226
PROJ NO	055-006
DATE	JULY 2022

Last Saved By: cto 7-26-22 02:50pm

NOTE:
1. 'TX' REFERS TO ANY TREE THAT WAS NOT TAGGED AND REFERENCED IN THE ARBORIST REPORT.
2. ABOVEGROUND PORTIONS OF TREES WILL BE REMOVED PRIOR TO CONSTRUCTION. CONSTRUCTOR SHALL BE RESPONSIBLE FOR REMOVING ALL REMAINING TRUNKS, STUMPS, AND ROOTS.

REMOVED FROM CONTRACT

TREE TO BE RETAINED, TYP.

TREE TO BE REMOVED, TYP.

CRITICAL STRUCTURAL ROOT ZONE OF TREES, TYP.

T X 12"

T X 6"

T X 18"

T X 10"

T X 12"

T X 19"

T X 18"

T 125 14"

T 75 20"

NO STORAGE OR VEHICULAR TRAFFIC IN THIS AREA

NO STORAGE OR VEHICULAR TRAFFIC IN THIS AREA

NO STORAGE OR VEHICULAR TRAFFIC IN THIS AREA

MATCHLINE. SEE SHEET L10-1

N

0 5 10 20

FILENAME: L10-2_Tree Removal Plan 7-27-22 10:20am cto || XREFS: | Tree Removal | X-SMCSD-TBLK | X-Topo Survey |<<--

Last Saved By: cto 7-26-22 03:05pm

RECORD DRAWING
THIS RECORD DRAWING HAS BEEN PREPARED FROM THE ORIGINAL CONTRACT DOCUMENTS SIGNED AND SEALED BY THE RESPONSIBLE ENGINEER OF RECORD. ADDITIONAL INFORMATION HAS BEEN PROVIDED BY OTHERS TO REPRESENT AS-CONSTRUCTED CONDITION AND IS SHOWN ON THESE RECORD DRAWINGS. THE RESPONSIBLE ENGINEER OF RECORD CANNOT VERIFY THE ACCURACY OF THE AS-CONSTRUCTED CONDITION INFORMATION REPRESENTED ON THE RECORD DRAWINGS.

0" — 1" VERIFY SCALES — BAR IS ONE INCH LONG ON FULL SIZE DRAWING. IF NOT ONE INCH LONG ON THIS DRAWING, ADJUST SCALES ACCORDINGLY

rhaa SAN FRANCISCO MILL VALLEY 335 Miller Avenue, Mill Valley, CA 94941 T 415.383.1620 F 415.383.1433

Woodard & Curran

REV	DATE	BY	APVD	DESCRIPTION
1	07/22	CT	TV	RECORD DRAWING

DESIGNED MD
DRAWN CA
CHECKED BL

SUBMITTED: MARK TAKEMOTO, RMC PROJECT ENGINEER CE-64369

APPROVED: STEVE CLARY, RMC ENGINEER CE-30318

SAUSALITO · MARIN CITY SANITARY DISTRICT

TREATMENT AND WET WEATHER FLOW UPGRADE

TREE REMOVAL PLAN

DWG NO L10-2
SHEET NO 69 OF 226
PROJ NO 055-006
DATE JULY 2022

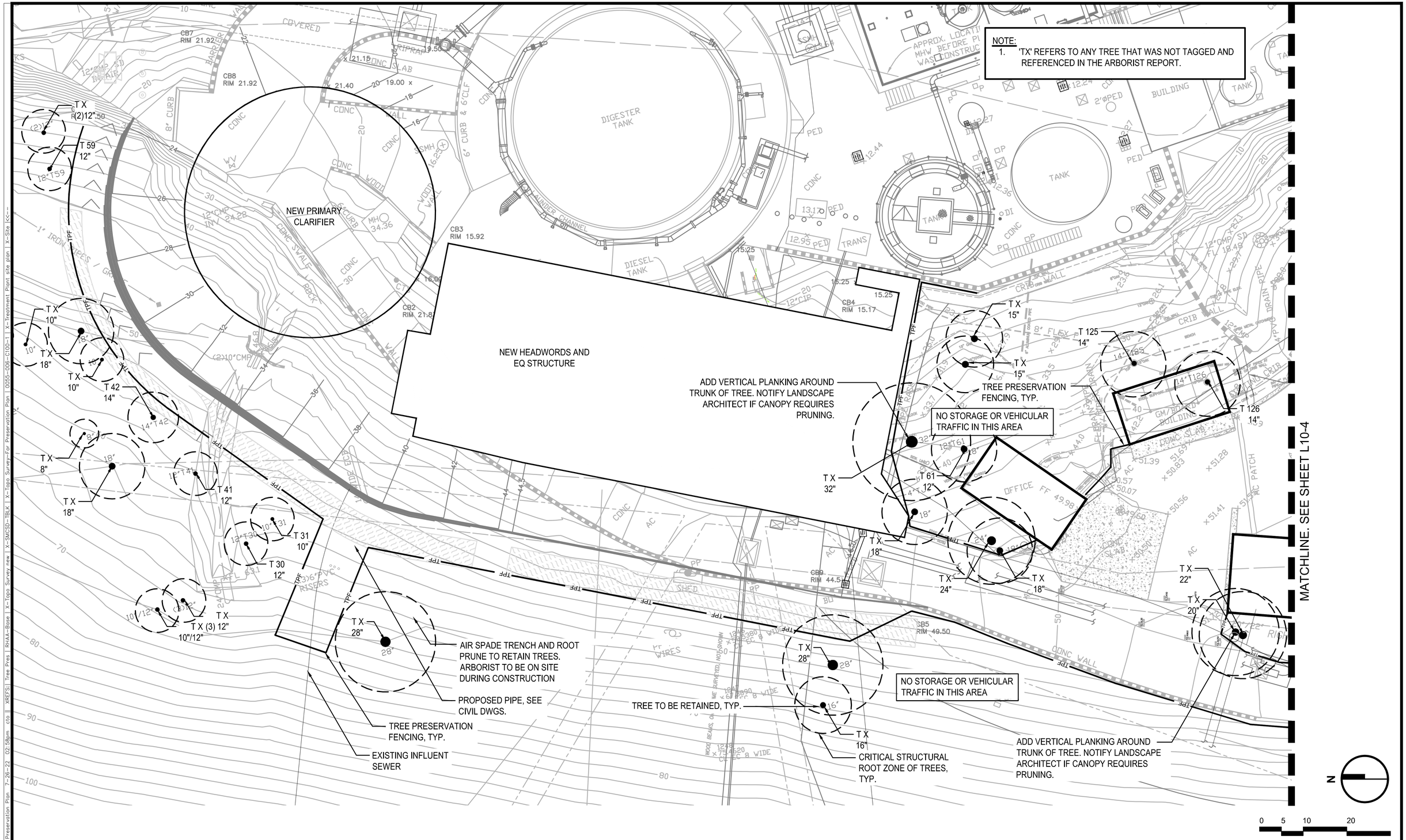

FILENAME: L10-3 Tree Preservation Plan 7-26-22 02:58pm cto XREFS: Tree Pres RHAA-Base X-Topo Survey new X-SMCSD-TBLK X-Topo Survey-For Preservation Plan 0055-006-C100-1 X-Treatment Plant site plan X-Site

RECORD DRAWING

THIS RECORD DRAWING HAS BEEN PREPARED FROM THE ORIGINAL CONTRACT DOCUMENTS SIGNED AND SEALED BY THE RESPONSIBLE ENGINEER OF RECORD. ADDITIONAL INFORMATION HAS BEEN PROVIDED BY OTHERS TO REPRESENT AS-CONSTRUCTED CONDITION AND IS SHOWN ON THESE RECORD DRAWINGS. THE RESPONSIBLE ENGINEER OF RECORD CANNOT VERIFY THE ACCURACY OF THE AS-CONSTRUCTED CONDITION INFORMATION REPRESENTED ON THE RECORD DRAWINGS.

0" 1"
VERIFY SCALES
BAR IS ONE INCH LONG ON FULL SIZE DRAWING. IF NOT ONE INCH LONG ON THIS DRAWING, ADJUST SCALES ACCORDINGLY

rhaa
SAN FRANCISCO MILL VALLEY
225 Miller Avenue, Mill Valley, CA 94941
P 415 383 1433

Woodard & Curran

REV	DATE	BY	APVD	DESCRIPTION
	07/22	CT	TV	RECORD DRAWING

DESIGNED	MD
DRAWN	CA
CHECKED	BL

SUBMITTED: MARK TAKEMOTO
RMC PROJECT ENGINEER CE-64369

APPROVED: STEVE CLARY
RMC ENGINEER CE-30318

SAUSALITO · MARIN CITY SANITARY DISTRICT

TREATMENT AND WET WEATHER FLOW UPGRADE

TREE PRESERVATION PLAN

DWG NO	L10-3
SHEET NO	70 OF 226
PROJ NO	055-006
DATE	JULY 2022

Last Saved By: chelsea.andersson 4-26-17 09:32am

NOTE:
1. 'TX' REFERS TO ANY TREE THAT WAS NOT TAGGED AND REFERENCED IN THE ARBORIST REPORT.

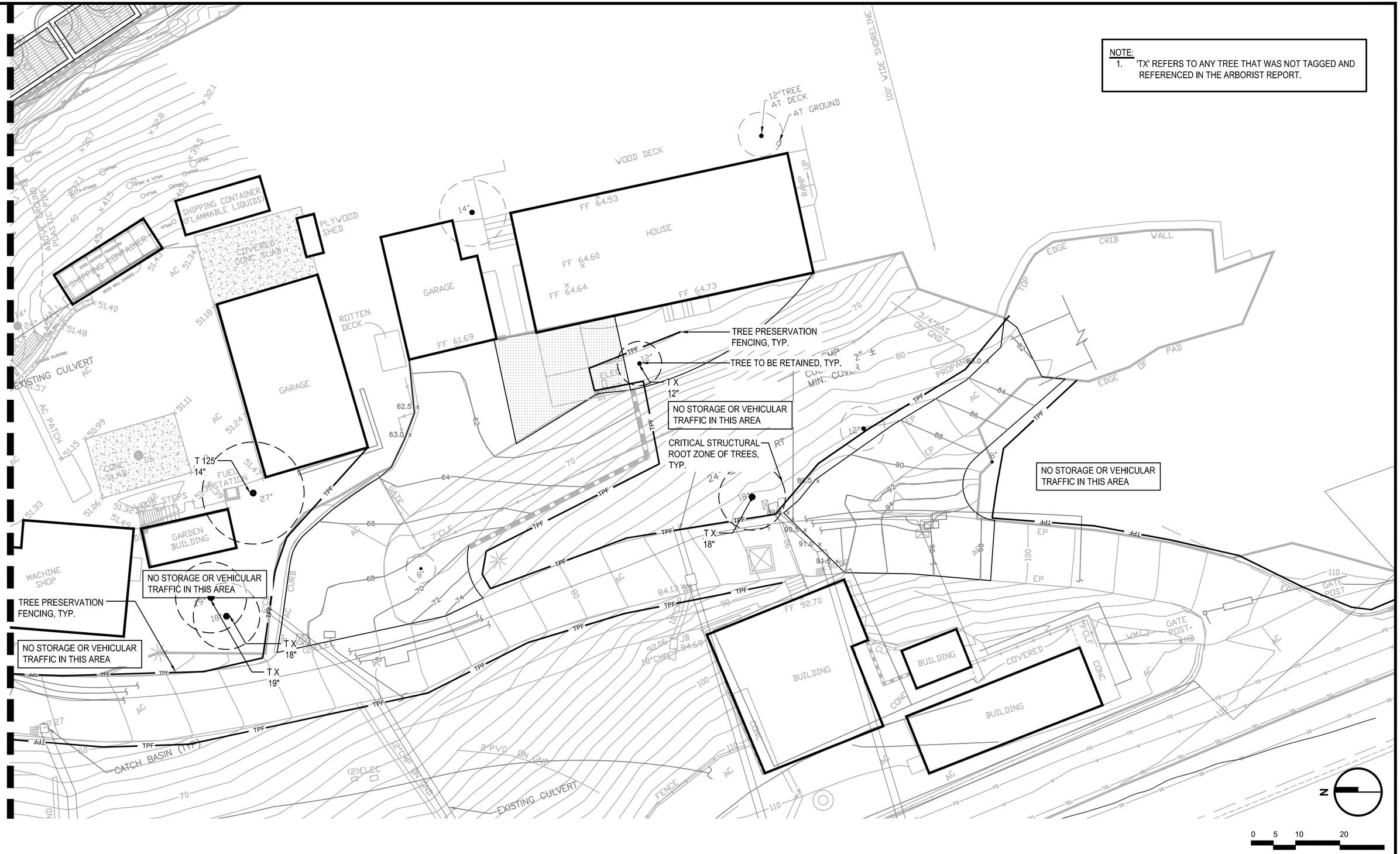

RECORD DRAWING
THIS RECORD DRAWING HAS BEEN PREPARED FROM THE ORIGINAL CONTRACT DOCUMENTS SIGNED AND SEALED BY THE RESPONSIBLE ENGINEER OF RECORD. ADDITIONAL INFORMATION HAS BEEN PROVIDED BY OTHERS TO REPRESENT AS-CONSTRUCTED CONDITION AND IS SHOWN ON THESE RECORD DRAWINGS. THE RESPONSIBLE ENGINEER OF RECORD CANNOT VERIFY THE ACCURACY OF THE AS-CONSTRUCTED CONDITION INFORMATION REPRESENTED ON THE RECORD DRAWINGS.

0" 1"
VERIFY SCALES
BAR IS ONE INCH LONG ON FULL SIZE DRAWING. IF NOT ONE INCH LONG ON THIS DRAWING, ADJUST SCALES ACCORDINGLY

rhaa
SAN FRANCISCO MILL VALLEY
225 Miller Avenue, Mill Valley, CA 94941
P 415.383.5433

Woodard & Curran

REV	DATE	BY	APVD	DESCRIPTION
1	07/22	CT	TV	RECORD DRAWING

DESIGNED	MD
DRAWN	CA
CHECKED	BL

SUBMITTED: MARK TAKEMOTO
RMC PROJECT ENGINEER CE-64369

APPROVED: STEVE CLARY
RMC ENGINEER CE-30318

SAUSALITO · MARIN CITY SANITARY DISTRICT

TREATMENT AND WET WEATHER FLOW UPGRADE

TREE PRESERVATION PLAN

DWG NO	L10-4
SHEET NO	71 OF 226
PROJ NO	055-006
DATE	JULY 2022

FILENAME: L10-4 Tree Preservation Plan 7-27-22 09:10am cto || XREFS:| Tree Pres | RHAA-Base | X-Topo Survey new | X-SMCSD-TBLK | X-Topo Survey-For Preservation Plan | 0055-006-C100-1 | X-Treatment Plant site plan | X-Site |<<--

Last Saved By: cto 7-26-22 05:23pm

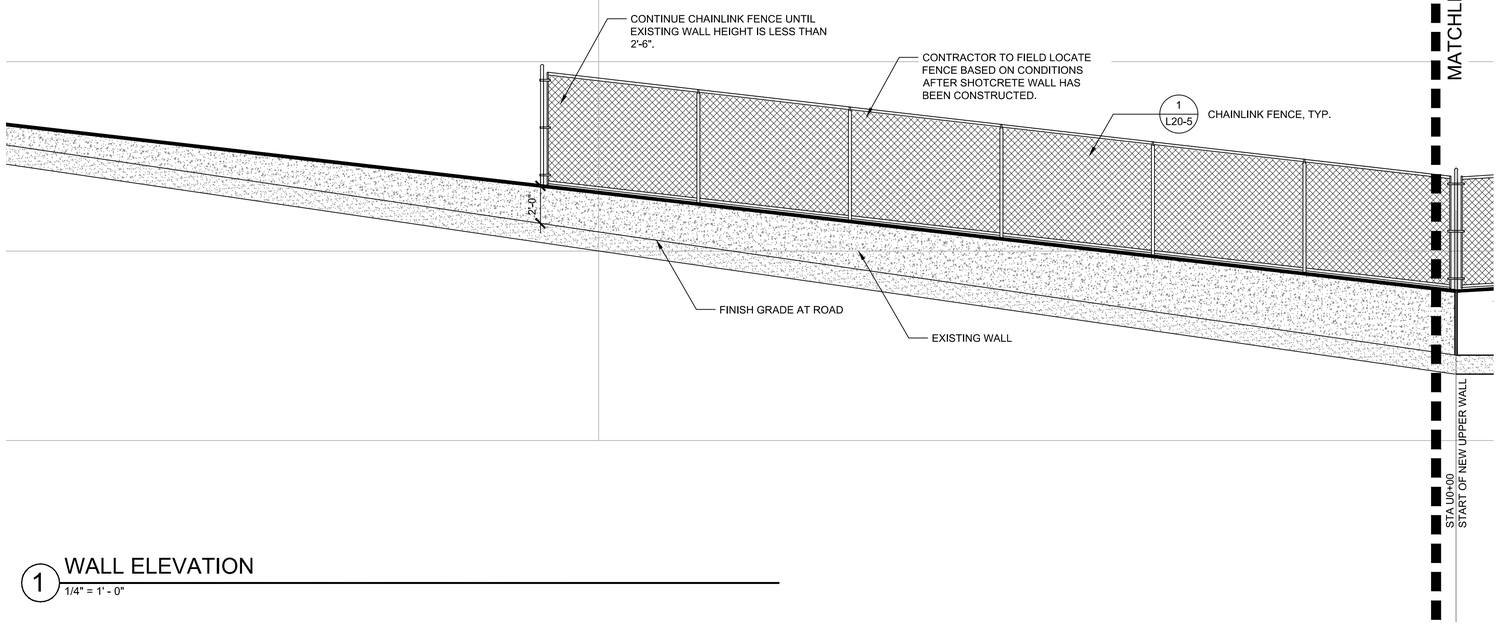

1 WALL ELEVATION
1/4" = 1' - 0"

RECORD DRAWING
THIS RECORD DRAWING HAS BEEN PREPARED FROM THE ORIGINAL CONTRACT DOCUMENTS SIGNED AND SEALED BY THE RESPONSIBLE ENGINEER OF RECORD. ADDITIONAL INFORMATION HAS BEEN PROVIDED BY OTHERS TO REPRESENT AS-CONSTRUCTED CONDITION AND IS SHOWN ON THESE RECORD DRAWINGS. THE RESPONSIBLE ENGINEER OF RECORD CANNOT VERIFY THE ACCURACY OF THE AS-CONSTRUCTED CONDITION INFORMATION REPRESENTED ON THE RECORD DRAWINGS.

0" — 1" — VERIFY SCALES — BAR IS ONE INCH LONG ON FULL SIZE DRAWING. IF NOT ONE INCH LONG ON THIS DRAWING, ADJUST SCALES ACCORDINGLY

rhaa
SAN FRANCISCO MILL VALLEY
225 Miller Avenue, Mill Valley, CA 94941
T 415.383.1620

Woodard & Curran

REV	DATE	BY	APVD	DESCRIPTION
1	07/22	CT	TV	RECORD DRAWING

DESIGNED	MD
DRAWN	CA
CHECKED	BL

SUBMITTED: MARK TAKEMOTO
RMC PROJECT ENGINEER CE-64369

APPROVED: STEVE CLARY
RMC ENGINEER CE-30318

SAUSALITO · MARIN CITY SANITARY DISTRICT

TREATMENT AND WET WEATHER FLOW UPGRADE

WALL ELEVATION

DWG NO	L20-1
SHEET NO	72 OF 226
PROJ NO	055-006
DATE	JULY 2022

FILENAME: L20-1 Wall Elevation 7-27-22 11:40am cto || XREFS: X-SMCSD-TBLK | Wall Elevation | WALL-2 | X-Wall |<<--

Last Saved By: cto 7-27-22 09:16am

MATCHLINE. SEE SHEET L20-1

MATCHLINE. SEE SHEET L20-3

CONTRACTOR TO FIELD LOCATE FENCE BASED ON CONDITIONS AFTER SHOTCRETE WALL HAS BEEN CONSTRUCTED.

1 / L20-5 CHAINLINK FENCE, TYP.

TOP OF WALL

INLET STRUCTURE BEHIND WALL AND UNDER ROAD

EXISTING WALL TO REMAIN

FINAL WALL AND SOIL NAIL LAYOUT PER CDC 11 AND CDC 4. SEE CIVIL PLANS

WEEP HOLES AT 12" O.C., TYP., SEE CIVIL DWGS

FINISH GRADE AT ROAD

STA U0+00
START OF NEW UPPER WALL

STA U1+09
NEW INFLUENT STRUCTURE

24"x20" TEE,
STA 2+00.00
INV 38.39

2 WALL ELEVATION

1/4" = 1' - 0"

FILENAME: L20-2 Wall Elevation 7-27-22 10:21am cto || XREFS: | X-SMCSD-TBLK | Wall Elevation | WALL-2 | X-Wall |<<--

RECORD DRAWING

THIS RECORD DRAWING HAS BEEN PREPARED FROM THE ORIGINAL CONTRACT DOCUMENTS SIGNED AND SEALED BY THE RESPONSIBLE ENGINEER OF RECORD. ADDITIONAL INFORMATION HAS BEEN PROVIDED BY OTHERS TO REPRESENT AS-CONSTRUCTED CONDITION AND IS SHOWN ON THESE RECORD DRAWINGS. THE RESPONSIBLE ENGINEER OF RECORD CANNOT VERIFY THE ACCURACY OF THE AS-CONSTRUCTED CONDITION INFORMATION REPRESENTED ON THE RECORD DRAWINGS.

0" 1" — VERIFY SCALES — BAR IS ONE INCH LONG ON FULL SIZE DRAWING. IF NOT ONE INCH LONG ON THIS DRAWING, ADJUST SCALES ACCORDINGLY

rhaa
SAN FRANCISCO MILL VALLEY
225 Miller Avenue, Mill Valley, CA 94941
T 415.383.1620

Woodard & Curran

REV	DATE	BY	APVD	DESCRIPTION
1	07/22	CT	TV	RECORD DRAWING

DESIGNED	MD
DRAWN	CA
CHECKED	BL

SUBMITTED: MARK TAKEMOTO, RMC PROJECT ENGINEER CE-64369

APPROVED: STEVE CLARY, RMC ENGINEER CE-30318

SAUSALITO · MARIN CITY SANITARY DISTRICT

TREATMENT AND WET WEATHER FLOW UPGRADE

WALL ELEVATION

DWG NO	L20-2
SHEET NO	73 OF 226
PROJ NO	055-006
DATE	JULY 2022

Last Saved By: cto 7-27-22 09:17am

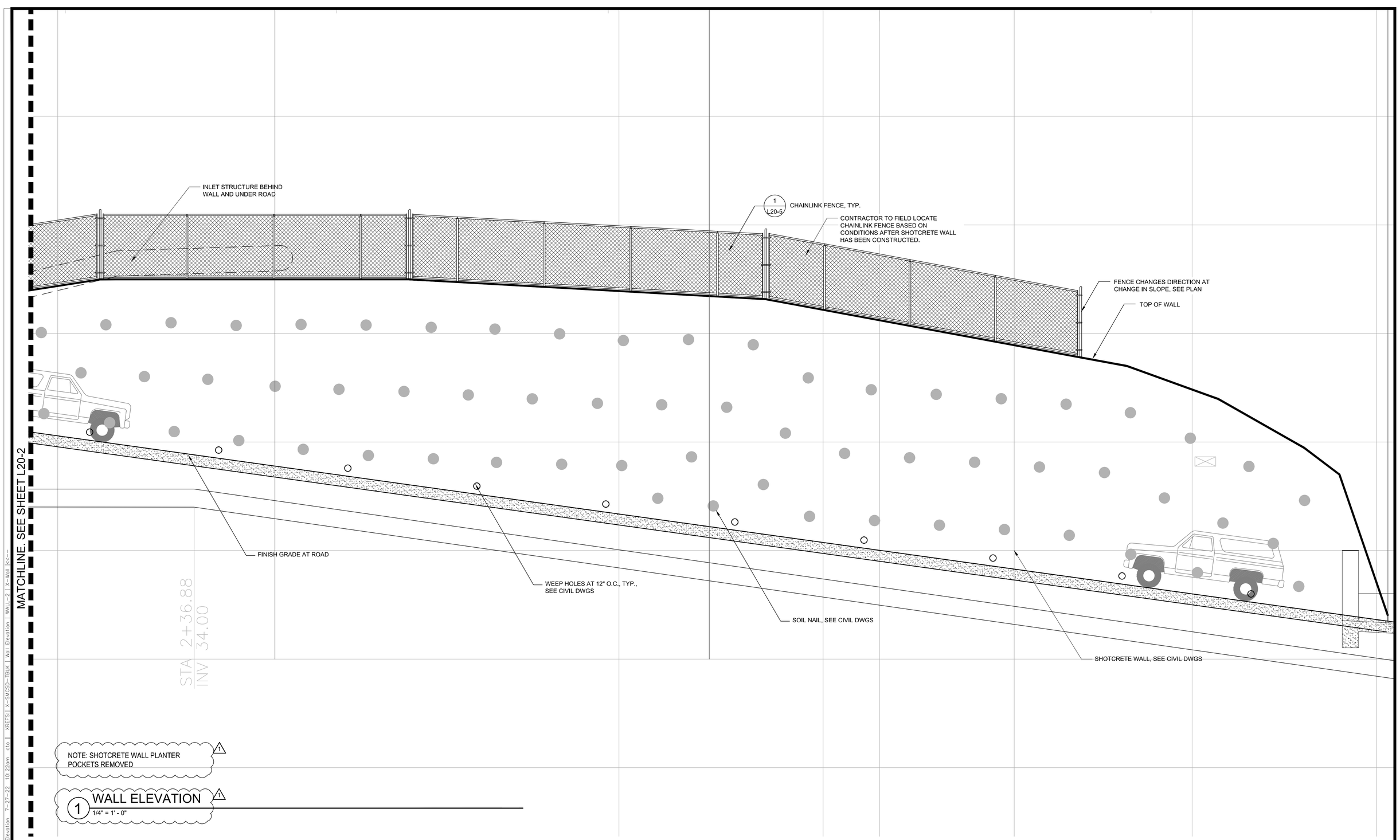

NOTE: SHOTCRETE WALL PLANTER POCKETS REMOVED 1

1 WALL ELEVATION 1
1/4" = 1' - 0"

FILENAME: L20-3 Wall Elevation | 7-27-22 10:22am cto | XREFS: | X-SMCSD-TBLK | Wall Elevation | WALL-2 | X-Wall |<<--

RECORD DRAWING
THIS RECORD DRAWING HAS BEEN PREPARED FROM THE ORIGINAL CONTRACT DOCUMENTS SIGNED AND SEALED BY THE RESPONSIBLE ENGINEER OF RECORD. ADDITIONAL INFORMATION HAS BEEN PROVIDED BY OTHERS TO REPRESENT AS-CONSTRUCTED CONDITION AND IS SHOWN ON THESE RECORD DRAWINGS. THE RESPONSIBLE ENGINEER OF RECORD CANNOT VERIFY THE ACCURACY OF THE AS-CONSTRUCTED CONDITION INFORMATION REPRESENTED ON THE RECORD DRAWINGS.

0" 1" — VERIFY SCALES — BAR IS ONE INCH LONG ON FULL SIZE DRAWING. IF NOT ONE INCH LONG ON THIS DRAWING, ADJUST SCALES ACCORDINGLY

rhaa SAN FRANCISCO MILL VALLEY 325 Miller Avenue, Mill Valley, CA 94941 P 415.383.1422

Woodard & Curran

REV	DATE	BY	APVD	DESCRIPTION
1	07/22	CT	TV	RECORD DRAWING

DESIGNED MD
DRAWN CA
CHECKED BL

SUBMITTED: MARK TAKEMOTO, RMC PROJECT ENGINEER CE-64369
APPROVED: STEVE CLARY, RMC ENGINEER CE-30318

SAUSALITO · MARIN CITY SANITARY DISTRICT

TREATMENT AND WET WEATHER FLOW UPGRADE

WALL ELEVATION

DWG NO L20-3
SHEET NO 74 OF 226
PROJ NO 055-006
DATE JULY 2022

Last Saved By: cto 7-27-22 09:20am

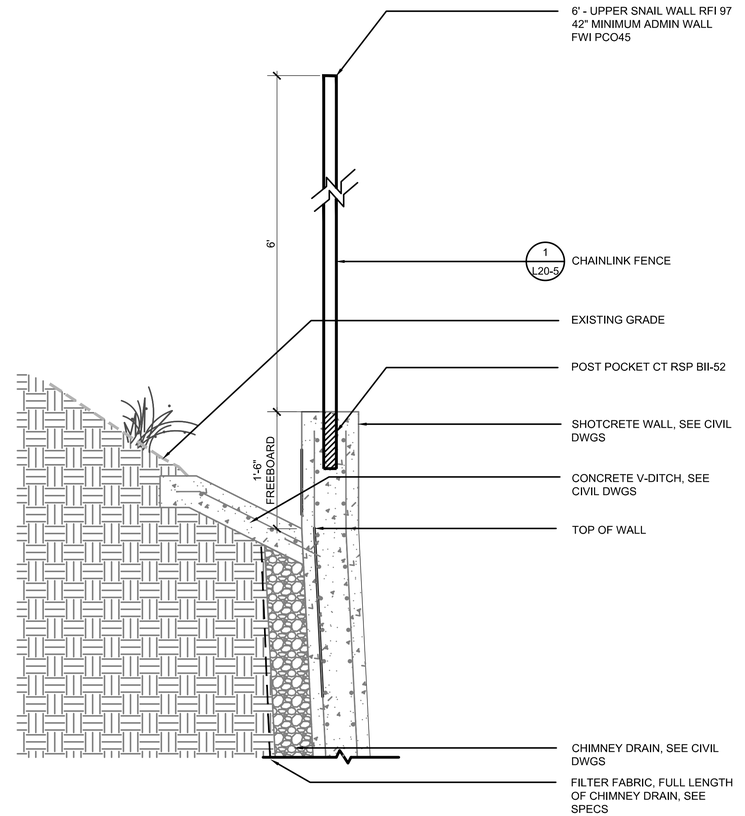

1 CONCRETE V-DITCH WITH FENCE SECTION
1" = 1'-0"

RECORD DRAWING
THIS RECORD DRAWING HAS BEEN PREPARED FROM THE ORIGINAL CONTRACT DOCUMENTS SIGNED AND SEALED BY THE RESPONSIBLE ENGINEER OF RECORD. ADDITIONAL INFORMATION HAS BEEN PROVIDED BY OTHERS TO REPRESENT AS-CONSTRUCTED CONDITION AND IS SHOWN ON THESE RECORD DRAWINGS. THE RESPONSIBLE ENGINEER OF RECORD CANNOT VERIFY THE ACCURACY OF THE AS-CONSTRUCTED CONDITION INFORMATION REPRESENTED ON THE RECORD DRAWINGS.

0" 1"
VERIFY SCALES
BAR IS ONE INCH LONG ON FULL SIZE DRAWING. IF NOT ONE INCH LONG ON THIS DRAWING, ADJUST SCALES ACCORDINGLY

rhaa
SAN FRANCISCO MILL VALLEY
229 Miller Avenue, Mill Valley, CA 94941
P 415 383 1433

Woodard & Curran

REV	DATE	BY	APVD	DESCRIPTION
1	07/22	CT	TV	RECORD DRAWING

DESIGNED	MD
DRAWN	CA
CHECKED	BL

SUBMITTED: MARK TAKEMOTO
RMC PROJECT ENGINEER CE-64369

APPROVED: STEVE CLARY
RMC ENGINEER CE-30318

SAUSALITO · MARIN CITY SANITARY DISTRICT

TREATMENT AND WET WEATHER FLOW UPGRADE

CONSTRUCTION DETAILS

DWG NO	L20-4
SHEET NO	75 OF 226
PROJ NO	055-006
DATE	JULY 2022

FILENAME: L20-4 Wall Section 7-27-22 10:09am cto || XREFS:| X-SMCSD-TBLK | Planter Pockets | Vine Pocket_16 | X-SitePlan |<<--

Last Saved By: cto 4-26-17 09:49am

REMOVED FROM CONTRACT

NOTE:
1. ALL STAINLESS STEEL SHALL BE 316 MARINE GRADE.
2. CONTRACTOR TO SUBMIT FASTENER SAMPLE AND PRODUCT DATA FOR APPROVAL.

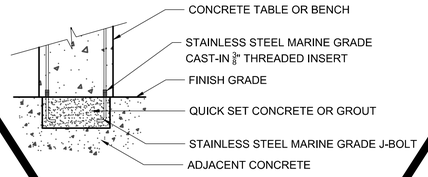

ATTACHMENT ENLARGEMENT
NTS

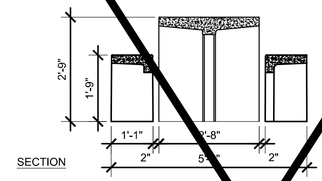

SECTION

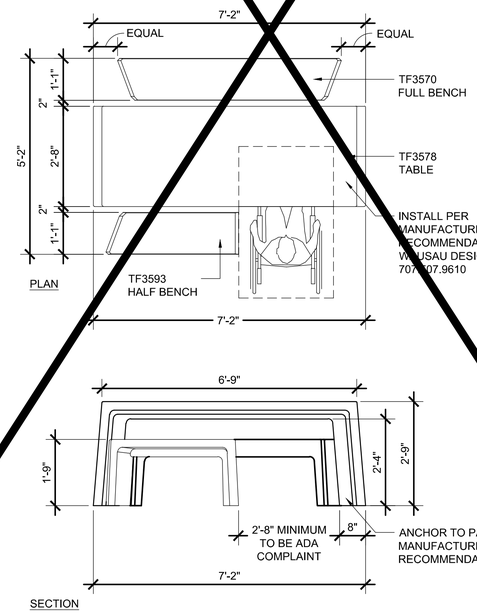

PLAN

SECTION

2 PICNIC TABLE

NTS

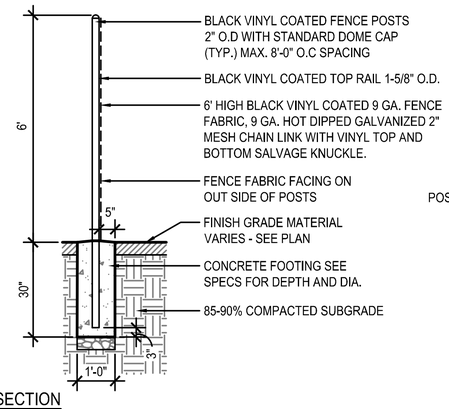

SECTION

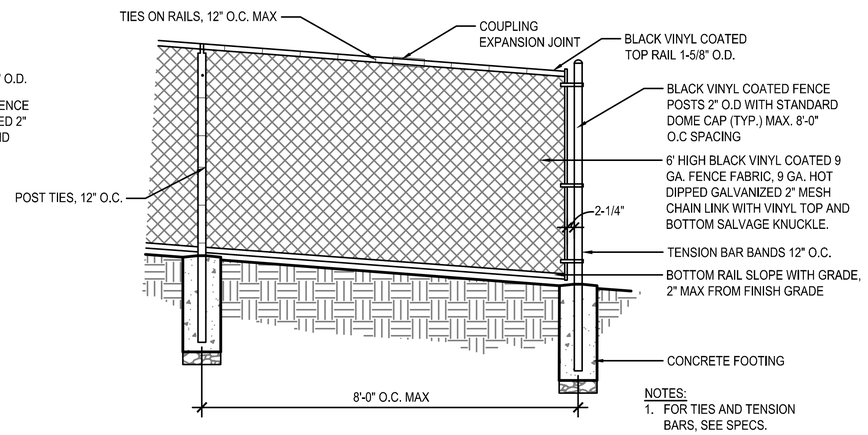

NOTES:
1. FOR TIES AND TENSION BARS, SEE SPECS.

1 CHAINLINK FENCE ON SLOPE

SCALE: 1/2" = 1'-0"

RECORD DRAWING
THIS RECORD DRAWING HAS BEEN PREPARED FROM THE ORIGINAL CONTRACT DOCUMENTS SIGNED AND SEALED BY THE RESPONSIBLE ENGINEER OF RECORD. ADDITIONAL INFORMATION HAS BEEN PROVIDED BY OTHERS TO REPRESENT AS-CONSTRUCTED CONDITION AND IS SHOWN ON THESE RECORD DRAWINGS. THE RESPONSIBLE ENGINEER OF RECORD CANNOT VERIFY THE ACCURACY OF THE AS-CONSTRUCTED CONDITION INFORMATION REPRESENTED ON THE RECORD DRAWINGS.

0" 1" VERIFY SCALES
BAR IS ONE INCH LONG ON FULL SIZE DRAWING. IF NOT ONE INCH LONG ON THIS DRAWING, ADJUST SCALES ACCORDINGLY

rhaa
SAN FRANCISCO MILL VALLEY
225 Miller Avenue, Mill Valley, CA 94941
P 415 383 3420

Woodard & Curran

REV	DATE	BY	APVD	DESCRIPTION
1	07/22	CT	TV	RECORD DRAWING

DESIGNED	MD
DRAWN	CA
CHECKED	BL

SUBMITTED: MARK TAKEMOTO
RMC PROJECT ENGINEER CE-64369

APPROVED: STEVE CLARY
RMC ENGINEER CE-30318

SAUSALITO · MARIN CITY SANITARY DISTRICT

TREATMENT AND WET WEATHER FLOW UPGRADE

CONSTRUCTION DETAILS

DWG NO	L20-5
SHEET NO	76 OF 226
PROJ NO	055-006
DATE	JULY 2022

FILENAME: L20-5 Fence Details 7-27-22 09:44am cto || XREFS:| X-SMCSD-TBLK | CABLE RAIL | TF3195 -- v | Chainlink Fence On Slope_24 |<<--

Last Saved By: cto 7-27-22 09:27am

REMOVED FROM CONTRACT

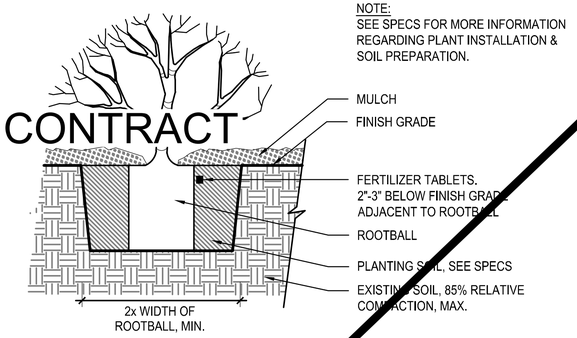

SECTION

1 SHRUB PLANTING

NOT TO SCALE

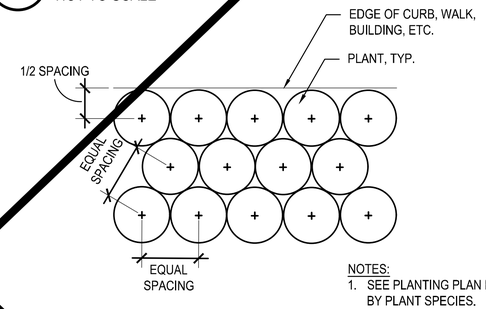

NOTES:
1. SEE PLANTING PLAN FOR SPACING BY PLANT SPECIES.
2. INSTALL TRIANGULATED PLANT LAYOUT, UNLESS OTHERWISE SHOWN ON PLANS.

PLAN

2 SHRUB PLANTING - LAYOUT

NOT TO SCALE

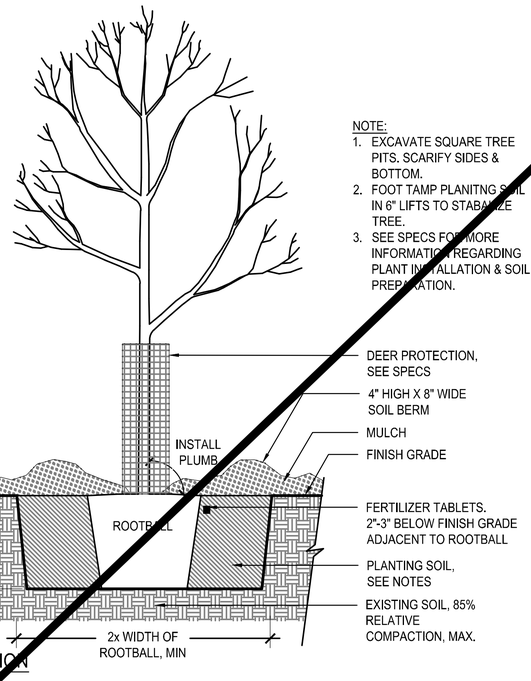

SECTION

4 TREE PLANTING

NTS

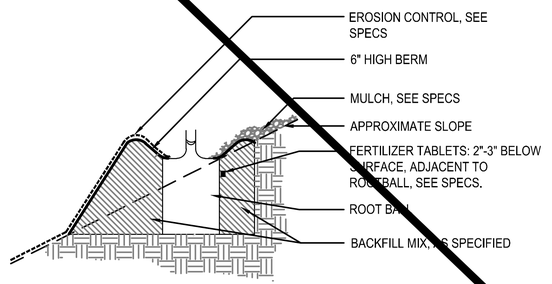

SECTION

3 PLANTING ON SLOPE

NOT TO SCALE

FILENAME: L20-6 Planting Details | 7-27-22 09:43am cto | XREFS: | X-SMCSD-TBLK | Plant Spacing_24 | Planting on Slope_16 | PLT_shrub | Tree Planting_16 |<<--

RECORD DRAWING
THIS RECORD DRAWING HAS BEEN PREPARED FROM THE ORIGINAL CONTRACT DOCUMENTS SIGNED AND SEALED BY THE RESPONSIBLE ENGINEER OF RECORD. ADDITIONAL INFORMATION HAS BEEN PROVIDED BY OTHERS TO REPRESENT AS-CONSTRUCTED CONDITION AND IS SHOWN ON THESE RECORD DRAWINGS. THE RESPONSIBLE ENGINEER OF RECORD CANNOT VERIFY THE ACCURACY OF THE AS-CONSTRUCTED CONDITION INFORMATION REPRESENTED ON THE RECORD DRAWINGS.

0" 1" VERIFY SCALES BAR IS ONE INCH LONG ON FULL SIZE DRAWING. IF NOT ONE INCH LONG ON THIS DRAWING, ADJUST SCALES ACCORDINGLY

rhaa
SAN FRANCISCO MILL VALLEY
225 Miller Avenue, Mill Valley, CA 94941
P 415.383.9423

Woodard & Curran

REV	DATE	BY	APVD	DESCRIPTION
1	07/22	CT	TV	RECORD DRAWING

DESIGNED	MD
DRAWN	CA
CHECKED	BL

SUBMITTED: MARK TAKEMOTO, RMC PROJECT ENGINEER CE-64369

APPROVED: STEVE CLARY, RMC ENGINEER CE-30318

SAUSALITO · MARIN CITY SANITARY DISTRICT

TREATMENT AND WET WEATHER FLOW UPGRADE

PLANTING DETAILS

DWG NO	L20-6
SHEET NO	77 OF 226
PROJ NO	055-006
DATE	JULY 2022

Last Saved By: cto 4-26-17 10:08am

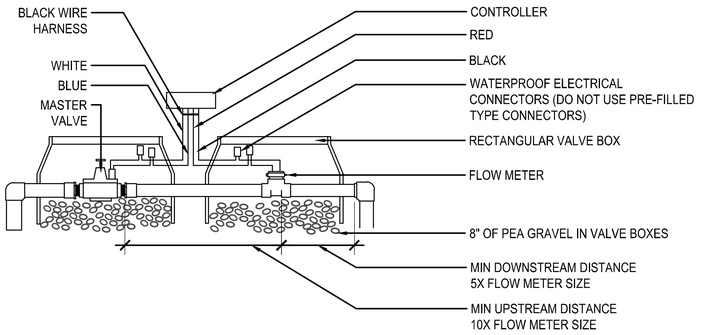

6 MASTER VALVE AND FLOW METER

NTS

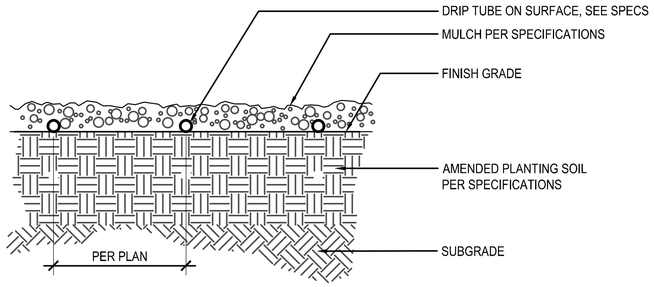

7 DRIPLINE INSTALLATION

NTS

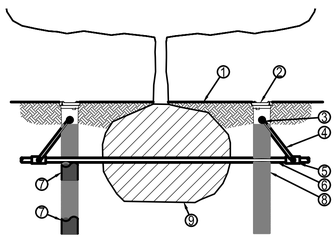

1. FINISH GRADE
2. ROOT WATERING SYSTEM: RAIN BIRD RWS-M
3. 1/2" (1,3 CM) SPIRAL BARB FITTING (INCLUDED)
4. 1/2" (1,3 CM) SWING ASSEMBLY: RAIN BIRD SA-125050
   OR
   1/2" (1,3 CM) SWING PIPE: RAIN BIRD SP SERIES WITH 1/2" (1,3 CM) MALE NPT x 0.490" BARB ELBOW: RAIN BIRD SBE-050
5. PVC SCH 40 TEE OR EL
6. PVC OR POLYETHYLENE LATERAL PIPE
7. OPTIONAL SOCK (RWS-SOCK) FOR SANDY SOILS
8. 4" (10,2 CM) WIDE X 18" (45,7 CM) LONG RIGID BASKET WEAVE CANISTER (INCLUDED)
9. PLANT ROOT BALL

NOTES:
1. POSITION EVENLY SPACED AROUND PLANT.
2. INSTALL PRODUCT WITH TOP EVEN WITH FINISH GRADE
3. RWS-M SERIES AVAILABLE IN THE FOLLOWING MODELS:
   RWS-M-B-C-1401: 0.25 GPM (0,95 L/M), CHECK VALVE
   RWS-M-B-1401: 0.25 GPM (0,95 L/M)
   RWS-M-B-C-1402: 0.5 GPM (1,9 L/M), CHECK VALVE
   RWS-M-B-1402: 0.5 GPM (1,9 L/M),
4. WHEN INSTALLING IN EXTREMELY HARD OR CLAY SOILS, ADD 3/4" (1,9 CM) GRAVEL UNDER AND AROUND THE UNIT TO ALLOW FASTER WATER INFILTRATION AND ROOT PENETRATION.
5. ONCE RWS-M HAS BEEN INSTALLED FILL THE BASKET WITH PEA GRAVEL BEFORE LOCKING LID.
6. OPTIONAL RWS-SOCK FOR USE IN SANDY SOILS.

8 TREE BUBBLER

NTS

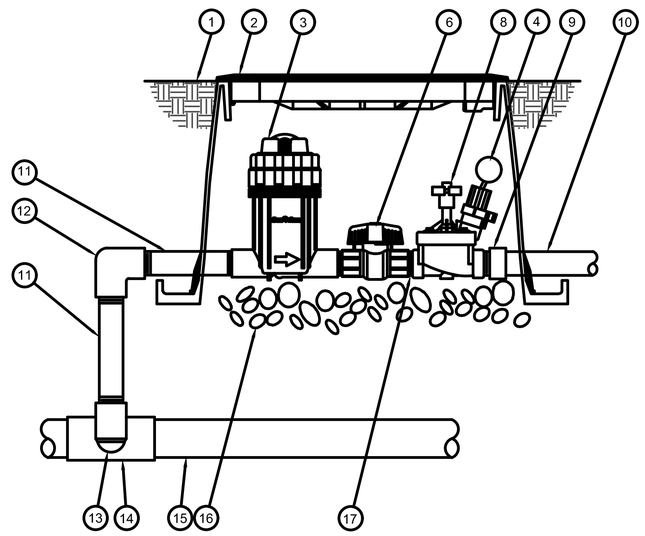

1. FINISH GRADE/TOP OF MULCH
2. VALVE BOX WITH COVER:
3. PRESSURE REGULATING QUICK CHECK BASKET FILTER:
   RAIN BIRD PRB-QKCHK-100
   (INCLUDED IN XCZ-PRB-100-COM KIT)
4. BATTERY POWERED SOLENOID
5. NOT USED
6. 1-INCH BALL VALVE (INCLUDED IN XCZ-PRB-100-COM KIT)
7. NOT USED
8. REMOTE CONTROL VALVE:
   RAIN BIRD PESB (INCLUCED IN XCZ-PRB-100-COM KIT)
9. PVC SCH 40 FEMALE ADAPTOR
10. LATERAL PIPE
11. PVC SCH 80 NIPPLE (LENGTH AS REQUIRED)
12. PVC SCH 40 ELL
13. PVC SCH 80 NIPPLE (2-INCH LENGTH, HIDDEN) AND PVC SCH 40 ELL
14. PVC SCH 40 TEE OR ELL
15. MAINLINE PIPE
16. 3-INCH MINIMUM DEPTH OF 3/4-INCH WASHED GRAVEL
17. PVC SCH 80 NIPPLE, CLOSE (INCLUDED IN XCZ-PRB-100-COM KIT)

4 REMOTE CONTROL VALVE DRIP EMITTER AND BATTERY

NTS

NOTES:
1. HEAT BRAND LID W/GV. TYPICAL ON ALL BOXES.
2. GATE VALVE AND FITTINGS SHALL BE LINE SIZE UNLESS NOTED OTHERWISE.
3. PLACE ¾" DIA. ROCK PRIOR TO INSTALLATION OF VALVE BOX.
4. USE TEFLON TAPE ON ALL THREADED FITTINGS.

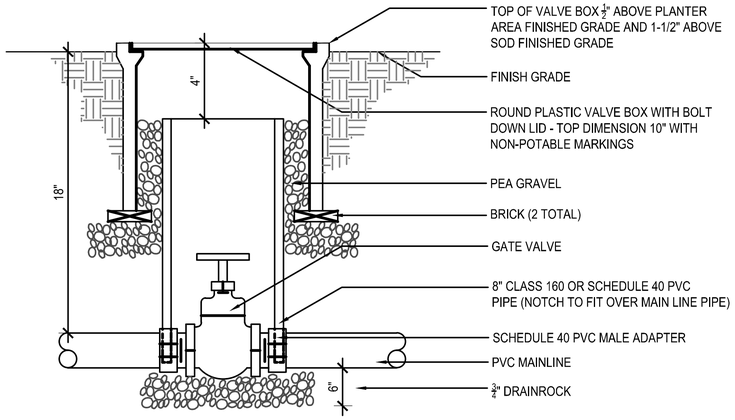

5 ISOLATION GATE VALVE

NTS

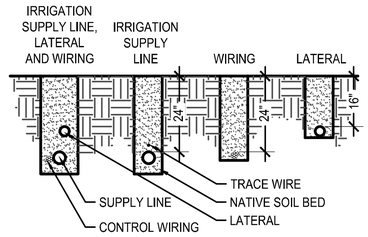

NOTES:
1. LAY IRRIGATION SUPPLY LINE ON NATIVE SOIL BED UNLESS SAND BED IS SPECIFIED
2. BUNDLE AND TAPE WIRE EVERY TEN FEET
3. PROVIDE 36" COVER OVER ALL PIPE AND PIPE SLEEVES UNDER ROADWAYS, PARKING LOTS, ENTRANCES TO PARKING LOTS AND FIRE ACCESS LANES PER NFPA 24, SECTION 10.44.
4. PROVIDE SEPARATE SLEEVES FOR ALL WIRES CROSSING UNDER ROADWAYS, PARKING LOTS AND FIRE ACCESS LANES PER NFPA 24, SECTION 10.44.

1 TRENCHING

1/2" = 1'-0"

NOTE:
IDENTIFY CONTROLLER AND STATION NUMBER.
IDENTIFY VALVE TYPE.
VALVE TYPE ABBREVIATIONS:
GV - GATE VALVE
RCV - REMOTE CONTROL VALVE
IV - ISOLATION VALVE
QCV - QUICK COUPLING VALVE
ALL LETTERS TO BE UNIFORM, 2" IN HEIGHT, AND PARALLEL/PERPENDICULAR TO LID EDGES.
IDENTIFY ALL VALVES WITH TAGS

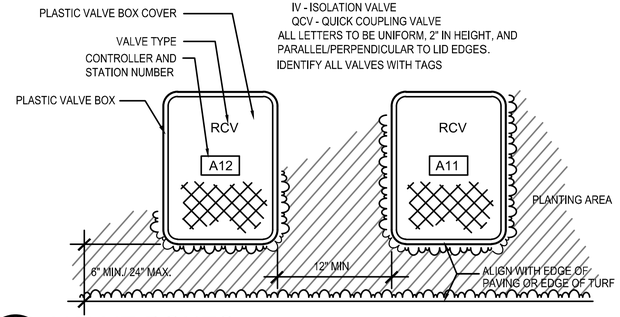

2 VALVE BOXES

NTS

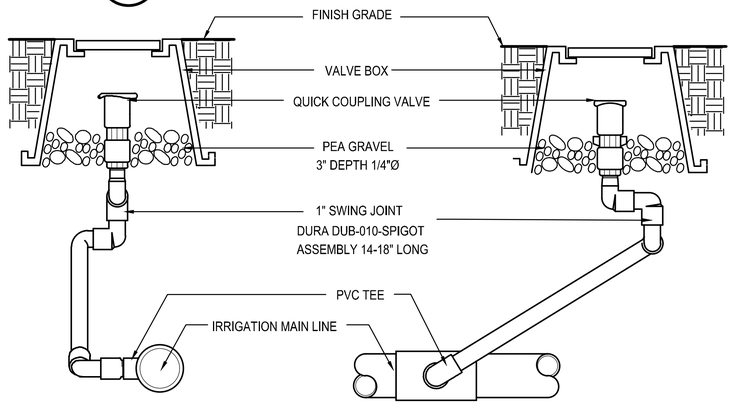

3 QUICK COUPLER VALVE

NTS

RECORD DRAWING
THIS RECORD DRAWING HAS BEEN PREPARED FROM THE ORIGINAL CONTRACT DOCUMENTS SIGNED AND SEALED BY THE RESPONSIBLE ENGINEER OF RECORD. ADDITIONAL INFORMATION HAS BEEN PROVIDED BY OTHERS TO REPRESENT AS-CONSTRUCTED CONDITION AND IS SHOWN ON THESE RECORD DRAWINGS. THE RESPONSIBLE ENGINEER OF RECORD CANNOT VERIFY THE ACCURACY OF THE AS-CONSTRUCTED CONDITION INFORMATION REPRESENTED ON THE RECORD DRAWINGS.

0" 1" VERIFY SCALES BAR IS ONE INCH LONG ON FULL SIZE DRAWING. IF NOT ONE INCH LONG ON THIS DRAWING, ADJUST SCALES ACCORDINGLY

rhaa SAN FRANCISCO MILL VALLEY 225 Miller Avenue, Mill Valley, CA 94941 T 415.383.5220

Woodard & Curran

REV	DATE	BY	APVD	DESCRIPTION
1	07/22	CT	TV	RECORD DRAWING

DESIGNED MD
DRAWN CA
CHECKED BL

SUBMITTED: MARK TAKEMOTO
RMC PROJECT ENGINEER CE-64369
APPROVED: STEVE CLARY
RMC ENGINEER CE-30318

SAUSALITO · MARIN CITY SANITARY DISTRICT

TREATMENT AND WET WEATHER FLOW UPGRADE

IRRIGATION DETAILS

DWG NO	L30-1
SHEET NO	78 OF 226
PROJ NO	055-006
DATE	JULY 2022

FILENAME: L30-1 Irrigation Details | 7-27-22 09:46am cto || XREFS:| Drip Remote Control Valve_rainbird | Flow Meter | IRR_wall controller | Irrbub24 | Irtrnch4 | Isolation Valve | DRIP TUBING INSTALLATION | QuickCouplingValve1-2 | RemoteControlValve1-2 | Root Watering System | Valve Boxes | VALV GRP | X-SMCSD-TBLK |

Last Saved By: chelsea.andersson 4-26-17 10:13am

STRUCTURAL NOTES

GENERAL

1. ALL STRUCTURAL DRAWINGS SHALL BE USED IN CONJUNCTION WITH THE CIVIL, ARCHITECTURAL, MECHANICAL, ELECTRICAL, AND SHOP DRAWINGS AND THE PROJECT SPECIFICATIONS (IF ANY).
2. CONSTRUCTION SHALL MEET THE REQUIREMENTS OF THE 2013 CALIFORNIA BUILDING CODE (CBC). THE CBC SHALL GOVERN EXCEPT WHERE OTHER APPLICABLE CODES OR THESE DOCUMENTS ARE MORE RESTRICTIVE.
3. NOTHING SHOWN OR OMITTED FROM THESE DOCUMENTS SHALL RELIEVE THE CONTRACTOR FROM FULL COMPLIANCE WITH ALL APPLICABLE CODES AND ORDINANCES.
4. THE CONTRACTOR ALONE IS RESPONSIBLE FOR JOB SITE SAFETY. SITE REVIEW OF THE CONSTRUCTION BY THE ENGINEER IS TO DETERMINE CONFORMANCE WITH THE PLANS AND SPECIFICATIONS. IT DOES NOT ENCOMPASS SAFETY PROCEDURES OR OPERATIONS.
5. WITHOUT EXCLUSION OF ANY REFERENCE IN THE CONSTRUCTION DOCUMENTS TO ANY RULE OR REGULATION, THE ENGINEER IS NOT ASSUMING ANY PROVISIONS OF SUPERVISION OF CONSTRUCTION METHODS OR PROCESSES.
6. STRUCTURES HAVE BEEN DESIGNED FOR OPERATIONAL LOADS ON THE COMPLETED STRUCTURES. DURING CONSTRUCTION, BRACING OR SHORING SHALL SUPPORT STRUCTURES WHEREVER EXCESSIVE CONSTRUCTION LOADS MAY OCCUR.
7. SEE ALL OTHER PROJECT DOCUMENTS FOR REGLETS, PIPE SLEEVES, CONDUITS AND OTHER ITEMS TO BE EMBEDDED OR PASSED THROUGH THE CONCRETE.
8. PENETRATIONS THROUGH WALLS OR SLABS LESS THAN 12 INCHES IN DIAMETER MAY NOT BE SHOWN ON THE STRUCTURAL DRAWINGS. REFER TO ASSOCIATED DRAWINGS FOR LOCATIONS.
9. WRITTEN DIMENSIONS SHALL BE USED FOR CONSTRUCTION. DO NOT SCALE DRAWINGS.
10. STRUCTURAL DIMENSIONS CONTROLLED BY OR RELATED TO MECHANICAL AND/OR ELECTRICAL EQUIPMENT SHALL BE VERIFIED BY THE CONTRACTOR PRIOR TO CONSTRUCTION.
11. MECHANICAL AND ELECTRICAL EQUIPMENT SUPPORTS, ANCHORAGES, OPENINGS, RECESSES AND EMBEDMENTS NOT SHOWN ON THE DRAWINGS SHALL BE PROVIDED BY THE CONTRACTOR PRIOR TO PLACING CONCRETE.
12. DIMENSIONS INDICATED WITH AN * SHALL BE COORDINATED WITH MECHANICAL AND/OR ELECTRICAL DRAWINGS AND EQUIPMENT SUPPLIED.
13. ALL DIMENSIONS SHALL BE FIELD VERIFIED BY THE CONTRACTOR. SHOULD CONFLICTS OR INTERFERENCE OCCUR, THEY SHALL BE RESOLVED WITH THE ENGINEER. EXISTING FIELD CONDITIONS AT VARIANCE WITH THE PLANS SHALL BE BROUGHT TO THE ATTENTION OF THE ENGINEER BEFORE ANY WORK IS PERFORMED.
14. USE PERTINENT STANDARD DETAILS SHOWN, EVEN THOUGH THEY MAY NOT BE CALLED OUT AT LOCATIONS WHERE THEY APPLY.
15. CONDITIONS NOT SPECIFICALLY SHOWN OR INDICATED SHALL BE CONSTRUCTED SIMILAR TO DETAILS SHOWN FOR THE RESPECTIVE MATERIALS OR CONDITIONS.

DEFERRED SUBMITTALS

1. THE FOLLOWING PORTIONS OF THE PROJECT ARE DEFERRED SUBMITTAL ITEMS. DEFERRED SUBMITTALS LISTED BELOW ARE THE RESPONSIBILITY OF THE CONTRACTOR. DEFERRED SUBMITTAL ITEMS HAVE NOT BEEN DESIGNED BY THE ENGINEER OF RECORD. REFER TO CONTRACT DOCUMENTS FOR ADDITIONAL INFORMATION.
   a) FABRICATED ENGINEERED STRUCTURE - CLARIFIER COVER
   b) METAL STAIRS AND LANDINGS
   c) METAL PLANK GRATING AND PLATFORM SYSTEMS
   d) FRP COMPOSITE TRENCH COVERS
   e) HANDRAILS
   f) GUARDRAILS
   g) CALTRANS ST-40 BRIDGE RAIL
   h) HATCHES
   i) EQUIPMENT ANCHORAGE
   j) PIPE SUPPORTS
   k) CONDUIT SUPPORTS, INCLUDING CABLE TRAY SYSTEMS
2. UNLESS OTHERWISE NOTED, DEFERRED SUBMITTAL ITEMS SHALL BE STAMPED AND SIGNED BY A PROFESSIONAL CIVIL OR STRUCTURAL ENGINEER REGISTERED IN THE STATE OF CALIFORNIA.
3. DEFERRED SUBMITTAL ITEMS SHALL BE SUBMITTED TO THE OWNER FOR APPROVAL DURING THE CONSTRUCTION PHASE OF THE PROJECT.
4. DEFERRED SUBMITTAL ITEMS SHALL NOT BE INSTALLED UNTIL THE ENGINEER OF RECORD HAS REVIEWED THE SUBMITTAL DOCUMENTS AND INDICATED THAT THEY HAVE BEEN REVIEWED AND THAT THEY HAVE BEEN FOUND TO BE IN GENERAL CONFORMANCE WITH THE CONTRACT DOCUMENTS.
5. DEFERRED SUBMITTAL ITEMS SHALL NOT BE INSTALLED UNTIL THEIR DESIGN AND SUBMITTAL DOCUMENTS HAVE BEEN FAVORABLY REVIEWED BY THE OWNER.

DESIGN LOADS

1. LIVE LOADS:

USE OR OCCUPANCY	UNIFORM LOAD (psf)	CONCENTRATED LOAD (lbs)
WALKWAYS, STAIRWAYS	100	300 (1)
EQUIPMENT ROOM FLOORS	250	- (2)
ROOFS (NON-CONCRETE)	20 (3)	-
ROOFS (CONCRETE)	50	-
UNRESTRICTED VEHICULAR AREAS	640	- (4)
PROCESS AREA	200	-

(1) MINIMUM CONCENTRATED LOAD ON STAIR TRENDS ONLY.
(2) REFER TO EQUIPMENT MANUFACTURER'S DRAWINGS FOR CONCENTRATED LOAD.
(3) MAY BE REDUCED AS ALLOWED BY THE CBC.
(4) DESIGN LOAD CONFORMS TO THE REQUIREMENTS FOR AASHTO HL93 LANE LOADING WHERE APPLICABLE.

2. WIND:

BASIC WIND SPEED (3-SECOND GUST):	115
RISK CATEGORY:	III
WIND EXPOSURE CATEGORY:	D
INTERNAL PRESSURE COEFFICIENT	N/A
C&C PRESSURES FOR DEFERRED SUBMITTALS	N/A

3. SEISMIC:

SEISMIC IMPORTANCE FACTOR (I_E)	1.25
RISK CATEGORY:	III
MAPPED SPECTRAL RESPONSE ACCELERATIONS:	S_S = 1.500g, S_1 = 0.639g
SITE CLASS	B
SPECTRAL RESPONSE COEFFICIENTS:	S_{DS} = 1.000, S_{D1} = 0.426g
SEISMIC DESIGN CATEGORY:	D
BASIC SEISMIC-FORCE-RESISTING SYSTEM:	ORDINARY REINFORCED CONCRETE SHEAR WALLS
RESPONSE MODIFICATION FACTOR:	R_I = 2.0 & R_C = 1.0
ANALYSIS PROCEDURE USED:	CHAPTER 12 - EQUIVALENT LATERAL FORCE PROCEDURE CHAPTER 15 - WATER STORAGE AND WATER TREATMENT TANKS (ACI 350)

SNOW:

GROUND SNOW LOAD (P_g):	20 PSF
FLAT-ROOF SNOW LOAD (P_f):	30 PSF
SNOW EXPOSURE FACTOR (C_e):	N/A
SNOW LOAD IMPORTANCE FACTOR (I_s):	N/A
THERMAL FACTOR (C_t):	N/A

SITE WORK

1. A SOIL REPORT HAS BEEN PREPARED FOR THE PROJECT BY MILLER PACIFIC ENGINEERING GROUP. A COPY OF THE REPORT IS ON FILE AT THE OFFICE OF THE ENGINEER AND MAY BE REVIEWED WITH PROPER ADVANCED NOTIFICATION.
2. EXCAVATION FOR PADS AS SHOWN ON THE DRAWINGS: THE BOTTOMS OF ALL EXCAVATIONS SHALL BE LEVEL, TAMPED FIRM, CLEAN AND FREE FROM ALL DEBRIS OR FOREIGN MATTER.
3. OVER-EXCAVATION SHALL EXTEND LATERALLY BEYOND THE OUTSIDE EDGE OF FOOTINGS BY A MINIMUM OF 1/2 THE DEPTH OF OVER-EXCAVATION BELOW THE FOOTING OR 12-INCHES.
4. WHERE PRACTICABLE, SIDES OF FOOTINGS SHALL BE CUT NEAT AND CONCRETE POURED DIRECTLY AGAINST THE EXCAVATION. IF FORMING IS REQUIRED, THE TRENCHES SHALL BE EXCAVATED WIDE ENOUGH TO PERMIT THE ERECTION AND REMOVAL OF FORMS.
5. THE BOTTOM OF ALL EXCAVATIONS SHALL BE SCARIFIED TO A DEPTH OF 8 INCHES, MOISTURE CONDITIONED TO WITHIN 5 PERCENT (±1 PERCENT) OVER THE OPTIMUM MOISTURE CONTENT, AND COMPACTED TO A LEAST 89 PERCENT (±1 PERCENT) RELATIVE COMPACTION.
6. CLASS 2 AGGREGATE BASEROCK SHALL CONSIST OF MATERIAL FREE FROM DEBRIS AND ORGANIC OR OTHER DELETERIOUS MATERIALS. BACKFILL MATERIAL SHALL BE PLACED IN 8-INCH LAYERS, LEVELED, RAMMED AND TAMPED IN PLACE. COMPACTION OF ALL LAYERS SHALL BE A MINIMUM OF 95 PERCENT MAXIMUM DRY DENSITY IN ACCORDANCE WITH ASTM D1557.

SOIL PARAMETERS

1. FOUNDATION DESIGN CRITERIA:

	FOUNDATION TYPE	
	SHALLOW FOOTING	DRILLED PIERS
MINIMUM WIDTH / DIAMETER	12 IN.	Ø 18 IN.
MINIMUM EMBEDMENT	12 IN. (1)	5 FT.
ALLOWABLE BEARING PRESSURE		
DEAD+LIVE	5000 psf (2)(3)	-
BASE FRICTION COEFFICIENT	0.4	-
SKIN FRICTION (4)		
FILL		IGNORE
BEDROCK		4,000 psf
LATERAL PASSIVE RESISTANCE (5)		
FILL	-	IGNORE
BEDROCK	-	450 pcf (6)

(1) MAINTAIN MINIMUM 7-FEET HORIZONTAL CONFINEMENT FROM THE FACE OF ADJACENT SLOPES.
(2) MAY BE INCREASED BY 1/3 FOR TOTAL DESIGN LOADS (INCLUDING WIND AND SEISMIC).
(3) ALL FOUNDATION TO BEAR DIRECTLY ON FIRM BEDROCK.
(4) UPLIFT RESISTANCE IS EQUAL TO 80% OF TOTAL SKIN FRICTION.
(5) EQUIVALENT FLUID PRESSURE, NOT TO EXCEED 10 TIMES VALUE IN psf.
(6) APPLY VALUES OVER EFFECTIVE WIDTH OF 2 PIER DIAMETERS.

2. RETAINING WALL DESIGN CRITERIA:

LATERAL EARTH PRESSURE	UNRESTRAINED (1)(2)	RESTRAINED (1)(3)	
LEVEL	45 pcf	25 x H psf	
2:1 SLOPE	65 pcf	40 x H psf	
SEISMIC SURCHARGE (3)	15 x H PSF		
SOIL NAILS / TIEBACKS (7)	PHI (4)	C (5)	GAMMA (6)
FILL / COLLUVIUM / RESIDUAL SOIL	32	350 psf	130 pcf
CHERT / GREENSTONE BEDROCK	40	2,000 psf	140 pcf
MINIMUM DIAMETER HOLES	6 IN.		
SKIN FRICTION:			
FILL / COLLUVIUM / RESIDUAL SOIL	1,000 psf		
BEDROCK	3,000 psf		

(1) INTERPOLATE EARTH PRESSURE FOR INTERMEDIATE SLOPES.
(2) EQUIVALENT FLUID PRESSURE.
(3) RECTANGULAR UNIFORM PRESSURE DISTRIBUTION (H = HEIGHT OF WALL)
(4) ANGLE OF INTERNAL FRICTION (DEGREES), EFFECTIVE STRESS, (UNITLESS).
(5) APPARENT (EFFECTIVE) COHESION, FOR SEISMIC CONDITIONS 500 psf OF ADDITIONAL COHESION MAY BE INCLUDED.
(6) UNIT WEIGHT OF SOIL.
(7) SOIL NAILS AND TIEBACKS SHALL BE DESIGNED FOR LOAD TESTING UP TO 150% OF THE DESIGN LOAD.

CONCRETE

1. REINFORCED CONCRETE SHALL CONFORM TO ACI 318.
2. PORTLAND CEMENT SHALL CONFORM TO ASTM C150 TYPE II. ONE BRAND OF CEMENT SHALL BE USED THROUGHOUT THE WORK.
3. ALL AGGREGATES SHALL CONFORM TO ASTM C33. THE MAXIMUM SIZE AGGREGATE SHALL BE 1 INCH.
4. CONCRETE COMPRESSIVE STRENGTH SHALL MEET THE MINIMUM REQUIREMENTS LISTED BELOW.

LOCATION	MIN 28 DAY STRENGTH (psi)
STRUCTURAL CONCRETE	4,500
CONCRETE SIDEWALKS AND PAVEMENTS	3,000
CONCRETE FILL	2,500

5. ALL CONCRETE SHALL HAVE AIR ENTRAINMENT OF 4.0 ± 1.0 PERCENT.
6. CONSTRUCTION JOINTS SHALL NOT BE PLACED AT LOCATIONS OTHER THAN THOSE SHOWN ON THE DRAWINGS WITHOUT THE PRIOR APPROVAL OF THE ENGINEER OF RECORD.
7. ALL EXPOSED CORNERS OF CONCRETE SHALL HAVE 3/4" MINIMUM CHAMFER, UNLESS NOTED OTHERWISE.

CONCRETE REINFORCING

1. REINFORCING STEEL SHALL CONFORM TO THE LATEST EDITION OF ASTM SPECIFICATION A706 OR A615, GRADE 60.
2. REINFORCING STEEL FABRICATION SHALL BE IN ACCORDANCE WITH THE LATEST EDITION OF CRSI MANUAL OF STANDARD PRACTICE.
3. REINFORCING SHALL HAVE THE FOLLOWING CLEAR CONCRETE COVER, UNLESS OTHERWISE NOTED ON THE DRAWINGS.

CONDITION	COVER (INCHES)
UNFORMED SURFACES IN CONTACT WITH EARTH	3
FORMED SURFACES EXPOSED TO EARTH, WATER AND/OR WEATHER	2
BOTTOM SURFACES FOR SLAB OVER WATER	2
CONCRETE SURFACES FOR DRY CONDITIONS	
WALLS, SLABS AND JOISTS	1 1/2
BEAMS AND COLUMNS:	
PRIMARY REINFORCING	2
STIRRUPS, SPIRALS AND TIES	1 1/2

4. SPLICED BARS SHALL HAVE A MINIMUM CLASS B CONTACT LAP AS SPECIFIED IN THE LATEST EDITION OF ACI 315 DETAILING MANUAL AND ACI 318 UNLESS OTHERWISE NOTED ON THE DRAWINGS. WHERE SHOWN ON THE DRAWINGS, ld = DEVELOPMENT LENGTH AS DEFINED IN THE STANDARD DETAILS OF THESE DRAWINGS. HOOKS OF REINFORCING STEEL SHALL COMPLY WITH ACI 318.
5. WRITTEN SPACING AND LOCATION OF REINFORCING SHALL TAKE PRECEDENCE OVER DEPICTED SPACING AND LOCATION.
6. UNLESS OTHERWISE NOTED ON THE DRAWINGS, REINFORCING BARS SHOWN TERMINATING WITH A HOOK SHALL BE FABRICATED WITH A STANDARD HOOK AS DEFINED WITHIN ACI 318. WHERE SECTION THICKNESS DOES NOT ALLOW FOR FULL HOOK EXTENSION, TILT HOOK UNTIL HOOK FITS. ALTERNATIVELY CONTRACTOR MAY USE 180° HOOK OR TWO SMALLER HOOKED BARS OF EQUIVALENT AREA OF STEEL.
7. IN CASES WHERE REINFORCING BARS CANNOT BE EXTENDED AS FAR AS REQUIRED DUE TO THE LIMITED EXTENT OF THE ADJACENT CONCRETE STRUCTURE, THE BARS SHALL EXTEND AS FAR AS POSSIBLE AND BE TERMINATED WITH A STANDARD HOOK.
8. AT FOOTING CORNERS AND INTERSECTIONS, EXTEND BARS AROUND CORNERS AND LAP A MINIMUM OF 40 BAR DIAMETERS.

CONCRETE JOINTS

1. REINFORCING STEEL SHOWN IS FOR CLARITY ONLY. SEE PLANS AND SECTIONS FOR REINFORCING SIZES, SPACING, LOCATIONS AND DETAILS.
2. ALL SURFACES SHALL BE PREPARED IN ACCORDANCE WITH SPECIFICATION SECTION 03150.
3. EXCEPT WHERE OTHERWISE NOTED ON THE DETAILS JUNCTION BARS (JB) SHALL BE THE SAME SIZE AS THE LARGER OF WALL OR SLAB REINFORCING.
4. ALL LAP SPLICES SHALL BE CLASS B TENSION CONTACT LAP.
5. UNLESS OTHERWISE NOTED, SEALANT SHALL BE PROVIDED IN JOINTS WHERE SHOWN ON THE DRAWINGS AND WHERE INDICATED BY THE FOLLOWING:
   a) CONTROL JOINTS FOR WALLS AND SLABS IN LIQUID CONTAINMENT STRUCTURES SHALL HAVE SEALANT APPLIED TO THE LIQUID SIDE(S) OF THE JOINT.
   b) EXPANSION JOINTS SHALL HAVE SEALANT APPLIED TO BOTH SIDES OF THE JOINT, EXCEPT FOR THE SOIL SIDE OF A JOINT FOR A BASE SLAB.
   c) CONSTRUCTION JOINTS WILL NOT REQUIRE SEALANT, UNLESS OTHERWISE NOTED ON THE DRAWINGS.
6. UNLESS OTHERWISE NOTED, WATERSTOPS SHALL BE PROVIDED IN JOINTS WHERE SHOWN ON THE DRAWINGS AND WHERE INDICATED BY THE FOLLOWING:
   a) IN ALL JOINTS IN WALLS AND SLABS OF LIQUID CONTAINMENT STRUCTURES TO PREVENT EXFILTRATION OF LIQUID INTO SOIL OR DRY AREAS OF THE STRUCTURE.
   b) IN ALL BELOW-GRADE JOINTS IN WALLS AND SLABS TO PREVENT INFILTRATION OF GROUNDWATER INTO STRUCTURE.
7. WATERSTOP SHALL BE PLACED AT CENTER OF WALL OR SLAB, UNLESS OTHERWISE NOTED.

RECORD DRAWING
THIS RECORD DRAWING HAS BEEN PREPARED FROM THE ORIGINAL CONTRACT DOCUMENTS SIGNED AND SEALED BY THE RESPONSIBLE ENGINEER OF RECORD. ADDITIONAL INFORMATION HAS BEEN PROVIDED BY OTHERS TO REPRESENT AS-CONSTRUCTED CONDITION AND IS SHOWN ON THESE RECORD DRAWINGS. THE RESPONSIBLE ENGINEER OF RECORD CANNOT VERIFY THE ACCURACY OF THE AS-CONSTRUCTED CONDITION INFORMATION REPRESENTED ON THE RECORD DRAWINGS.

0" 1" VERIFY SCALES BAR IS ONE INCH LONG ON FULL SIZE DRAWING. IF NOT ONE INCH LONG ON THIS DRAWING, ADJUST SCALES ACCORDINGLY

TJC and ASSOCIATES, INC.

Woodard & Curran

REV	DATE	BY	APVD	DESCRIPTION

DESIGNED	RKT
DRAWN	ADM
CHECKED	TJC

SUBMITTED: MARK TAKEMOTO, RMC PROJECT ENGINEER CE-64369
APPROVED: STEVE CLARY, RMC ENGINEER CE-30318

SAUSALITO · MARIN CITY SANITARY DISTRICT

TREATMENT AND WET WEATHER FLOW UPGRADE

GENERAL NOTES

DWG NO	S-1
SHEET NO	OF 226
PROJ NO	055-006
DATE	JULY 2022

FILENAME: GS Sheets 9-19-22 11:50am BeeVue || XREFS: X-SMCSD-TBLK |<<--

Last Saved By: BeeVue 9-19-22 11:48am

CONDUITS AND PIPES EMBEDDED IN CONCRETE

1. CONDUIT, PIPES, AND SLEEVES OF ANY MATERIAL NOT HARMFUL TO CONCRETE AND WITHIN LIMITATIONS OF THE PROJECT DRAWINGS AND SPECIFICATIONS, AND ACI 318 MAY BE PERMITTED TO BE EMBEDDED IN CONCRETE SUBJECT TO PRIOR APPROVAL BY THE ENGINEER OF RECORD, PROVIDED THEY ARE NOT CONSIDERED, BY THE ENGINEER OF RECORD, TO DISPLACE STRUCTURAL CONCRETE, EXCEPT AS PROVIDED HEREIN.
2. CONDUITS AND PIPES OF ALUMINUM SHALL NOT BE EMBEDDED IN STRUCTURAL CONCRETE.
3. CONDUITS AND PIPES, WITH THEIR FITTINGS, EMBEDDED WITHIN A COLUMN SHALL NOT DISPLACE MORE THAN 4-PERCENT OF THE AREA OF THE CROSS SECTION ON WHICH THE STRENGTH IS CALCULATED OR WHICH IS REQUIRED FOR FIRE PROTECTION. THE ENGINEER OF RECORD SHALL DETERMINE IF THE STRENGTH OF THE CONSTRUCTION HAS BEEN SIGNIFICANTLY IMPAIRED.
4. CONDUITS AND PIPES EMBEDDED WITHIN A SLAB, WALL, OR BEAM SHALL SATISFY THE FOLLOWING:
   a) THEY SHALL NOT BE LARGER IN OUTSIDE DIAMETER THAN 1/3 THE OVERALL THICKNESS OF SLAB, WALL, OR BEAM IN WHICH THEY ARE EMBEDDED.
   b) MINIMUM CENTER-TO-CENTER SPACING BETWEEN CONDUIT AND/OR PIPING RUNS SHALL BE 3 TIMES OUTSIDE DIAMETER OR WIDTH.
   c) THEY SHALL BE LOCATED IN SUCH A MANNER AS TO MAINTAIN A MINIMUM OF 1-INCH CLEAR SPACE BETWEEN THE EMBEDDED ITEM AND CONCRETE REINFORCEMENT.
   d) THEY SHALL NOT SIGNIFICANTLY IMPAIR THE STRENGTH OF THE CONSTRUCTION. THE ENGINEER OF RECORD SHALL DETERMINE IF THE STRENGTH OF THE CONSTRUCTION HAS BEEN SIGNIFICANTLY IMPAIRED.
5. NO LIQUIDS, GAS, OR VAPOR, EXCEPT WATER NOT EXCEEDING 90 DEGREES FAHRENHEIT NOR 50 PSI, SHALL BE PLACED IN THE PIPES UNTIL THE CONCRETE HAS ATTAINED ITS DESIGN STRENGTH.
6. IN SOLID SLABS, CONDUITS AND/OR PIPING SHALL BE PLACED BETWEEN THE TOP AND BOTTOM REINFORCEMENT AT THE CENTERLINE OF THE SLAB. AT A MINIMUM, THEY SHALL BE LOCATED IN SUCH A MANNER AS TO MAINTAIN A MINIMUM OF 1-INCH CLEAR SPACE BETWEEN THE EMBEDDED ITEM AND PRIMARY REINFORCEMENT.
7. CONCRETE COVER FOR PIPES, CONDUITS, AND FITTINGS SHALL NOT BE LESS THAN 2-INCHES FOR CONCRETE EXPOSED TO EARTH, CONTAINED LIQUIDS, OR WEATHER, NOR LESS THAN 1-INCH FOR CONCRETE NOT EXPOSED TO CONTAINED LIQUIDS, WEATHER OR IN CONTACT WITH GROUND.
8. REINFORCEMENT WITH AN AREA NOT LESS THAN 0.002 TIMES THE AREA OF CONCRETE SECTION SHALL BE PROVIDED NORMAL TO THE CONDUIT AND/OR PIPING.
9. CONDUITS AND/OR PIPING SHALL BE SO FABRICATED AND INSTALLED THAT CUTTING, BENDING, OR DISPLACEMENT OF REINFORCEMENT FROM ITS PROPER LOCATION WILL NOT BE REQUIRED.
10. PIPES PASSING THROUGH WALLS OF A LIQUID - CONTAINING STRUCTURE SHALL INCLUDE AN INTEGRAL WATERSTOP.

CONCRETE ANCHORS

1. CAST-IN ANCHOR RODS SHALL CONFORM TO ASTM F1554, GRADE 36.
2. POST-INSTALLED CONCRETE ANCHORS, INCLUDING ADHESIVE AND EXPANSION ANCHORS, SHALL CONFORM TO MANUFACTURER'S RECOMMENDATIONS AND THE APPROPRIATE ICC-ES AND/OR IAPMO-UES EVALUATION SERVICES REPORT (ER). ANCHORS WITHOUT AN ICC-ES AND/OR IAPMO-UES ER SHALL NOT BE USED.
3. UNLESS OTHERWISE INDICATED, ALL ADHESIVE AND EXPANSION ANCHORS FOR INSTALLATION IN CONCRETE SHALL HAVE SATISFIED THE REQUIREMENTS OF THE SIMULATED SEISMIC TESTS OF ACI 355.4 OR ACI 355.2, NO SUBSTITUTION SHALL BE ALLOWED.
4. CONTRACTOR SHALL LOCATE EXISTING REBAR USING NON-DESTRUCTIVE METHODS PRIOR TO DRILLING HOLES FOR POST-INSTALLED ANCHORS. ADJUST SPACING OF ANCHORS TO MISS EXISTING REINFORCING. TOTAL NUMBER OF ANCHORS PROVIDED SHALL BE EQUAL TO THAT SHOWN ON THE DRAWINGS.
5. ADHESIVE ANCHORS SHALL CONSIST OF A TWO-COMPONENT RESIN ADHESIVE. THE PACKAGES CONTAINING EACH COMPONENT SHALL BE ATTACHED TO A DISPENSING MANIFOLD. AN AUGER STYLE NOZZLE SHALL BE ATTACHED FOR PROPER MIXING OF THE ADHESIVE COMPONENTS. WHERE THREADED RODS ARE REQUIRED, RODS SHALL CONFORM TO ASTM A193 GRADE B7. WHERE STAINLESS STEEL IS CALLED FOR ON THE DRAWINGS, CONTRACTOR SHALL USE ALLOY GROUP 1 TYPE 304 CONDITION CW.

SPECIAL INSPECTION

1. SPECIAL INSPECTION SHALL BE CONDUCTED IN ACCORDANCE WITH THE REQUIREMENTS SET FORTH IN CHAPTER 17 OF THE CBC. UNLESS OTHERWISE NOTED IN THE PROJECT SPECIFICATIONS, SPECIAL INSPECTION SHALL BE PROVIDED BY AND PAID FOR BY THE DISTRICT. THE FOLLOWING ITEMS, AS A MINIMUM, SHALL RECEIVE SPECIAL INSPECTION:

ITEM	STRUCTURAL STEEL INSPECTIONS AND VERIFICATION	FREQUENCY	
		CONTINUOUS	PERIODIC
1.	MATERIAL VERIFICATION OF STRUCTURAL STEEL:	---	---
	A. IDENTIFICATION MARKINGS TO CONFORM TO ASTM STANDARDS SPECIFIED IN THE APPROVED CONSTRUCTION DOCUMENTS.		X
	B. MANUFACTURERS' CERTIFIED MILL TEST REPORTS.		X
2.	MATERIAL VERIFICATION OF WELD FILLER MATERIALS:	---	---
	A. IDENTIFICATION MARKINGS TO CONFORM TO AWS SPECIFICATION IN THE APPROVED CONSTRUCTION DOCUMENTS.		X
	B. MANUFACTURER'S CERTIFICATE OF COMPLIANCE REQUIRED.		X
3.	INSPECTION OF WELDING:	---	---
	A. STRUCTURAL STEEL:	---	---
	1) COMPLETE AND PARTIAL PENETRATION GROOVE WELDS.	X	
	2) MULTI-PASS FILLET WELDS.	X	
	3) SINGLE-PASS FILLET WELDS > 5/16"	X	
	4) SINGLE-PASS FILLET WELDS ≤ 5/16"		X
	5) FLOOR AND ROOF DECK WELDS.		X
	B. REINFORCING STEEL:		
	1) VERIFICATION OF WELDABILITY OF REINFORCING STEEL OTHER THAN ASTM A 706.		X
	2) BOUNDARY ELEMENTS OF SPECIAL REINFORCED CONCRETE SHEAR WALLS AND SHEAR REINFORCEMENT.	X	
	3) SHEAR REINFORCEMENT.	X	
	4) OTHER REINFORCING STEEL.		X

ITEM	CONCRETE INSPECTIONS AND VERIFICATION	FREQUENCY	
		CONTINUOUS	PERIODIC
1.	INSPECTION OF REINFORCING STEEL AND PLACEMENT.		X
2.	INSPECTION OF REINFORCING STEEL WELDING IN ACCORDANCE WITH TABLE 1704.3, ITEM 5B.	X	
3.	INSPECTION OF ANCHORS CAST IN CONCRETE WHERE ALLOWABLE LOADS HAVE BEEN INCREASED OR WHERE STRENGTH DESIGN IS USED.		X
4.	INSPECTION OF ANCHORS POST-INSTALLED IN HARDENED CONCRETE MEMBERS.	X	
5.	VERIFYING USE OF REQUIRED DESIGN MIX.		X
6.	AT THE TIME FRESH CONCRETE IS SAMPLED TO FABRICATE SPECIMENS FOR STRENGTH TESTS, PERFORM SLUMP AND AIR CONTENT TESTS, AND DETERMINE THE TEMPERATURE OF THE CONCRETE.	X	
7.	INSPECTION OF CONCRETE AND SHOTCRETE PLACEMENT FOR PROPER APPLICATION TECHNIQUES.	X	
8.	INSPECTION FOR MAINTENANCE OF SPECIFIED CURING TEMPERATURE AND TECHNIQUES.		X
9.	INSPECT FORMWORK FOR SHAPE, LOCATION AND DIMENSIONS OF THE CONCRETE MEMBER BEING FORMED.		X
	SPECIAL PROVISIONS FOR SEISMIC RESISTANCE		
10.	VERIFY SUBMITTAL OF CERTIFIED MILL TEST REPORTS FOR EACH SHIPMENT OF REINFORCING STEEL USED IN BOUNDARY ELEMENTS OF SPECIAL REINFORCED CONCRETE SHEAR WALLS.		X
11.	TEST ASTM A 615 REINFORCING STEEL USED IN WALL BOUNDARY ELEMENTS OF SHEAR WALLS IN STRUCTURES ASSIGNED TO SEISMIC DESIGN CATEGORY D, E OR F, PER ACI 318.		X
12.	TEST ASTM A 615 REINFORCING STEEL THAT IS TO BE WELDED, CHEMICAL TESTS SHALL BE PERFORMED TO DETERMINE WELDABILITY IN ACCORDANCE WITH SECTION 3.5.2 OF ACI 318.		X

ITEM	WATERSTOP INSPECTIONS AND VERIFICATION	FREQUENCY	
		CONTINUOUS	PERIODIC
1.	INSPECTION OF FIELD WELDS OF WATERSTOP.		X
2.	MANUFACTURER SHALL PROVIDE FIELD TRAINING OF WATERSTOP WELDERS AND SPECIAL INSPECTORS.	---	---

ITEM	FOUNDATION INSPECTIONS AND VERIFICATION	FREQUENCY	
		CONTINUOUS	PERIODIC
	SOILS		
1.	VERIFY SUBGRADE MATERIALS BELOW THE FOOTING FOR DESIGN BEARING CAPACITY.		X
2.	VERIFY DEPTH OF EXCAVATION AND TYPE OF SUBGRADE MATERIALS REACHED.		X
3.	PERFORM CLASSIFICATION AND COMPACTION TESTING OF CONTROLLED BACKFILL MATERIALS.		X
4.	VERIFY MATERIALS USED, LAYERED THICKNESSES AND COMPACTION OF BACK FILLS.	X	
5.	VERIFY THE SUBGRADE AND SITE PREPARATIONS FOR CONTROLLED FILL.		X
	PIER FOUNDATIONS		
6.	OBSERVE DRILLING OPERATIONS TO MONITOR AND RECORD - DRILLED LENGTHS, DIAMETERS AND BELL SIZE (IF APPLICABLE) FOR EACH PIER.	X	
7.	VERIFY PLACEMENT LOCATIONS AND PLUMBNESS, CONFIRM PIER DIAMETERS, BELL DIAMETERS (IF APPLICABLE), LENGTHS, EMBEDMENT INTO BEDROCK (IF APPLICABLE) AND ADEQUATE END BEARING STRATA CAPACITY.	X	
8.	FOR CONCRETE PIERS, PERFORM ADDITIONAL INSPECTIONS IN ACCORDANCE WITH "CONCRETE INSPECTIONS AND VERIFICATION".	---	---

ITEM	INSPECTIONS AND VERIFICATION FOR SEISMIC RESISTANCE IN OTHER BUILDING SYSTEMS	FREQUENCY	
		CONTINUOUS	PERIODIC
	MECHANICAL & ELECTRICAL COMPONENTS		
1.	ANCHORAGE OF ELECTRICAL EQUIPMENT FOR EMERGENCY OR STANDBY POWER SYSTEMS IN STRUCTURES ASSIGNED TO SEISMIC DESIGN CATEGORY C, D, E OR F.		X
2.	PIPING SYSTEMS INTENDED TO CARRY FLAMMABLE, COMBUSTIBLE OR HIGHLY TOXIC CONTENTS AND THEIR ASSOCIATED MECHANICAL UNITS IN STRUCTURES ASSIGNED TO SEISMIC DESIGN CATEGORY C, D, E OR F.		X
3.	HVAC DUCTWORK THAT WILL CONTAIN HAZARDOUS MATERIALS IN STRUCTURES ASSIGNED TO SEISMIC DESIGN CATEGORY C, D, E OR F.		X
4.	VIBRATION ISOLATION SYSTEMS OF EQUIPMENT IN STRUCTURES ASSIGNED TO SEISMIC DESIGN CATEGORY C, D, E OR F WHERE THE CONSTRUCTION DOCUMENTS REQUIRE A NOMINAL CLEARANCE OF 0.25 INCHES (6.4 MM) OR LESS BETWEEN THE EQUIPMENT SUPPORT FRAME AND RESTRAINT.		X
	STORAGE RACKS AND ACCESS FLOORS		
1.	INSPECT THE ANCHORAGE OF ACCESS FLOORS AND STORAGE RACKS 8 FEET (2438 MM) OR GREATER IN HEIGHT IN STRUCTURES ASSIGNED TO SEISMIC DESIGN CATEGORY D, E OR F.		X

NOTATION:
"X" DENOTES EITHER CONTINUOUS OR PERIODIC INSPECTIONS.
"---" DENOTES AN ACTIVITY THAT IS EITHER A ONE TIME ACTIVITY OR ONE WHOSE FREQUENCY IS DEFINED IN SOME OTHER MANNER

DEFINITIONS:
CONTINUOUS - SPECIAL INSPECTION BY THE SPECIAL INSPECTOR WHO IS PRESENT WHEN AND WHERE THE WORK TO BE INSPECTED IS BEING PERFORMED (CBC, SECTION 202)

PERIODIC - SPECIAL INSPECTION BY THE SPECIAL INSPECTOR WHO IS INTERMITTENTLY PRESENT WHERE THE WORK TO BE INSPECTED IS BEING PERFORMED (CBC, SECTION 202)

SPECIAL INSPECTOR - A QUALIFIED PERSON EMPLOYED OR RETAINED BY THE OWNER AND APPROVED BY THE AUTHORITY HAVING JURISDICTION AS HAVING THE COMPETENCE NECESSARY TO INSPECT A PARTICULAR TYPE OF CONSTRUCTION REQUIRING SPECIAL INSPECTION.

ABBREVIATIONS:

Ø	DIAMETER
AB	ANCHOR BOLT
ACI	AMERICAN CONCRETE INSTITUTE
ADDL	ADDITIONAL
AISC	AMERICAN INSTITUTE OF STEEL CONSTRUCTION
AISI	AMERICAN IRON AND STEEL INSTITUTE
AITC	AMERICAN INSTITUTE OF TIMBER CONSTRUCTION
AL	ALUMINUM
ALT	ALTERNATE(ING)
APPROX	APPROXIMATE(LY)
AR	ANCHOR ROD
ARND	AROUND
ASCE	AMERICAN SOCIETY OF CIVIL ENGINEERS
ASTM	ASTM INTERNATIONAL
ATR	ALL-THREAD ROD
AWS	AMERICAN WELDING SOCIETY
B TO B	BACK TO BACK
BEJS	BRIDGE EXPANSION JOINT SYSTEM
BLDG	BUILDING
BLK	BLOCK(ING)
B.O.	BOTTOM OF
BOT	BOTTOM
BRG	BEARING
BTWN	BETWEEN
CBC	CALIFORNIA BUILDING CODE
C/C	CENTER TO CENTER
CHKD	CHECKERED
CIDH	CAST IN DRILLED HOLE
CIRC	CIRCUMFERENTIAL
CJ	CONSTRUCTION JOINT
CL	CENTERLINE
CLG	CEILING
CLKG	CAULKING
CLR	CLEAR
CMU	CONCRETE MASONRY UNIT
COL	COLUMN
CONC	CONCRETE
CONN	CONNECTION
CONST	CONSTRUCTION
CONT	CONTINUOUS
CRS	COURSE(S)
CRSI	CONCRETE REINFORCING STEEL INSTITUTE
CSK	COUNTERSINK
CTJ	CONTROL JOINT
CTR	CENTER (ED)
D	DEEP, DEPTH
d	PENNY
d_b	BAR DIAMETER
DEMO	DEMOLITION
DET	DETAIL
DF	DOUGLAS FIR
DIA	DIAMETER
DIAG	DIAGONAL
DIM	DIMENSION
DL	DEAD LOAD
DN	DOWN
DO.	DITTO
DP	DAMPROOFING
DR	DRAIN
DWG(S)	DRAWING(S)
DWL(S)	DOWEL(S)
(E)	EXISTING
EA	EACH
EB	EXPANSION BOLT
ECC	ECCENTRIC
ED	EQUIPMENT DRAIN
EF	EACH FACE
EL	ELEVATION
ELEC	ELECTRICAL
EMBED	EMBEDMENT
EN	EDGE NAILING
EOR	ENGINEER OF RECORD
EQ	EQUAL (LY)
EQUIP	EQUIPMENT
EQUIV	EQUIVALENT
ES	EACH SIDE
ESR	EVALUATION SERVICE REPORT
ETC	ETCETERA
EW	EACH WAY
EXP	EXPANSION
EXP JT	EXPANSION JOINT(S)
EXST	EXISTING
EXT	EXTERIOR
EY	EPOXY

f'c	CONCRETE COMPRESSIVE STRENGTH
f'm	MASONRY PRISM STRENGTH
FAB	FABRICATE (OR, ED)
FD	FLOOR DRAIN
FDN	FOUNDATION
FHMS	FLATHEAD MACHINE SCREW
FHWS	FLATHEAD WOOD SCREW
FIG	FIGURE
FIN	FINISH (ED)
FL	FLOOR
FLEX	FLEXIBLE
FRP	FIBERGLASS REINFORCED PLASTIC
FTG	FOOTING
FURN	FURNISHED
GA	GAGE
GALV	GALVANIZED
GALVS	GALVANIZED STEEL
GLB	GLUE LAMINATED BEAM
GR	GUARD RAIL
GRTG	GRATING
H.A.S.	HEADED ANCHOR STUD
HD	HAND
HDR	HEADER
HDWD	HARDWOOD
HGR	HANGER
HGT	HEIGHT
HOR	HORIZONTAL
HP	HIGH POINT
HR	HANDRAIL
HS	HIGH STRENGTH
HSS	HOLLOW STRUCTURAL SECTION
IAPMO-UES	INTERNATIONAL ASSOCIATION OF PLUMBING AND MECHANICAL OFFICIALS UNIFORM EVALUATION SERVICES
ICC	INTERNATIONAL CODE COUNCIL
ID	INSIDE DIAMETER
IE	INVERT ELEVATION
I.F.	INSIDE FACE
INT	INTERIOR
I.P.S.	IRON PIPE SIZE
JB	JUNCTION BAR(S)
JT	JOINT(S)
JT FLR	JOINT FILLER
L_d	DEVELOPMENT LENGTH
L_{dh}	DEVELOPMENT LENGTH STANDARD HOOK
L_s	CLASS B TENSION LAP SPLICE
LG	LONG
LLH	LONG LEG HORIZONTAL
LLV	LONG LEG VERTICAL
LNTL	LINTEL
LONG.	LONGITUDINAL
LP	LOW POINT
LT	LEFT
LW	LIGHTWEIGHT
MAS	MASONRY
MATL	MATERIAL
MAX	MAXIMUM
MB	MACHINE BOLT
MCJ	MASONRY CONTROL JOINT
MECH	MECHANICAL
MFR	MANUFACTURER
MIN	MINIMUM
MO	MASONRY OPENING
MTL	METAL
NAAMM	NATIONAL ASSOCIATION OF ARCHITECTURAL METAL MANUFACTURERS
NIC	NOT IN CONTRACT
NOM	NOMINAL
NSG	NON-SHRINK GROUT
NTS	NOT TO SCALE
O/E	OR EQUAL
OC	ON CENTER
OD	OUTSIDE DIAMETER
O.F.	OUTSIDE FACE
OPNG(S)	OPENING(S)
OPP	OPPOSITE
OPP HD	OPPOSITE HAND
OPT	OPTION (AL)

PJF	PREMOLDED JOINT FILLER
PL	PLATE
PLYWD	PLYWOOD
PM	PRESSED METAL
PRCST	PRECAST
PREFAB	PRE-FABRICATED
PSF	POUNDS PER SQUARE FOOT
PSI	POUNDS PER SQUARE INCH
PT	POINT
PT	PRESSURE TREATED
PVC	POLYVINYL CHLORIDE
PVMT	PAVEMENT
R	RISER
RAD	RADIUS
RC	REINFORCED CONCRETE
RD	ROOF DRAIN
REF	REFERENCE / REFER
REINF	REINFORCE (D, ING)
REQD	REQUIRED
REV	REVISION
RM	ROOM
RO	ROUGH OPENING
RT	RIGHT
SB	SOLID BLOCKING
SCHED	SCHEDULE
SECT	SECTION
SHT	SHEET
SIM	SIMILAR
SL	SLOPE
SLNT	SEALANT
SP	SPACE (S, ED)
SPEC	SPECIFICATION, SPECIFIED
SQ	SQUARE
SS	STAINLESS STEEL
SSMH	SANITARY SEWER MANHOLE
STD	STANDARD
STIF	STIFFENER
STIR.	STIRRUP (S)
STL	STEEL
STRUC	STRUCTURE (S, URAL)
STWY	STAIRWAY
SYM	SYMMETRICAL
T	TREAD (S)
T&B	TOP AND BOTTOM
T&G	TONGUE AND GROOVE
TD	TRENCH DRAIN
THD	THREADED
THK	THICK (NESS)
TJ	TOOLED JOINT
T.O.	TOP OF
TOC	TOP OF CONCRETE
TOS	TOP OF STEEL
T.O.W.	TOP OF WALL
TPER	THERMOPLASTIC ELASTOMERIC RUBBER
TRNSV	TRANSVERSE
TYP	TYPICAL
UON	UNLESS OTHERWISE NOTED
VERT	VERTICAL
VIF	VERIFY IN FIELD
VR	VAPOR RETARDER
W	WIDE
W/	WITH
WF	WIDE FLANGE
W/O	WITHOUT
WD	WIDTH / WOOD
WP	WORKING POINT
WPG	WATERPROOFING
WS	WATERSTOP
WT	WEIGHT
WWF	WELDED WIRE FABRIC

ABBREVIATION NOTES:

1. ABBREVIATIONS AND DESIGNATIONS FOR STEEL MEMBERS MAY BE FOUND IN THE CURRENT STEEL CONSTRUCTION MANUAL BY AISC.
2. ABBREVIATIONS OF TECHNICAL SOCIETIES AND TRADE ASSOCIATIONS MAY BE FOUND IN THE SPECIFICATIONS
3. WELDING SYMBOLS AND ABBREVIATIONS MAY BE FOUND IN AWS 2.4.
4. ABBREVIATIONS LISTED ARE FOR USE WITH STRUCTURAL DRAWINGS ONLY. SOME ABBREVIATIONS LISTED MAY NOT BE USED ON THE PLANS.

LEGEND:

GRATING:  SPAN DIRECTION WHERE APPLICABLE

SELECT FILL: 

PLANK GRATING: 

UNDISTURBED EARTH: 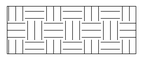

PAVEMENT OR SIDEWALK: 

VOID FORM: 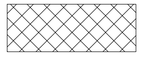

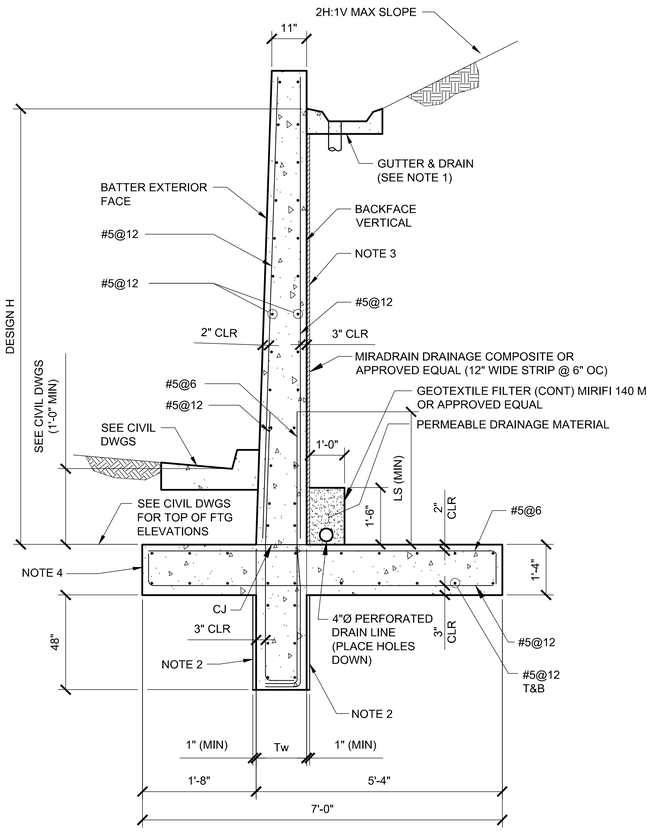

TABLE OF DIMENSIONS AND REINFORCING STEEL INFORMATION						
DESIGN H (MAX)	4'	6'	8'	10'	12'	14'
W	4'-6"	5'-9"	7'-0"	8'-6"	11'-1"	12'-7"
C	1'-0"	1'-4"	1'-8"	2'-0"	2'-6"	4'-0"
B	3'-6"	4'-5"	5'-4"	6'-6"	8'-7"	8'-7"
F	1'-4"	1'-4"	1'-4"	1'-4"	1'-4"	1'-6"
Tw (NOTE 2)	1'-1" MIN	1'-2" MIN	18"	1'-4" MIN	1'-5" MIN	1'-6" MIN
K	1'-0"	2'-0"	3'-0"	4'-0"	5'-1"	5'-9"
BATTER	1/2:12	1/2:12	1/2:12	1/2:12	1/2:12	1/2:12
'A' BARS	#5@12	#5@12	#5@6	#5@6	#5@6	#7@6
'B' BARS	#5@12	#5@12	#5@12	#5@12	#5@12	#5@6
'C' BARS	#5@12	#5@12	#5@6	#5@6	#7@6	#7@6
'D' BARS	#5@12	#5@12	#5@12	#5@12	#5@6	#5@6

NOTES:

1. PROVIDE GUTTER AND GUTTER OUTLET PER PROJECT SPECIFICATIONS.
2. WIDTH OF SHEAR KEY SHALL BE Tw + 2" MINIMUM (1" MINIMUM EACH FACE) TO PROVIDE 3" MINIMUM CONCRETE COVER TO REINFORCING STEEL. PLACE CONCRETE FOR SHEAR KEY AGAINST UNDISTURBED MATERIAL EXCEPT AS PERMITTED BY THE ENGINEER.
3. THICKNESS OF WALL IS CONTROLLED BY FINAL WALL HEIGHT, TOP OF WALL THICKNESS AND BATTER.
4. PLACE CONCRETE IN TOE AGAINST UNDISTURBED MATERIAL EXCEPT AS PERMITTED BY THE ENGINEER.

RETAINING WALL DETAIL 02006 VAR NTS

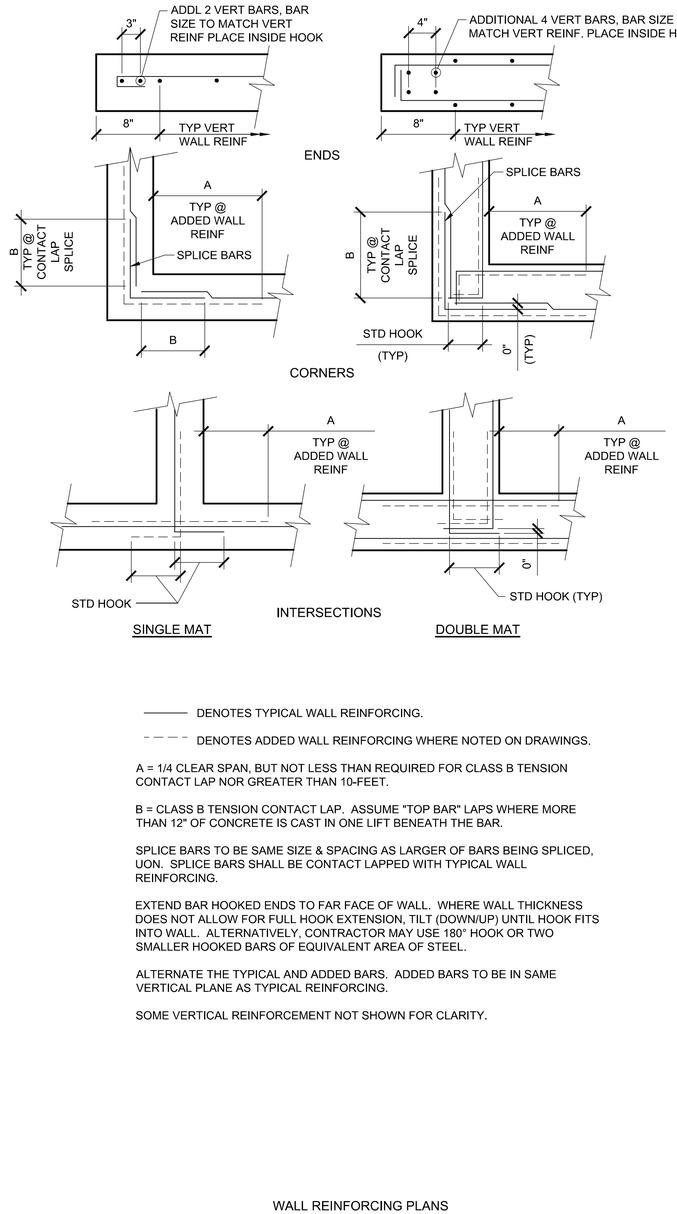

——— DENOTES TYPICAL WALL REINFORCING.

– – – – DENOTES ADDED WALL REINFORCING WHERE NOTED ON DRAWINGS.

A = 1/4 CLEAR SPAN, BUT NOT LESS THAN REQUIRED FOR CLASS B TENSION CONTACT LAP NOR GREATER THAN 10-FEET.

B = CLASS B TENSION CONTACT LAP. ASSUME "TOP BAR" LAPS WHERE MORE THAN 12" OF CONCRETE IS CAST IN ONE LIFT BENEATH THE BAR.

SPLICE BARS TO BE SAME SIZE & SPACING AS LARGER OF BARS BEING SPLICED, UON. SPLICE BARS SHALL BE CONTACT LAPPED WITH TYPICAL WALL REINFORCING.

EXTEND BAR HOOKED ENDS TO FAR FACE OF WALL. WHERE WALL THICKNESS DOES NOT ALLOW FOR FULL HOOK EXTENSION, TILT (DOWN/UP) UNTIL HOOK FITS INTO WALL. ALTERNATIVELY, CONTRACTOR MAY USE 180° HOOK OR TWO SMALLER HOOKED BARS OF EQUIVALENT AREA OF STEEL.

ALTERNATE THE TYPICAL AND ADDED BARS. ADDED BARS TO BE IN SAME VERTICAL PLANE AS TYPICAL REINFORCING.

SOME VERTICAL REINFORCEMENT NOT SHOWN FOR CLARITY.

WALL REINFORCING PLANS DETAIL 03001 VAR NTS

FILENAME: GS Sheets 9-19-22 11:51am BeeVue ||| XREFS:| X-SMCSD-TBLK |<<--

RECORD DRAWING
THIS RECORD DRAWING HAS BEEN PREPARED FROM THE ORIGINAL CONTRACT DOCUMENTS SIGNED AND SEALED BY THE RESPONSIBLE ENGINEER OF RECORD. ADDITIONAL INFORMATION HAS BEEN PROVIDED BY OTHERS TO REPRESENT AS-CONSTRUCTED CONDITION AND IS SHOWN ON THESE RECORD DRAWINGS. THE RESPONSIBLE ENGINEER OF RECORD CANNOT VERIFY THE ACCURACY OF THE AS-CONSTRUCTED CONDITION INFORMATION REPRESENTED ON THE RECORD DRAWINGS.

0" 1" VERIFY SCALES
BAR IS ONE INCH LONG ON FULL SIZE DRAWING. IF NOT ONE INCH LONG ON THIS DRAWING, ADJUST SCALES ACCORDINGLY

TJC and ASSOCIATES, INC.

Woodard & Curran

REV	DATE	BY	APVD	DESCRIPTION

DESIGNED	RKT
DRAWN	ADM
CHECKED	TJC

SUBMITTED: MARK TAKEMOTO, RMC PROJECT ENGINEER CE-64369

APPROVED: STEVE CLARY, RMC ENGINEER CE-30318

SAUSALITO · MARIN CITY SANITARY DISTRICT

TREATMENT AND WET WEATHER FLOW UPGRADE

ABBREVIATIONS & STANDARD DETAILS

DWG NO	S-3
SHEET NO	OF 226
PROJ NO	055-006
DATE	JULY 2022

Last Saved By: BeeVue 9-19-22 11:48am

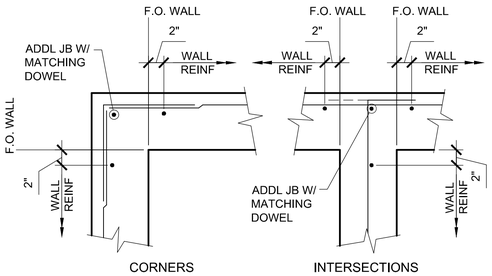

SINGLE MAT

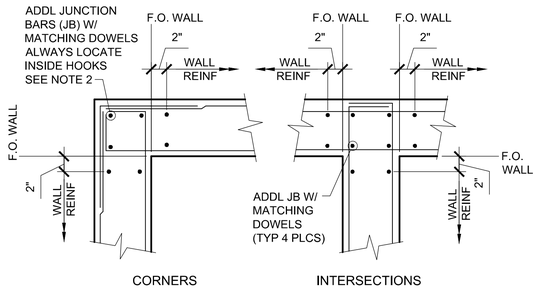

DOUBLE MAT

NOTES:

1. REINFORCING IS SHOWN FOR CLARITY ONLY. SEE PLANS AND SECTIONS FOR REINFORCING SIZES, SPACING, LOCATIONS AND DETAILS.
2. JUNCTION BARS SHALL BE SAME SIZE AS THE WALL VERTICAL REINFORCING EXCEPT WHERE OTHERWISE NOTED ON THE DETAILS OR DRAWINGS. THESE ARE ADDITIONAL BARS TO THOSE CALLED OUT FOR WALLS.
3. SEE PLANS AND SECTIONS FOR LOCATIONS OF JOINTS. SEE DETAIL FOR BALANCE OF INFORMATION.
4. UNLESS OTHERWISE NOTED, WITHIN CONTRACT DRAWINGS, REINFORCING BARS SHALL TERMINATE WITH A STANDARD HOOK. WHERE SECTION THICKNESS DOES NOT ALLOW FOR FULL HOOK EXTENSION, TILT HOOK UNTIL IT FITS. ALTERNATIVELY CONTRACTOR MAY USE 180° HOOK OR TWO SMALLER HOOKED BARS OF EQUIVALENT AREA OF STEEL.

03002 -

WALL REINFORCING PLANS

DETAIL 03001/A VAR
NTS

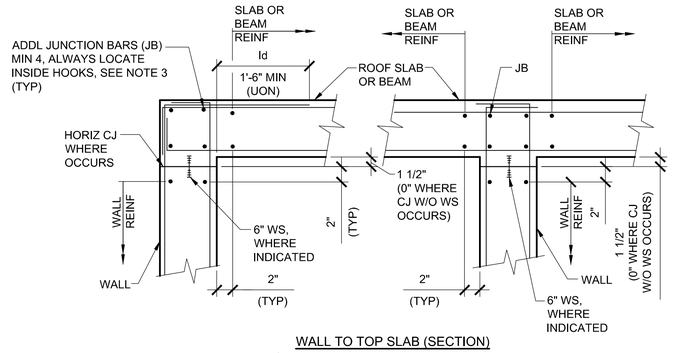

WALL TO TOP SLAB (SECTION)

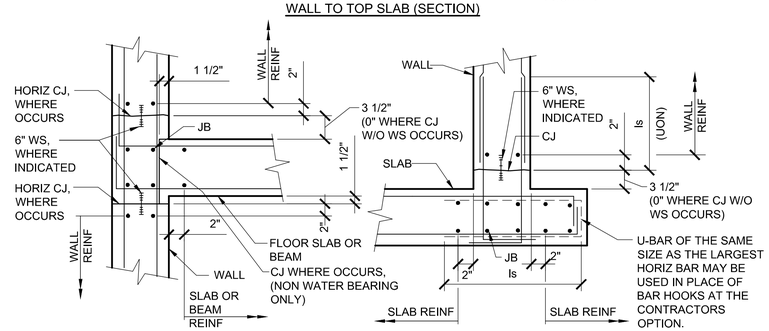

WALL TO INTERMEDIATE SLAB (SECTION)

WALL TO BOTTOM SLAB (SECTION)

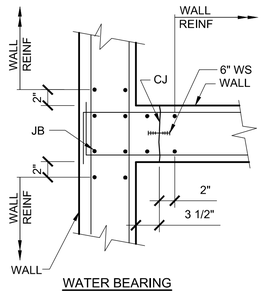

WATER BEARING

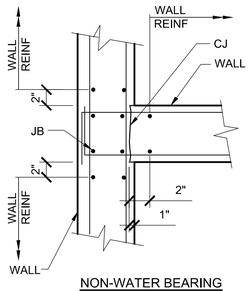

NON-WATER BEARING

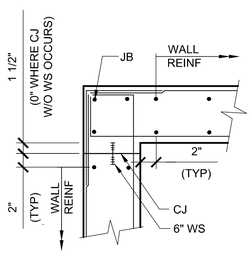

WALL TO WALL PLANS

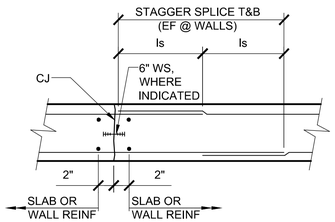

SLAB OR WALL CONTINUATION

CONSTRUCTION JOINT (CJ)

DETAIL 03002 VAR
NTS

CONSTRUCTION JOINT NOTES:

1. REINFORCING SHOWN IS FOR CLARITY ONLY. SEE PLANS AND SECTIONS FOR REINFORCING SIZES, SPACING, LOCATION AND DETAILS.
2. ALL SURFACES SHALL BE PREPARED IN ACCORDANCE WITH PROJECT SPECIFICATIONS.
3. JUNCTION BARS SHALL BE SAME SIZE AS THE LARGER OF WALL OR SLAB REINFORCING EXCEPT WHERE OTHERWISE NOTED ON THE DETAILS OR DRAWINGS. THESE ARE ADDITIONAL BARS TO THOSE CALLED OUT FOR WALLS & SLABS.
4. ALL LAP SPLICES SHALL BE CLASS B TENSION CONTACT LAP.
5. WATERSTOP SHALL BE PLACED AT CENTER OF WALL OR SLAB, UNLESS OTHERWISE NOTED.
6. UNLESS OTHERWISE NOTED WATERSTOP SHALL BE PLACED AT ALL CONSTRUCTION JOINTS FOR BELOW GRADE OR WATER RETENTION STRUCTURES.
7. SEE PLANS & SECTIONS FOR LOCATION OF JOINTS.
8. WHERE SECTION THICKNESS DOES NOT ALLOW FOR FULL HOOK EXTENSION. ROTATE HOOK UNTIL HOOK FITS. ALTERNATIVELY, CONTRACTOR MAY USE 180° HOOK OR TWO SMALLER HOOKED BARS OF EQUIVALENT AREA OF STEEL.

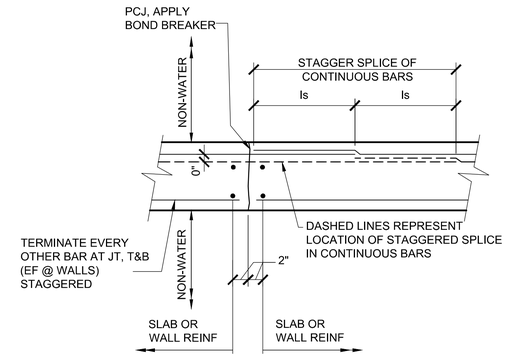

NON-WATER RETENTION SLAB OR WALL

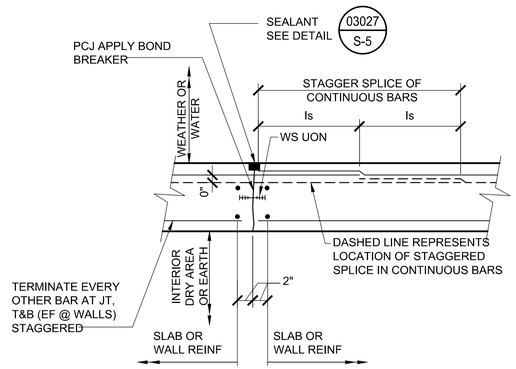

WATER RETENTION SLAB OR WALL

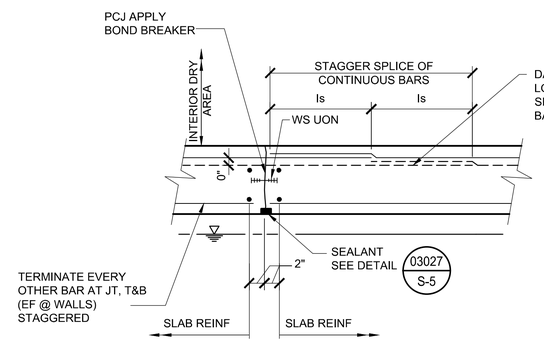

WATER RETENTION ELEVATED SLAB

PARTIAL CONTRACTION JOINT NOTES:

1. ALL SURFACES SHALL BE ROUGHENED AND PREPARED IN ACCORDANCE WITH PROJECT SPECIFICATIONS.
2. REINFORCING SHOWN IS FOR CLARITY ONLY. SEE PLANS AND SECTIONS FOR REINFORCING SIZES AND LOCATIONS.
3. ALL LAP SPLICES SHALL BE CLASS B TENSION CONTACT LAP OR 2'-0", WHICHEVER IS GREATER. ASSUME "TOP BAR" LAPS WHERE MORE THAN 12" OF CONCRETE IS CAST IN ONE LIFT BENEATH THE BAR.

CONTROL JOINT (CTJ)

DETAIL 03003 VAR
NTS

RECORD DRAWING
THIS RECORD DRAWING HAS BEEN PREPARED FROM THE ORIGINAL CONTRACT DOCUMENTS SIGNED AND SEALED BY THE RESPONSIBLE ENGINEER OF RECORD. ADDITIONAL INFORMATION HAS BEEN PROVIDED BY OTHERS TO REPRESENT AS-CONSTRUCTED CONDITION AND IS SHOWN ON THESE RECORD DRAWINGS. THE RESPONSIBLE ENGINEER OF RECORD CANNOT VERIFY THE ACCURACY OF THE AS-CONSTRUCTED CONDITION INFORMATION REPRESENTED ON THE RECORD DRAWINGS.

0" 1" VERIFY SCALES BAR IS ONE INCH LONG ON FULL SIZE DRAWING. IF NOT ONE INCH LONG ON THIS DRAWING, ADJUST SCALES ACCORDINGLY

TJC and ASSOCIATES, INC.

Woodard & Curran

REV	DATE	BY	APVD	DESCRIPTION

DESIGNED	RKT
DRAWN	ADM
CHECKED	TJC

SUBMITTED: MARK TAKEMOTO, RMC PROJECT ENGINEER CE-64369

APPROVED: STEVE CLARY, RMC ENGINEER CE-30318

SAUSALITO · MARIN CITY SANITARY DISTRICT

TREATMENT AND WET WEATHER FLOW UPGRADE

STANDARD DETAILS

DWG NO	S-4
SHEET NO	OF 226
PROJ NO	055-006
DATE	JULY 2022

FILENAME: GS Sheets 9-19-22 11:52am BeeVue || XREFS:| X-SMCSD-TBLK |<<--

Last Saved By: BeeVue 9-19-22 11:48am

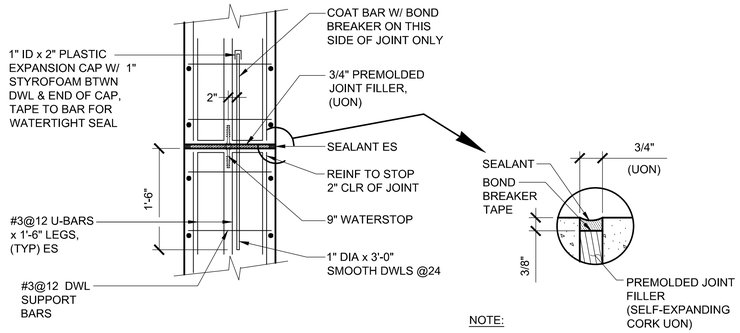

NOTE:

FOR LOCATIONS REQUIRING SEALANT AND WATERSTOPS, SEE CONCRETE JOINT NOTES AND DRAWINGS. ELSEWHERE PROVIDE EDGE CHAMFER, EXCEPT ON UNDERSIDE OF SLAB.

EXPANSION JOINT (EXP JT)

DETAIL NTS 03004 VAR

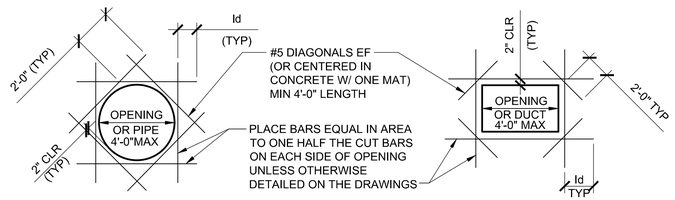

NOTES:

1. PROVIDE STANDARD HOOK IF INDICATED LENGTH IS NOT POSSIBLE.
2. REINFORCING STEEL IS TO BE CARRIED ACROSS ALL CONSTRUCTION JOINTS.
3. DETAIL IS TYPICAL FOR ALL OPENINGS GREATER THAN 10 INCHES AND LESS THAN OR EQUAL TO 4 FEET IN THE LARGER DIMENSION IN CONCRETE WALLS AND SLABS UNLESS OTHERWISE DETAILED ON THE DRAWINGS.
4. EXTRA BARS ARE NOT REQUIRED AT AN OPENING EDGE PARALLEL TO AND WITHIN 6 INCHES OF A WALL OR BEAM.

ADDITIONAL TRIM REINFORCEMENT AT OPENINGS

DETAIL NTS 03025 VAR

f'c (PSI) CONCRETE	BAR SIZE	ld (INCHES) TOP BAR	ld (INCHES) OTHER	ls (INCHES) TOP BAR	ls (INCHES) OTHER	ldh (INCHES)
2500	#3	24	19	32	25	9
	#4	32	25	42	33	12
	#5	39	30	51	39	15
	#6	47	37	62	49	18
3000	#3	22	17	29	23	9
	#4	29	23	38	30	11
	#5	36	28	47	37	14
	#6	43	34	56	45	17
4500	#3	18	14	24	19	7
	#4	24	19	32	25	9
	#5	30	24	39	32	12
	#6	35	27	46	36	14
	#7	51	40	67	52	16
	#8	59	46	77	60	18
	#9	66	51	86	67	21
	#10	74	57	97	75	23

NOTES:

1. ld: DEVELOPMENT LENGTH FOR A STRAIGHT REINFORCING BAR IN TENSION.
   ls: CLASS B TENSION LAP SPLICE LENGTH.
   ldh: DEVELOPMENT LENGTH FOR STANDARD HOOKS IN TENSION.
2. LAP SPLICES SHALL BE CLASS B TENSION CONTACT LAP SPLICES TYPICAL, UNLESS OTHERWISE NOTED ON DRAWINGS.
3. TOP BAR IS ANY HORIZONTAL BAR WITH MORE THAN 12" CONCRETE CAST IN ONE LIFT BENEATH THE BAR.
4. SPLICES IN HORIZONTAL BARS SHALL BE STAGGERED.
5. UNLESS OTHERWISE DETAILED ON THE DRAWINGS, SPLICES IN TWO CURTAINS SHALL NOT OCCUR IN THE SAME LOCATION.

LAP SPLICE LENGTH

DETAIL NTS 03026 VAR

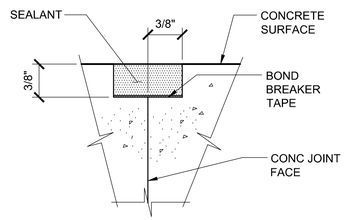

NOTE:

DO NOT COAT SEALANT GROOVE WITH BOND BREAKER.

SEALANT GROOVE

DETAIL NTS 03027 VAR

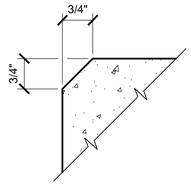

UON ON DRAWINGS

CONCRETE CHAMFER

DETAIL NTS 03028 VAR

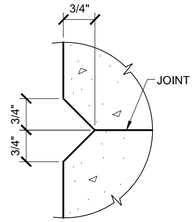

V-GROOVE JOINT

DETAIL NTS 03029 VAR

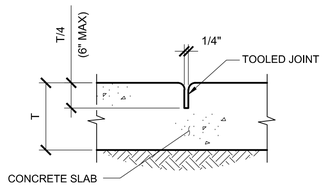

TOOLED CONTROL JOINT

DETAIL NTS 03030 VAR

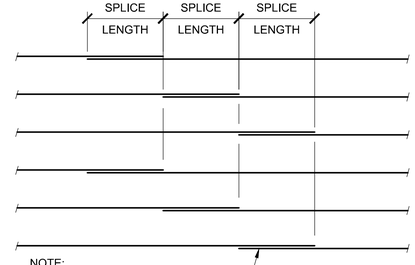

NOTE:

SPLICE LENGTH IS CLASS B TENSION CONTACT LAP SPLICE (3'-0" MIN)

PARTIAL WALL ELEVATION

CIRCULAR CONCRETE TANK WALL STAGGERED SPLICE

DETAIL NTS 03031 VAR

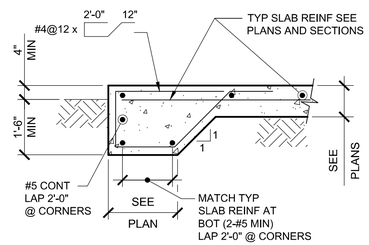

THICKENED SLAB EDGE

DETAIL NTS 03032 VAR

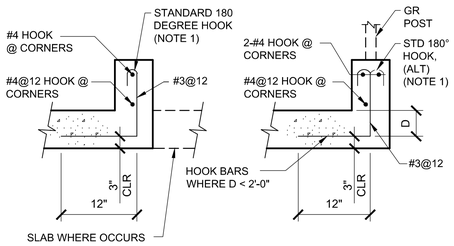

SEE PLANS FOR CURB DIMENSIONS

TYPE I TYPE II

NOTE:

1. WHERE CURB SECTION DOES NOT ALLOW FOR FULL HOOK EXTENSION, ROTATE HOOK UNTIL IT FITS.

CONCRETE CURB

DETAIL NTS 03033 VAR

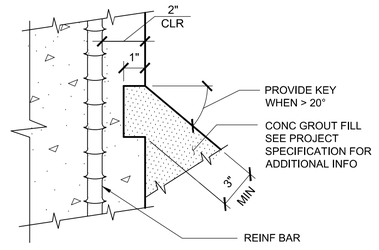

KEY AT CONCRETE FILL

DETAIL NTS 03034 VAR

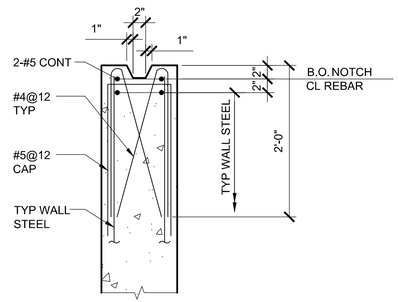

STOP LOG

DETAIL NTS 03037 VAR

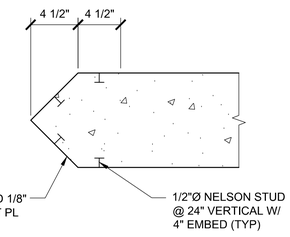

NOTE:

1. EXTEND NOSING UP TO ALLOW GRATING TO BE SUPPORTED UPON IT.

NOSEGUARD

DETAIL NTS 03038 VAR

RECORD DRAWING

THIS RECORD DRAWING HAS BEEN PREPARED FROM THE ORIGINAL CONTRACT DOCUMENTS SIGNED AND SEALED BY THE RESPONSIBLE ENGINEER OF RECORD. ADDITIONAL INFORMATION HAS BEEN PROVIDED BY OTHERS TO REPRESENT AS-CONSTRUCTED CONDITION AND IS SHOWN ON THESE RECORD DRAWINGS. THE RESPONSIBLE ENGINEER OF RECORD CANNOT VERIFY THE ACCURACY OF THE AS-CONSTRUCTED CONDITION INFORMATION REPRESENTED ON THE RECORD DRAWINGS.

0" — 1" VERIFY SCALES BAR IS ONE INCH LONG ON FULL SIZE DRAWING. IF NOT ONE INCH LONG ON THIS DRAWING, ADJUST SCALES ACCORDINGLY

TJC and ASSOCIATES, INC.

Woodard & Curran

REV	DATE	BY	APVD	DESCRIPTION

DESIGNED	RKT
DRAWN	ADM
CHECKED	TJC

SUBMITTED: MARK TAKEMOTO, RMC PROJECT ENGINEER CE-64369

APPROVED: STEVE CLARY, RMC ENGINEER CE-30318

SAUSALITO · MARIN CITY SANITARY DISTRICT

TREATMENT AND WET WEATHER FLOW UPGRADE

STANDARD DETAILS

DWG NO	S-5
SHEET NO	OF 226
PROJ NO	055-006
DATE	JULY 2022

FILENAME: GS Sheets 9-19-22 11:52am BeeVue || XREFS:| X-SMCSD-TBLK |<<--

Last Saved By: BeeVue 9-19-22 11:48am

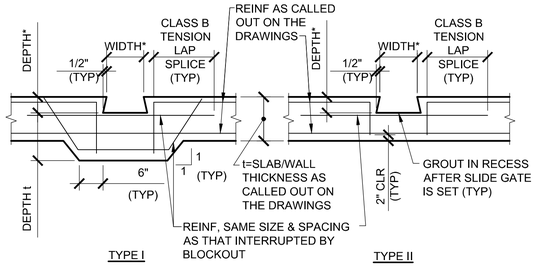

NOTES:

1. * BLOCKOUT DIMENSIONS PER MANUFACTURER.
2. USE TYPE I BLOCKOUT AT SLAB & WALLS UNLESS OTHERWISE NOTED ON DRAWINGS.

SLIDE GATE BLOCKOUT

DETAIL 03039 VAR
NTS

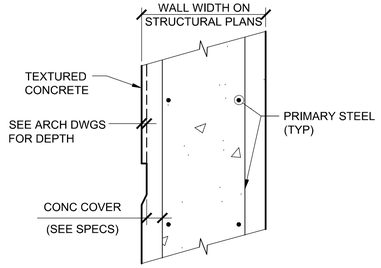

CONCRETE COVER AT TEXTURED CONCRETE WALL HEADWORKS

DETAIL 03040 VAR
NTS

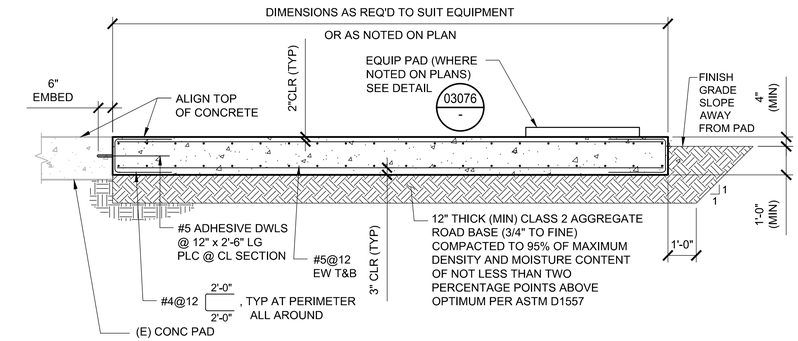

EXTERIOR EQUIPMENT SLAB

DETAIL 03074 VAR
NTS

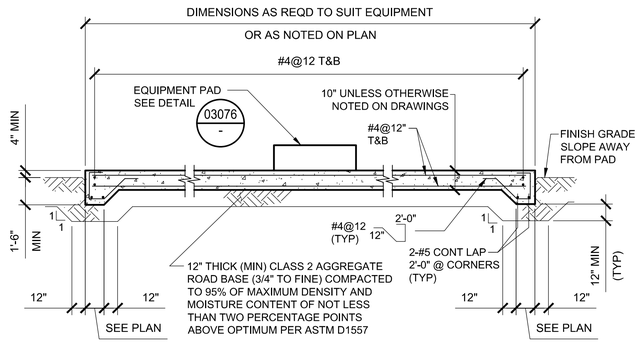

EXTERIOR EQUIPMENT SLAB

DETAIL 03075 VAR
NTS

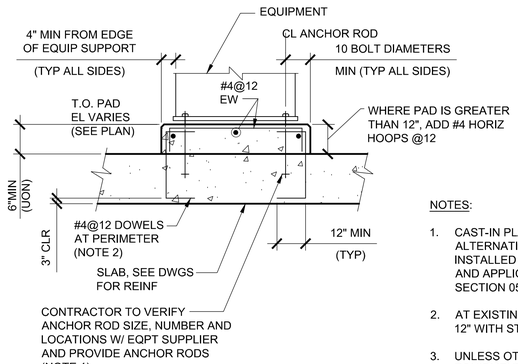

NOTES:

1. CAST-IN PLACE ANCHOR ROD SHOWN. AS AN ALTERNATIVE, CONTRACTOR MAY USE POST INSTALLED CONCRETE ANCHORS AT LOCATIONS AND APPLICATIONS WHERE PERMITTED IN SECTION 05500 OF THE CONTRACT DOCUMENTS.
2. AT EXISTING SLAB USE #4 ADHESIVE DOWELS AT 12" WITH STANDARD HOOK INTO EQUIPMENT PAD.
3. UNLESS OTHERWISE NOTED ON PLANS TOP OF EQUIPMENT PAD SHALL BE LEVEL.

EQUIPMENT PAD

DETAIL 03076 VAR
NTS

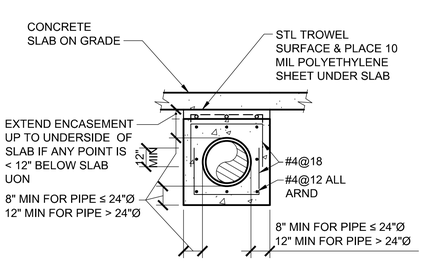

NOTE:

CONCRETE ENCASEMENT SHALL EXTEND BEYOND STRUCTURE TO FIRST PIPE JOINT, UNLESS OTHERWISE NOTED.

PIPE ENCASEMENT

DETAIL 03084 VAR
NTS

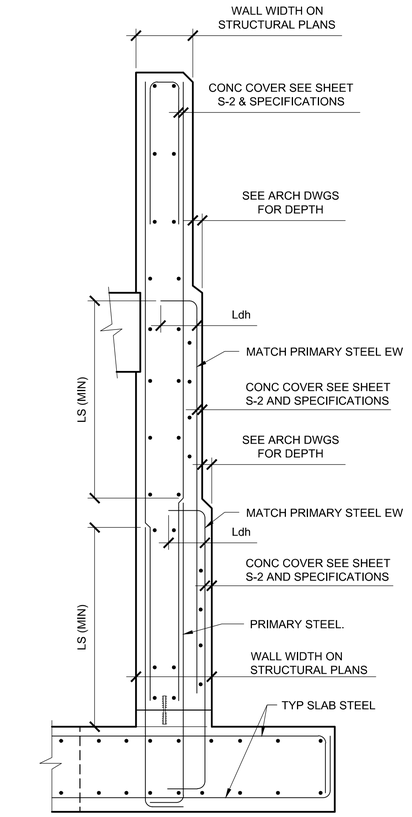

CONCRETE COVER AT ARCHITECTURAL TEXTURED CLARIFIER WALL

DETAIL 03041 VAR
NTS

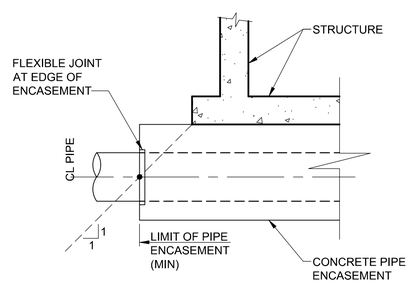

ENCASEMENT LIMITS

DETAIL 03086 VAR
NTS

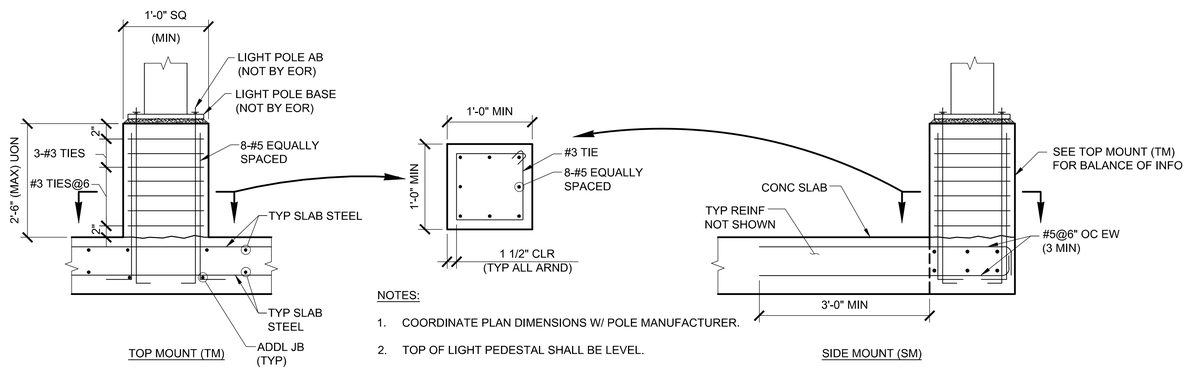

NOTES:

1. COORDINATE PLAN DIMENSIONS W/ POLE MANUFACTURER.
2. TOP OF LIGHT PEDESTAL SHALL BE LEVEL.

LIGHT PEDESTAL

DETAIL 03087 VAR
NTS

FILENAME: GS Sheets 9-19-22 11:52am BeeVue || XREFS:| X-SMCSD-TBLK |<<--

RECORD DRAWING
THIS RECORD DRAWING HAS BEEN PREPARED FROM THE ORIGINAL CONTRACT DOCUMENTS SIGNED AND SEALED BY THE RESPONSIBLE ENGINEER OF RECORD. ADDITIONAL INFORMATION HAS BEEN PROVIDED BY OTHERS TO REPRESENT AS-CONSTRUCTED CONDITION AND IS SHOWN ON THESE RECORD DRAWINGS. THE RESPONSIBLE ENGINEER OF RECORD CANNOT VERIFY THE ACCURACY OF THE AS-CONSTRUCTED CONDITION INFORMATION REPRESENTED ON THE RECORD DRAWINGS.

0" 1" VERIFY SCALES
BAR IS ONE INCH LONG ON FULL SIZE DRAWING. IF NOT ONE INCH LONG ON THIS DRAWING, ADJUST SCALES ACCORDINGLY

TJC and ASSOCIATES, INC.

Woodard & Curran

REV	DATE	BY	APVD	DESCRIPTION

DESIGNED	RKT
DRAWN	ADM
CHECKED	TJC

SUBMITTED: MARK TAKEMOTO
RMC PROJECT ENGINEER CE-64369

APPROVED: STEVE CLARY
RMC ENGINEER CE-30318

SAUSALITO · MARIN CITY SANITARY DISTRICT

TREATMENT AND WET WEATHER FLOW UPGRADE

STANDARD DETAILS

DWG NO	S-6
SHEET NO	OF 226
PROJ NO	055-006
DATE	JULY 2022

Last Saved By: BeeVue 9-19-22 11:48am

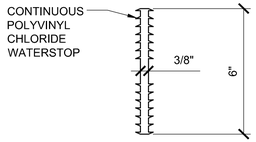

SEE JT NOTES & DWGS FOR REQD LOCATIONS

6" PVC JOINT WATERSTOP

DETAIL 03102 VAR
NTS

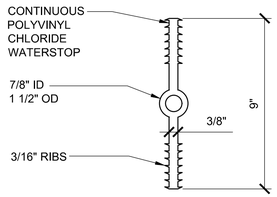

SEE JT NOTES & DWGS FOR REQD LOCATIONS

9" PVC EXPANSION JOINT WATERSTOP

DETAIL 03103 VAR
NTS

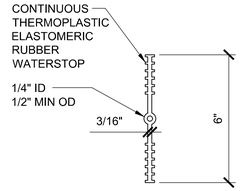

6" TPER JOINT WATERSTOP

DETAIL 03104 VAR
NTS

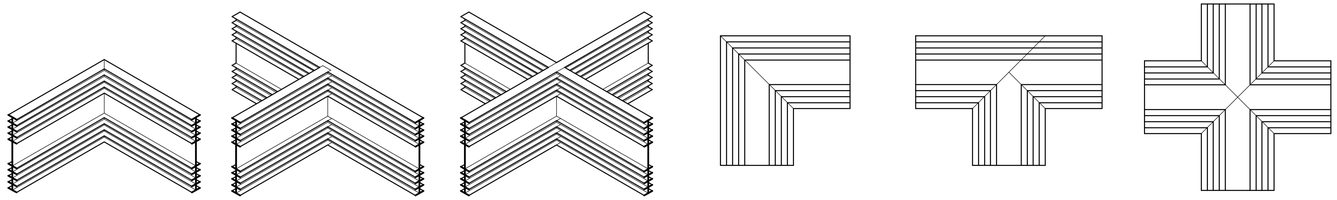

VERTICAL ELL | VERTICAL TEE | VERTICAL CROSS | FLAT ELL | FLAT TEE | FLAT CROSS

NOTES:

1. PVC WATERSTOPS SHOWN, SIMILAR FOR THERMOPLASTIC ELASTOMERIC RUBBER WATERSTOPS.
2. ALL FITTINGS SHALL BE FACTORY MADE OR SHOP WELDED IN ACCORDANCE WITH MANUFACTURERS RECOMMENDATIONS.
3. ONLY STRAIGHT BUTT SPLICES MAY BE MADE IN FIELD.

WATERSTOP FITTINGS

DETAIL 03106 VAR
NTS

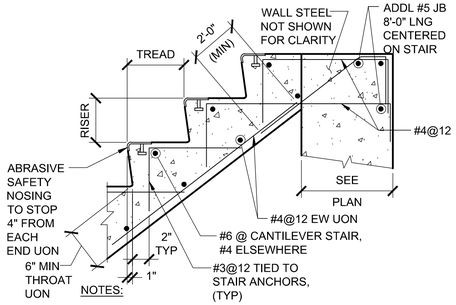

NOTES:

1. NOSING SHALL NOT BE USED WHERE CONTAINMENT COATING IS APPLIED.
2. RAILING NOT SHOWN, SEE DRAWINGS.

CONCRETE STAIR

DETAIL 03125 VAR
NTS

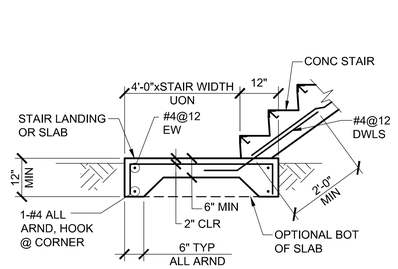

CONCRETE STAIR

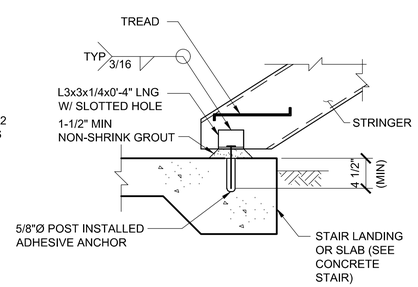

METAL STAIR

STAIR TO CONCRETE SLAB CONNECTION

DETAIL 03127 VAR
NTS

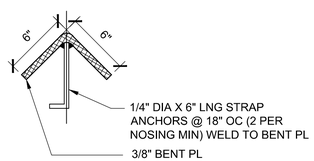

NOTES:

1. ALL ALUMINUM CONSTRUCTION (UON)
2. ALUMINUM IN CONTACT WITH OR EMBEDDED IN CONCRETE SHALL RECEIVE A BITUMINOUS OR SIMILAR COATING.

STAIR NOSING

DETAIL 03129 VAR
NTS

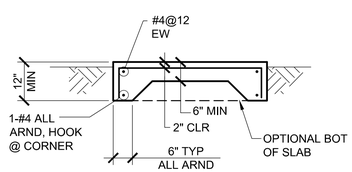

CONCRETE LANDING

DETAIL 03131 VAR
NTS

FILENAME: GS Sheets 9-19-22 11:52am BeeVue || XREFS: X-SMCSD-TBLK |<<--

RECORD DRAWING
THIS RECORD DRAWING HAS BEEN PREPARED FROM THE ORIGINAL CONTRACT DOCUMENTS SIGNED AND SEALED BY THE RESPONSIBLE ENGINEER OF RECORD. ADDITIONAL INFORMATION HAS BEEN PROVIDED BY OTHERS TO REPRESENT AS-CONSTRUCTED CONDITION AND IS SHOWN ON THESE RECORD DRAWINGS. THE RESPONSIBLE ENGINEER OF RECORD CANNOT VERIFY THE ACCURACY OF THE AS-CONSTRUCTED CONDITION INFORMATION REPRESENTED ON THE RECORD DRAWINGS.

0" 1" VERIFY SCALES
BAR IS ONE INCH LONG ON FULL SIZE DRAWING. IF NOT ONE INCH LONG ON THIS DRAWING, ADJUST SCALES ACCORDINGLY

TJC and ASSOCIATES, INC.

Woodard & Curran

REV	DATE	BY	APVD	DESCRIPTION

DESIGNED	RKT
DRAWN	ADM
CHECKED	TJC

SUBMITTED: MARK TAKEMOTO
RMC PROJECT ENGINEER CE-64369

APPROVED: STEVE CLARY
RMC ENGINEER CE-30318

SAUSALITO · MARIN CITY SANITARY DISTRICT

TREATMENT AND WET WEATHER FLOW UPGRADE

STANDARD DETAILS

DWG NO	S-7
SHEET NO	OF 226
PROJ NO	055-006
DATE	JULY 2022

Last Saved By: BeeVue 9-19-22 11:48am

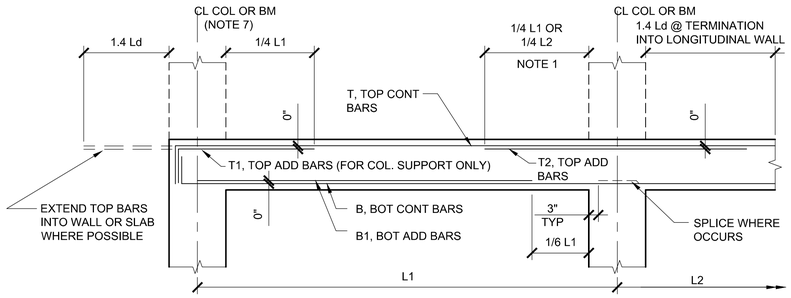

TYPE E-END SPAN

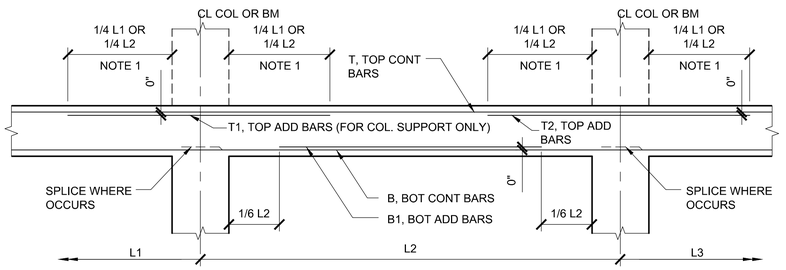

TYPE I-INTERIOR SPAN

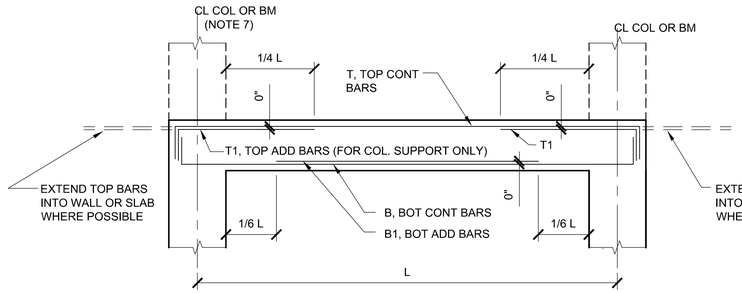

TYPE S-SINGLE SPAN

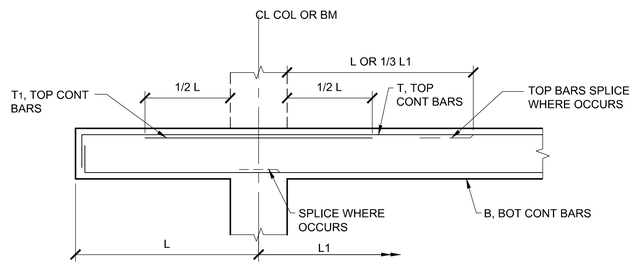

TYPE C - CANTILEVER SPAN
NON-DUCTILE BEAM LONGITUDINAL
REINFORCEMENT DETAIL

NOTES:

1. WHICHEVER IS GREATER, BUT NOT LESS THAN DEVELOPMENT LENGTH.
2. TOP CONTINUOUS BARS SPLICE AT MIDSPAN.
3. BOTTOM CONTINUOUS BARS SPLICE AT SUPPORT.
4. SIDE BARS TO BE CONTINUOUS, STAGGER SPLICE AT MIDSPAN.
5. END SPAN AND CANTILEVER SPAN MAY BE OPPOSITE HAND.
6. SEE TYPICAL DETAIL SHEET FOR REQUIRED LAP SPLICES.
7. AT CONTRACTOR'S OPTION MAY SUBSTITUTE REBAR TERMINATORS IN-LIEU OF STANDARD HOOKS.
8. BEAM DEPTHS SHOWN ARE MINIMUMS.

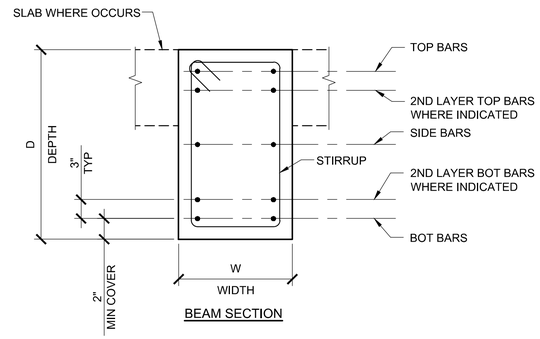

BEAM SECTION

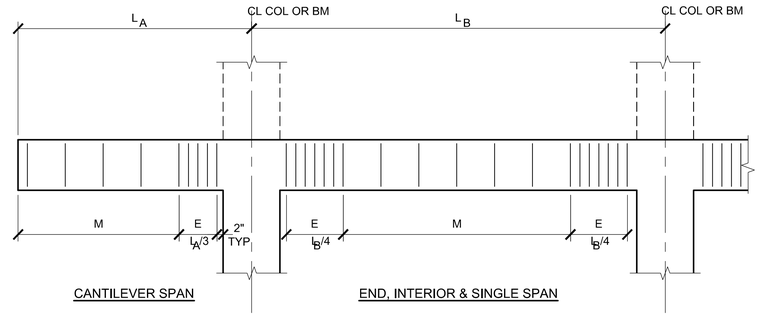

CANTILEVER SPAN END, INTERIOR & SINGLE SPAN

STIRRUP SPACING LAYOUT

Beam Schedule												
Mark	Size WxD (NOTE 8)	Type	Longitudinal Reinforcement Bottom B	Bottom B1	Top T	Top T1	Top T2	Side Bars EF	Stirrups Size & Type	Stirrups Spacing E	Stirrups Spacing M	Remarks
30-1	18x18	VARIES	3-#6	-	3-#6	-	-	#5@12	#4-A2	4	8	
100-1	18xVARIES	S	-	-	-	-	-	#5@12	#3-B2	12	8	FOOTNOTE 1
100-2	18x36	S	4-#10	-	4-#10	-	-	4-#9	#4-A4	4	8	
100-3	12x18	S	3-#6	-	3-#6	-	-	#5@12	#4-A2	4	8	
100-4	12x18	S	3-#6	-	3-#6	-	-	#5@12	#4-A2	4	8	
100-5	12x18	S	3-#6	-	3-#6	-	-	#5@12	#4-A2	4	8	
100-6	12x18	S	3-#6	-	3-#6	-	-	#5@12	#4-A2	4	8	
100-7	12x18	I	3-#6	-	3-#6	-	-	#5@12	#4-A2	4	8	
100-8	12x18	I	3-#6	-	3-#6	-	-	#5@12	#4-A2	4	8	
100-9	18x36	S	4-#7	-	4-#7	-	-	#5@12	#4-A2	4	8	
100-10	18xVARIES	S	4-#7	-	4-#7	-	-	#5@12	#4-B2	8	12	
100-11	12x18	C	2-#6	-	2-#6	-	-	-	#4-A2	6	6	
100-12	18x36	C	3-#6	-	3-#6	-	-	6-#7	#4-A2	4	4	
100-13	18x78	S	3-#6	-	3-#6	-	-	#5@12	#4-A2	4	8	

FOOTNOTE:

1. 4-#9 SIDE BARS AT SOUTHERN END ONLY, EXTEND 1/4(L) INTO BEAM. LAP WITH #5@12 SIDE BARS REMAINDER OF BEAM.

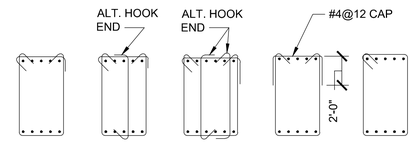

STIRRUP TYPES

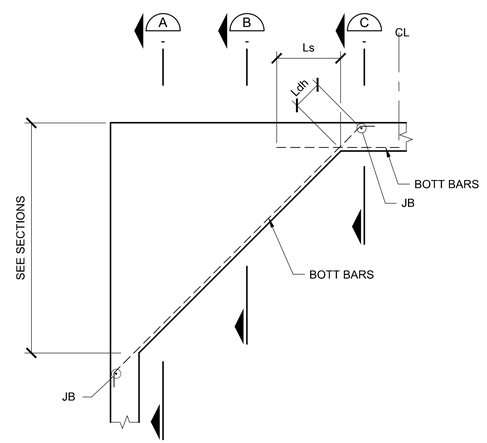

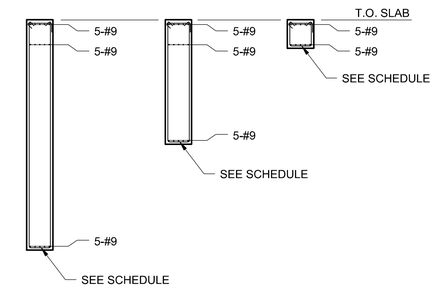

SECTION A SECTION B SECTION C

BM 100-1

SCHEDULE AND BEAM DETAILS

DETAIL 03301
NTS VAR

RECORD DRAWING
THIS RECORD DRAWING HAS BEEN PREPARED FROM THE ORIGINAL CONTRACT DOCUMENTS SIGNED AND SEALED BY THE RESPONSIBLE ENGINEER OF RECORD. ADDITIONAL INFORMATION HAS BEEN PROVIDED BY OTHERS TO REPRESENT AS-CONSTRUCTED CONDITION AND IS SHOWN ON THESE RECORD DRAWINGS. THE RESPONSIBLE ENGINEER OF RECORD CANNOT VERIFY THE ACCURACY OF THE AS-CONSTRUCTED CONDITION INFORMATION REPRESENTED ON THE RECORD DRAWINGS.

0" 1"
VERIFY SCALES
BAR IS ONE INCH
LONG ON FULL
SIZE DRAWING.
IF NOT ONE INCH
LONG ON THIS
DRAWING, ADJUST
SCALES ACCORDINGLY

REV	DATE	BY	APVD	DESCRIPTION

DESIGNED	RKT
DRAWN	ADM
CHECKED	TJC

SUBMITTED: MARK TAKEMOTO
RMC PROJECT ENGINEER CE-64369

APPROVED: STEVE CLARY
RMC ENGINEER CE-30318

TREATMENT AND WET WEATHER FLOW UPGRADE

STANDARD DETAILS

DWG NO	S-8
SHEET NO	OF 226
PROJ NO	055-006
DATE	JULY 2022

FILENAME: GS Sheets 9-19-22 11:53am BeeVue || XREFS:| X-SMCSD-TBLK |<<--

Last Saved By: BeeVue 9-19-22 11:48am

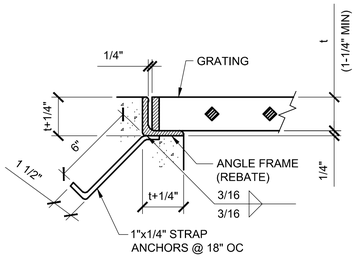

NOTES:

1. t = GRATING THICKNESS SEE GRATING NOTES
2. SIMILAR FOR PLANK GRATING

GRATING SEAT

DETAIL 05051 VAR NTS

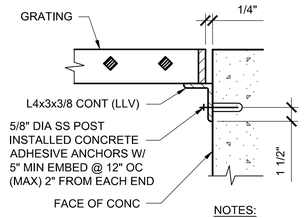

NOTES:

1. SIMILAR FOR PLANK GRATING

GRATING WALL SUPPORT

DETAIL 05052 VAR NTS

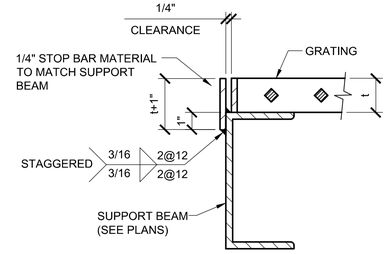

NOTES:

1. SIMILAR FOR PLANK GRATING

GRATING STOP PLATE

DETAIL 05053 VAR NTS

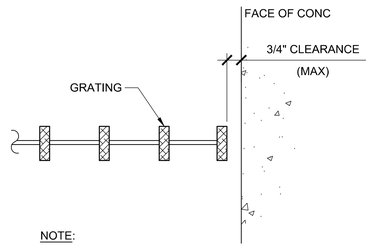

NOTE:

1. REFER TO PLANS AND PROJECT SPECIFICATIONS FOR GRATING THICKNESS (t) AND MATERIAL.
2. SIMILAR TO PLANK GRATING (NON-SUPPORT)

GRATING END CONDITION

DETAIL 05054 VAR NTS

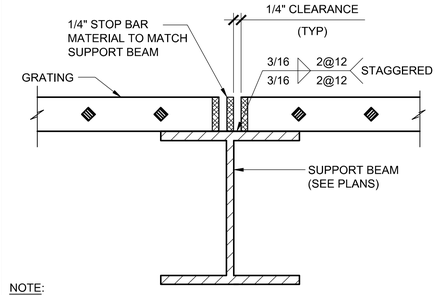

NOTE:

1. REFER TO PLANS AND PROJECT SPECIFICATIONS FOR GRATING THICKNESS (t) AND MATERIAL.
2. SIMILAR TO PLANK GRATING

INTERMEDIATE GRATING SUPPORT

DETAIL 05055 VAR NTS

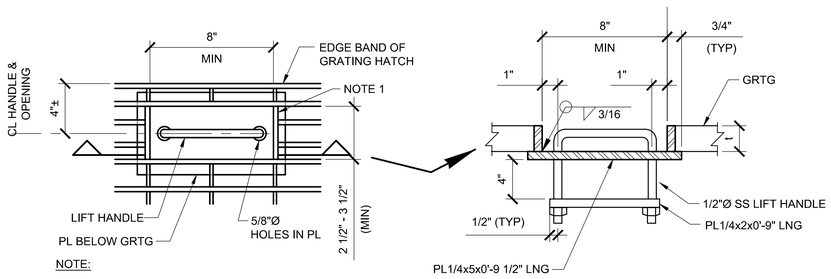

NOTE:

1. BAND EDGES OF GRATING OPENING WITH TYP BANDING.

PLAN

SECTION

NOTE:

1. REFER TO PLANS AND PROJECT SPECIFICATIONS FOR GRATING THICKNESS (t) AND MATERIAL.

LIFT HANDLE AT GRATING

DETAIL 05056 VAR NTS

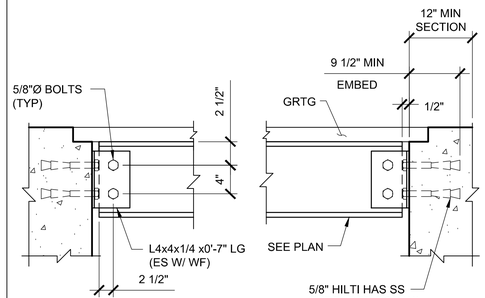

NOTES:

1. SIMILAR FOR PLANK GRATING

GRATING END SUPPORT

DETAIL 05058 VAR NTS

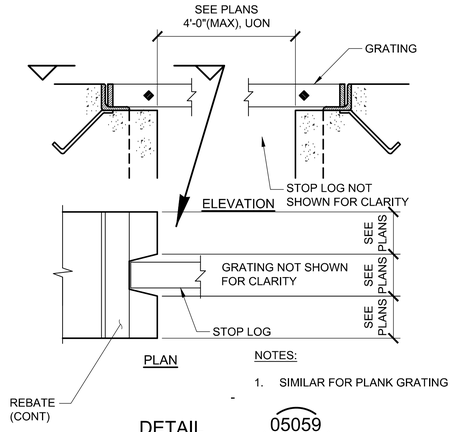

PLAN

NOTES:

1. SIMILAR FOR PLANK GRATING

DETAIL 05059 VAR NTS

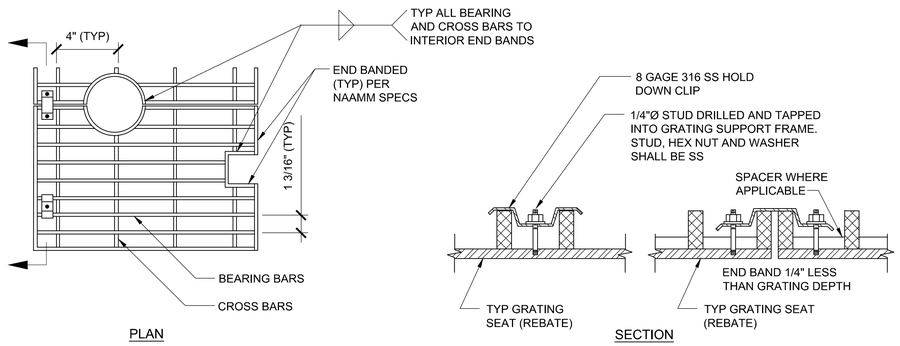

PLAN

SECTION

NOTES:

1. GRATING SHALL CONFORM TO THE METAL BAR GRATING MANUAL OF NAAMM. UNLESS OTHERWISE SPECIFIED, GRATING SHALL BE OF ALUMINUM.
2. GRATING SHALL BE SWAGED AND FORGED.
3. GRATING SHALL BE REMOVABLE.
4. PROVIDE 4 GRATING CLIPS APPROXIMATE 4" FROM THE CORNERS OF EACH PIECE. ADJACENT PIECES MAY BE ANCHORED WITH ONE CLIP AND TWO STUDS.
5. CLEAR SPAN SHALL BE PLAN DIMENSION, FACE TO FACE OF OPENING.
6. PROVIDE 1/8" THICK NEOPRENE ISOLATION BETWEEN ALUM GRATING AND GALVANIZED STEEL SUPPORTS.
7. END BAND TO BE A 1/4" LESS THAN GRATING DEPTH.
8. GRATING SHALL BE DESIGNED AS SPECIFIED IN SPECIFICATIONS UNLESS OTHERWISE SHOWN.

GRATING

DETAIL 05061 VAR NTS

RECORD DRAWING
THIS RECORD DRAWING HAS BEEN PREPARED FROM THE ORIGINAL CONTRACT DOCUMENTS SIGNED AND SEALED BY THE RESPONSIBLE ENGINEER OF RECORD. ADDITIONAL INFORMATION HAS BEEN PROVIDED BY OTHERS TO REPRESENT AS-CONSTRUCTED CONDITION AND IS SHOWN ON THESE RECORD DRAWINGS. THE RESPONSIBLE ENGINEER OF RECORD CANNOT VERIFY THE ACCURACY OF THE AS-CONSTRUCTED CONDITION INFORMATION REPRESENTED ON THE RECORD DRAWINGS.

0" VERIFY SCALES 1"
BAR IS ONE INCH LONG ON FULL SIZE DRAWING. IF NOT ONE INCH LONG ON THIS DRAWING, ADJUST SCALES ACCORDINGLY

TJC by AMACOR, INC.

Woodard & Curran

REV	DATE	BY	APVD	DESCRIPTION

DESIGNED	RKT
DRAWN	ADM
CHECKED	TJC

SUBMITTED: MARK TAKEMOTO
RMC PROJECT ENGINEER CE-64369

APPROVED: STEVE CLARY
RMC ENGINEER CE-30318

SAUSALITO · MARIN CITY SANITARY DISTRICT

TREATMENT AND WET WEATHER FLOW UPGRADE

STANDARD DETAILS

DWG NO	S-9
SHEET NO	OF 226
PROJ NO	055-006
DATE	JULY 2022

FILENAME: GS Sheets 9-19-22 11:53am BeeVue || XREFS:| X-SMCSD-TBLK |<<--

Last Saved By: BeeVue 9-19-22 11:48am

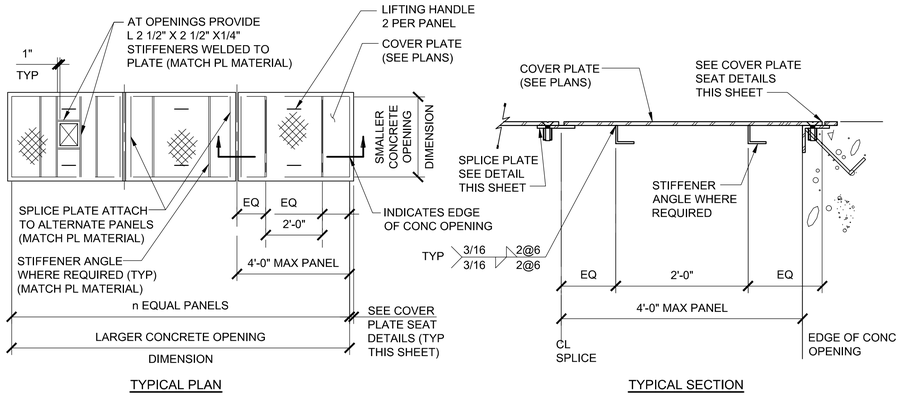

TYPICAL PLAN

TYPICAL SECTION

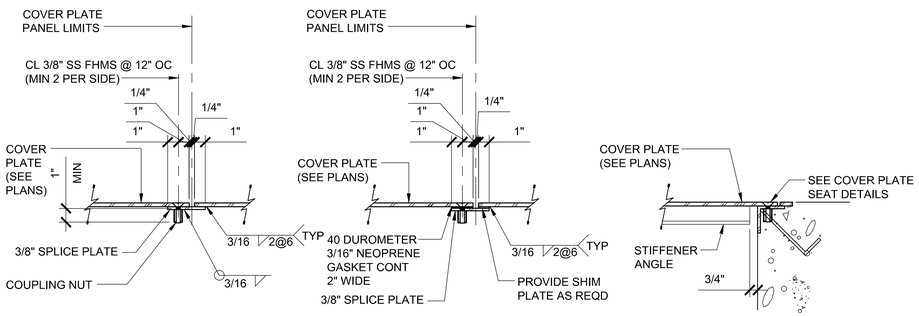

SPLICE PLATE

GASKETED SPLICE PLATE

STIFFENER ANGLE END

NOTE:

1. REFER TO PLANS AND PROJECT SPECIFICATIONS, FOR PLATE THICKNESS AND MATERIAL.

MULTIPLE COVER PLATE

DETAIL 05075 VAR
NTS

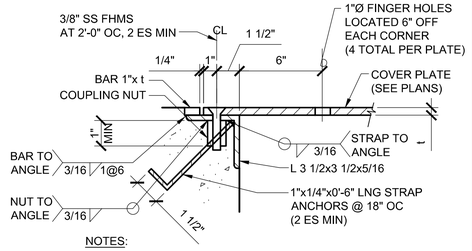

NOTES:

1. REFER TO PLANS AND PROJECT SPECIFICATIONS, FOR PLATE THICKNESS AND MATERIAL.
2. PROVIDE FINGER HOLES FOR COVER PLATES < 4 SQ FT IN SIZE UON.
3. t = 3/8" UON ON DRAWINGS

COVER PLATE SEAT

DETAIL 05076 VAR
NTS

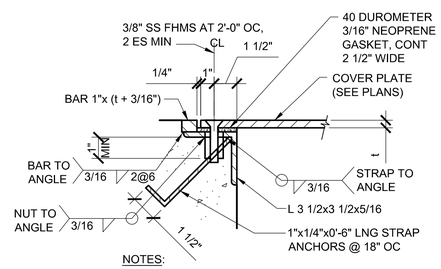

NOTES:

1. REFER TO PLANS AND PROJECT SPECIFICATIONS, FOR PLATE THICKNESS AND MATERIAL.
2. t = 3/8" UON ON DRAWINGS

GASKETED COVER PLATE SEAT

DETAIL 05077 VAR
NTS

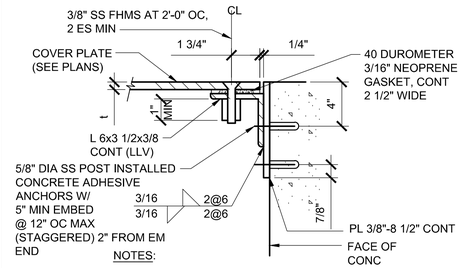

NOTES:

1. REFER TO PLANS AND PROJECT SPECIFICATIONS, FOR PLATE THICKNESS AND MATERIAL.
2. t = 3/8" UON ON DRAWINGS
3. SEE DETAIL 5077, FOR BALANCE OF INFORMATION.

GASKETED COVER PLATE WITH BACKUP PLATE

DETAIL 05078 VAR
NTS

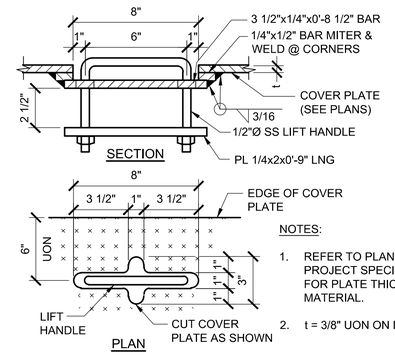

NOTES:

1. REFER TO PLANS AND PROJECT SPECIFICATIONS, FOR PLATE THICKNESS AND MATERIAL.
2. t = 3/8" UON ON DRAWINGS

LIFT HANDLE AT COVER PLATE

DETAIL 05079 VAR
NTS

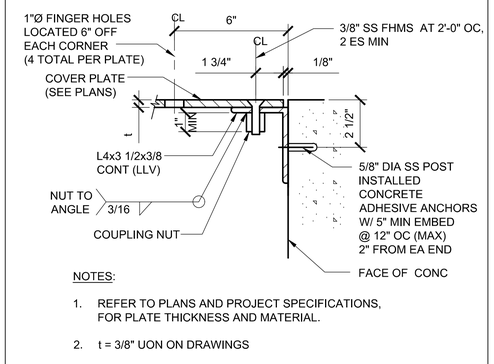

NOTES:

1. REFER TO PLANS AND PROJECT SPECIFICATIONS, FOR PLATE THICKNESS AND MATERIAL.
2. t = 3/8" UON ON DRAWINGS
3. SEE DETAIL 5077, FOR BALANCE OF INFORMATION.

COVER PLATE

DETAIL 05080 VAR
NTS

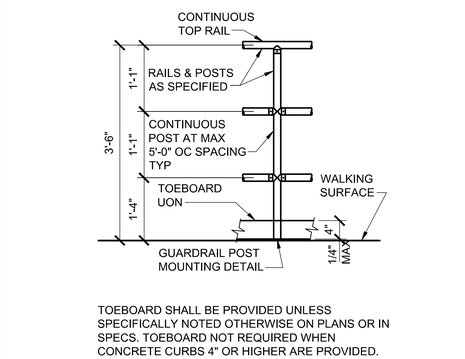

TOEBOARD SHALL BE PROVIDED UNLESS SPECIFICALLY NOTED OTHERWISE ON PLANS OR IN SPECS. TOEBOARD NOT REQUIRED WHEN CONCRETE CURBS 4" OR HIGHER ARE PROVIDED.

TYPICAL GUARDRAIL

DETAIL 05101 VAR
NTS

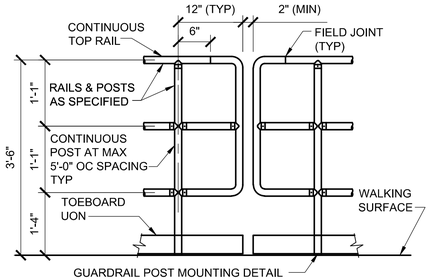

TOEBOARD SHALL BE PROVIDED UNLESS SPECIFICALLY NOTED OTHERWISE ON PLANS OR IN SPECS. TOEBOARD NOT REQUIRED WHEN CONCRETE CURBS 4" OR HIGHER ARE PROVIDED.

TYPICAL GUARDRAIL END POST

DETAIL 05102 VAR
NTS

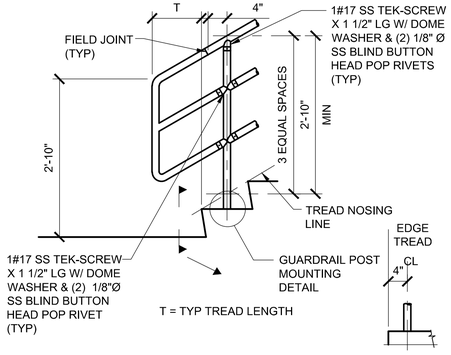

TYPICAL GUARDRAIL END POST AT STAIR

DETAIL 05103 VAR
NTS

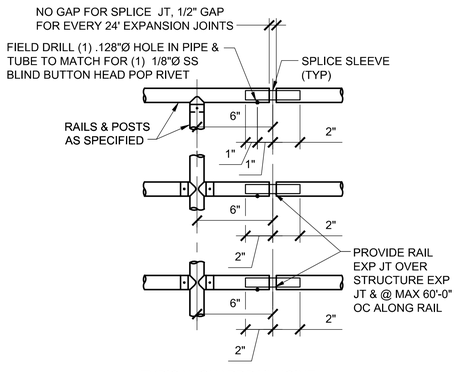

TYPICAL GUARDRAIL JOINT

DETAIL 05105 VAR
NTS

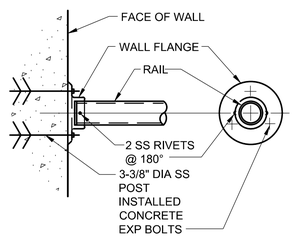

GUARDRAIL OR HANDLE WALL FUTURE

DETAIL 05106 VAR
NTS

RECORD DRAWING
THIS RECORD DRAWING HAS BEEN PREPARED FROM THE ORIGINAL CONTRACT DOCUMENTS SIGNED AND SEALED BY THE RESPONSIBLE ENGINEER OF RECORD. ADDITIONAL INFORMATION HAS BEEN PROVIDED BY OTHERS TO REPRESENT AS-CONSTRUCTED CONDITION AND IS SHOWN ON THESE RECORD DRAWINGS. THE RESPONSIBLE ENGINEER OF RECORD CANNOT VERIFY THE ACCURACY OF THE AS-CONSTRUCTED CONDITION INFORMATION REPRESENTED ON THE RECORD DRAWINGS.

0" 1" VERIFY SCALES BAR IS ONE INCH LONG ON FULL SIZE DRAWING. IF NOT ONE INCH LONG ON THIS DRAWING, ADJUST SCALES ACCORDINGLY

TJC and ASSOCIATES, INC.

Woodard & Curran

REV	DATE	BY	APVD	DESCRIPTION

DESIGNED	RKT
DRAWN	ADM
CHECKED	TJC

SUBMITTED: MARK TAKEMOTO
RMC PROJECT ENGINEER CE-64369

APPROVED: STEVE CLARY
RMC ENGINEER CE-30318

SAUSALITO · MARIN CITY SANITARY DISTRICT

TREATMENT AND WET WEATHER FLOW UPGRADE

STANDARD DETAILS

DWG NO	S-10
SHEET NO	OF 226
PROJ NO	055-006
DATE	JULY 2022

FILENAME: GS Sheets 9-19-22 11:53am BeeVue || XREFS:| X-SMCSD-TBLK |<--

Last Saved By: BeeVue 9-19-22 11:48am

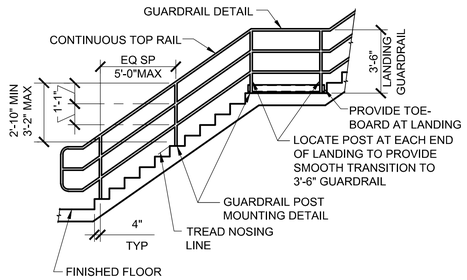

NOTE: ALL DIMENSIONS ARE TO CL OF POST OR RAIL

STAIR GUARDRAIL

DETAIL 05108 VAR

NTS

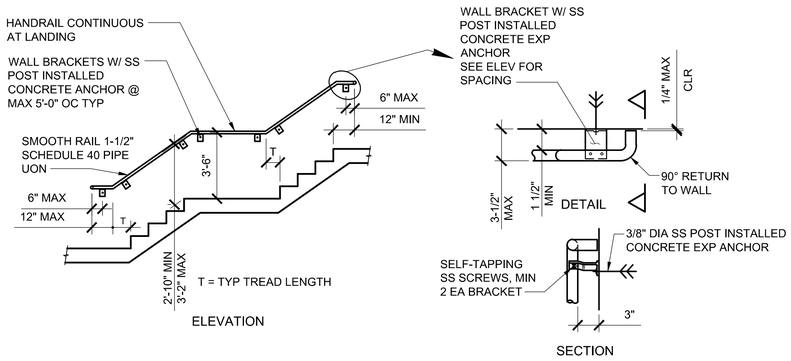

STAIR HANDRAIL

DETAIL 05110 VAR

NTS

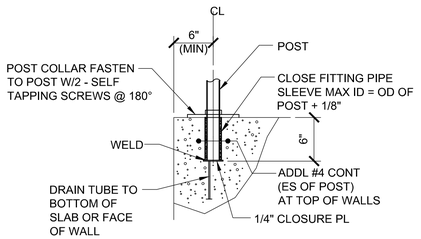

REMOVABLE GUARDRAIL BASE

DETAIL 05111 VAR

NTS

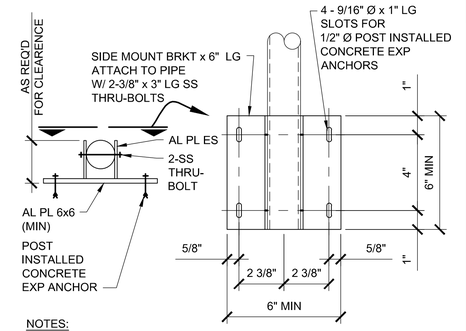

NOTES:

1. SIZE OF PLATES, BOLTS AND ANCHORS AS REQUIRE TO MEET LOADING REQUIREMENTS.
2. ALUMINUM IN CONTACT WITH CONCRETE SHALL BE COATED WITH A BITUMINOUS OR SIMILAR COATING

STEEL SIDE MOUNT 4 - HOLES

DETAIL 05112 VAR

NTS

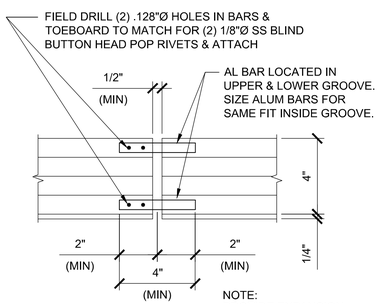

TOEBOARD EXPANSION JOINT

DETAIL 05113 VAR

NTS

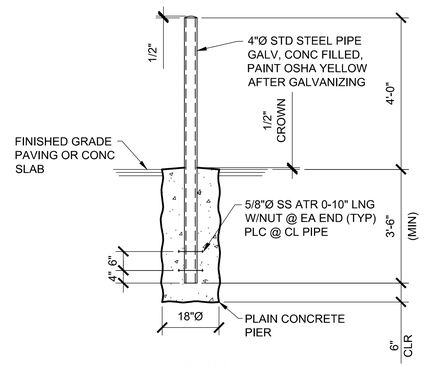

BOLLARD

DETAIL 05129 VAR

NTS

RECORD DRAWING
THIS RECORD DRAWING HAS BEEN PREPARED FROM THE ORIGINAL CONTRACT DOCUMENTS SIGNED AND SEALED BY THE RESPONSIBLE ENGINEER OF RECORD. ADDITIONAL INFORMATION HAS BEEN PROVIDED BY OTHERS TO REPRESENT AS-CONSTRUCTED CONDITION AND IS SHOWN ON THESE RECORD DRAWINGS. THE RESPONSIBLE ENGINEER OF RECORD CANNOT VERIFY THE ACCURACY OF THE AS-CONSTRUCTED CONDITION INFORMATION REPRESENTED ON THE RECORD DRAWINGS.

0" 1" VERIFY SCALES
BAR IS ONE INCH
LONG ON FULL
SIZE DRAWING.
IF NOT ONE INCH
LONG ON THIS
DRAWING, ADJUST
SCALES ACCORDINGLY

TJC and ASSOCIATES, INC.

Woodard & Curran

REV	DATE	BY	APVD	DESCRIPTION
1				
2				
3				
4				
5				

DESIGNED	RKT
DRAWN	ADM
CHECKED	TJC

SUBMITTED: MARK TAKEMOTO
RMC PROJECT ENGINEER CE-64369

APPROVED: STEVE CLARY
RMC ENGINEER CE-30318

SAUSALITO · MARIN CITY SANITARY DISTRICT

TREATMENT AND WET WEATHER FLOW UPGRADE

STANDARD DETAILS

DWG NO	S-11
SHEET NO	OF 226
PROJ NO	055-006
DATE	JULY 2022

FILENAME: GS Sheets 9-19-22 11:54am BeeVue || XREFS:| X-SMCSD-TBLK |<<--

Last Saved By: BeeVue 9-19-22 11:48am

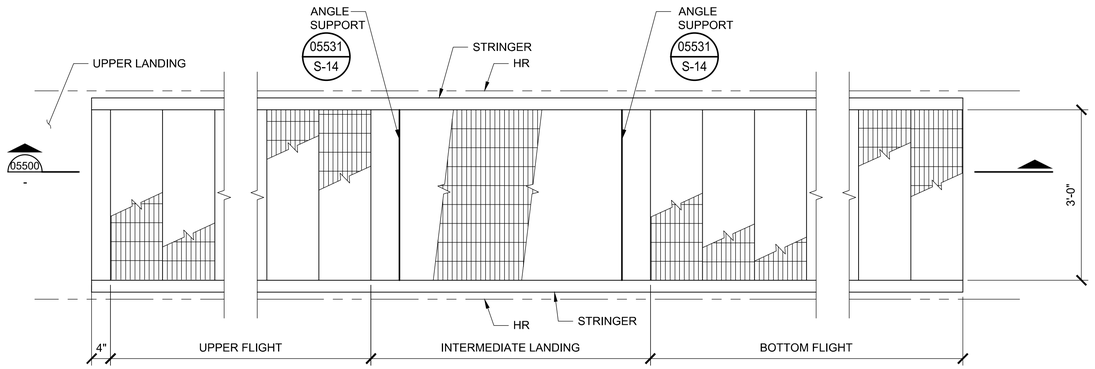

PLAN

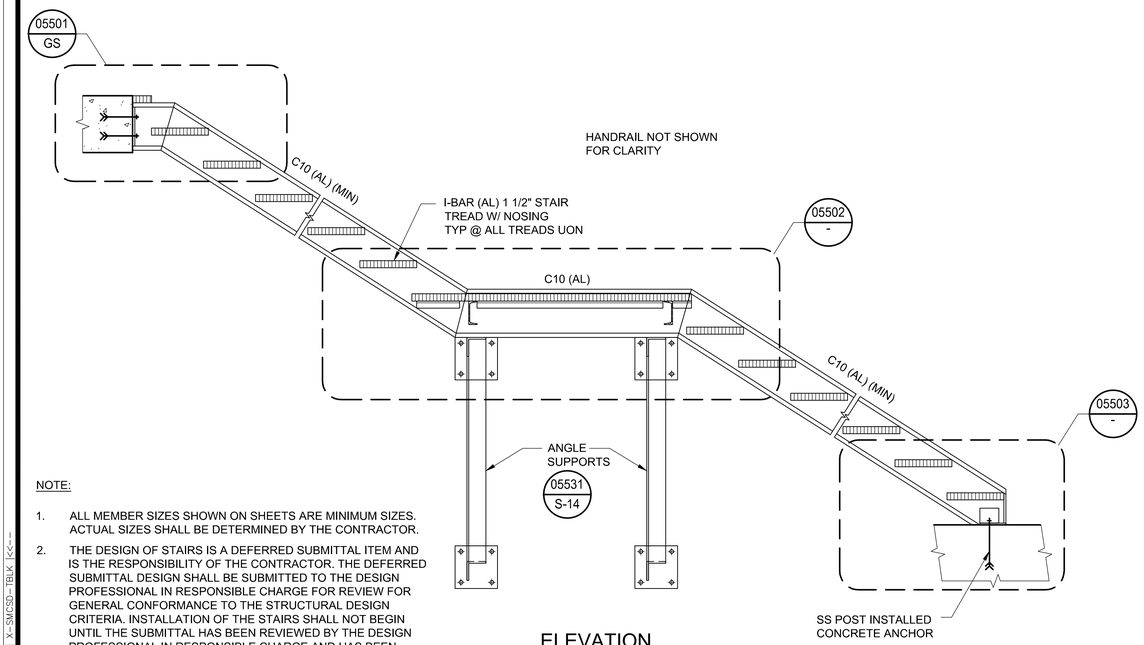

ELEVATION

TYPICAL STAIR

DETAIL 05500 VAR

NTS

NOTE:

1. ALL MEMBER SIZES SHOWN ON SHEETS ARE MINIMUM SIZES. ACTUAL SIZES SHALL BE DETERMINED BY THE CONTRACTOR.
2. THE DESIGN OF STAIRS IS A DEFERRED SUBMITTAL ITEM AND IS THE RESPONSIBILITY OF THE CONTRACTOR. THE DEFERRED SUBMITTAL DESIGN SHALL BE SUBMITTED TO THE DESIGN PROFESSIONAL IN RESPONSIBLE CHARGE FOR REVIEW FOR GENERAL CONFORMANCE TO THE STRUCTURAL DESIGN CRITERIA. INSTALLATION OF THE STAIRS SHALL NOT BEGIN UNTIL THE SUBMITTAL HAS BEEN REVIEWED BY THE DESIGN PROFESSIONAL IN RESPONSIBLE CHARGE AND HAS BEEN FOUND TO BE IN GENERAL CONFORMANCE WITH THE DESIGN OF THE PROJECT AND THE SUBMITTAL HAS BEEN DEEMED ACCEPTABLE BY THE OWNER.
3. ALL MATERIALS FOR STAIRS SHALL BE ALUMINUM UON.
4. WIDTH OF STAIR SHOWN ON DRAWINGS IS THE DISTANCE BETWEEN STRINGERS.

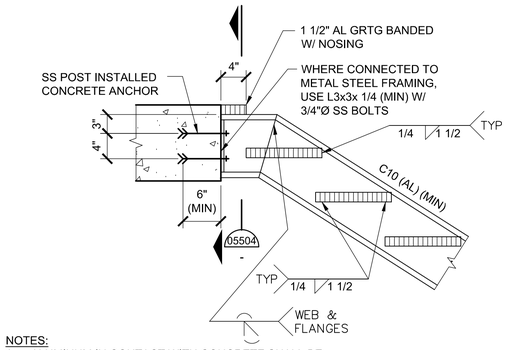

NOTES:
1. ALUMINUM IN CONTACT WITH CONCRETE SHALL BE COATED WITH A BITUMINOUS OR SIMILAR COATING

UPPER CONNECTION AT CONCRETE

DETAIL 05501 VAR

NTS

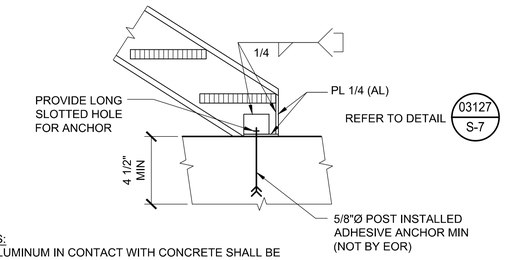

NOTES:
1. ALUMINUM IN CONTACT WITH CONCRETE SHALL BE COATED WITH A BITUMINOUS OR SIMILAR COATING

BOTTOM ANCHOR AT CONCRETE

DETAIL 05503 VAR

NTS

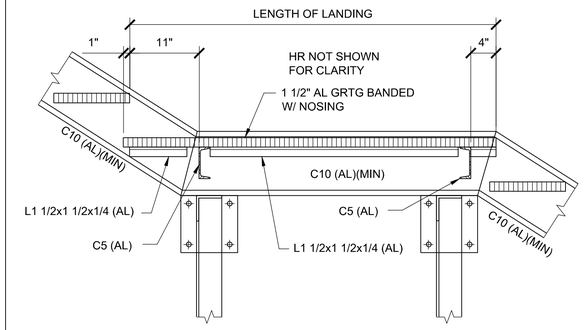

INTERMEDIATE LANDING

DETAIL 05502 VAR

NTS

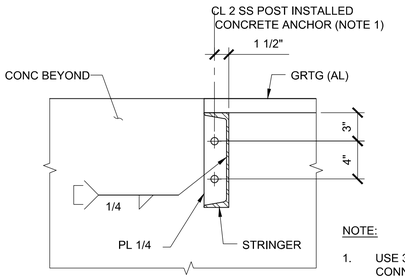

NOTE:
1. USE 3/4" SS MB AT CONNECTION TO METAL FRAMING.

NOTES:
1. ALUMINUM IN CONTACT WITH CONCRETE SHALL BE COATED WITH A BITUMINOUS OR SIMILAR COATING

DETAIL 05504 VAR

NTS

FILENAME: GS Sheets 9-19-22 11:54am BeeVue || XREFS:| X-SMCSD-TBLK |<<--

RECORD DRAWING
THIS RECORD DRAWING HAS BEEN PREPARED FROM THE ORIGINAL CONTRACT DOCUMENTS SIGNED AND SEALED BY THE RESPONSIBLE ENGINEER OF RECORD. ADDITIONAL INFORMATION HAS BEEN PROVIDED BY OTHERS TO REPRESENT AS-CONSTRUCTED CONDITION AND IS SHOWN ON THESE RECORD DRAWINGS. THE RESPONSIBLE ENGINEER OF RECORD CANNOT VERIFY THE ACCURACY OF THE AS-CONSTRUCTED CONDITION INFORMATION REPRESENTED ON THE RECORD DRAWINGS.

0" 1" VERIFY SCALES BAR IS ONE INCH LONG ON FULL SIZE DRAWING. IF NOT ONE INCH LONG ON THIS DRAWING, ADJUST SCALES ACCORDINGLY

TJC and ASSOCIATES, INC.

Woodard & Curran

REV	DATE	BY	APVD	DESCRIPTION

DESIGNED	RKT
DRAWN	ADM
CHECKED	TJC

SUBMITTED: MARK TAKEMOTO, RMC PROJECT ENGINEER CE-64369

APPROVED: STEVE CLARY, RMC ENGINEER CE-30318

SAUSALITO · MARIN CITY SANITARY DISTRICT

TREATMENT AND WET WEATHER FLOW UPGRADE

STANDARD DETAILS

DWG NO	S-12
SHEET NO	OF 226
PROJ NO	055-006
DATE	JULY 2022

Last Saved By: BeeVue 9-19-22 11:48am

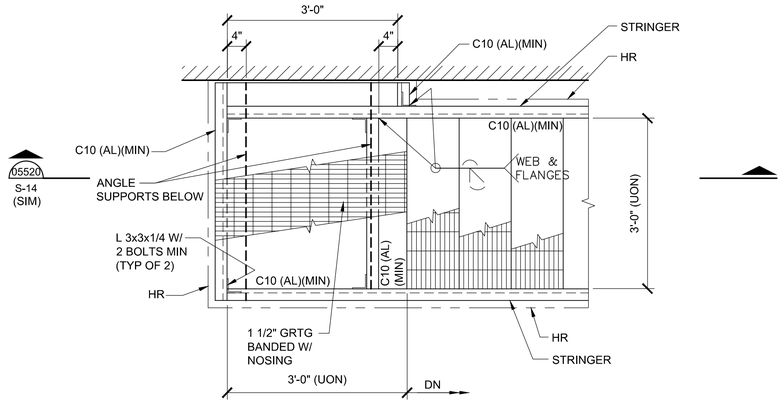

TOP LANDING AT STAIRS

DETAIL 05510 / NTS VAR

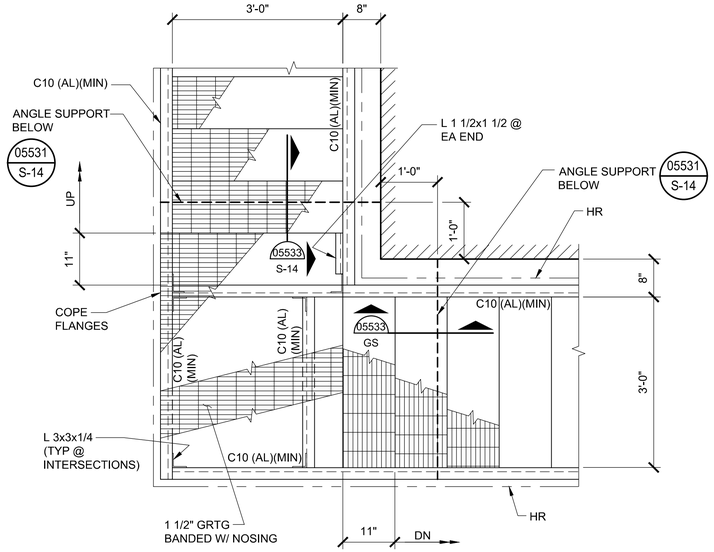

NOTE:

1. EXTERIOR CORNER SHOWN. INTERIOR CORNER SIMILAR.

PLAN AT CORNER

DETAIL 05513 / NTS VAR

RECORD DRAWING
THIS RECORD DRAWING HAS BEEN PREPARED FROM THE ORIGINAL CONTRACT DOCUMENTS SIGNED AND SEALED BY THE RESPONSIBLE ENGINEER OF RECORD. ADDITIONAL INFORMATION HAS BEEN PROVIDED BY OTHERS TO REPRESENT AS-CONSTRUCTED CONDITION AND IS SHOWN ON THESE RECORD DRAWINGS. THE RESPONSIBLE ENGINEER OF RECORD CANNOT VERIFY THE ACCURACY OF THE AS-CONSTRUCTED CONDITION INFORMATION REPRESENTED ON THE RECORD DRAWINGS.

0" — 1"
VERIFY SCALES
BAR IS ONE INCH
LONG ON FULL
SIZE DRAWING.
IF NOT ONE INCH
LONG ON THIS
DRAWING, ADJUST
SCALES ACCORDINGLY

TJC and ASSOCIATES, INC.

Woodard & Curran

REV	DATE	BY	APVD	DESCRIPTION
1				
2				
3				
4				
5				

DESIGNED	RKT
DRAWN	ADM
CHECKED	TJC

SUBMITTED: MARK TAKEMOTO
RMC PROJECT ENGINEER CE-64369

APPROVED: STEVE CLARY
RMC ENGINEER CE-30318

SAUSALITO · MARIN CITY SANITARY DISTRICT

TREATMENT AND WET WEATHER FLOW UPGRADE

STANDARD DETAILS

DWG NO	S-13
SHEET NO	OF 226
PROJ NO	055-006
DATE	JULY 2022

FILENAME: GS Sheets 9-19-22 11:54am BeeVue || XREFS:| X-SMCSD-TBLK |<<--

Last Saved By: BeeVue 9-19-22 11:48am

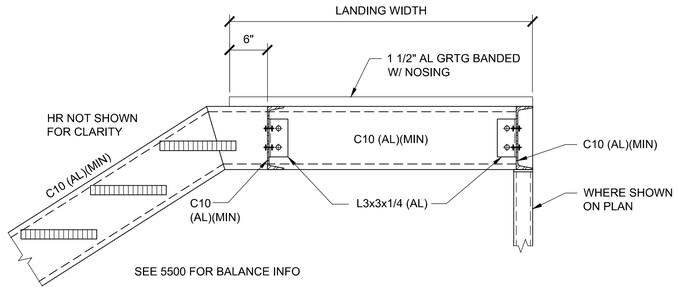

TRANSITION FROM LANDING TO "DOWN" FLIGHT

DETAIL NTS 05520 VAR

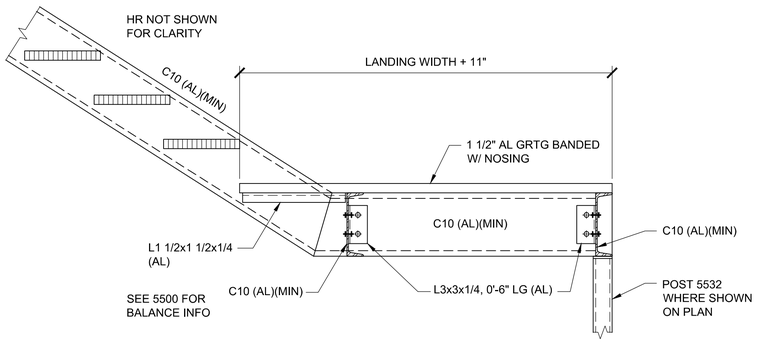

TRANSITION FROM LANDING TO "UP" FLIGHT

DETAIL NTS 05521 VAR

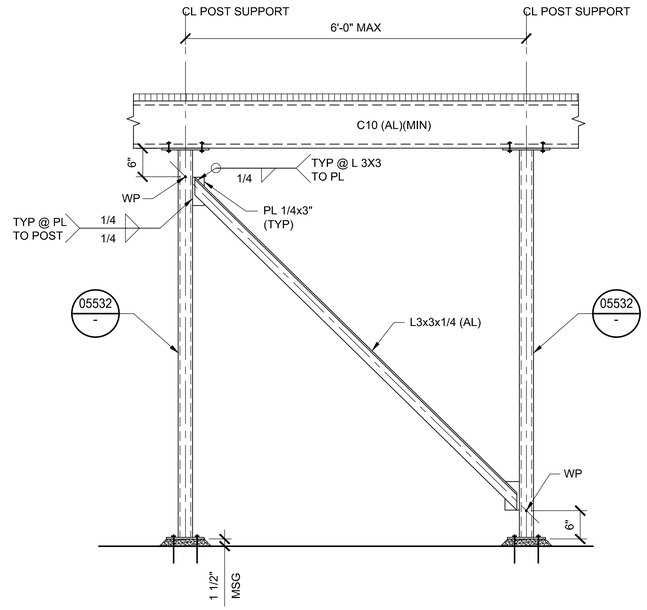

POST SUPPORT AT INTERMEDIATE LANDING

DETAIL NTS 05530 VAR

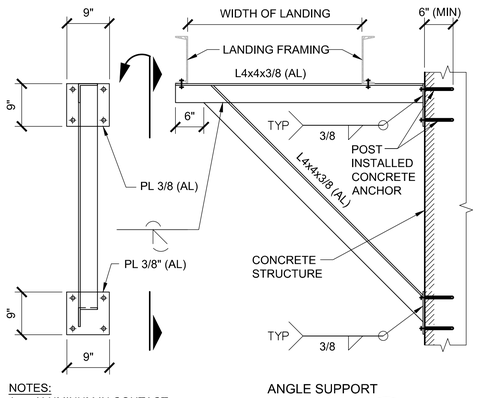

NOTES:
1. ALUMINUM IN CONTACT WITH CONCRETE SHALL BE COATED WITH A BITUMINOUS OR SIMILAR COATING

ANGLE SUPPORT

DETAIL NTS 05531 VAR

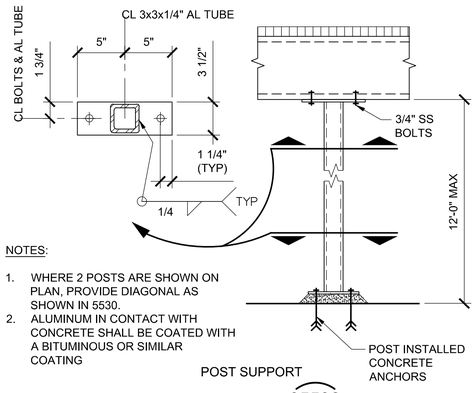

NOTES:
1. WHERE 2 POSTS ARE SHOWN ON PLAN, PROVIDE DIAGONAL AS SHOWN IN 5530.
2. ALUMINUM IN CONTACT WITH CONCRETE SHALL BE COATED WITH A BITUMINOUS OR SIMILAR COATING

POST SUPPORT

DETAIL NTS 05532 VAR

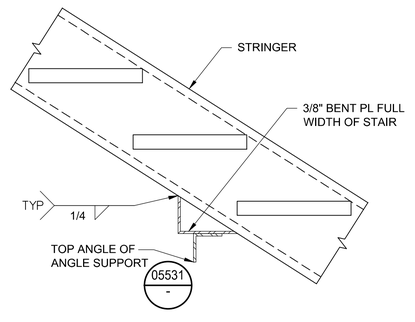

SUPPORT AT SLOPED STRINGER

DETAIL NTS 05533 VAR

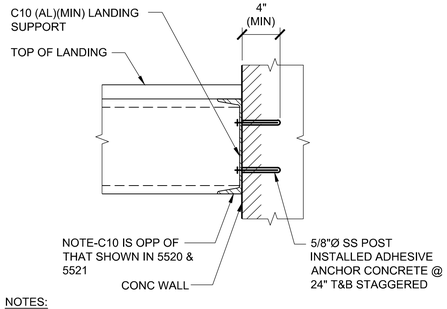

NOTES:
1. ALUMINUM IN CONTACT WITH CONCRETE SHALL BE COATED WITH A BITUMINOUS OR SIMILAR COATING

INTERMEDIATE LANDING SUPPORT AT CONCRETE WALL

DETAIL NTS 05534 VAR

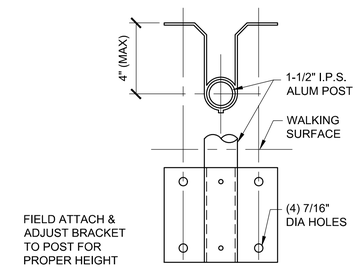

NOTES:
1. ALUMINUM IN CONTACT WITH CONCRETE SHALL BE COATED WITH A BITUMINOUS OR SIMILAR COATING

SIDE MOUNT BRACKET

DETAIL NTS 05535 VAR

RECORD DRAWING
THIS RECORD DRAWING HAS BEEN PREPARED FROM THE ORIGINAL CONTRACT DOCUMENTS SIGNED AND SEALED BY THE RESPONSIBLE ENGINEER OF RECORD. ADDITIONAL INFORMATION HAS BEEN PROVIDED BY OTHERS TO REPRESENT AS-CONSTRUCTED CONDITION AND IS SHOWN ON THESE RECORD DRAWINGS. THE RESPONSIBLE ENGINEER OF RECORD CANNOT VERIFY THE ACCURACY OF THE AS-CONSTRUCTED CONDITION INFORMATION REPRESENTED ON THE RECORD DRAWINGS.

0" 1" VERIFY SCALES BAR IS ONE INCH LONG ON FULL SIZE DRAWING. IF NOT ONE INCH LONG ON THIS DRAWING, ADJUST SCALES ACCORDINGLY

TJC and ASSOCIATES, INC.

Woodard & Curran

REV	DATE	BY	APVD	DESCRIPTION

DESIGNED	RKT
DRAWN	ADM
CHECKED	TJC

SUBMITTED: MARK TAKEMOTO, RMC PROJECT ENGINEER CE-64369

APPROVED: STEVE CLARY, RMC ENGINEER CE-30318

SAUSALITO • MARIN CITY SANITARY DISTRICT

TREATMENT AND WET WEATHER FLOW UPGRADE

STANDARD DETAILS

DWG NO	S-14
SHEET NO	OF 226
PROJ NO	055-006
DATE	JULY 2022

FILENAME: GS Sheets 9-19-22 11:54am BeeVue || XREFS:| X-SMCSD-TBLK |<<--

Last Saved By: BeeVue 9-19-22 11:48am

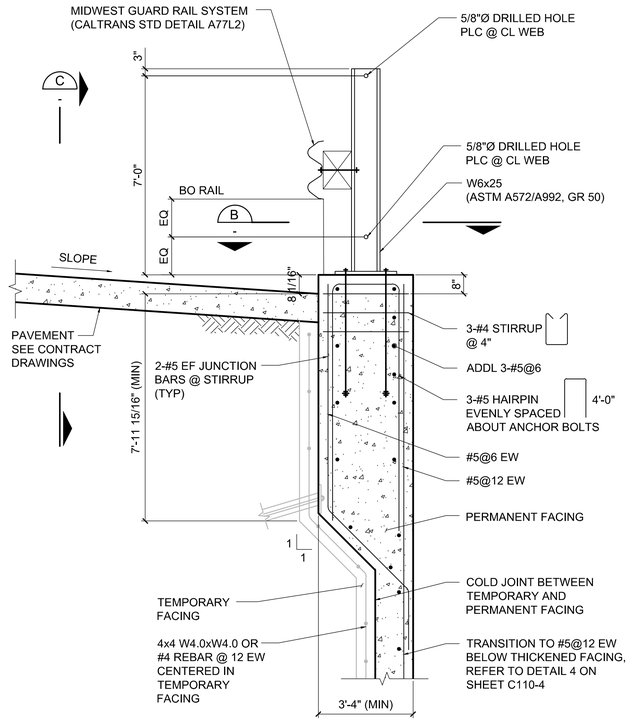

SECTION A
SCALE: 3/8"=1'-0"

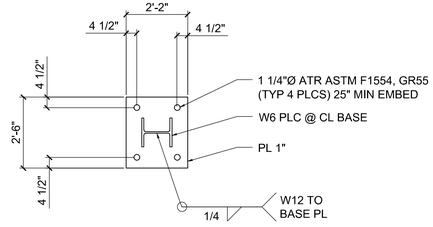

SECTION B
SCALE: 3/8"=1'-0"

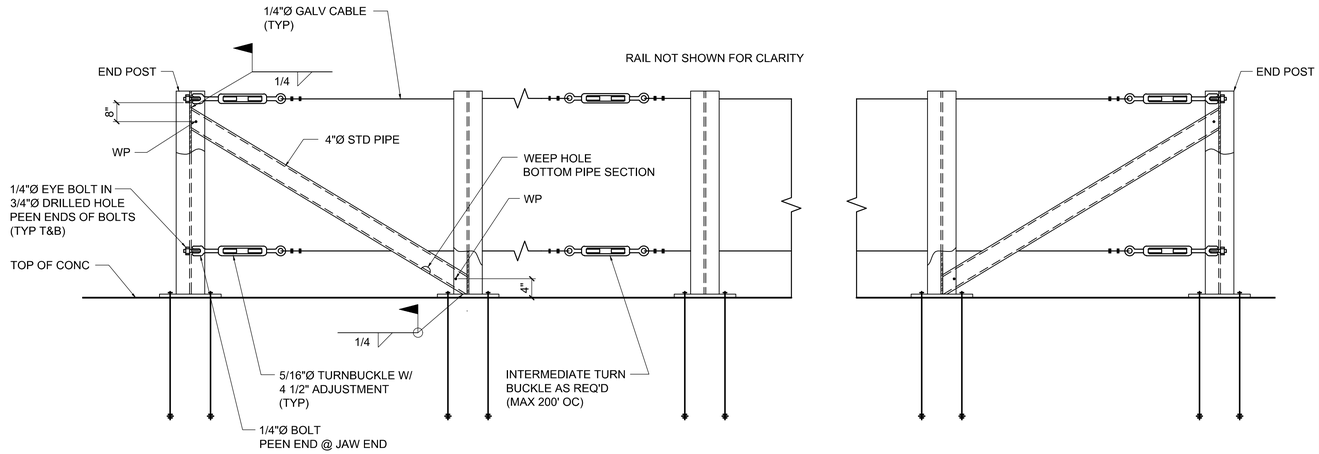

SECTION C
SCALE: NTS

NOTES:

1. SEE CONTRACT DOCUMENTS FOR SOIL NAIL WALL INFORMATION.
2. PAINTING AND COATINGS:

   SHOP COAT - ALL METAL FABRICATIONS SHALL RECEIVE A SHOP COAT OF RUST INHIBITIVE PAINT MEETING FEDERAL SPECIFICATIONS TT-P-86.

   a. PRIME COAT - RUST INHIBITIVE, TWO COMPONENT EPOXY COATING WITH A MINIMUM SOLIDS CONTENT OF 68 PERCENT BY VOLUME. DFT - 4 mils.

   b. TOP COAT - ALIPHATIC ACRYLIC POLYURETHANE COATING MATERIAL. DFT = 2 mils.

   c. MORE THAN ONE FINISH COAT SHALL BE APPLIED TO PRODUCE A FINISH WITH UNIFORM TEXTURE.

   d. WHEN APPLYING TOP COAT TO METAL IN THE FIELD, REMOVE OIL, GREASE, DIRT LOOSE MILL SCALE, AND OTHER FOREIGN SUBSTANCES. USE SOLVENT OR MECHANICAL CLEANING METHODS THAT COMPLY WITH THE STEEL STRUCTURES PAINTING COUNCIL'S (SSPC) RECOMMENDATIONS.

RECORD DRAWING
THIS RECORD DRAWING HAS BEEN PREPARED FROM THE ORIGINAL CONTRACT DOCUMENTS SIGNED AND SEALED BY THE RESPONSIBLE ENGINEER OF RECORD. ADDITIONAL INFORMATION HAS BEEN PROVIDED BY OTHERS TO REPRESENT AS-CONSTRUCTED CONDITION AND IS SHOWN ON THESE RECORD DRAWINGS. THE RESPONSIBLE ENGINEER OF RECORD CANNOT VERIFY THE ACCURACY OF THE AS-CONSTRUCTED CONDITION INFORMATION REPRESENTED ON THE RECORD DRAWINGS.

0" 1" VERIFY SCALES
BAR IS ONE INCH
LONG ON FULL
SIZE DRAWING.
IF NOT ONE INCH
LONG ON THIS
DRAWING, ADJUST
SCALES ACCORDINGLY

TJC and ASSOCIATES, Inc.

Woodard & Curran

REV	DATE	BY	APVD	DESCRIPTION

DESIGNED	RKT
DRAWN	ADM
CHECKED	TJC

SUBMITTED: MARK TAKEMOTO
RMC PROJECT ENGINEER CE-64369

APPROVED: STEVE CLARY
RMC ENGINEER CE-30318

SAUSALITO · MARIN CITY SANITARY DISTRICT

TREATMENT AND WET WEATHER FLOW UPGRADE

ROADWAY TRAFFIC BARRIER SECTIONS

DWG NO	S-15
SHEET NO	OF 226
PROJ NO	055-006
DATE	JULY 2022

FILENAME: GS Sheets 9-19-22 11:55am BeeVue || XREFS:| X-SMCSD-TBLK |<<--

Last Saved By: BeeVue 9-19-22 11:48am

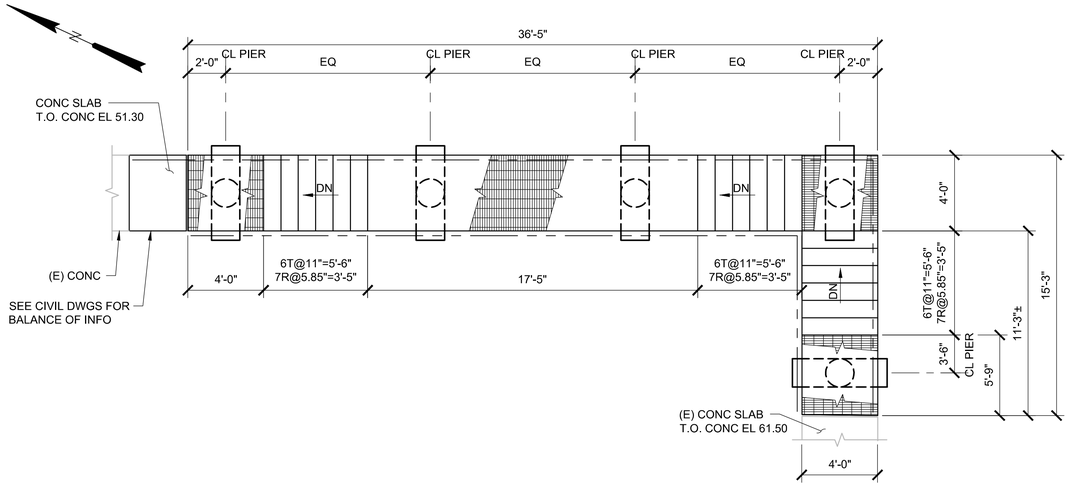

STAIR PLAN

SCALE: 1/4"=1'-0"

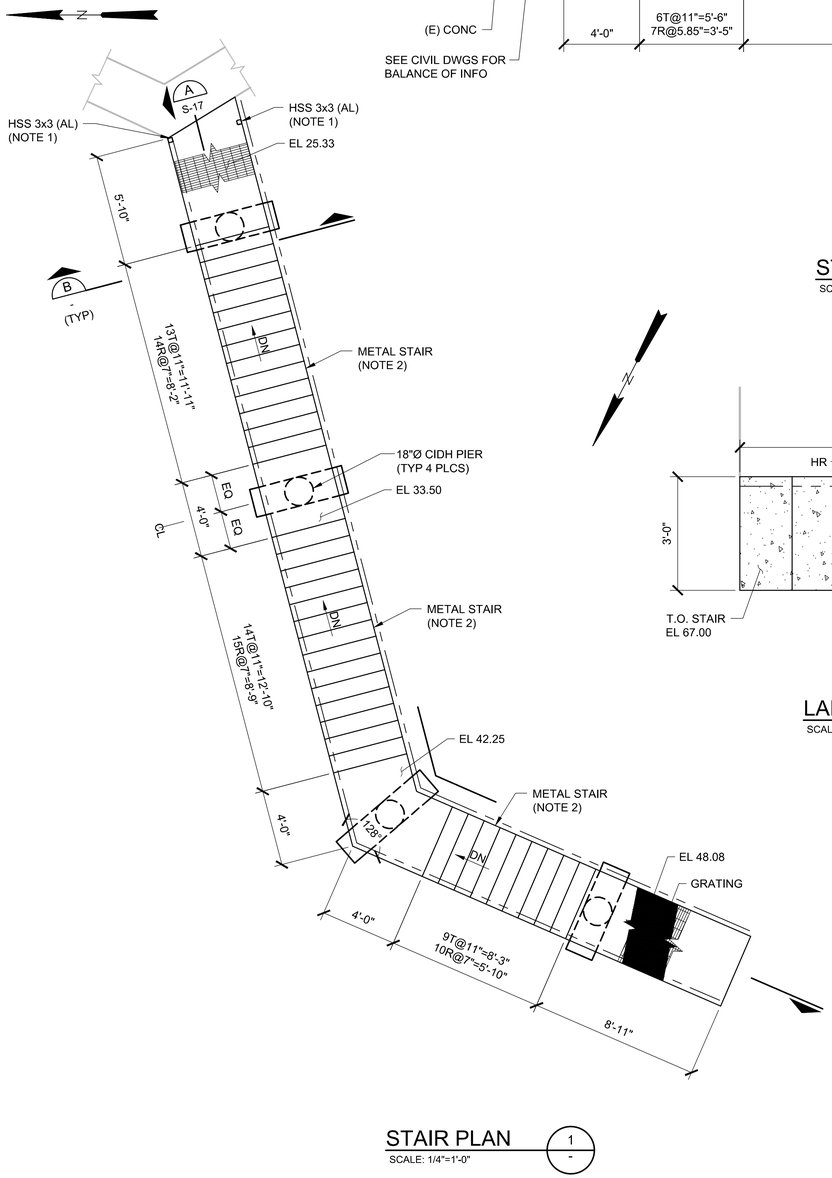

STAIR PLAN

SCALE: 1/4"=1'-0"

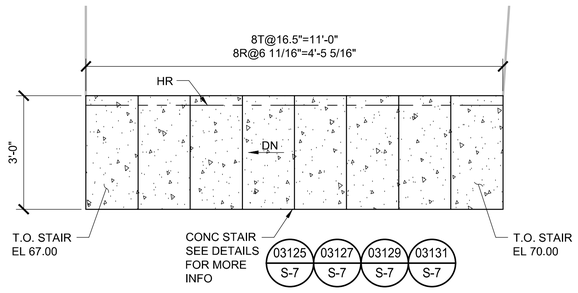

LANDSCAPE STAIR PLAN

SCALE: 3/4"=1'-0"

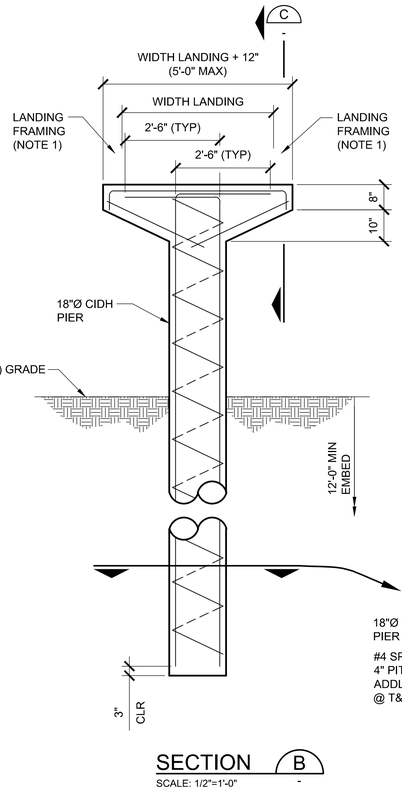

SECTION B

SCALE: 1/2"=1'-0"

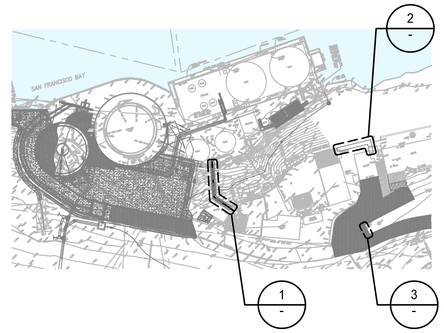

STAIR KEY PLAN

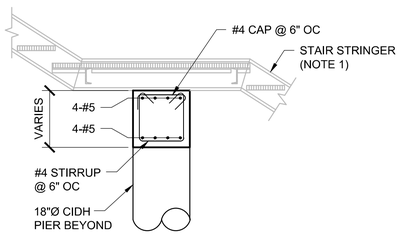

SECTION C

SCALE: 1/2"=1'-0"

NOTE:

1. MEMBER SIZES SHOWN ON SHEETS ARE MINIMUM SIZES. ACTUAL SIZES SHALL BE DETERMINED BY THE CONTRACTOR.
2. THE DESIGN OF STAIRS IS A DEFERRED SUBMITTAL ITEM AND IS THE RESPONSIBILITY OF THE CONTRACTOR. THE DEFERRED SUBMITTAL DESIGN SHALL BE SUBMITTED TO THE DESIGN PROFESSIONAL IN RESPONSIBLE CHARGE FOR REVIEW FOR GENERAL CONFORMANCE TO THE STRUCTURAL DESIGN CRITERIA. INSTALLATION OF THE STAIRS SHALL NOT BEGIN UNTIL THE SUBMITTAL HAS BEEN REVIEWED BY THE DESIGN PROFESSIONAL IN RESPONSIBLE CHARGE AND HAS BEEN FOUND TO BE IN GENERAL CONFORMANCE WITH THE DESIGN OF THE PROJECT AND THE SUBMITTAL HAS BEEN DEEMED ACCEPTABLE BY THE OWNER.
3. ALL MATERIALS FOR STAIRS SHALL BE ALUMINUM UON.
4. WIDTH OF STAIR SHOWN ON DRAWINGS IS THE DISTANCE BETWEEN STRINGERS.

RECORD DRAWING
THIS RECORD DRAWING HAS BEEN PREPARED FROM THE ORIGINAL CONTRACT DOCUMENTS SIGNED AND SEALED BY THE RESPONSIBLE ENGINEER OF RECORD. ADDITIONAL INFORMATION HAS BEEN PROVIDED BY OTHERS TO REPRESENT AS-CONSTRUCTED CONDITION AND IS SHOWN ON THESE RECORD DRAWINGS. THE RESPONSIBLE ENGINEER OF RECORD CANNOT VERIFY THE ACCURACY OF THE AS-CONSTRUCTED CONDITION INFORMATION REPRESENTED ON THE RECORD DRAWINGS.

0" 1" VERIFY SCALES
BAR IS ONE INCH
LONG ON FULL
SIZE DRAWING.
IF NOT ONE INCH
LONG ON THIS
DRAWING, ADJUST
SCALES ACCORDINGLY

TJC and ASSOCIATES, INC.

Woodard & Curran

REV	DATE	BY	APVD	DESCRIPTION

DESIGNED	RKT
DRAWN	ADM
CHECKED	TJC

SUBMITTED: MARK TAKEMOTO
RMC PROJECT ENGINEER CE-64369

APPROVED: STEVE CLARY
RMC ENGINEER CE-30318

SAUSALITO · MARIN CITY SANITARY DISTRICT

TREATMENT AND WET WEATHER FLOW UPGRADE

MISCELLANEOUS STAIRS

DWG NO	S-16
SHEET NO	OF 226
PROJ NO	055-006
DATE	JULY 2022

FILENAME: 0055-006-S16 9-19-22 11:57am BeeVue || XREFS:| X-SMCSD-TBLK | S-HEADWORKS-PLAN | X-SitePlan | X-Treatment Plant site plan | X-Topo Survey new | X-Site | X-Topo Survey new | S-HEADWORKS-SECT |<<--

Last Saved By: BeeVue 9-19-22 11:56am

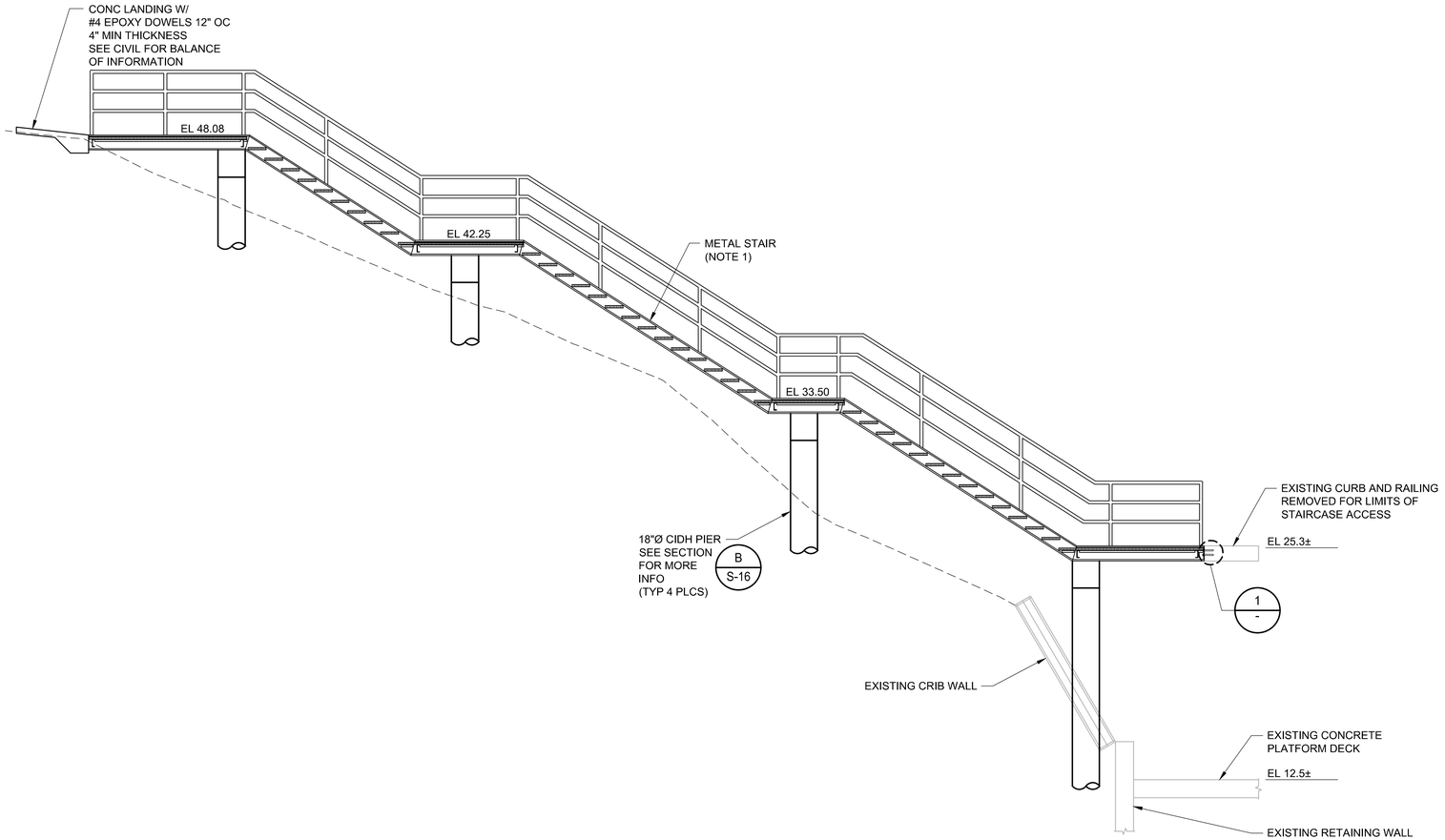

SECTION A

SCALE: 1/4"=1'-0" S-16

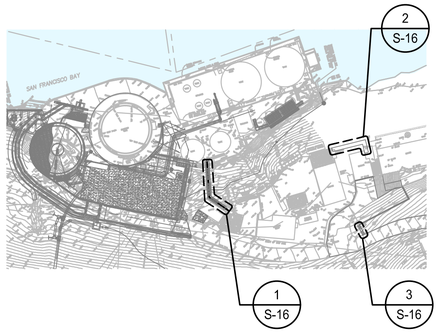

STAIR KEY PLAN

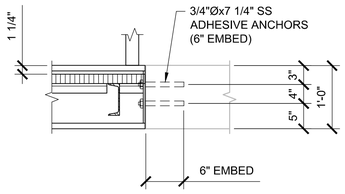

DETAIL 1

SCALE: NTS -

NOTE:

1. MEMBER SIZES SHOWN ON SHEETS ARE MINIMUM SIZES. ACTUAL SIZES SHALL BE DETERMINED BY THE CONTRACTOR.
2. THE DESIGN OF STAIRS IS A DEFERRED SUBMITTAL ITEM AND IS THE RESPONSIBILITY OF THE CONTRACTOR. THE DEFERRED SUBMITTAL DESIGN SHALL BE SUBMITTED TO THE DESIGN PROFESSIONAL IN RESPONSIBLE CHARGE FOR REVIEW FOR GENERAL CONFORMANCE TO THE STRUCTURAL DESIGN CRITERIA. INSTALLATION OF THE STAIRS SHALL NOT BEGIN UNTIL THE SUBMITTAL HAS BEEN REVIEWED BY THE DESIGN PROFESSIONAL IN RESPONSIBLE CHARGE AND HAS BEEN FOUND TO BE IN GENERAL CONFORMANCE WITH THE DESIGN OF THE PROJECT AND THE SUBMITTAL HAS BEEN DEEMED ACCEPTABLE BY THE OWNER.
3. ALL MATERIALS FOR STAIRS SHALL BE ALUMINUM UON.
4. WIDTH OF STAIR SHOWN ON DRAWINGS IS THE DISTANCE BETWEEN STRINGERS.

RECORD DRAWING
THIS RECORD DRAWING HAS BEEN PREPARED FROM THE ORIGINAL CONTRACT DOCUMENTS SIGNED AND SEALED BY THE RESPONSIBLE ENGINEER OF RECORD. ADDITIONAL INFORMATION HAS BEEN PROVIDED BY OTHERS TO REPRESENT AS-CONSTRUCTED CONDITION AND IS SHOWN ON THESE RECORD DRAWINGS. THE RESPONSIBLE ENGINEER OF RECORD CANNOT VERIFY THE ACCURACY OF THE AS-CONSTRUCTED CONDITION INFORMATION REPRESENTED ON THE RECORD DRAWINGS.

0" 1" VERIFY SCALES
BAR IS ONE INCH
LONG ON FULL
SIZE DRAWING.
IF NOT ONE INCH
LONG ON THIS
DRAWING, ADJUST
SCALES ACCORDINGLY

TJC and ASSOCIATES, INC.

Woodard & Curran

REV	DATE	BY	APVD	DESCRIPTION

DESIGNED	RKT
DRAWN	ADM
CHECKED	TJC

SUBMITTED: MARK TAKEMOTO
RMC PROJECT ENGINEER CE-64369

APPROVED: STEVE CLARY
RMC ENGINEER CE-30318

SAUSALITO · MARIN CITY SANITARY DISTRICT

TREATMENT AND WET WEATHER FLOW UPGRADE

STAIR SECTIONS

DWG NO	S-17
SHEET NO	OF 226
PROJ NO	055-006
DATE	JULY 2022

FILENAME: 0055-006-S17 9-19-22 11:57am BeeVue || XREFS:| X-SMCSD-TBLK | S-HEADWORKS-SECT | X-Site | X-Topo Survey |<<--
Last Saved By: BeeVue 9-19-22 11:57am

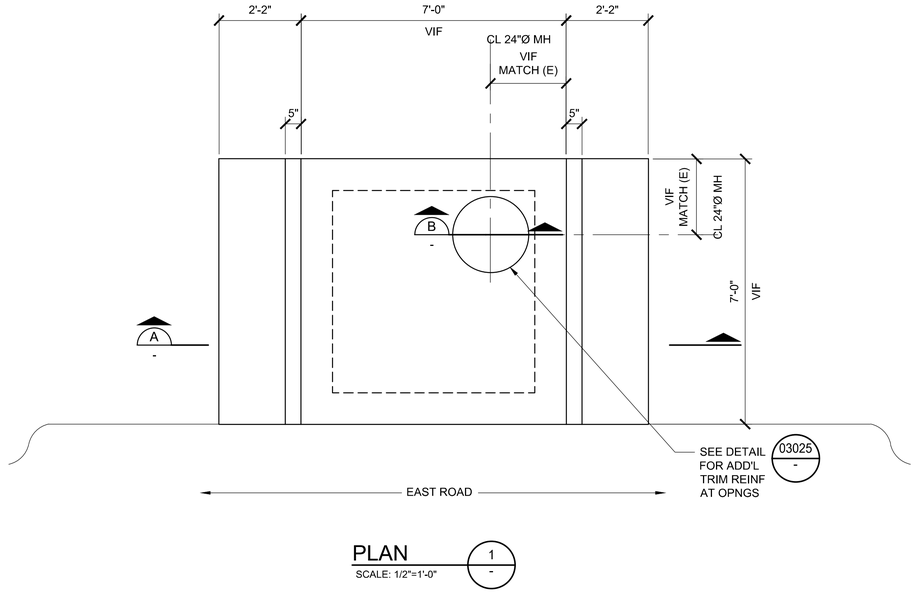

PLAN 1/- SCALE: 1/2"=1'-0"

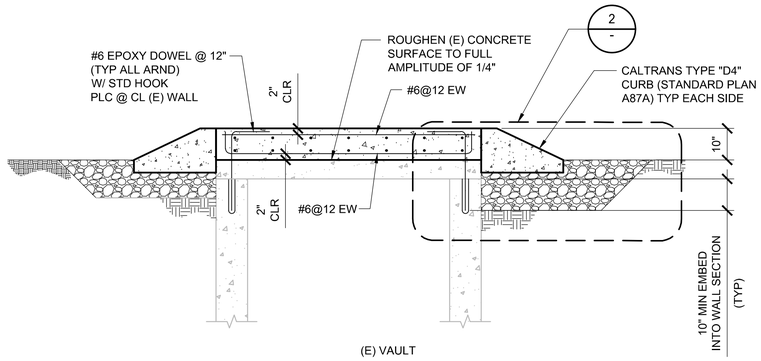

SECTION A - SCALE:1/2"=1'-0"



KEY PLAN

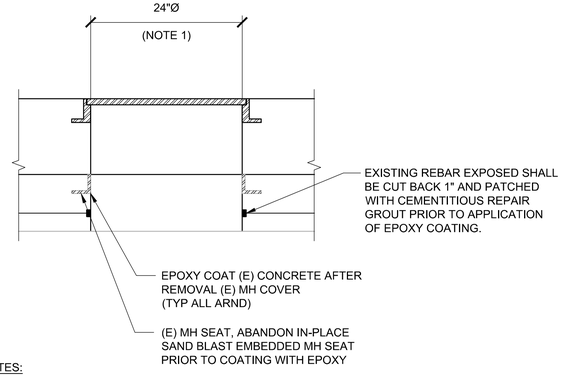

NOTES:

1. REFER TO STANDARD DETAIL C200/C-4 OF CONTRACT DOCUMENTS FOR ADDITIONAL INFORMATION.

SECTION B - SCALE:1"=1'-0"

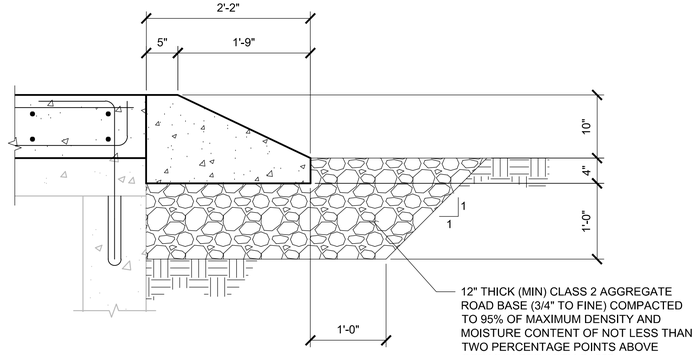

CALTRANS TYPE "D4" CURB (STANDARD PLAN A87A)

DETAIL 2/- NTS

RECORD DRAWING

THIS RECORD DRAWING HAS BEEN PREPARED FROM THE ORIGINAL CONTRACT DOCUMENTS SIGNED AND SEALED BY THE RESPONSIBLE ENGINEER OF RECORD. ADDITIONAL INFORMATION HAS BEEN PROVIDED BY OTHERS TO REPRESENT AS-CONSTRUCTED CONDITION AND IS SHOWN ON THESE RECORD DRAWINGS. THE RESPONSIBLE ENGINEER OF RECORD CANNOT VERIFY THE ACCURACY OF THE AS-CONSTRUCTED CONDITION INFORMATION REPRESENTED ON THE RECORD DRAWINGS.

0" 1" VERIFY SCALES
BAR IS ONE INCH
LONG ON FULL
SIZE DRAWING.
IF NOT ONE INCH
LONG ON THIS
DRAWING, ADJUST
SCALES ACCORDINGLY

TJC and ASSOCIATES, INC.

Woodard & Curran

REV	DATE	BY	APVD	DESCRIPTION

DESIGNED	RKT
DRAWN	ADM
CHECKED	TJC

SUBMITTED: MARK TAKEMOTO, RMC PROJECT ENGINEER CE-64369

APPROVED: STEVE CLARY, RMC ENGINEER CE-30318

SAUSALITO · MARIN CITY SANITARY DISTRICT

TREATMENT AND WET WEATHER FLOW UPGRADE

VALVE VAULT TOP SLAB

DWG NO	S-18
SHEET NO	OF 226
PROJ NO	055-006
DATE	JULY 2022

FILENAME: 0055-006-S18 9-19-22 11:58am BeeVue || XREFS: X-SMCSD-TBLK | X-Site | X-Topo Survey |<<--

Last Saved By: BeeVue 7-14-22 11:34am

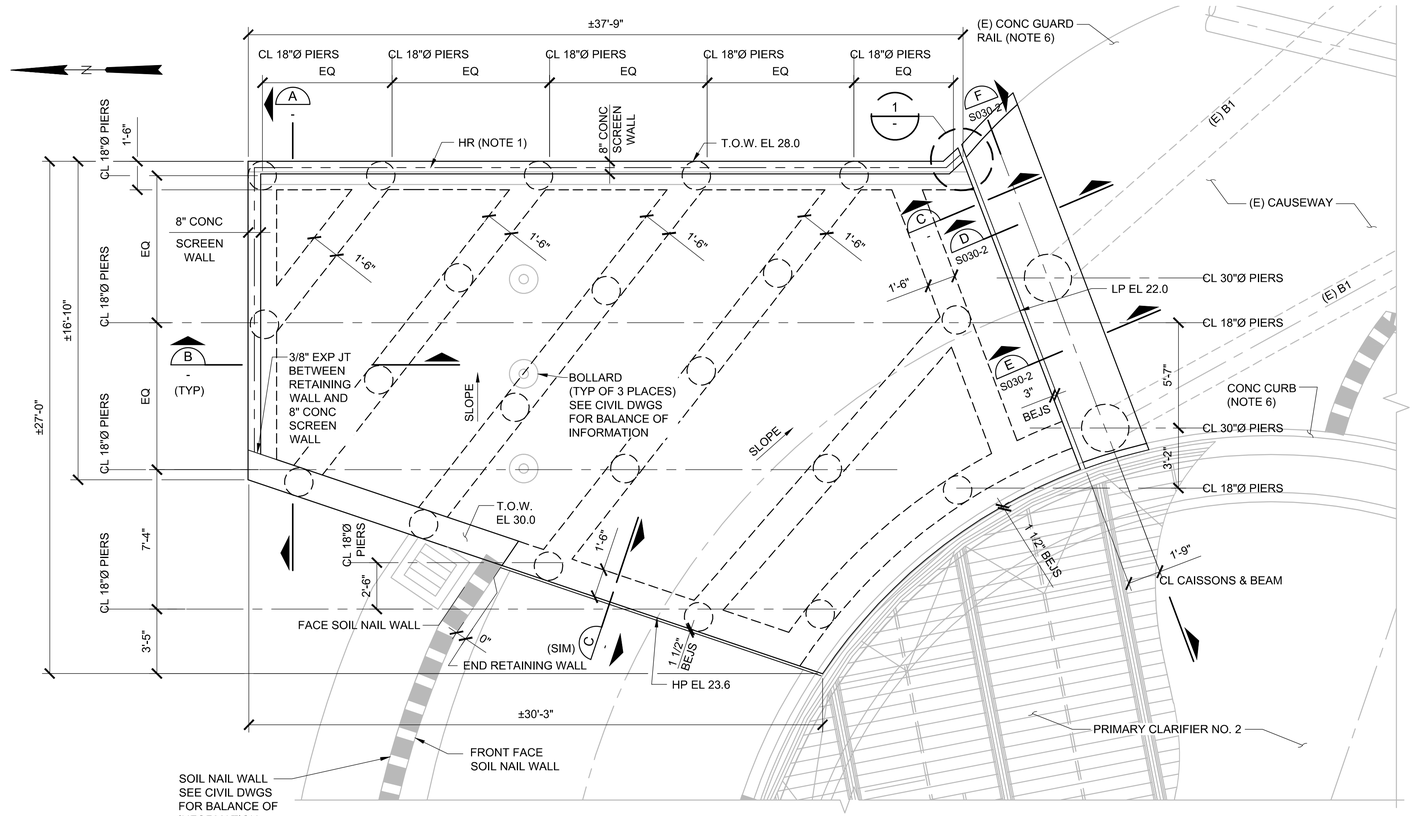

VIEWING AREA PLAN

SCALE: 1/4"=1'-0"

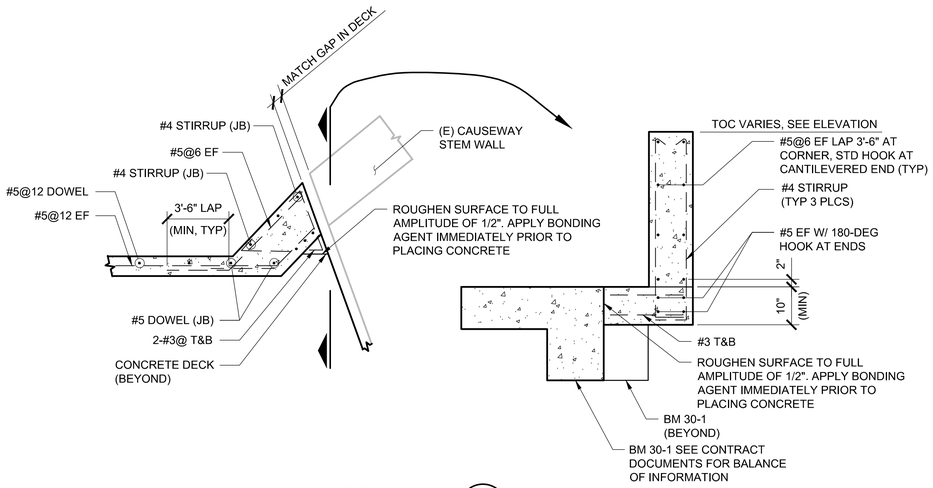

DETAIL 1

SCALE: NTS

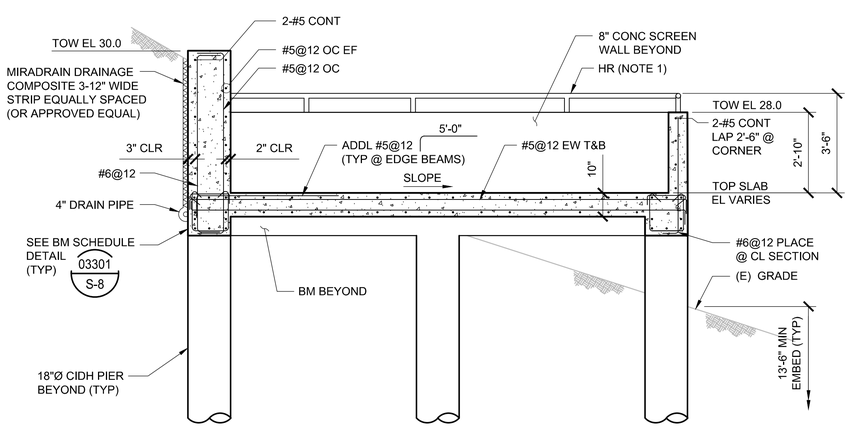

SECTION A

SCALE: 3/8"=1'-0"

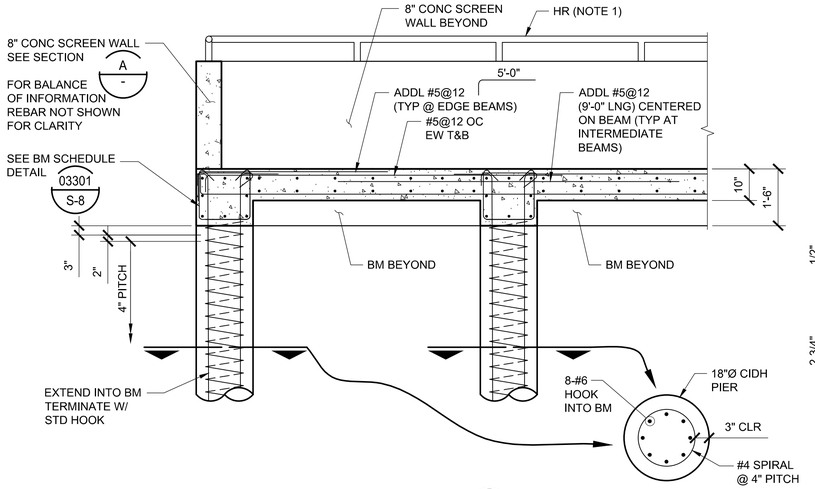

SECTION B

SCALE: 1/2"=1'-0"

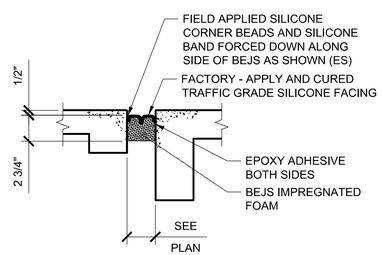

EMSEAL - BRIDGE EXPANSION JOINT SYSTEM (BEJS) OR APPROVED EQUAL

SECTION C

SCALE: NTS

NOTES:

1. HANDRAIL IS A DEFERRED SUBMITTAL ITEM AND IS THE RESPONSIBILITY OF THE CONTRACTOR. DEFERRED SUBMITTAL ITEMS HAVE NOT BEEN DESIGNED BY THE ENGINEER OF RECORD, REFER TO CONTRACT DOCUMENTS FOR ADDITIONAL INFORMATION.
2. NEW REINFORCING BARS SHALL BE EPOXY COATED IN ACCORDANCE WITH ASTM B1775.
3. REMOVE CONCRETE IN A MANNER THAT DOES NOT DAMAGE EXISTING DECK OR BEAM REBAR. DAMAGED REBAR, IN THE OPINION OF THE ENGINEER, SHALL BE REPLACED AT CONTRACTOR'S EXPENSE.
4. ROUGHEN SURFACE TO FULL AMPLITUDE OF 1/2" AT BEAMS (1/4" AT DECK) TYPICAL ALL CONSTRUCTION JOINTS.
5. CONTRACTOR SHALL ENSURE THAT SUFFICIENT EXIST REBAR LENGTHS ARE LEFT IN-PLACE AND UNDAMAGED FOR INCORPORATION INTO NEW WORK.
6. AT CONTRACTOR'S OPTION EXISTING CONCRETE GUARD RAIL MAYBE LEFT IN-PLACE, PARTIAL DEMOLITION OR REMOVED AND RE-BUILT IN-KIND.
7. EXTEND 10-#11 INTO EXISTING B1, REMAINDER TO BE HELD SHORT AS DETAILED.
8. AT CONTRACTOR'S OPTION, ADDITIONAL BEAM AND DECK MAY BE REMOVED TO FAN EXISTING REBAR TO ALLOW ACCESS FOR DRILL. IF THIS OPTION IS USED, KEEP AND RESTORE EXISTING REBAR AND CAST INTO NEW SECTION.

RECORD DRAWING
THIS RECORD DRAWING HAS BEEN PREPARED FROM THE ORIGINAL CONTRACT DOCUMENTS SIGNED AND SEALED BY THE RESPONSIBLE ENGINEER OF RECORD. ADDITIONAL INFORMATION HAS BEEN PROVIDED BY OTHERS TO REPRESENT AS-CONSTRUCTED CONDITION AND IS SHOWN ON THESE RECORD DRAWINGS. THE RESPONSIBLE ENGINEER OF RECORD CANNOT VERIFY THE ACCURACY OF THE AS-CONSTRUCTED CONDITION INFORMATION REPRESENTED ON THE RECORD DRAWINGS.

0" 1" VERIFY SCALES BAR IS ONE INCH LONG ON FULL SIZE DRAWING. IF NOT ONE INCH LONG ON THIS DRAWING, ADJUST SCALES ACCORDINGLY

TJC and ASSOCIATES, INC.

Woodard & Curran

REV	DATE	BY	APVD	DESCRIPTION

DESIGNED
DRAWN
CHECKED

SUBMITTED: MARK TAKEMOTO, RMC PROJECT ENGINEER CE-64369
APPROVED: STEVE CLARY, RMC ENGINEER CE-30318

SAUSALITO · MARIN CITY SANITARY DISTRICT

TREATMENT AND WET WEATHER FLOW UPGRADE

VIEWING AREA & CAUSEWAY

DWG NO	S030-1
SHEET NO	OF 226
PROJ NO	055-006
DATE	JULY 2022

FILENAME: 0055-006-S030-01 9-19-22 11:58am BeeVue || XREFS:| S-VIEW_AREA-PLAN-SECT | X-Site | X-SMCSD-TBLK |<<--

Last Saved By: BeeVue 9-01-21 09:38am

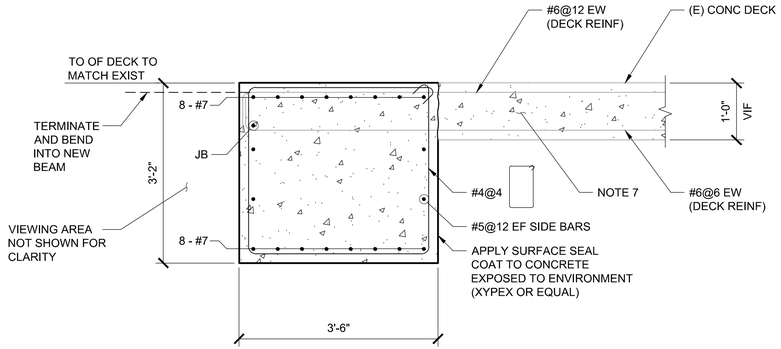

SECTION D

SCALE: 3/4"=1'-0" S030-1

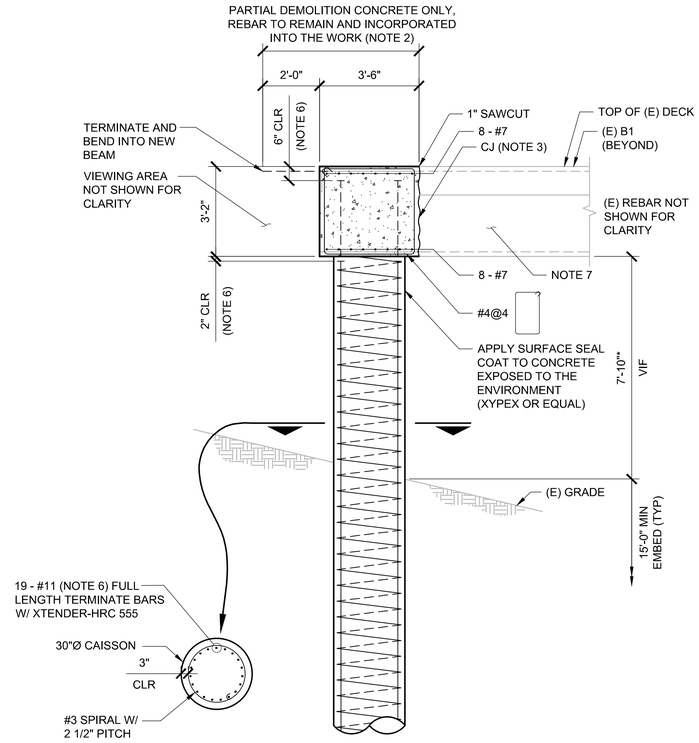

SECTION E

SCALE: 1/2"=1'-0" S030-1

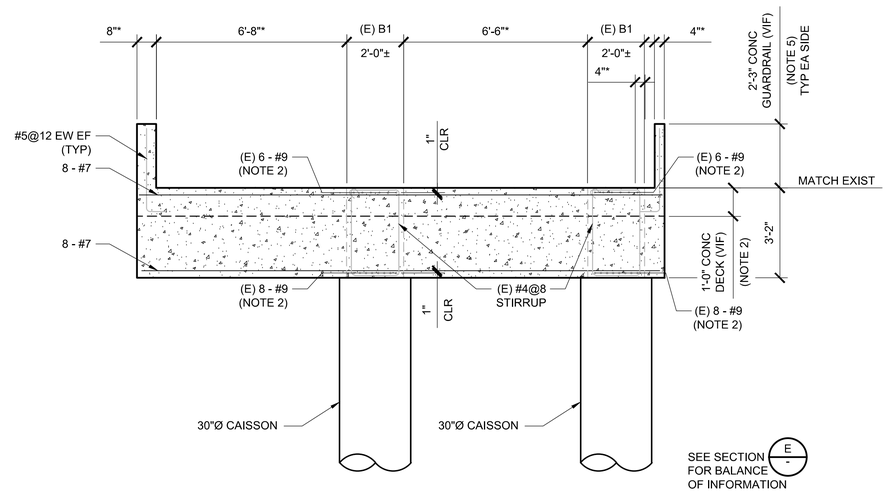

SECTION F

SCALE: 3/8"=1'-0" S030-1

NOTES:

1. NEW REINFORCING BARS SHALL BE EPOXY COATED IN ACCORDANCE WITH ASTM B1775.
2. REMOVE CONCRETE IN A MANNER THAT DOES NOT DAMAGE EXISTING DECK OR BEAM REBAR. DAMAGED REBAR, IN THE OPINION OF THE ENGINEER, SHALL BE REPLACED AT CONTRACTOR'S EXPENSE.
3. ROUGHEN SURFACE TO FULL AMPLITUDE OF 1/2" AT BEAMS (1/4" AT DECK) TYPICAL ALL CONSTRUCTION JOINTS.
4. CONTRACTOR SHALL ENSURE THAT SUFFICIENT EXIST REBAR LENGTHS ARE LEFT IN-PLACE AND UNDAMAGED FOR INCORPORATION INTO NEW WORK.
5. AT CONTRACTOR'S OPTION EXISTING CONCRETE GUARD RAIL MAYBE LEFT IN-PLACE, PARTIAL DEMOLITION OR REMOVED AND RE-BUILT IN-KIND.
6. EXTEND 10-#11 INTO EXISTING B1, REMAINDER TO BE HELD SHORT AS DETAILED.
7. AT CONTRACTOR'S OPTION, ADDITIONAL BEAM AND DECK MAY BE REMOVED TO FAN EXISTING REBAR TO ALLOW ACCESS FOR DRILL. IF THIS OPTION IS USED, KEEP AND RESTORE EXISTING REBAR AND CAST INTO NEW SECTION.

RECORD DRAWING
THIS RECORD DRAWING HAS BEEN PREPARED FROM THE ORIGINAL CONTRACT DOCUMENTS SIGNED AND SEALED BY THE RESPONSIBLE ENGINEER OF RECORD. ADDITIONAL INFORMATION HAS BEEN PROVIDED BY OTHERS TO REPRESENT AS-CONSTRUCTED CONDITION AND IS SHOWN ON THESE RECORD DRAWINGS. THE RESPONSIBLE ENGINEER OF RECORD CANNOT VERIFY THE ACCURACY OF THE AS-CONSTRUCTED CONDITION INFORMATION REPRESENTED ON THE RECORD DRAWINGS.

0" 1" VERIFY SCALES
BAR IS ONE INCH LONG ON FULL SIZE DRAWING. IF NOT ONE INCH LONG ON THIS DRAWING, ADJUST SCALES ACCORDINGLY

TJC and ASSOCIATES, INC.

Woodard & Curran

REV	DATE	BY	APVD	DESCRIPTION

DESIGNED	RKT
DRAWN	BV
CHECKED	TJC

SUBMITTED: MARK TAKEMOTO
RMC PROJECT ENGINEER CE-64369

APPROVED: STEVE CLARY
RMC ENGINEER CE-30318

SAUSALITO · MARIN CITY SANITARY DISTRICT

TREATMENT AND WET WEATHER FLOW UPGRADE

VIEWING AREA & CAUSEWAY SECTIONS

DWG NO	S030-2
SHEET NO	OF 226
PROJ NO	055-006
DATE	JULY 2022

FILENAME: 0055-006-S030-02 9-19-22 11:59am BeeVue || XREFS: | S-VIEW_AREA-PLAN-SECT | X-Site | X-SMCSD-TBLK |<<--
Last Saved By: BeeVue 9-01-21 09:38am

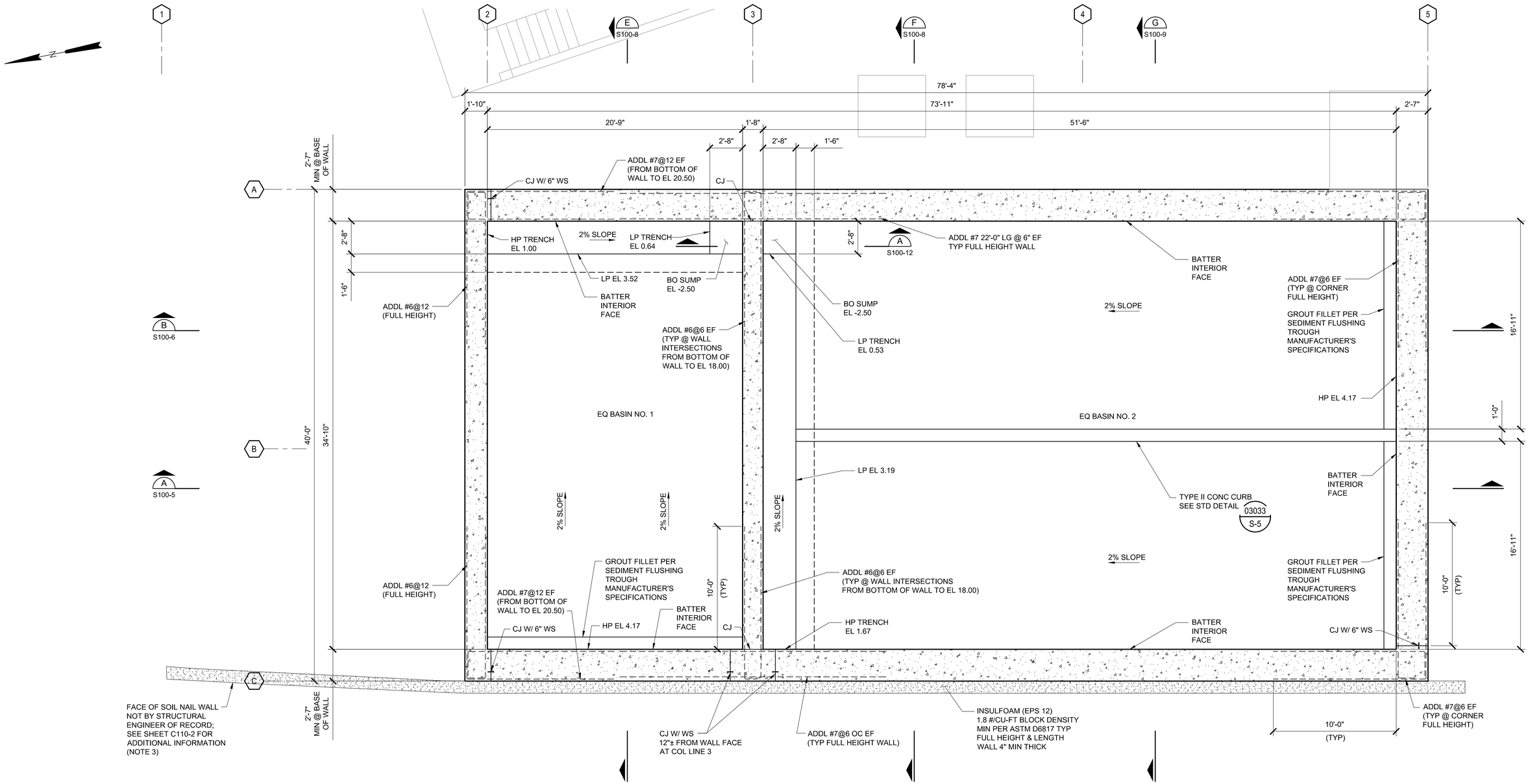

EQ BASIN
FOUNDATION PLAN EL 4.17

SCALE: 1/4"=1'-0"

NOTES:

1. ALL CORNERS AND INTERSECTIONS SHALL HAVE "ADDED" WALL REINFORCEMENT AS SHOWN ON STANDARD DETAILS 3001 & 3002.
2. SEE ARCHITECTURAL DRAWINGS FOR EXTENT OF TEXTURED CONCRETE WALL AREAS. COORDINATE WALL REINFORCEMENT WITH STANDARD DETAIL 03040 TO ENSURE PROPER CONCRETE COVER.
3. ANCHOR DOWELS/ANCHORAGE DEVICE SHALL NOT BE EMBEDDED WITHIN THE CONCRETE OF THE STRUCTURE.

RECORD DRAWING
THIS RECORD DRAWING HAS BEEN PREPARED FROM THE ORIGINAL CONTRACT DOCUMENTS SIGNED AND SEALED BY THE RESPONSIBLE ENGINEER OF RECORD. ADDITIONAL INFORMATION HAS BEEN PROVIDED BY OTHERS TO REPRESENT AS-CONSTRUCTED CONDITION AND IS SHOWN ON THESE RECORD DRAWINGS. THE RESPONSIBLE ENGINEER OF RECORD CANNOT VERIFY THE ACCURACY OF THE AS-CONSTRUCTED CONDITION INFORMATION REPRESENTED ON THE RECORD DRAWINGS.

0" 1"
VERIFY SCALES
BAR IS ONE INCH
LONG ON FULL
SIZE DRAWING.
IF NOT ONE INCH
LONG ON THIS
DRAWING, ADJUST
SCALES ACCORDINGLY

TJC and ASSOCIATES, INC.

Woodard & Curran

REV	DATE	BY	APVD	DESCRIPTION
1				
2				
3				
4				
5				

DESIGNED	RKT
DRAWN	ADM
CHECKED	DMY

SUBMITTED: MARK TAKEMOTO
RMC PROJECT ENGINEER CE-64369

APPROVED: STEVE CLARY
RMC ENGINEER CE-30318

SAUSALITO · MARIN CITY SANITARY DISTRICT

TREATMENT AND WET WEATHER FLOW UPGRADE

EQ BASIN
FOUNDATION PLAN EL 4.17

DWG NO	S100-1
SHEET NO	OF 226
PROJ NO	055-006
DATE	JULY 2022

FILENAME: 0055-006-S100-01 9-19-22 11:59am BeeVue || XREFS: X-SMCSD-TBLK | S-HEADWORKS-PLAN | X-SitePlan | X-Treatment Plant site plan | X-Topo Survey new |<<--

Last Saved By: BeeVue 9-01-21 09:37am

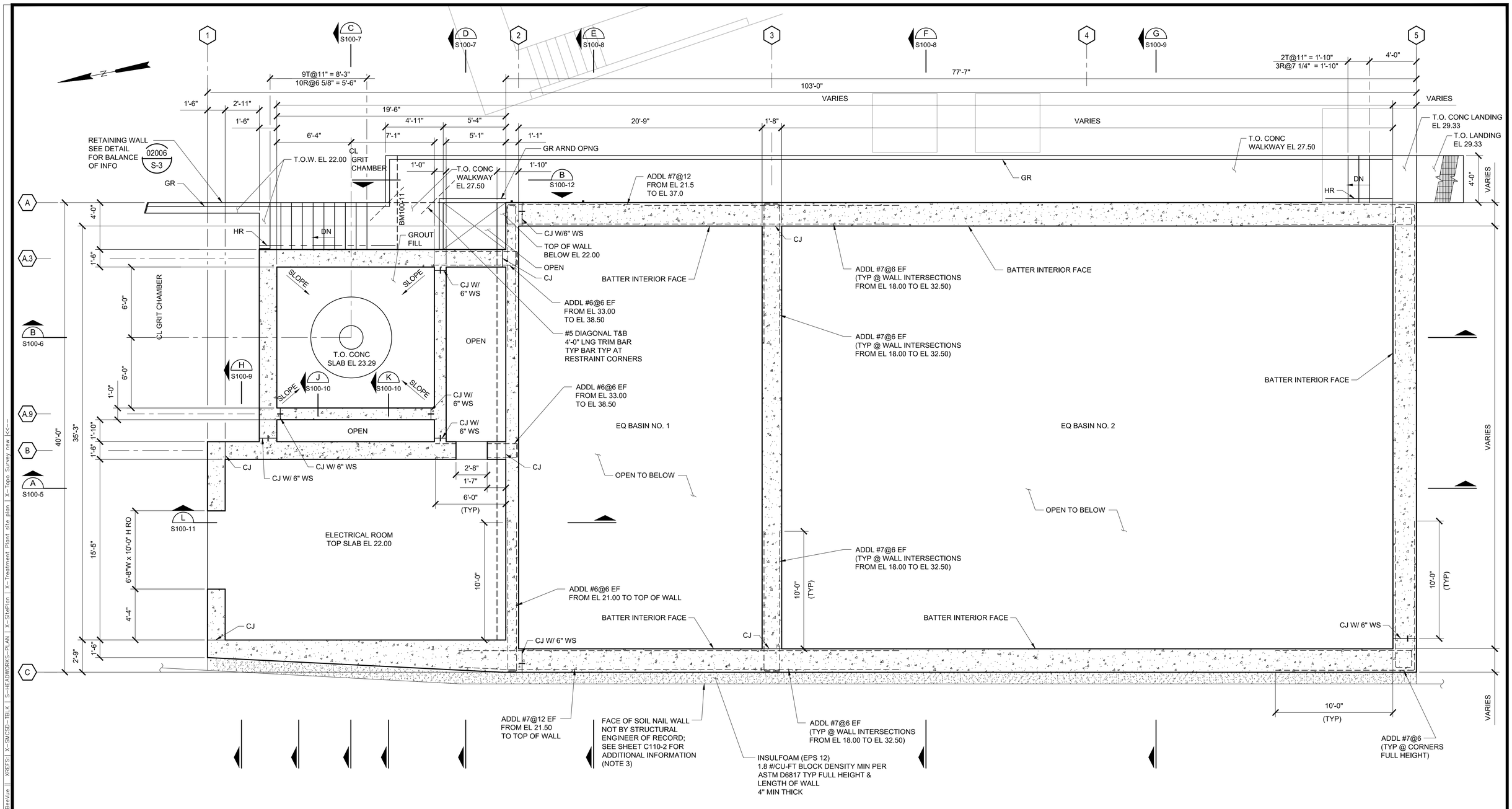

HEADWORKS/EQ BASIN FOUNDATION PLAN EL 29.50

SCALE: 1/4"=1'-0"

NOTES:

1. ALL CORNERS AND INTERSECTIONS SHALL HAVE "ADDED" WALL REINFORCEMENT AS SHOWN ON STANDARD DETAILS 3001 & 3002.
2. SEE ARCHITECTURAL DRAWINGS FOR EXTENT OF TEXTURED CONCRETE WALL AREAS. COORDINATE WALL REINFORCEMENT WITH STANDARD DETAIL 03040 TO ENSURE PROPER CONCRETE COVER.
3. ANCHOR DOWELS/ANCHORAGE DEVICE SHALL NOT BE EMBEDDED WITHIN THE CONCRETE OF THE STRUCTURE.

RECORD DRAWING
THIS RECORD DRAWING HAS BEEN PREPARED FROM THE ORIGINAL CONTRACT DOCUMENTS SIGNED AND SEALED BY THE RESPONSIBLE ENGINEER OF RECORD. ADDITIONAL INFORMATION HAS BEEN PROVIDED BY OTHERS TO REPRESENT AS-CONSTRUCTED CONDITION AND IS SHOWN ON THESE RECORD DRAWINGS. THE RESPONSIBLE ENGINEER OF RECORD CANNOT VERIFY THE ACCURACY OF THE AS-CONSTRUCTED CONDITION INFORMATION REPRESENTED ON THE RECORD DRAWINGS.

0" 1" VERIFY SCALES
BAR IS ONE INCH
LONG ON FULL
SIZE DRAWING.
IF NOT ONE INCH
LONG ON THIS
DRAWING, ADJUST
SCALES ACCORDINGLY

TJC and ASSOCIATES, INC.

Woodard & Curran

REV	DATE	BY	APVD	DESCRIPTION

DESIGNED	RKT
DRAWN	ADM
CHECKED	DMY

SUBMITTED: MARK TAKEMOTO
RMC PROJECT ENGINEER CE-64369

APPROVED: STEVE CLARY
RMC ENGINEER CE-30318

SAUSALITO · MARIN CITY SANITARY DISTRICT

TREATMENT AND WET WEATHER FLOW UPGRADE

HEADWORKS
FOUNDATION PLAN EL 29.50

DWG NO	S100-2
SHEET NO	OF 226
PROJ NO	055-006
DATE	JULY 2022

FILENAME: 055-006-S100-02 9-19-22 12:00pm BeeVue || XREFS|| X-SMCSD-TBLK | S-HEADWORKS-PLAN | X-SitePlan | X-Treatment Plant site plan | X-Topo Survey new |<<--

Last Saved By: BeeVue 9-19-22 12:00pm

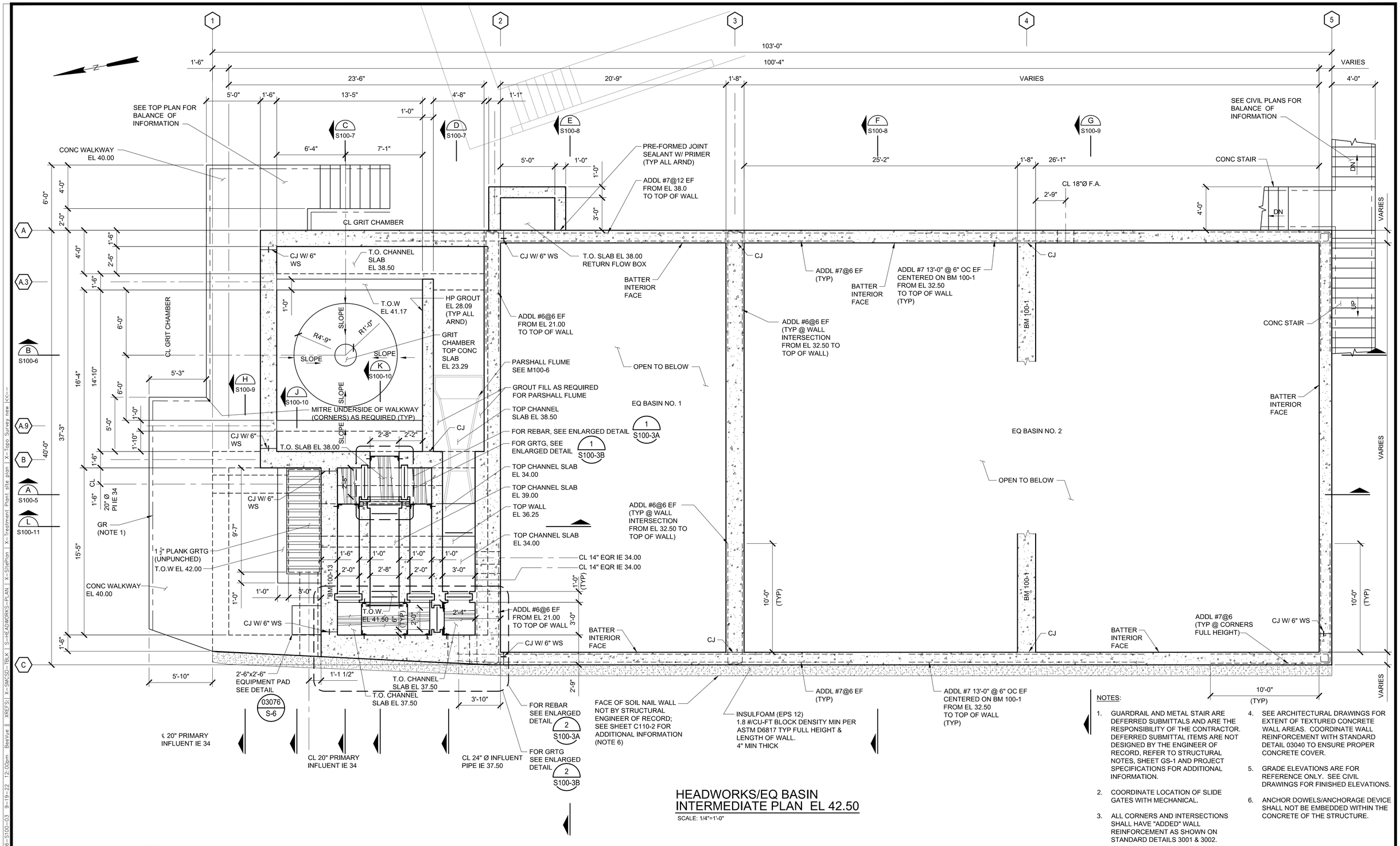

HEADWORKS/EQ BASIN INTERMEDIATE PLAN EL 42.50

SCALE: 1/4"=1'-0"

NOTES:

1. GUARDRAIL AND METAL STAIR ARE DEFERRED SUBMITTALS AND ARE THE RESPONSIBILITY OF THE CONTRACTOR. DEFERRED SUBMITTAL ITEMS ARE NOT DESIGNED BY THE ENGINEER OF RECORD, REFER TO STRUCTURAL NOTES, SHEET GS-1 AND PROJECT SPECIFICATIONS FOR ADDITIONAL INFORMATION.
2. COORDINATE LOCATION OF SLIDE GATES WITH MECHANICAL.
3. ALL CORNERS AND INTERSECTIONS SHALL HAVE "ADDED" WALL REINFORCEMENT AS SHOWN ON STANDARD DETAILS 3001 & 3002.
4. SEE ARCHITECTURAL DRAWINGS FOR EXTENT OF TEXTURED CONCRETE WALL AREAS. COORDINATE WALL REINFORCEMENT WITH STANDARD DETAIL 03040 TO ENSURE PROPER CONCRETE COVER.
5. GRADE ELEVATIONS ARE FOR REFERENCE ONLY. SEE CIVIL DRAWINGS FOR FINISHED ELEVATIONS.
6. ANCHOR DOWELS/ANCHORAGE DEVICE SHALL NOT BE EMBEDDED WITHIN THE CONCRETE OF THE STRUCTURE.

RECORD DRAWING

THIS RECORD DRAWING HAS BEEN PREPARED FROM THE ORIGINAL CONTRACT DOCUMENTS SIGNED AND SEALED BY THE RESPONSIBLE ENGINEER OF RECORD. ADDITIONAL INFORMATION HAS BEEN PROVIDED BY OTHERS TO REPRESENT AS-CONSTRUCTED CONDITION AND IS SHOWN ON THESE RECORD DRAWINGS. THE RESPONSIBLE ENGINEER OF RECORD CANNOT VERIFY THE ACCURACY OF THE AS-CONSTRUCTED CONDITION INFORMATION REPRESENTED ON THE RECORD DRAWINGS.

0" 1" VERIFY SCALES BAR IS ONE INCH LONG ON FULL SIZE DRAWING. IF NOT ONE INCH LONG ON THIS DRAWING, ADJUST SCALES ACCORDINGLY

TJC and ASSOCIATES, INC.

Woodard & Curran

REV	DATE	BY	APVD	DESCRIPTION

DESIGNED	RKT
DRAWN	ADM
CHECKED	DMY

SUBMITTED: MARK TAKEMOTO, RMC PROJECT ENGINEER CE-64369

APPROVED: STEVE CLARY, RMC ENGINEER CE-30318

SAUSALITO · MARIN CITY SANITARY DISTRICT

TREATMENT AND WET WEATHER FLOW UPGRADE

HEADWORKS/EQ BASIN INTERMEDIATE PLAN EL 42.50

DWG NO	S100-3
SHEET NO	OF 226
PROJ NO	055-006
DATE	JULY 2022

FILENAME: 055-006-S100-03 | 9-19-22 12:00pm | BeeVue || XREFS: | X-SMCSD-TBLK | S-HEADWORKS-PLAN | X-SitePlan | X-Treatment Plant site plan | X-Topo Survey new <<--

Last Saved By: BeeVue 9-19-22 12:00pm

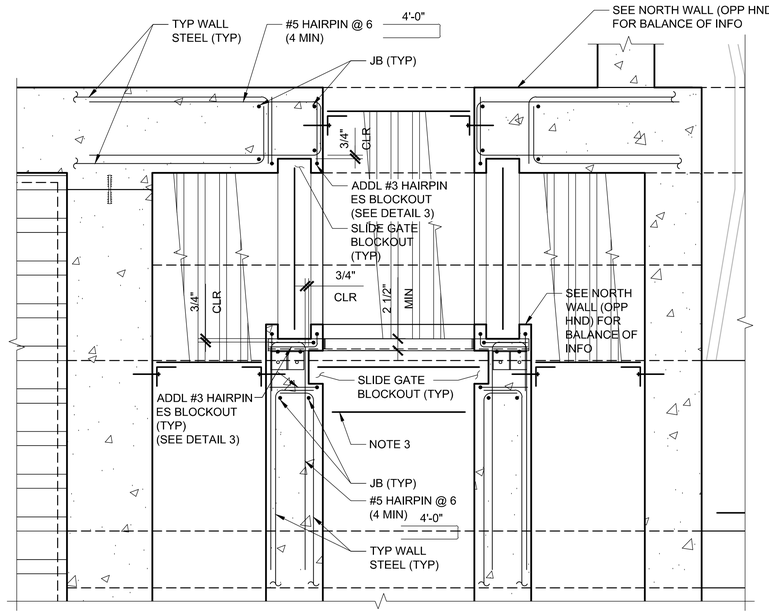

DETAIL 1
SCALE: 3/4"=1'-0" S100-3

NOTES:

1. CONCRETE COVER 2" UNLESS OTHERWISE NOTED.
2. SEE DETAIL 3 FOR LOCATION OF REBAR AT BLOCKOUTS.
3. PLANK GRATING SUPPORTS TO BE FIELD FITTED TO AVOID CONFLICT WITH GATES, AS DIRECTED BY THE DISTRICT.

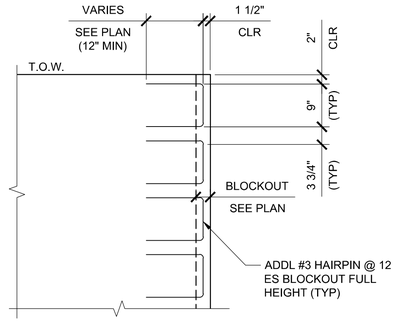

DETAIL 3
SCALE: 3/4"=1'-0" -

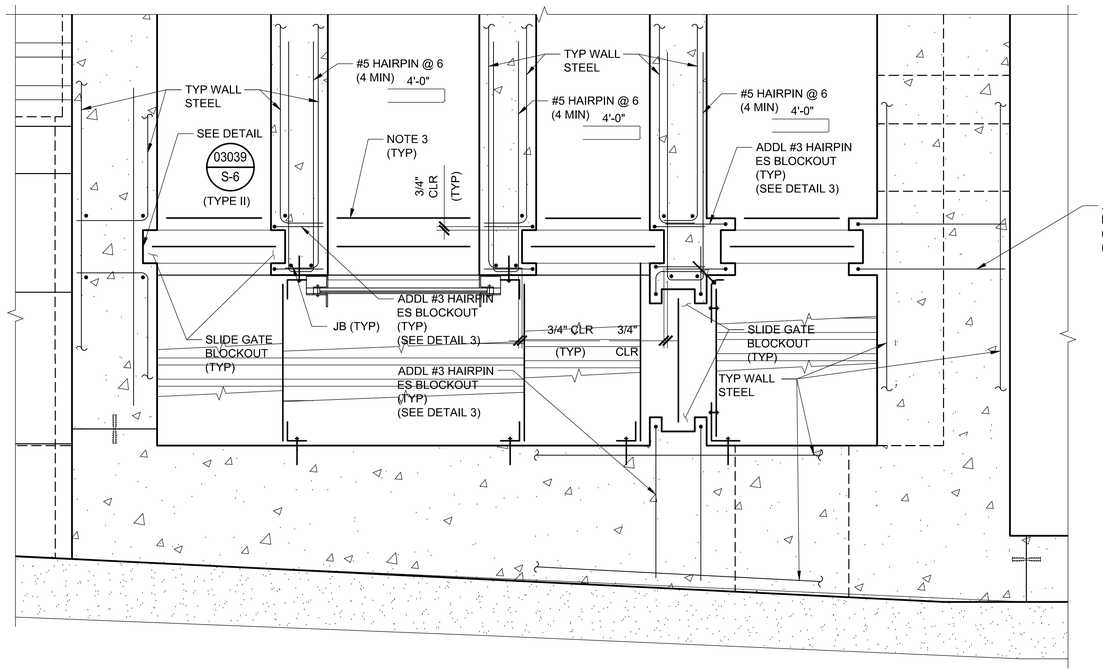

DETAIL 2
SCALE: 3/4"=1'-0" S100-3

RECORD DRAWING
THIS RECORD DRAWING HAS BEEN PREPARED FROM THE ORIGINAL CONTRACT DOCUMENTS SIGNED AND SEALED BY THE RESPONSIBLE ENGINEER OF RECORD. ADDITIONAL INFORMATION HAS BEEN PROVIDED BY OTHERS TO REPRESENT AS-CONSTRUCTED CONDITION AND IS SHOWN ON THESE RECORD DRAWINGS. THE RESPONSIBLE ENGINEER OF RECORD CANNOT VERIFY THE ACCURACY OF THE AS-CONSTRUCTED CONDITION INFORMATION REPRESENTED ON THE RECORD DRAWINGS.

0" 1" VERIFY SCALES
BAR IS ONE INCH LONG ON FULL SIZE DRAWING. IF NOT ONE INCH LONG ON THIS DRAWING, ADJUST SCALES ACCORDINGLY

TJC and ASSOCIATES, INC.

Woodard & Curran

REV	DATE	BY	APVD	DESCRIPTION

DESIGNED	RKT
DRAWN	ADM
CHECKED	DMY

SUBMITTED: MARK TAKEMOTO
RMC PROJECT ENGINEER CE-64369

APPROVED: STEVE CLARY
RMC ENGINEER CE-30318

SAUSALITO · MARIN CITY SANITARY DISTRICT

TREATMENT AND WET WEATHER FLOW UPGRADE

HEADWORKS/EQ BASIN DETAILS

DWG NO	S100-3A
SHEET NO	OF 226
PROJ NO	055-006
DATE	JULY 2022

FILENAME: 0055-006-S100-03A 9-19-22 12:01pm BeeVue || XREFS:| X-SMCSD-TBLK | S-HEADWORKS-PLAN | X-SitePlan | X-Treatment Plant site plan | X-Topo Survey new

Last Saved By: BeeVue 9-19-22 12:01pm

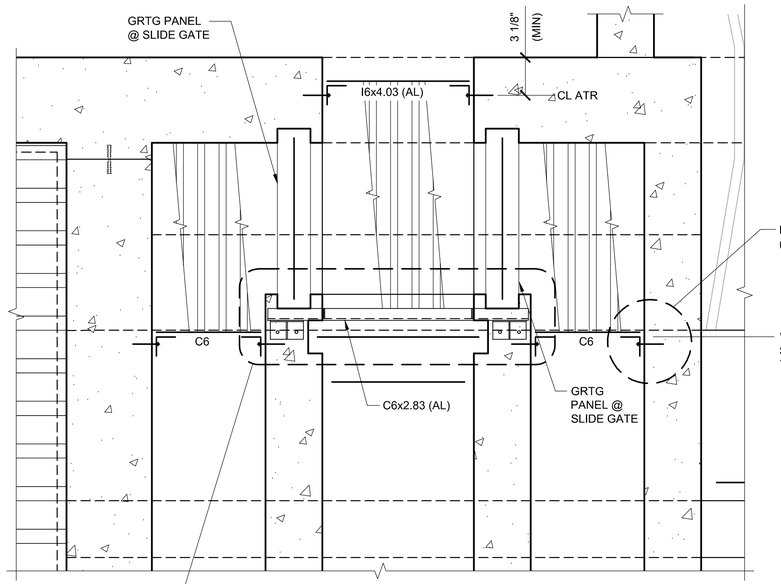

DETAIL 1

SCALE: 3/4"=1'-0" S100-3

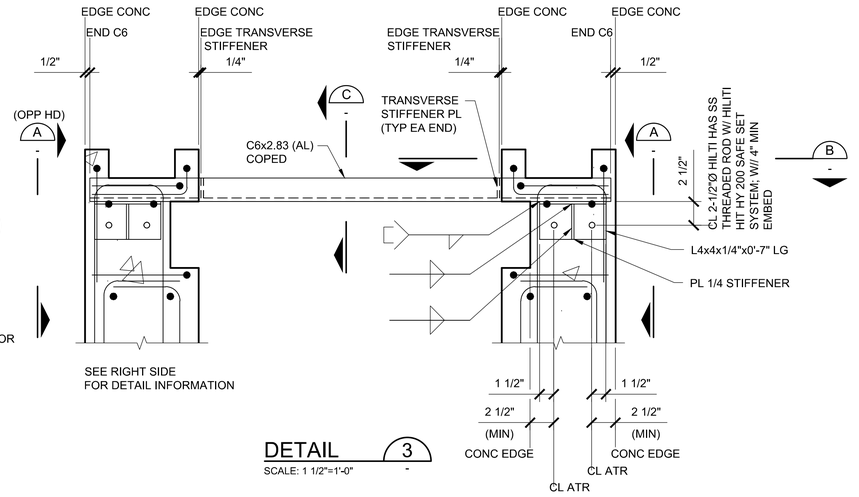

DETAIL 3

SCALE: 1 1/2"=1'-0" -

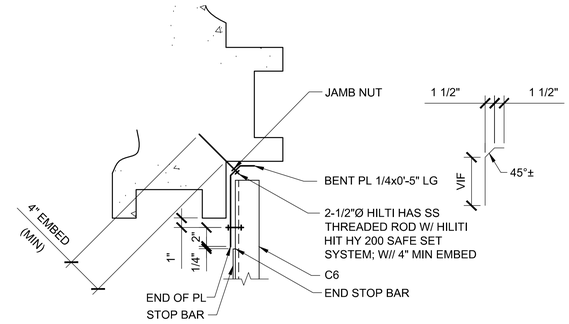

DETAIL 4

SCALE: 1 1/2"=1'-0" -

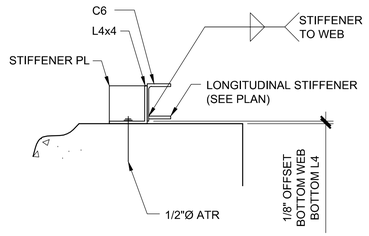

SECTION A

SCALE: 1 1/2"=1'-0" -

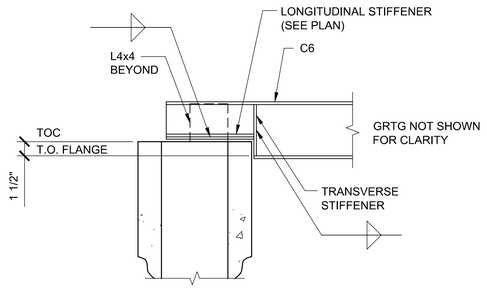

SECTION B

SCALE: 1 1/2"=1'-0" -

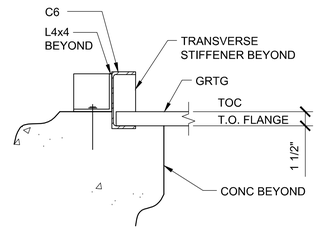

SECTION C

SCALE: 1 1/2"=1'-0" -

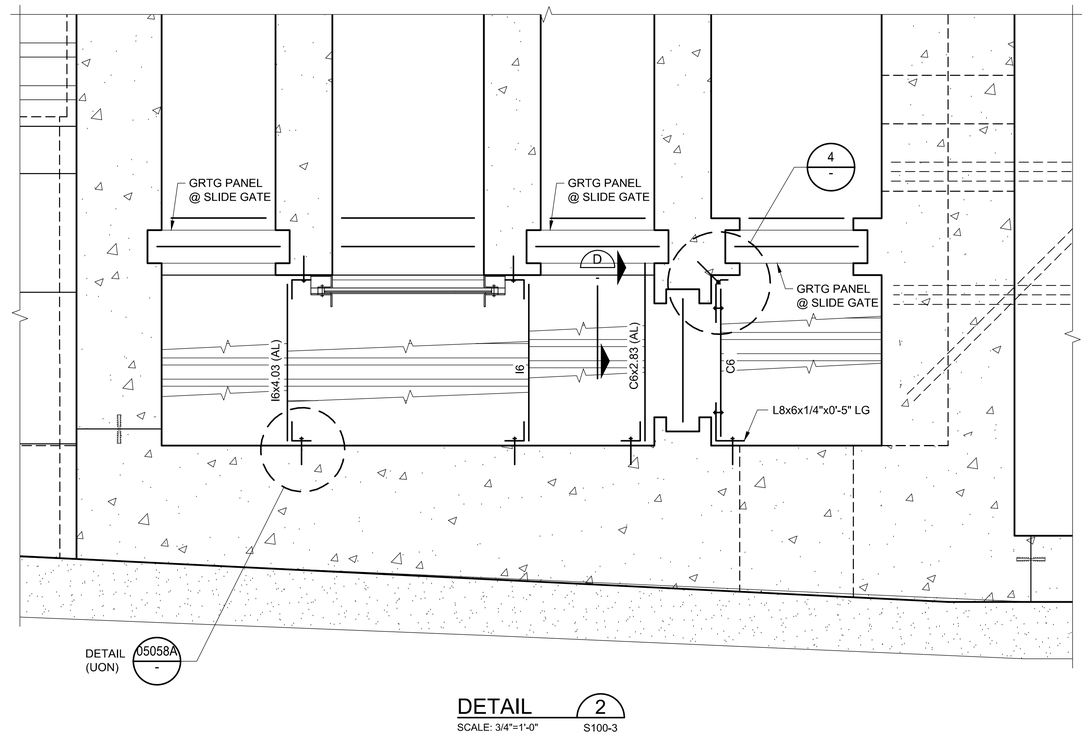

DETAIL 2

SCALE: 3/4"=1'-0" S100-3

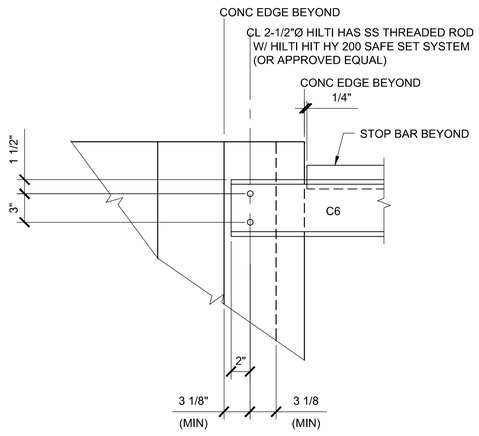

SECTION D

SCALE: 1 1/2"=1'-0" -

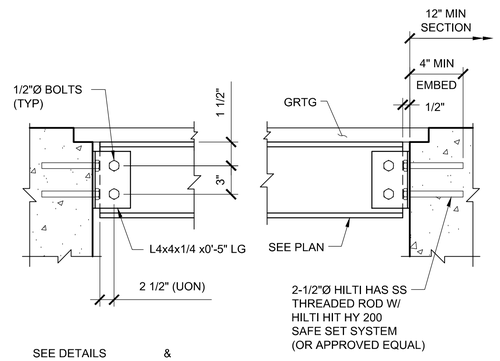

GRATING END SUPPORT

DETAIL 05058A VAR

NTS

RECORD DRAWING
THIS RECORD DRAWING HAS BEEN PREPARED FROM THE ORIGINAL CONTRACT DOCUMENTS SIGNED AND SEALED BY THE RESPONSIBLE ENGINEER OF RECORD. ADDITIONAL INFORMATION HAS BEEN PROVIDED BY OTHERS TO REPRESENT AS-CONSTRUCTED CONDITION AND IS SHOWN ON THESE RECORD DRAWINGS. THE RESPONSIBLE ENGINEER OF RECORD CANNOT VERIFY THE ACCURACY OF THE AS-CONSTRUCTED CONDITION INFORMATION REPRESENTED ON THE RECORD DRAWINGS.

0" 1" VERIFY SCALES
BAR IS ONE INCH
LONG ON FULL
SIZE DRAWING.
IF NOT ONE INCH
LONG ON THIS
DRAWING, ADJUST
SCALES ACCORDINGLY

TJC and ASSOCIATES, INC.

Woodard & Curran

REV	DATE	BY	APVD	DESCRIPTION

DESIGNED	RKT
DRAWN	ADM
CHECKED	DMY

SUBMITTED: MARK TAKEMOTO
RMC PROJECT ENGINEER CE-64369

APPROVED: STEVE CLARY
RMC ENGINEER CE-30318

SAUSALITO · MARIN CITY SANITARY DISTRICT

TREATMENT AND WET WEATHER FLOW UPGRADE

HEADWORKS/EQ BASIN DETAILS

DWG NO	S100-3B
SHEET NO	OF 226
PROJ NO	055-006
DATE	JULY 2022

FILENAME: 0055-006-S100-03B 9-19-22 12:02pm BeeVue || XREFS: | X-SMCSD-TBLK | S-HEADWORKS-PLAN | X-SitePlan | X-Treatment Plant site plan |

Last Saved By: BeeVue 9-19-22 12:02pm

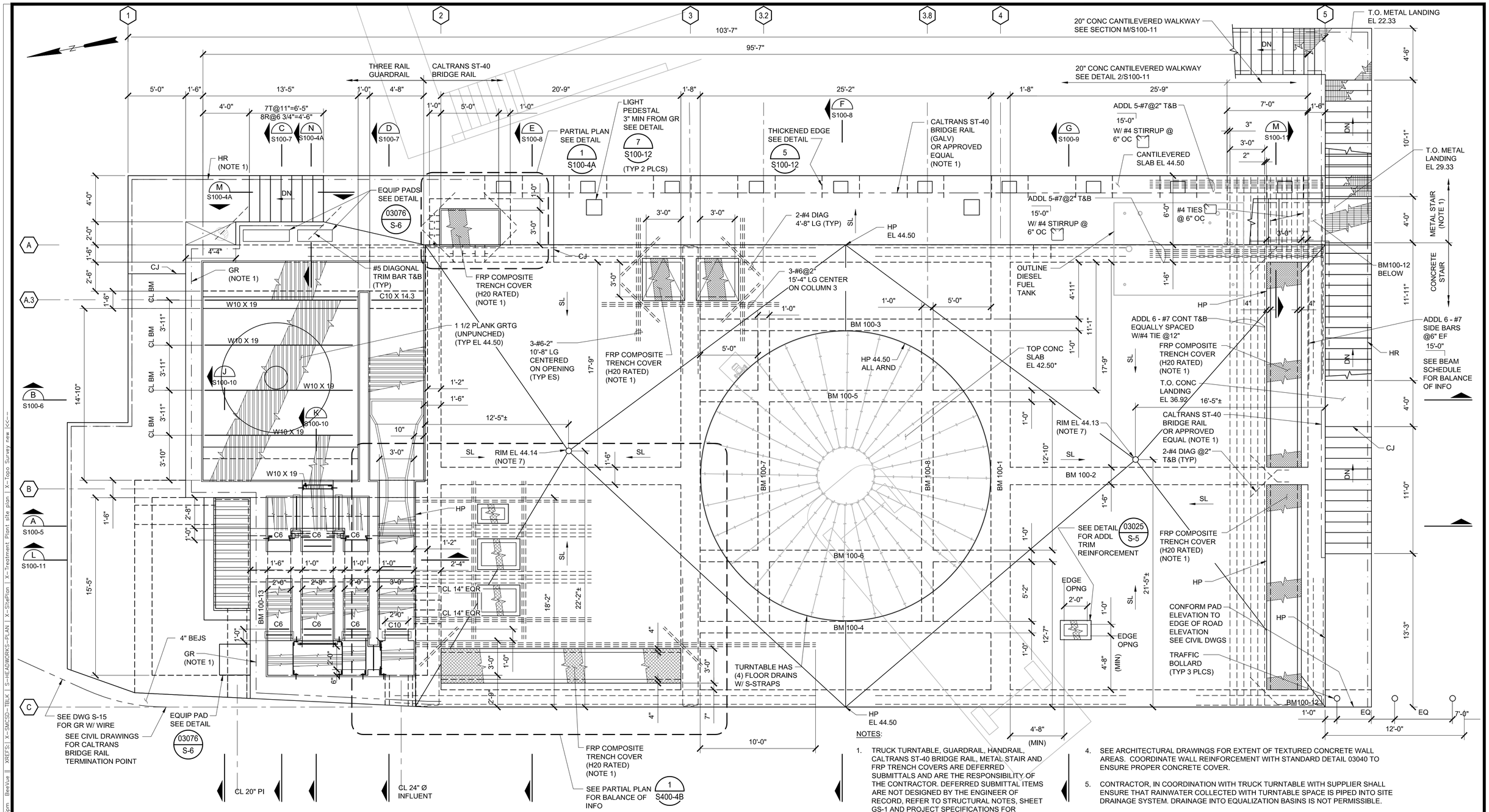

HEADWORKS/EQ BASIN TOP PLAN EL 44.50

SCALE: 1/4"=1'-0"

NOTES:

1. TRUCK TURNTABLE, GUARDRAIL, HANDRAIL, CALTRANS ST-40 BRIDGE RAIL, METAL STAIR AND FRP TRENCH COVERS ARE DEFERRED SUBMITTALS AND ARE THE RESPONSIBILITY OF THE CONTRACTOR. DEFERRED SUBMITTAL ITEMS ARE NOT DESIGNED BY THE ENGINEER OF RECORD, REFER TO STRUCTURAL NOTES, SHEET GS-1 AND PROJECT SPECIFICATIONS FOR ADDITIONAL INFORMATION.
2. COORDINATE LOCATION OF SLIDE GATES WITH MECHANICAL DRAWINGS.
3. ALL CORNERS AND INTERSECTIONS SHALL HAVE "ADDED" WALL REINFORCEMENT AS SHOWN ON STANDARD DETAILS 3001 & 3002.
4. SEE ARCHITECTURAL DRAWINGS FOR EXTENT OF TEXTURED CONCRETE WALL AREAS. COORDINATE WALL REINFORCEMENT WITH STANDARD DETAIL 03040 TO ENSURE PROPER CONCRETE COVER.
5. CONTRACTOR, IN COORDINATION WITH TRUCK TURNTABLE WITH SUPPLIER SHALL ENSURE THAT RAINWATER COLLECTED WITH TURNTABLE SPACE IS PIPED INTO SITE DRAINAGE SYSTEM. DRAINAGE INTO EQUALIZATION BASINS IS NOT PERMISSIBLE.
6. MINIMUM DECK SLOPE SHALL BE 1 PERCENT. MAXIMUM DECK SLOPE SHALL BE 3 PERCENT. CONSULT DISTRICT/ENGINEER IF MAXIMUM SLOPE WILL BE EXCEEDED.
7. LOCATIONS OF FLOOR DRAINS ARE APPROXIMATE AND MAY BE ADJUSTED BY CONTRACTOR TO COORDINATE WITH OTHER UTILITIES. RIM ELEVATIONS OF FLOOR DRAINS MAY ALSO BE ADJUSTED TO MAINTAIN MINIMUM AND MAXIMUM SLOPES WITH FINAL LAYOUT.

RECORD DRAWING
THIS RECORD DRAWING HAS BEEN PREPARED FROM THE ORIGINAL CONTRACT DOCUMENTS SIGNED AND SEALED BY THE RESPONSIBLE ENGINEER OF RECORD. ADDITIONAL INFORMATION HAS BEEN PROVIDED BY OTHERS TO REPRESENT AS-CONSTRUCTED CONDITION AND IS SHOWN ON THESE RECORD DRAWINGS. THE RESPONSIBLE ENGINEER OF RECORD CANNOT VERIFY THE ACCURACY OF THE AS-CONSTRUCTED CONDITION INFORMATION REPRESENTED ON THE RECORD DRAWINGS.

0" 1" VERIFY SCALES BAR IS ONE INCH LONG ON FULL SIZE DRAWING. IF NOT ONE INCH LONG ON THIS DRAWING, ADJUST SCALES ACCORDINGLY

TJC and ASSOCIATES, INC.

Woodard & Curran

REV	DATE	BY	APVD	DESCRIPTION

DESIGNED	RKT
DRAWN	ADM
CHECKED	DMY

SUBMITTED: MARK TAKEMOTO
RMC PROJECT ENGINEER CE-64369

APPROVED: STEVE CLARY
RMC ENGINEER CE-30318

SAUSALITO · MARIN CITY SANITARY DISTRICT

TREATMENT AND WET WEATHER FLOW UPGRADE

HEADWORKS/EQ BASIN TOP PLAN EL 44.50

DWG NO	S100-4
SHEET NO	OF 226
PROJ NO	055-006
DATE	JULY 2022

FILENAME: 0055-006-S100-04 9-19-22 12:03pm BeeVue || XREFS:| X-SMCSD-TBLK | S-HEADWORKS-PLAN | X-SitePlan | X-Treatment Plant site plan | X-Topo Survey new <<<--

Last Saved By: BeeVue 9-19-22 12:02pm

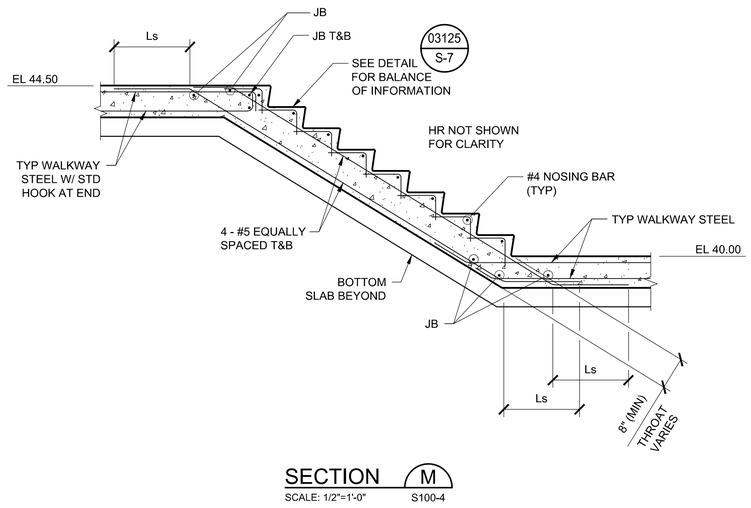

SECTION M
SCALE: 1/2"=1'-0" S100-4

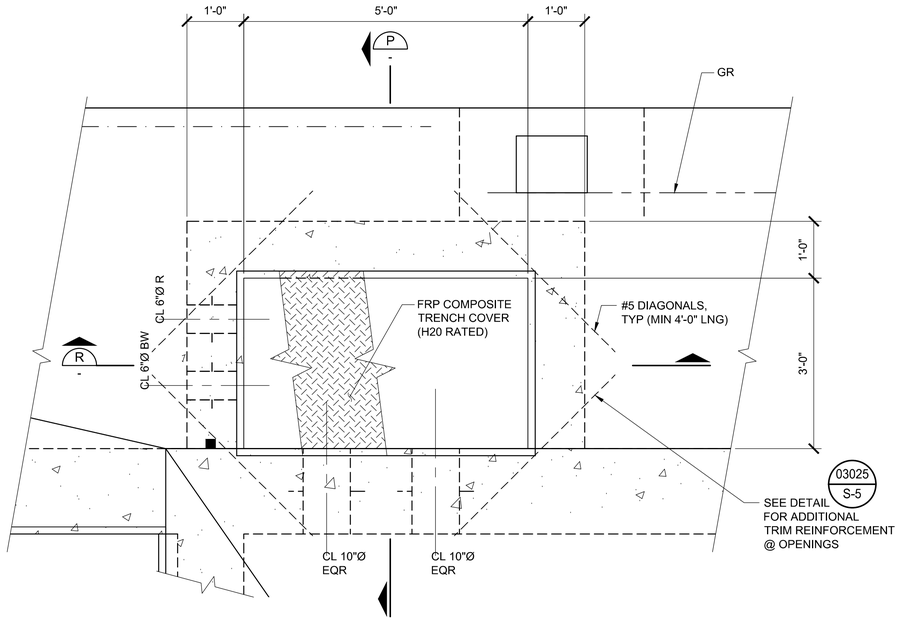

PARTIAL PLAN

DETAIL 1
SCALE: 3/4"=1'-0" S100-4

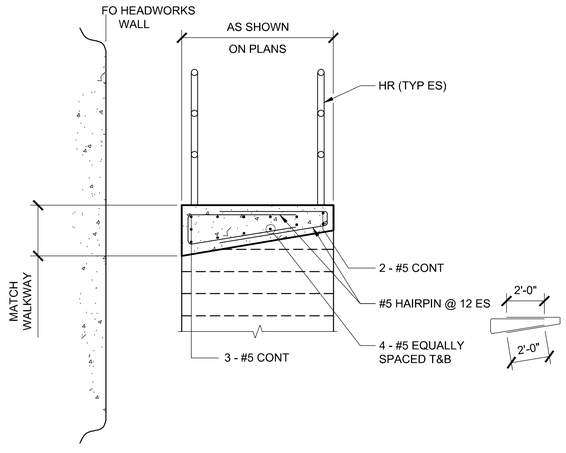

SECTION N
SCALE: 1/2"=1'-0" S100-4

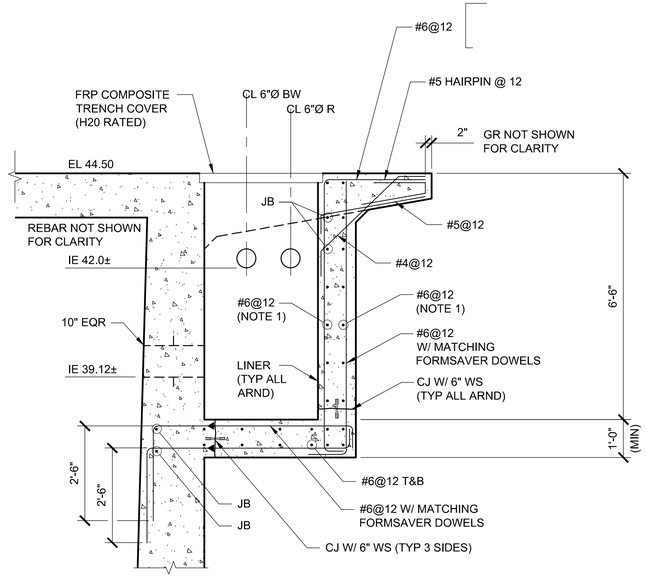

SECTION P
SCALE: 1/2"=1'-0" -

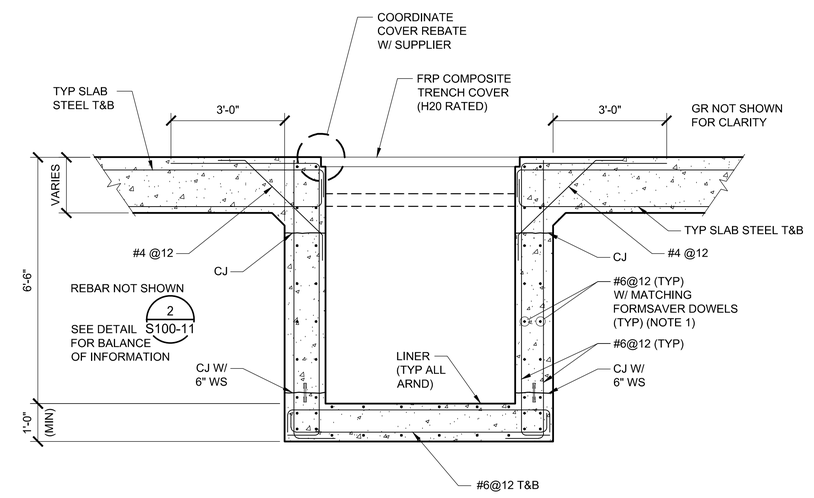

SECTION R
SCALE: 1/2"=1'-0" -

NOTES:

1. SEE DETAIL 03001/A ON DRAWING S-4, FOR BALANCE OF INFORMATION.

RECORD DRAWING
THIS RECORD DRAWING HAS BEEN PREPARED FROM THE ORIGINAL CONTRACT DOCUMENTS SIGNED AND SEALED BY THE RESPONSIBLE ENGINEER OF RECORD. ADDITIONAL INFORMATION HAS BEEN PROVIDED BY OTHERS TO REPRESENT AS-CONSTRUCTED CONDITION AND IS SHOWN ON THESE RECORD DRAWINGS. THE RESPONSIBLE ENGINEER OF RECORD CANNOT VERIFY THE ACCURACY OF THE AS-CONSTRUCTED CONDITION INFORMATION REPRESENTED ON THE RECORD DRAWINGS.

0" — 1" VERIFY SCALES BAR IS ONE INCH LONG ON FULL SIZE DRAWING. IF NOT ONE INCH LONG ON THIS DRAWING, ADJUST SCALES ACCORDINGLY

TJC and ASSOCIATES

Woodard & Curran

REV	DATE	BY	APVD	DESCRIPTION

DESIGNED	RKT
DRAWN	ADM
CHECKED	DMY

SUBMITTED: MARK TAKEMOTO
RMC PROJECT ENGINEER CE-64369

APPROVED: STEVE CLARY
RMC ENGINEER CE-30318

SAUSALITO · MARIN CITY SANITARY DISTRICT

TREATMENT AND WET WEATHER FLOW UPGRADE

HEADWORKS/EQ BASIN TOP PLAN EL 44.50 DETAIL AND SECTIONS

DWG NO	S100-4A
SHEET NO	OF 226
PROJ NO	055-006
DATE	JULY 2022

FILENAME: 0055-006-S100-04A 9-19-22 12:03pm BeeVue ||| XREFS: | S-HEADWORKS-PLAN | S-HEADWORKS-SECT | X-Headworks Sections | X-SitePlan | 0055-006-M100-4 | X-SMCSD-TBLK | X-Topo Survey new | X-Treatment Plant site plan |<<--

Last Saved By: BeeVue 9-19-22 12:03pm

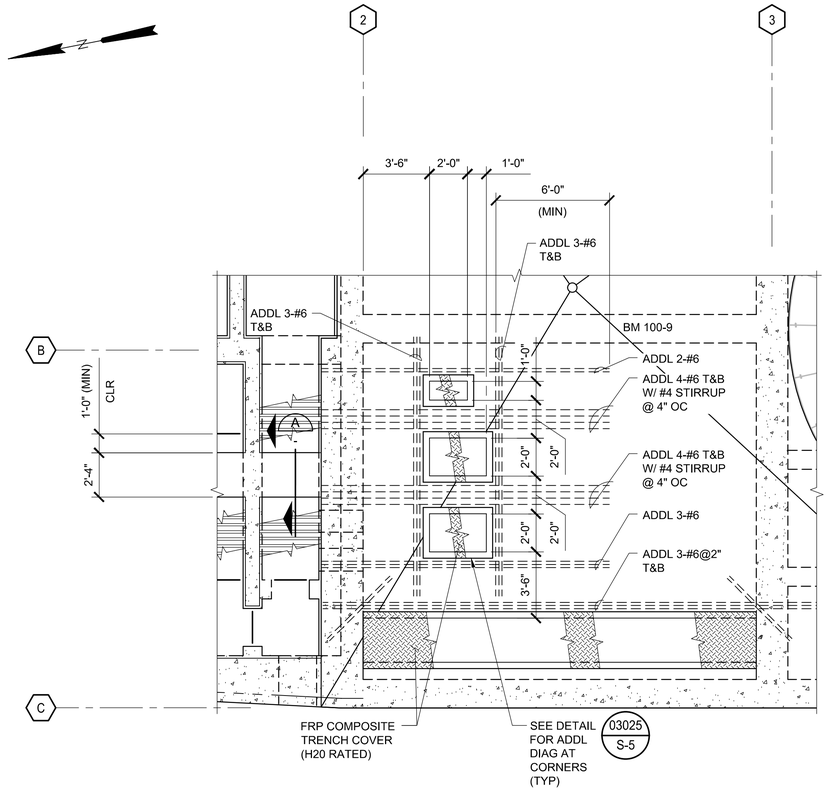

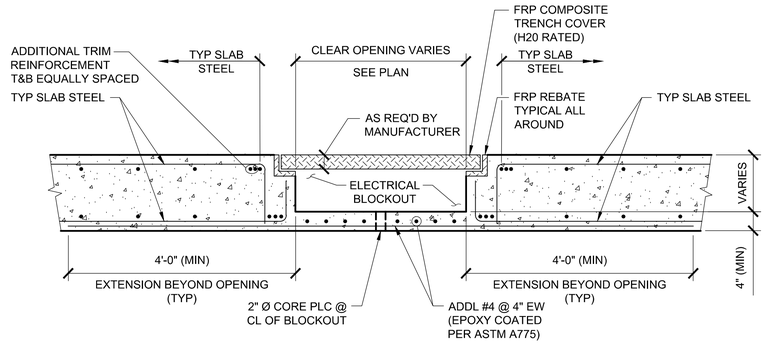

DETAIL 2

SCALE: 3/4"=1'-0"

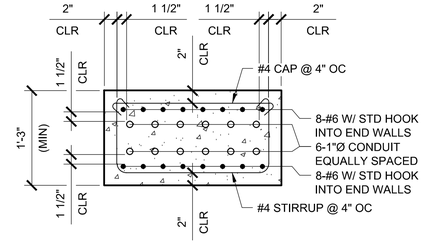

SECTION A

SCALE: 1"=1'-0"

HEADWORKS/EQ BASIN ELECTRICAL BLOCKOUTS TOP PLAN EL 44.50

1
S100-4

SCALE: 1/4"=1'-0"

CONDUITS AND PIPES EMBEDDED IN CONCRETE

1. CONDUIT, PIPES, AND SLEEVES OF ANY MATERIAL NOT HARMFUL TO CONCRETE AND WITHIN LIMITATIONS OF THE PROJECT DRAWINGS AND SPECIFICATIONS, AND ACI 318 MAY BE PERMITTED TO BE EMBEDDED IN CONCRETE SUBJECT TO PRIOR APPROVAL BY THE ENGINEER OF RECORD, PROVIDED THEY ARE NOT CONSIDERED, BY THE ENGINEER OF RECORD, TO DISPLACE STRUCTURAL CONCRETE, EXCEPT AS PROVIDED HEREIN.
2. CONDUITS AND PIPES OF ALUMINUM SHALL NOT BE EMBEDDED IN STRUCTURAL CONCRETE.
3. CONDUITS AND PIPES, WITH THEIR FITTINGS, EMBEDDED WITHIN A COLUMN SHALL NOT DISPLACE MORE THAN 4-PERCENT OF THE AREA OF THE CROSS SECTION ON WHICH THE STRENGTH IS CALCULATED OR WHICH IS REQUIRED FOR FIRE PROTECTION. THE ENGINEER OF RECORD SHALL DETERMINE IF THE STRENGTH OF THE CONSTRUCTION HAS BEEN SIGNIFICANTLY IMPAIRED.
4. CONDUITS AND PIPES EMBEDDED WITHIN A SLAB, WALL, OR BEAM SHALL SATISFY THE FOLLOWING:
   a) THEY SHALL NOT BE LARGER IN OUTSIDE DIAMETER THAN 1/3 THE OVERALL THICKNESS OF SLAB, WALL, OR BEAM IN WHICH THEY ARE EMBEDDED.
   b) MINIMUM CENTER-TO-CENTER SPACING BETWEEN CONDUIT AND/OR PIPING RUNS SHALL BE 3 TIMES OUTSIDE DIAMETER OR WIDTH.
   c) THEY SHALL BE LOCATED IN SUCH A MANNER AS TO MAINTAIN A MINIMUM OF 1-INCH CLEAR SPACE BETWEEN THE EMBEDDED ITEM AND CONCRETE REINFORCEMENT.
   d) THEY SHALL NOT SIGNIFICANTLY IMPAIR THE STRENGTH OF THE CONSTRUCTION. THE ENGINEER OF RECORD SHALL DETERMINE IF THE STRENGTH OF THE CONSTRUCTION HAS BEEN SIGNIFICANTLY IMPAIRED.
5. NO LIQUIDS, GAS, OR VAPOR, EXCEPT WATER NOT EXCEEDING 90 DEGREES FAHRENHEIT NOR 50 PSI, SHALL BE PLACED IN THE PIPES UNTIL THE CONCRETE HAS ATTAINED ITS DESIGN STRENGTH.
6. IN SOLID SLABS, CONDUITS AND/OR PIPING SHALL BE PLACED BETWEEN THE TOP AND BOTTOM REINFORCEMENT AT THE CENTERLINE OF THE SLAB. AT A MINIMUM, THEY SHALL BE LOCATED IN SUCH A MANNER AS TO MAINTAIN A MINIMUM OF 1-INCH CLEAR SPACE BETWEEN THE EMBEDDED ITEM AND PRIMARY REINFORCEMENT.
7. CONCRETE COVER FOR PIPES, CONDUITS, AND FITTINGS SHALL NOT BE LESS THAN 2-INCHES FOR CONCRETE EXPOSED TO EARTH, CONTAINED LIQUIDS, OR WEATHER, NOR LESS THAN 1-INCH FOR CONCRETE NOT EXPOSED TO CONTAINED LIQUIDS, WEATHER OR IN CONTACT WITH GROUND.
8. REINFORCEMENT WITH AN AREA NOT LESS THAN 0.002 TIMES THE AREA OF CONCRETE SECTION SHALL BE PROVIDED NORMAL TO THE CONDUIT AND/OR PIPING.
9. CONDUITS AND/OR PIPING SHALL BE SO FABRICATED AND INSTALLED THAT CUTTING, BENDING, OR DISPLACEMENT OF REINFORCEMENT FROM ITS PROPER LOCATION WILL NOT BE REQUIRED.
10. PIPES PASSING THROUGH WALLS OF A LIQUID - CONTAINING STRUCTURE SHALL INCLUDE AN INTEGRAL WATERSTOP.

RECORD DRAWING
THIS RECORD DRAWING HAS BEEN PREPARED FROM THE ORIGINAL CONTRACT DOCUMENTS SIGNED AND SEALED BY THE RESPONSIBLE ENGINEER OF RECORD. ADDITIONAL INFORMATION HAS BEEN PROVIDED BY OTHERS TO REPRESENT AS-CONSTRUCTED CONDITION AND IS SHOWN ON THESE RECORD DRAWINGS. THE RESPONSIBLE ENGINEER OF RECORD CANNOT VERIFY THE ACCURACY OF THE AS-CONSTRUCTED CONDITION INFORMATION REPRESENTED ON THE RECORD DRAWINGS.

0" 1" VERIFY SCALES
BAR IS ONE INCH
LONG ON FULL
SIZE DRAWING.
IF NOT ONE INCH
LONG ON THIS
DRAWING, ADJUST
SCALES ACCORDINGLY

TJC and ASSOCIATES, INC.

Woodard & Curran

REV	DATE	BY	APVD	DESCRIPTION
1				
2				
3				
4				
5				

DESIGNED	RKT
DRAWN	ADM
CHECKED	DMY

SUBMITTED: MARK TAKEMOTO
RMC PROJECT ENGINEER CE-64369

APPROVED: STEVE CLARY
RMC ENGINEER CE-30318

SAUSALITO · MARIN CITY SANITARY DISTRICT

TREATMENT AND WET WEATHER FLOW UPGRADE

HEADWORKS/EQ BASIN
PARTIAL PLAN EL 44.50 DETAIL & SECTION

DWG NO	S100-4B
SHEET NO	OF 226
PROJ NO	055-006
DATE	JULY 2022

FILENAME: 0055-006-S100-04B 9-19-22 12:03pm BeeVue | XREFS:| S-HEADWORKS-PLAN | X-StePlon | X-Topo Survey new | X-SMCSD-TBLK | X-Treatment Plant site plan |<<--

Last Saved By: BeeVue 9-19-22 12:03pm

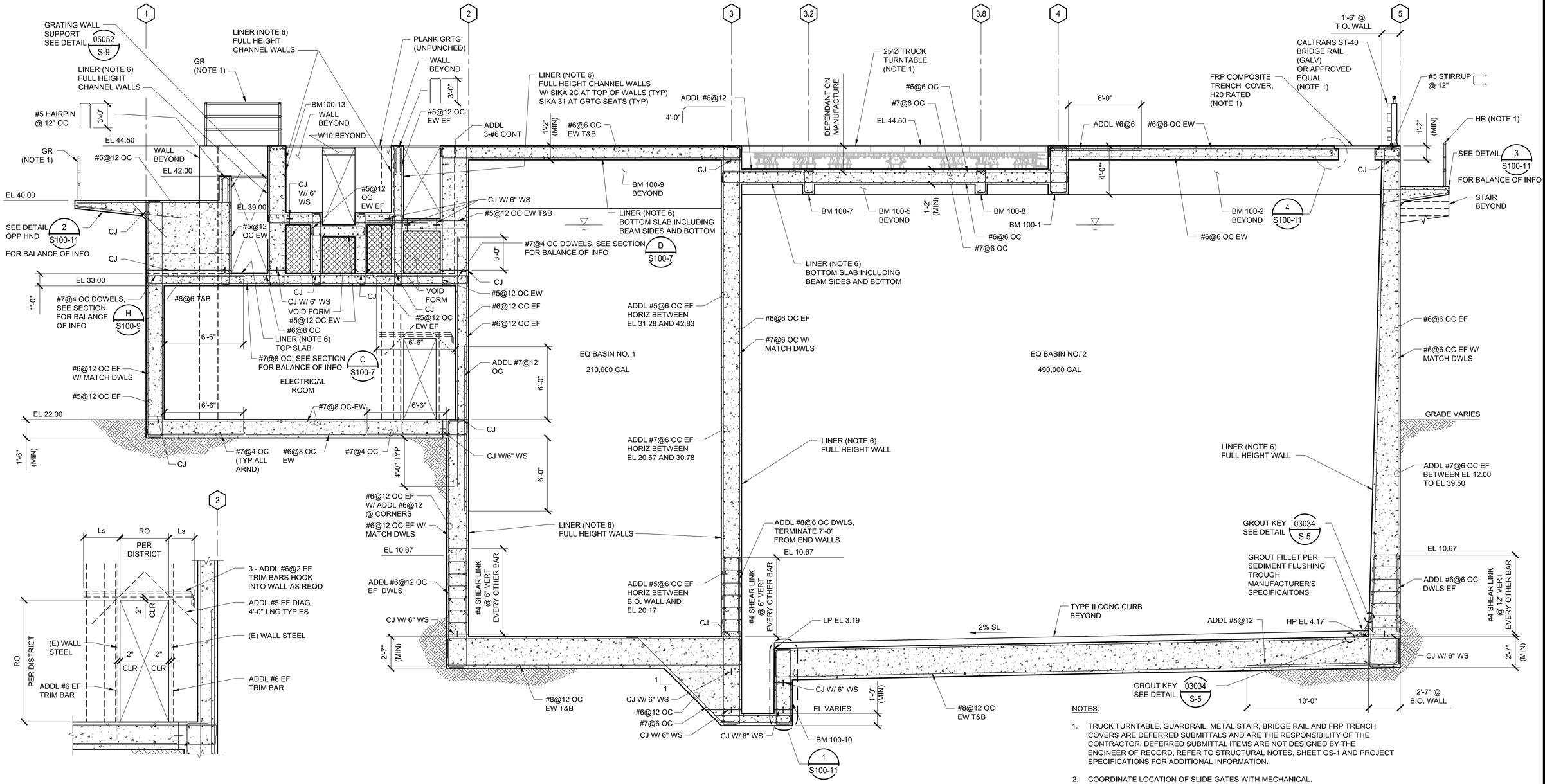

OPENING WALL COLUMN LINE B HEADWORKS VOID SPACE

SCALE: 3/8"=1'-0"

SECTION A

SCALE: 1/4"=1'-0" S100-1,2&3

NOTES:

1. TRUCK TURNTABLE, GUARDRAIL, METAL STAIR, BRIDGE RAIL AND FRP TRENCH COVERS ARE DEFERRED SUBMITTALS AND ARE THE RESPONSIBILITY OF THE CONTRACTOR. DEFERRED SUBMITTAL ITEMS ARE NOT DESIGNED BY THE ENGINEER OF RECORD, REFER TO STRUCTURAL NOTES, SHEET GS-1 AND PROJECT SPECIFICATIONS FOR ADDITIONAL INFORMATION.
2. COORDINATE LOCATION OF SLIDE GATES WITH MECHANICAL.
3. ALL CORNERS AND INTERSECTIONS SHALL HAVE "ADDED" WALL REINFORCEMENT AS SHOWN ON STANDARD DETAILS 3001 & 3002.
4. SEE ARCHITECTURAL DRAWINGS FOR EXTENT OF TEXTURED CONCRETE WALL AREAS. COORDINATE WALL REINFORCEMENT WITH STANDARD DETAIL 03040 TO ENSURE PROPER CONCRETE COVER.
5. GRADE ELEVATIONS ARE FOR REFERENCE ONLY. SEE CIVIL DRAWINGS FOR FINISHED ELEVATIONS.
6. APPLY PVC LINING SYSTEM AS INDICATED. REFER TO TECHNICAL SPECIFICATION FOR ADDITIONAL INFORMATION.

RECORD DRAWING
THIS RECORD DRAWING HAS BEEN PREPARED FROM THE ORIGINAL CONTRACT DOCUMENTS SIGNED AND SEALED BY THE RESPONSIBLE ENGINEER OF RECORD. ADDITIONAL INFORMATION HAS BEEN PROVIDED BY OTHERS TO REPRESENT AS-CONSTRUCTED CONDITION AND IS SHOWN ON THESE RECORD DRAWINGS. THE RESPONSIBLE ENGINEER OF RECORD CANNOT VERIFY THE ACCURACY OF THE AS-CONSTRUCTED CONDITION INFORMATION REPRESENTED ON THE RECORD DRAWINGS.

0" 1" VERIFY SCALES BAR IS ONE INCH LONG ON FULL SIZE DRAWING. IF NOT ONE INCH LONG ON THIS DRAWING, ADJUST SCALES ACCORDINGLY

TJC and ASSOCIATES, INC.

Woodard & Curran

REV	DATE	BY	APVD	DESCRIPTION

DESIGNED	RKT
DRAWN	ADM
CHECKED	DMY

SUBMITTED: MARK TAKEMOTO
RMC PROJECT ENGINEER CE-64369

APPROVED: STEVE CLARY
RMC ENGINEER CE-30318

SAUSALITO · MARIN CITY SANITARY DISTRICT

TREATMENT AND WET WEATHER FLOW UPGRADE

HEADWORKS/EQ BASIN SECTION A

DWG NO	S100-5
SHEET NO	OF 226
PROJ NO	055-006
DATE	JULY 2022

FILENAME: 0055-006-S100-05 9-19-22 01:18pm BeeVue || XREFS: | X-SMCSD-TBLK | S-HEADWORKS-SECT |<<--

Last Saved By: BeeVue 9-19-22 01:18pm

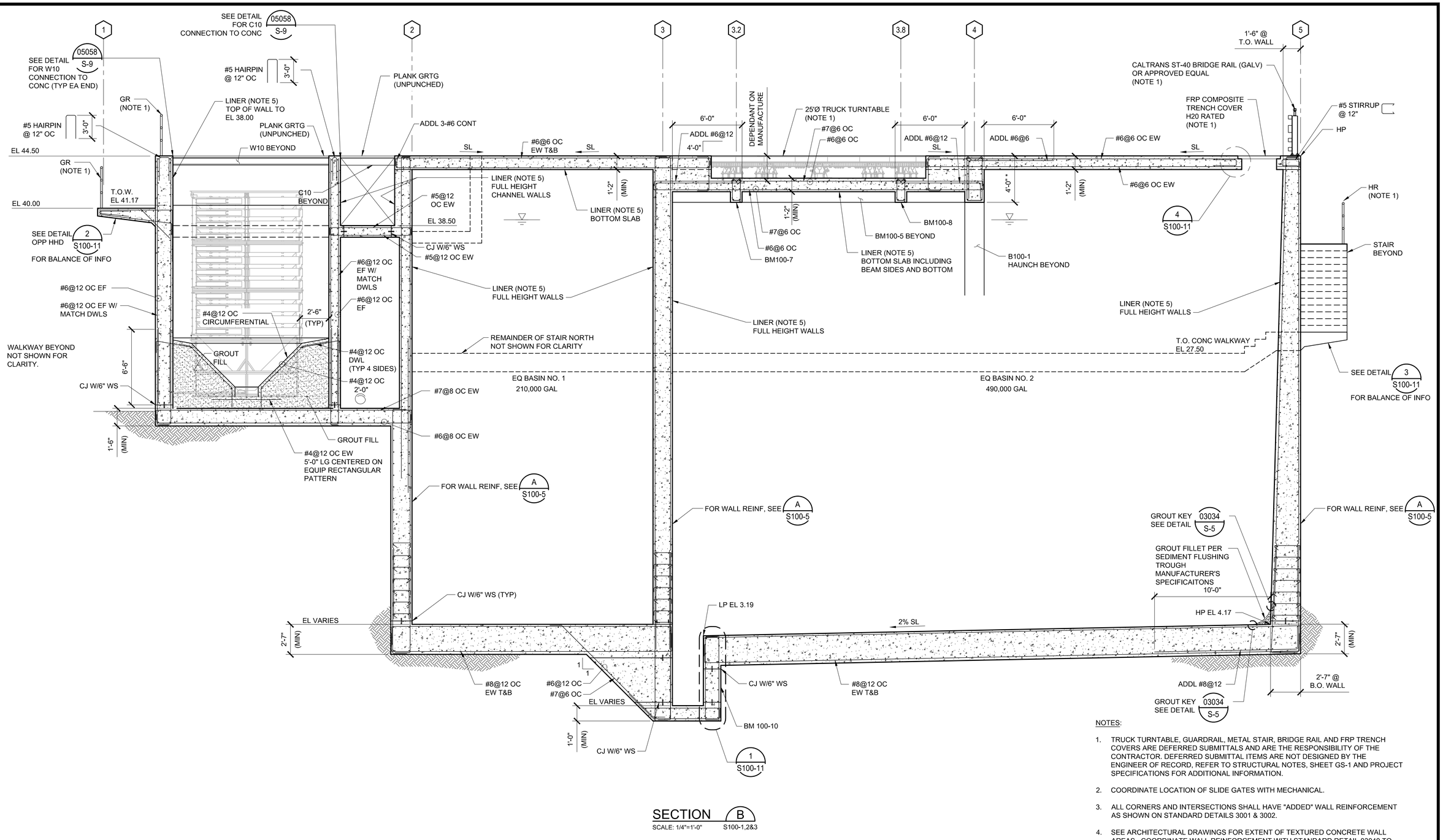

SECTION B

SCALE: 1/4"=1'-0" S100-1,2&3

NOTES:

1. TRUCK TURNTABLE, GUARDRAIL, METAL STAIR, BRIDGE RAIL AND FRP TRENCH COVERS ARE DEFERRED SUBMITTALS AND ARE THE RESPONSIBILITY OF THE CONTRACTOR. DEFERRED SUBMITTAL ITEMS ARE NOT DESIGNED BY THE ENGINEER OF RECORD, REFER TO STRUCTURAL NOTES, SHEET GS-1 AND PROJECT SPECIFICATIONS FOR ADDITIONAL INFORMATION.
2. COORDINATE LOCATION OF SLIDE GATES WITH MECHANICAL.
3. ALL CORNERS AND INTERSECTIONS SHALL HAVE "ADDED" WALL REINFORCEMENT AS SHOWN ON STANDARD DETAILS 3001 & 3002.
4. SEE ARCHITECTURAL DRAWINGS FOR EXTENT OF TEXTURED CONCRETE WALL AREAS. COORDINATE WALL REINFORCEMENT WITH STANDARD DETAIL 03040 TO ENSURE PROPER CONCRETE COVER.
5. APPLY PVC LINING SYSTEM AS INDICATED. REFER TO TECHNICAL SPECIFICATION FOR ADDITIONAL INFORMATION.

FILENAME: 0055-006-S100-06 9-19-22 01:18pm BeeVue || XREFS:| X-SMCSD-TBLK | S-HEADWORKS-SECT |<<--

RECORD DRAWING
THIS RECORD DRAWING HAS BEEN PREPARED FROM THE ORIGINAL CONTRACT DOCUMENTS SIGNED AND SEALED BY THE RESPONSIBLE ENGINEER OF RECORD. ADDITIONAL INFORMATION HAS BEEN PROVIDED BY OTHERS TO REPRESENT AS-CONSTRUCTED CONDITION AND IS SHOWN ON THESE RECORD DRAWINGS. THE RESPONSIBLE ENGINEER OF RECORD CANNOT VERIFY THE ACCURACY OF THE AS-CONSTRUCTED CONDITION INFORMATION REPRESENTED ON THE RECORD DRAWINGS.

0" 1" VERIFY SCALES BAR IS ONE INCH LONG ON FULL SIZE DRAWING. IF NOT ONE INCH LONG ON THIS DRAWING, ADJUST SCALES ACCORDINGLY

TJC by AMGCIVIL INC.

Woodard & Curran

REV	DATE	BY	APVD	DESCRIPTION

DESIGNED RKT
DRAWN ADM
CHECKED DMY

SUBMITTED: MARK TAKEMOTO
RMC PROJECT ENGINEER CE-64369
APPROVED: STEVE CLARY
RMC ENGINEER CE-30318

SAUSALITO · MARIN CITY SANITARY DISTRICT

TREATMENT AND WET WEATHER FLOW UPGRADE

HEADWORKS/EQ BASIN SECTION B

DWG NO	S100-6
SHEET NO	OF 226
PROJ NO	055-006
DATE	JULY 2022

Last Saved By: BeeVue 9-19-22 01:17pm

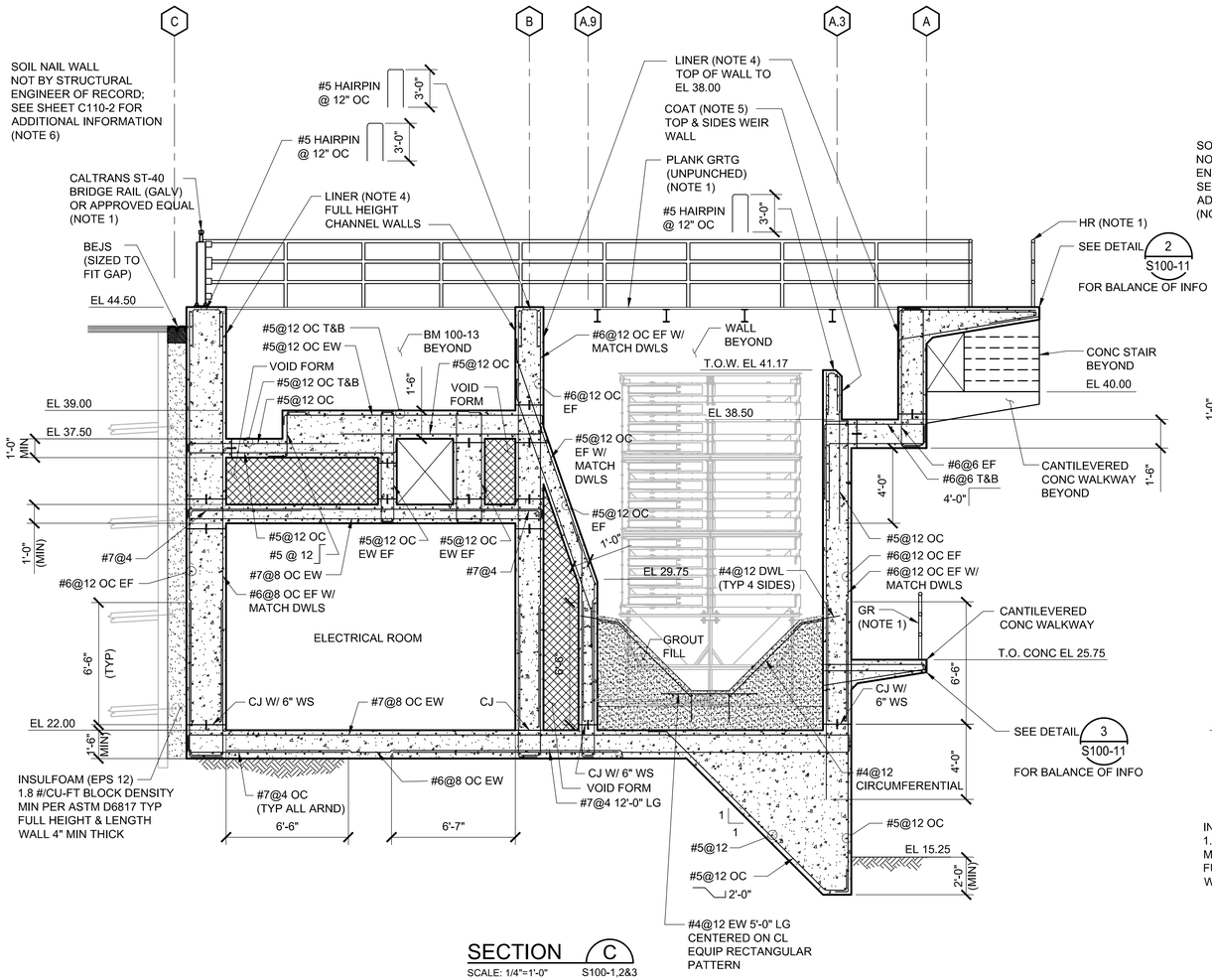

SECTION C

SCALE: 1/4"=1'-0" S100-1,2&3

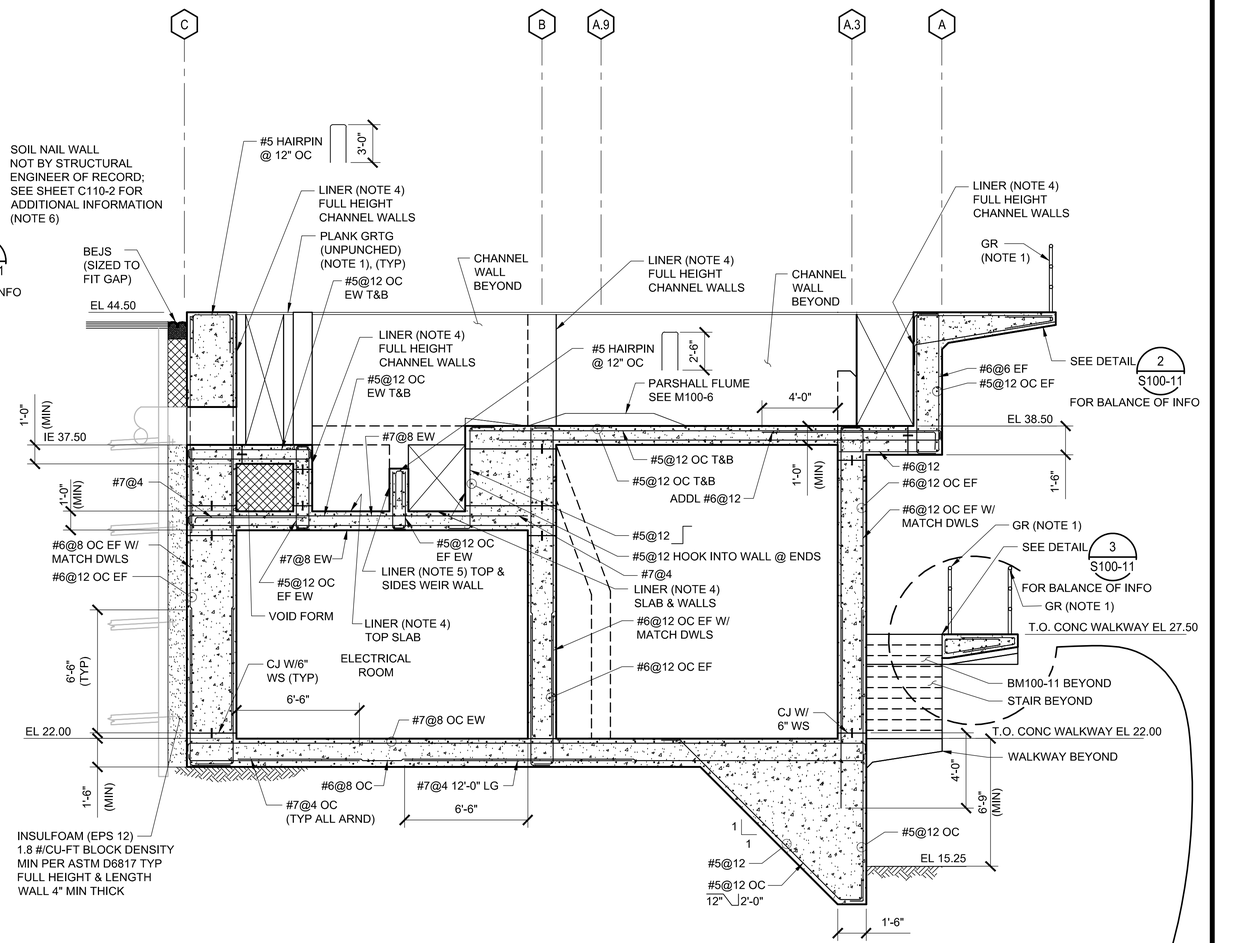

SECTION D

SCALE: 1/4"=1'-0" S100-1,2&3

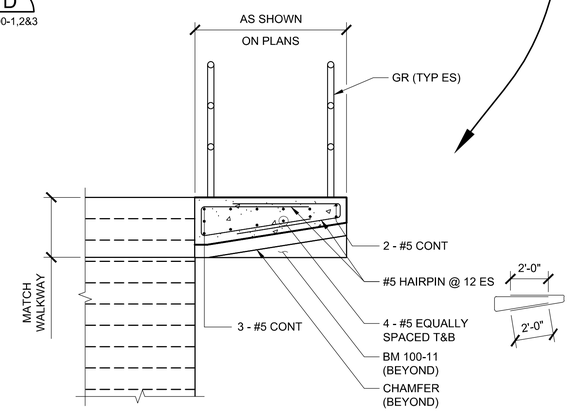

NOTES:

1. GUARDRAIL AND BRIDGE RAIL ARE DEFERRED SUBMITTAL AND ARE THE RESPONSIBILITY OF THE CONTRACTOR. DEFERRED SUBMITTAL ITEMS ARE NOT DESIGNED BY THE ENGINEER OF RECORD, REFER TO STRUCTURAL NOTES, SHEET GS-1 AND PROJECT SPECIFICATIONS FOR ADDITIONAL INFORMATION.
2. COORDINATE LOCATION OF SLIDE GATES WITH MECHANICAL.
3. ALL CORNERS AND INTERSECTIONS SHALL HAVE "ADDED" WALL REINFORCEMENT AS SHOWN ON STANDARD DETAILS 3001 & 3002.
4. APPLY PVC LINING SYSTEM AS INDICATED. REFER TO TECHNICAL SPECIFICATION FOR ADDITIONAL INFORMATION.
5. APPLY COATING SYSTEM (P100 OR APPROVED EQUAL) AS INDICATED. REFER TO TECHNICAL SPECIFICATION FOR ADDITIONAL INFORMATION.
6. ANCHOR DOWELS/ACHORAGE DEVICE SHALL NOT BE EMBEDDED WITHIN STRUCTURES CONCRETE.

RECORD DRAWING
THIS RECORD DRAWING HAS BEEN PREPARED FROM THE ORIGINAL CONTRACT DOCUMENTS SIGNED AND SEALED BY THE RESPONSIBLE ENGINEER OF RECORD. ADDITIONAL INFORMATION HAS BEEN PROVIDED BY OTHERS TO REPRESENT AS-CONSTRUCTED CONDITION AND IS SHOWN ON THESE RECORD DRAWINGS. THE RESPONSIBLE ENGINEER OF RECORD CANNOT VERIFY THE ACCURACY OF THE AS-CONSTRUCTED CONDITION INFORMATION REPRESENTED ON THE RECORD DRAWINGS.

0" 1" VERIFY SCALES
BAR IS ONE INCH
LONG ON FULL
SIZE DRAWING.
IF NOT ONE INCH
LONG ON THIS
DRAWING, ADJUST
SCALES ACCORDINGLY

TJC and ASSOCIATES, INC.

Woodard & Curran

REV	DATE	BY	APVD	DESCRIPTION
1				
2				
3				
4				
5				

DESIGNED	RKT
DRAWN	ADM
CHECKED	DMY

SUBMITTED: MARK TAKEMOTO
RMC PROJECT ENGINEER CE-64369

APPROVED: STEVE CLARY
RMC ENGINEER CE-30318

SAUSALITO • MARIN CITY SANITARY DISTRICT

TREATMENT AND WET WEATHER FLOW UPGRADE

HEADWORKS/EQ BASIN SECTIONS C & D

DWG NO	S100-7
SHEET NO	OF 226
PROJ NO	055-006
DATE	JULY 2022

FILENAME: 0055-006-S100-07 9-19-22 01:17pm BeeVue || XREFS:| X-SMCSD-TBLK | S-HEADWORKS-SECT |<<--

Last Saved By: BeeVue 9-19-22 01:17pm

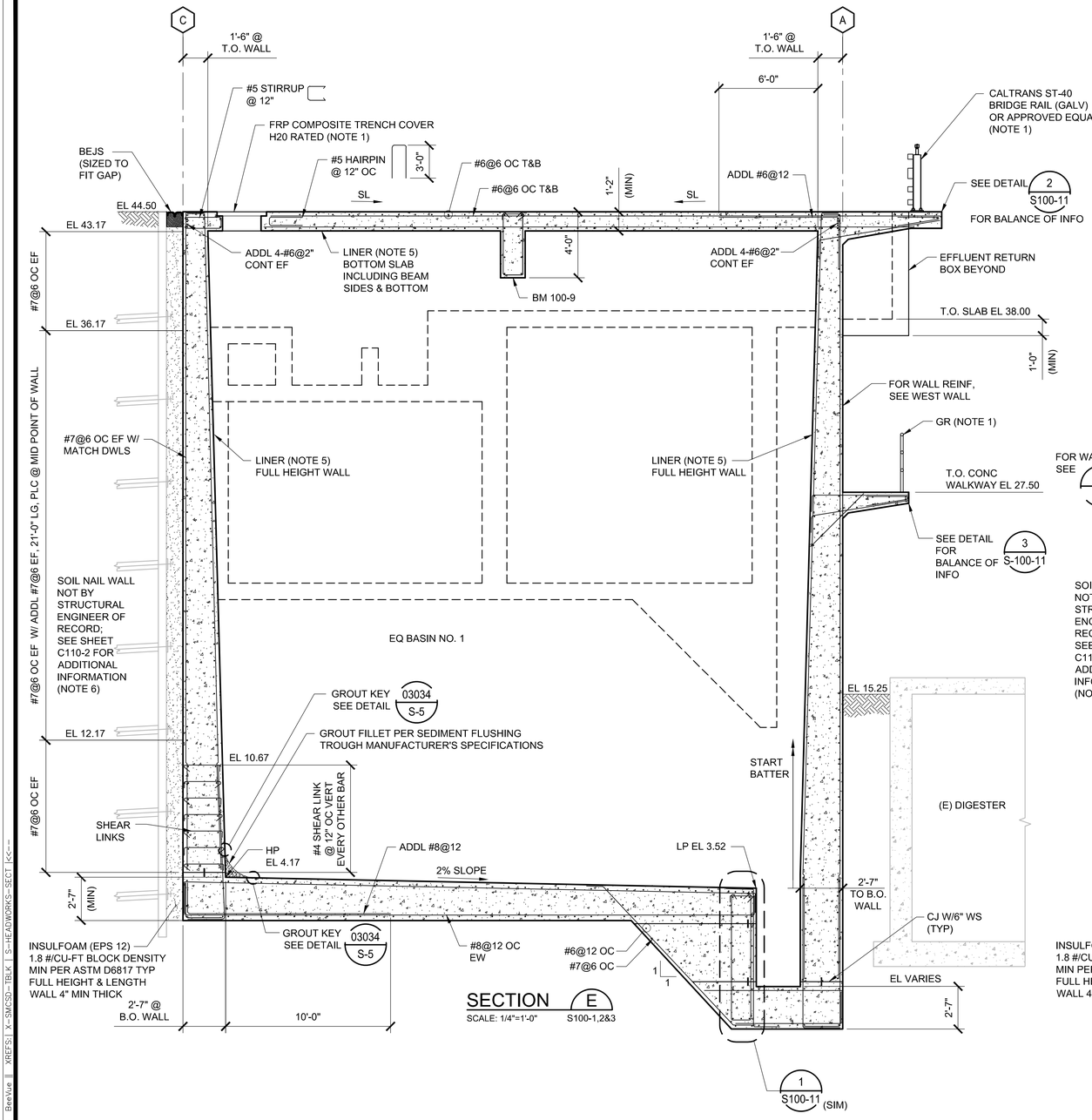

SECTION E
SCALE: 1/4"=1'-0" S100-1,2&3

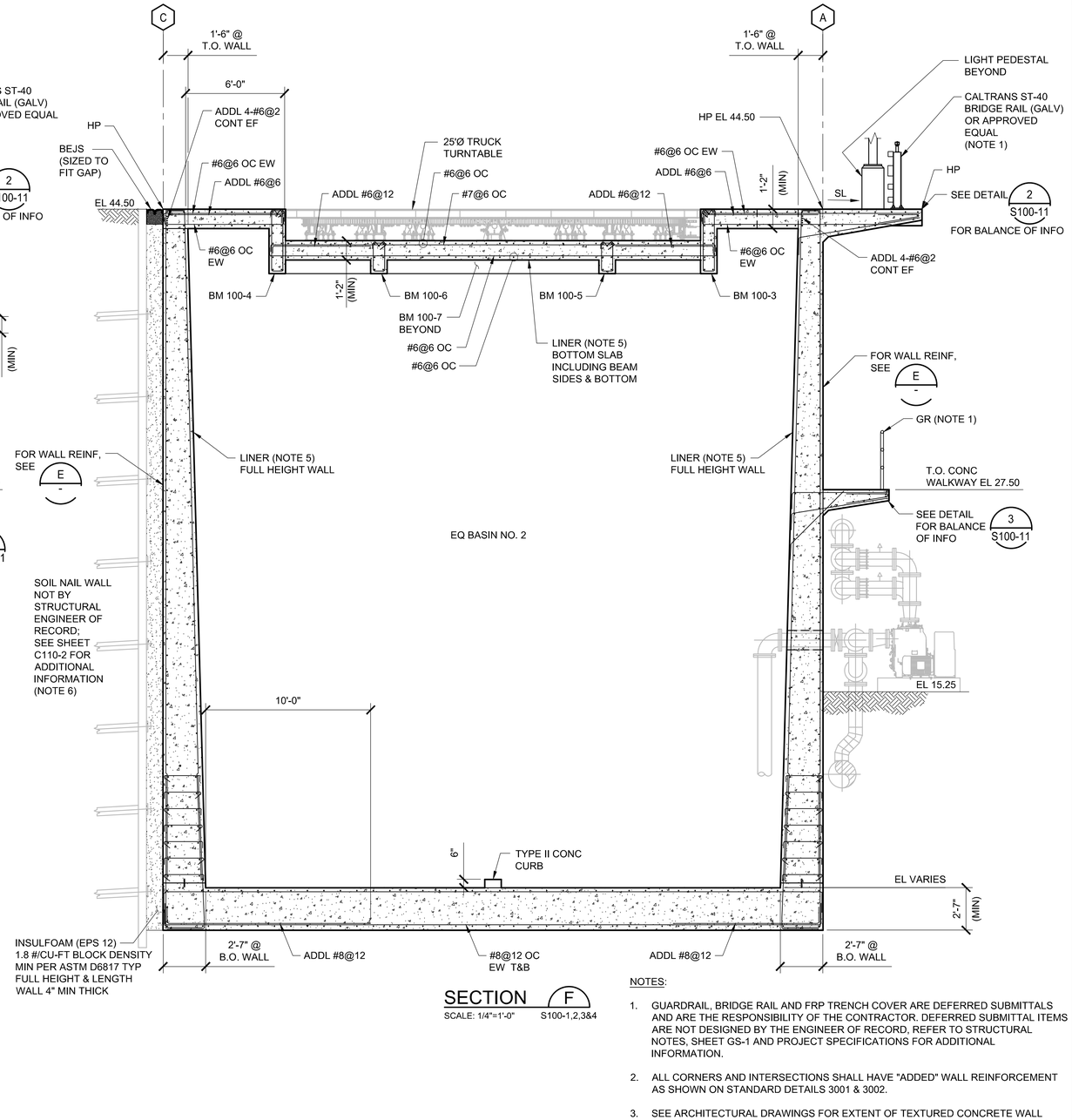

SECTION F
SCALE: 1/4"=1'-0" S100-1,2,3&4

NOTES:

1. GUARDRAIL, BRIDGE RAIL AND FRP TRENCH COVER ARE DEFERRED SUBMITTALS AND ARE THE RESPONSIBILITY OF THE CONTRACTOR. DEFERRED SUBMITTAL ITEMS ARE NOT DESIGNED BY THE ENGINEER OF RECORD, REFER TO STRUCTURAL NOTES, SHEET GS-1 AND PROJECT SPECIFICATIONS FOR ADDITIONAL INFORMATION.
2. ALL CORNERS AND INTERSECTIONS SHALL HAVE "ADDED" WALL REINFORCEMENT AS SHOWN ON STANDARD DETAILS 3001 & 3002.
3. SEE ARCHITECTURAL DRAWINGS FOR EXTENT OF TEXTURED CONCRETE WALL AREAS. COORDINATE WALL REINFORCEMENT WITH STANDARD DETAIL 03040 TO ENSURE PROPER CONCRETE COVER.
4. GRADE ELEVATIONS ARE FOR REFERENCE ONLY. SEE CIVIL DRAWINGS FOR FINISHED ELEVATIONS.
5. APPLY PVC LINING SYSTEM AS INDICATED. REFER TO TECHNICAL SPECIFICATION FOR ADDITIONAL INFORMATION.
6. ANCHOR DOWELS/ACHORAGE DEVICE SHALL NOT BE EMBEDDED WITHIN STRUCTURES CONCRETE.

RECORD DRAWING
THIS RECORD DRAWING HAS BEEN PREPARED FROM THE ORIGINAL CONTRACT DOCUMENTS SIGNED AND SEALED BY THE RESPONSIBLE ENGINEER OF RECORD. ADDITIONAL INFORMATION HAS BEEN PROVIDED BY OTHERS TO REPRESENT AS-CONSTRUCTED CONDITION AND IS SHOWN ON THESE RECORD DRAWINGS. THE RESPONSIBLE ENGINEER OF RECORD CANNOT VERIFY THE ACCURACY OF THE AS-CONSTRUCTED CONDITION INFORMATION REPRESENTED ON THE RECORD DRAWINGS.

0" — 1" VERIFY SCALES BAR IS ONE INCH LONG ON FULL SIZE DRAWING. IF NOT ONE INCH LONG ON THIS DRAWING, ADJUST SCALES ACCORDINGLY

TJC and ASSOCIATES, INC.

Woodard & Curran

REV	DATE	BY	APVD	DESCRIPTION

DESIGNED	RKT
DRAWN	ADM
CHECKED	DMY

SUBMITTED: MARK TAKEMOTO
RMC PROJECT ENGINEER CE-64369

APPROVED: STEVE CLARY
RMC ENGINEER CE-30318

SAUSALITO · MARIN CITY SANITARY DISTRICT

TREATMENT AND WET WEATHER FLOW UPGRADE

HEADWORKS/EQ BASIN SECTIONS E & F

DWG NO	S100-8
SHEET NO	OF 226
PROJ NO	055-006
DATE	JULY 2022

FILENAME: 0055-006-S100-08 9-19-22 01:16pm BeeVue || XREFS:| X-SMCSD-TBLK | S-HEADWORKS-SECT |<<--

Last Saved By: BeeVue 9-19-22 01:16pm

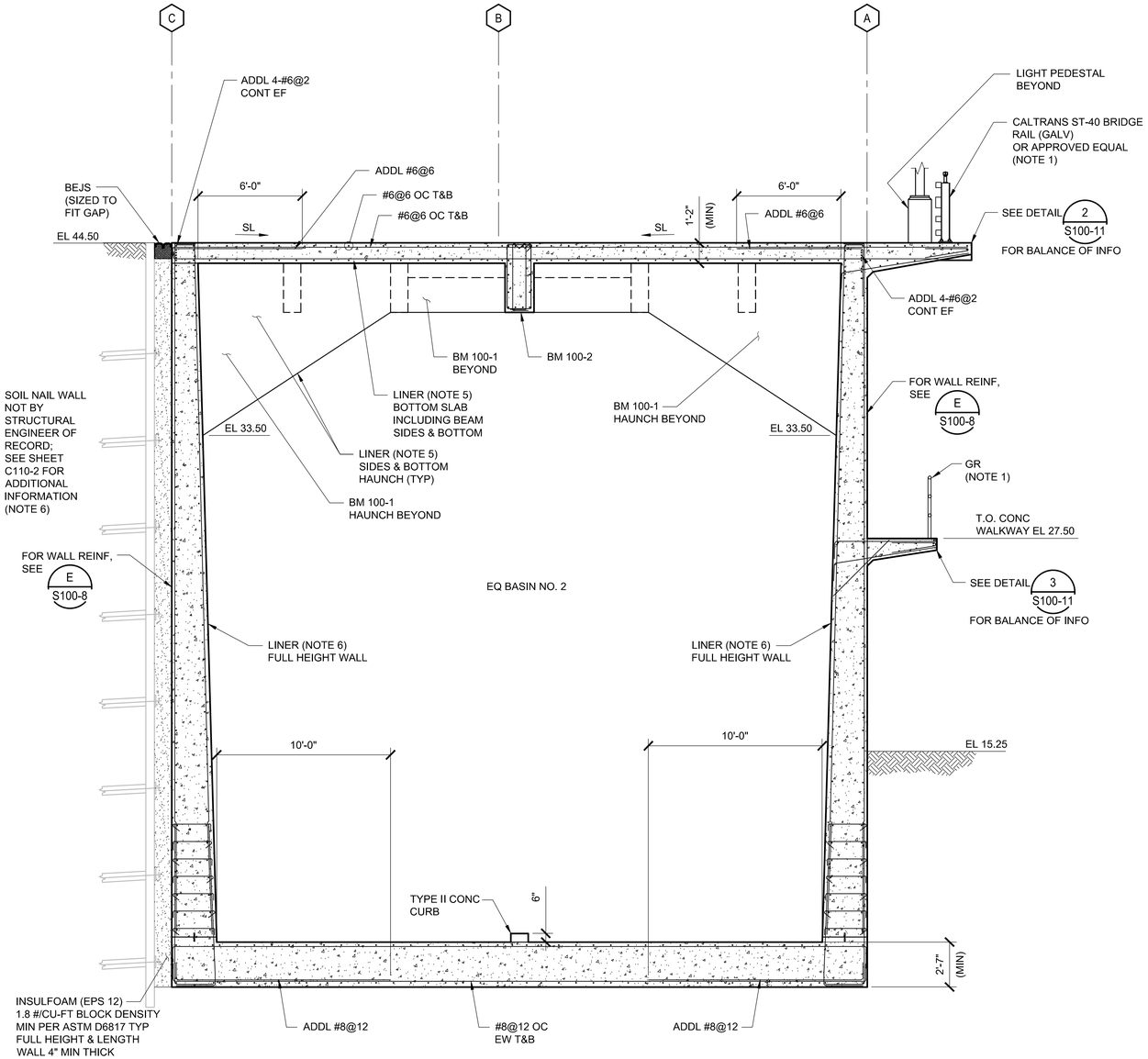

SECTION G
SCALE: 1/4"=1'-0" S100-1,2&3

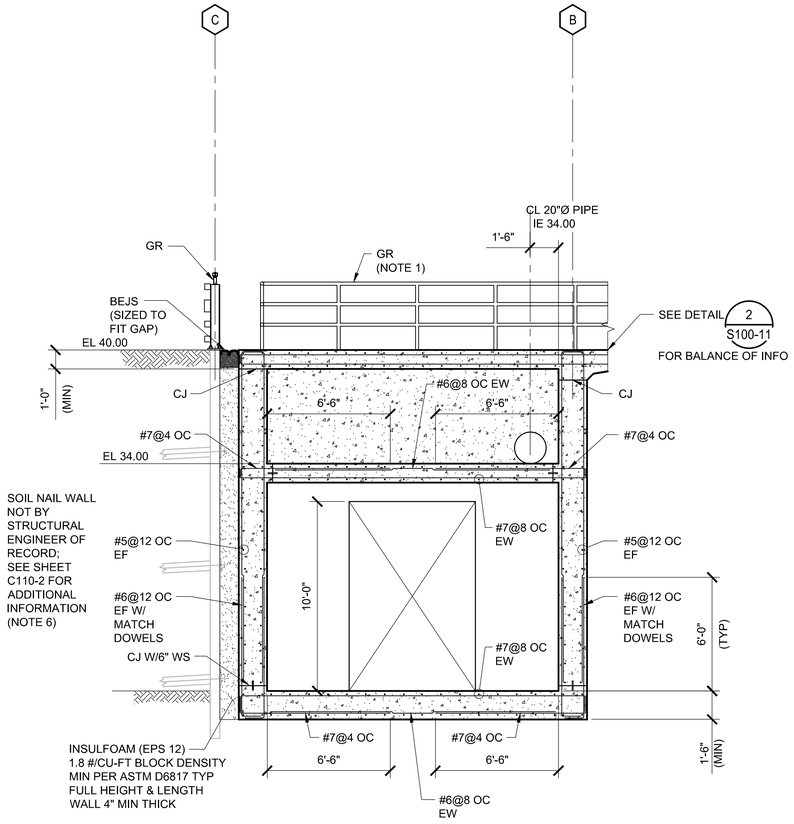

SECTION H
SCALE: 1/4"=1'-0" S100-1,2&3

NOTES:

1. GUARDRAIL AND BRIDGE RAIL ARE DEFERRED SUBMITTALS AND ARE THE RESPONSIBILITY OF THE CONTRACTOR. DEFERRED SUBMITTAL ITEMS ARE NOT DESIGNED BY THE ENGINEER OF RECORD, REFER TO STRUCTURAL NOTES, SHEET GS-1 AND PROJECT SPECIFICATIONS FOR ADDITIONAL INFORMATION.
2. ALL CORNERS AND INTERSECTIONS SHALL HAVE "ADDED" WALL REINFORCEMENT AS SHOWN ON STANDARD DETAILS 3001 & 3002.
3. SEE ARCHITECTURAL DRAWINGS FOR EXTENT OF TEXTURED CONCRETE WALL AREAS. COORDINATE WALL REINFORCEMENT WITH STANDARD DETAIL 03040 TO ENSURE PROPER CONCRETE COVER.
4. GRADE ELEVATIONS ARE FOR REFERENCE ONLY. SEE CIVIL DRAWINGS FOR FINISHED ELEVATIONS.
5. APPLY PVC LINING SYSTEM AS INDICATED. REFER TO TECHNICAL SPECIFICATION FOR ADDITIONAL INFORMATION.
6. ANCHOR DOWELS/ACHORAGE DEVICE SHALL NOT BE EMBEDDED WITHIN STRUCTURES CONCRETE.

RECORD DRAWING
THIS RECORD DRAWING HAS BEEN PREPARED FROM THE ORIGINAL CONTRACT DOCUMENTS SIGNED AND SEALED BY THE RESPONSIBLE ENGINEER OF RECORD. ADDITIONAL INFORMATION HAS BEEN PROVIDED BY OTHERS TO REPRESENT AS-CONSTRUCTED CONDITION AND IS SHOWN ON THESE RECORD DRAWINGS. THE RESPONSIBLE ENGINEER OF RECORD CANNOT VERIFY THE ACCURACY OF THE AS-CONSTRUCTED CONDITION INFORMATION REPRESENTED ON THE RECORD DRAWINGS.

0" 1"
VERIFY SCALES
BAR IS ONE INCH
LONG ON FULL
SIZE DRAWING.
IF NOT ONE INCH
LONG ON THIS
DRAWING, ADJUST
SCALES ACCORDINGLY

TJC and ASSOCIATES, INC.

Woodard & Curran

REV	DATE	BY	APVD	DESCRIPTION

DESIGNED	RKT
DRAWN	ADM
CHECKED	DMY

SUBMITTED: MARK TAKEMOTO
RMC PROJECT ENGINEER CE-64369

APPROVED: STEVE CLARY
RMC ENGINEER CE-30318

SAUSALITO · MARIN CITY SANITARY DISTRICT

TREATMENT AND WET WEATHER FLOW UPGRADE

HEADWORKS/EQ BASIN
SECTIONS G & H

DWG NO	S100-9
SHEET NO	OF 226
PROJ NO	055-006
DATE	JULY 2022

FILENAME: 055-006-S100-09 9-19-22 01:16pm BeeVue || XREFS:| X-SMCSD-TBLK | S-HEADWORKS-SECT |<<--

Last Saved By: BeeVue 9-01-21 09:49am

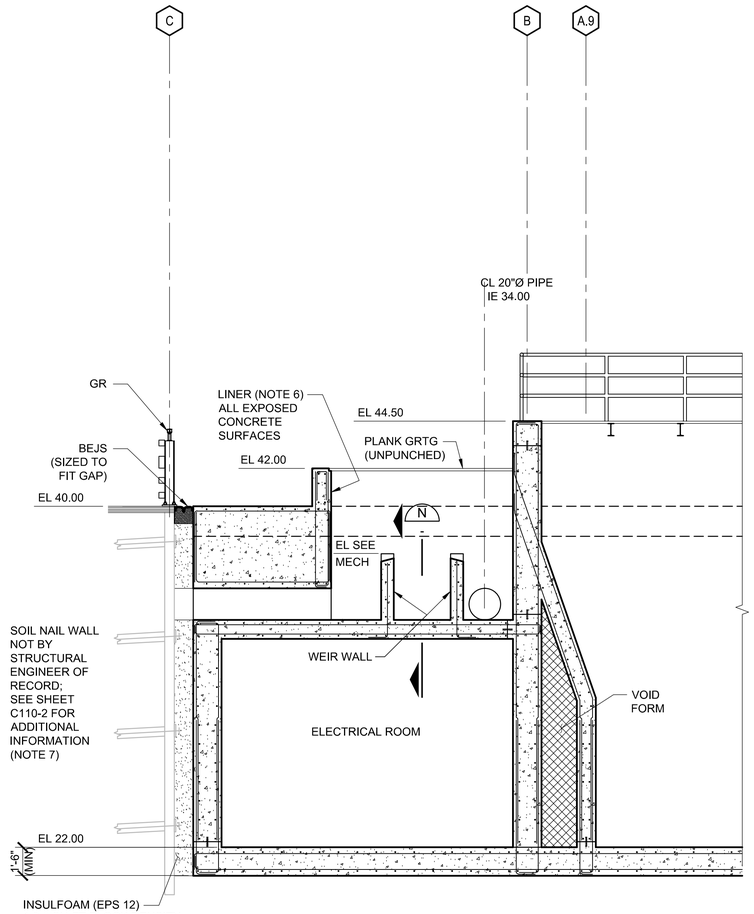

NOTE:

SEE SECTION C / S100-7 FOR BALANCE OF INFO.

SECTION J

SCALE: 1/4"=1'-0" S100-2,3&4

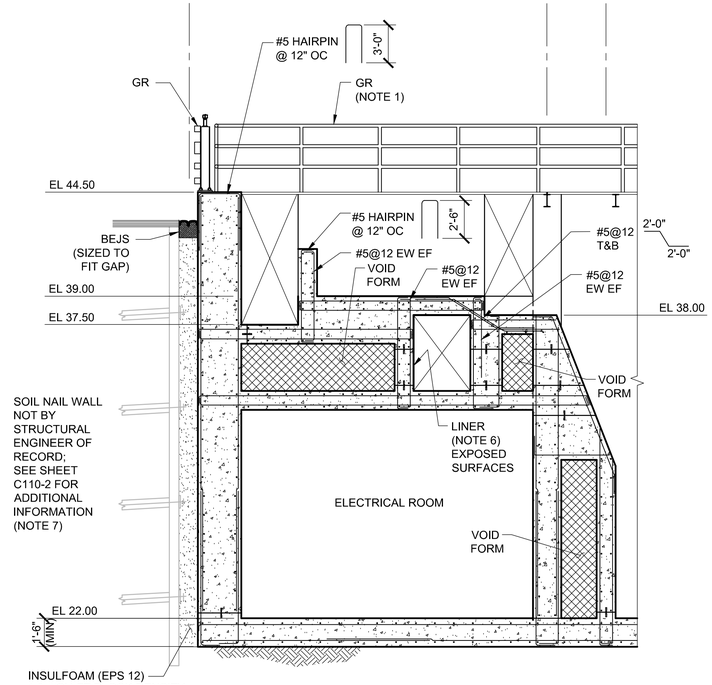

NOTE:

SEE SECTION C / S100-7 FOR BALANCE OF INFO.

SECTION K

SCALE: 1/4"=1'-0" S100-2,3&4

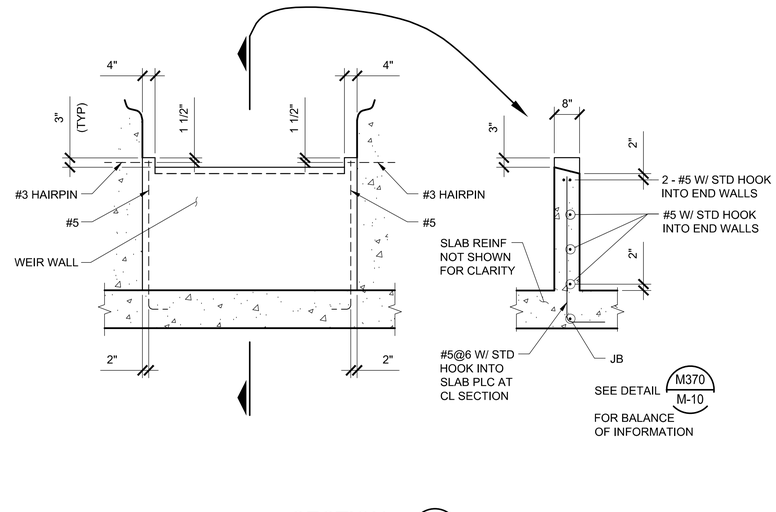

SECTION N

SCALE: 1/2"=1'-0" -

NOTES:

1. GUARDRAIL AND BRIDGE RAIL ARE DEFERRED SUBMITTALS AND ARE THE RESPONSIBILITY OF THE CONTRACTOR. DEFERRED SUBMITTAL ITEMS ARE NOT DESIGNED BY THE ENGINEER OF RECORD, REFER TO STRUCTURAL NOTES, SHEET GS-1 AND PROJECT SPECIFICATIONS FOR ADDITIONAL INFORMATION.
2. COORDINATE LOCATION OF SLIDE GATES WITH MECHANICAL.
3. ALL CORNERS AND INTERSECTIONS SHALL HAVE "ADDED" WALL REINFORCEMENT AS SHOWN ON STANDARD DETAILS 3001 & 3002.
4. SEE ARCHITECTURAL DRAWINGS FOR EXTENT OF TEXTURED CONCRETE WALL AREAS. COORDINATE WALL REINFORCEMENT WITH STANDARD DETAIL 03040 TO ENSURE PROPER CONCRETE COVER.
5. GRADE ELEVATIONS ARE FOR REFERENCE ONLY. SEE CIVIL DRAWINGS FOR FINISHED ELEVATIONS.
6. APPLY PVC LINING SYSTEM AS INDICATED. REFER TO TECHNICAL SPECIFICATION FOR ADDITIONAL INFORMATION.
7. ANCHOR DOWELS/ACHORAGE DEVICE SHALL NOT BE EMBEDDED WITHIN STRUCTURES CONCRETE.

RECORD DRAWING
THIS RECORD DRAWING HAS BEEN PREPARED FROM THE ORIGINAL CONTRACT DOCUMENTS SIGNED AND SEALED BY THE RESPONSIBLE ENGINEER OF RECORD. ADDITIONAL INFORMATION HAS BEEN PROVIDED BY OTHERS TO REPRESENT AS-CONSTRUCTED CONDITION AND IS SHOWN ON THESE RECORD DRAWINGS. THE RESPONSIBLE ENGINEER OF RECORD CANNOT VERIFY THE ACCURACY OF THE AS-CONSTRUCTED CONDITION INFORMATION REPRESENTED ON THE RECORD DRAWINGS.

0" — 1" VERIFY SCALES
BAR IS ONE INCH LONG ON FULL SIZE DRAWING. IF NOT ONE INCH LONG ON THIS DRAWING, ADJUST SCALES ACCORDINGLY

TJC and ASSOCIATES, INC.

Woodard & Curran

REV	DATE	BY	APVD	DESCRIPTION

DESIGNED	RKT
DRAWN	ADM
CHECKED	DMY

SUBMITTED: MARK TAKEMOTO, RMC PROJECT ENGINEER CE-64369

APPROVED: STEVE CLARY, RMC ENGINEER CE-30318

SAUSALITO · MARIN CITY SANITARY DISTRICT

TREATMENT AND WET WEATHER FLOW UPGRADE

HEADWORKS/EQ BASIN
SECTIONS J & K

DWG NO	S100-10
SHEET NO	OF 226
PROJ NO	055-006
DATE	JULY 2022

FILENAME: 055-006-S100-10 9-19-22 01:15pm BeeVue || XREFS: X-SMCSD-TBLK | S-HEADWORKS-SECT
Last Saved By: BeeVue 9-19-22 01:15pm

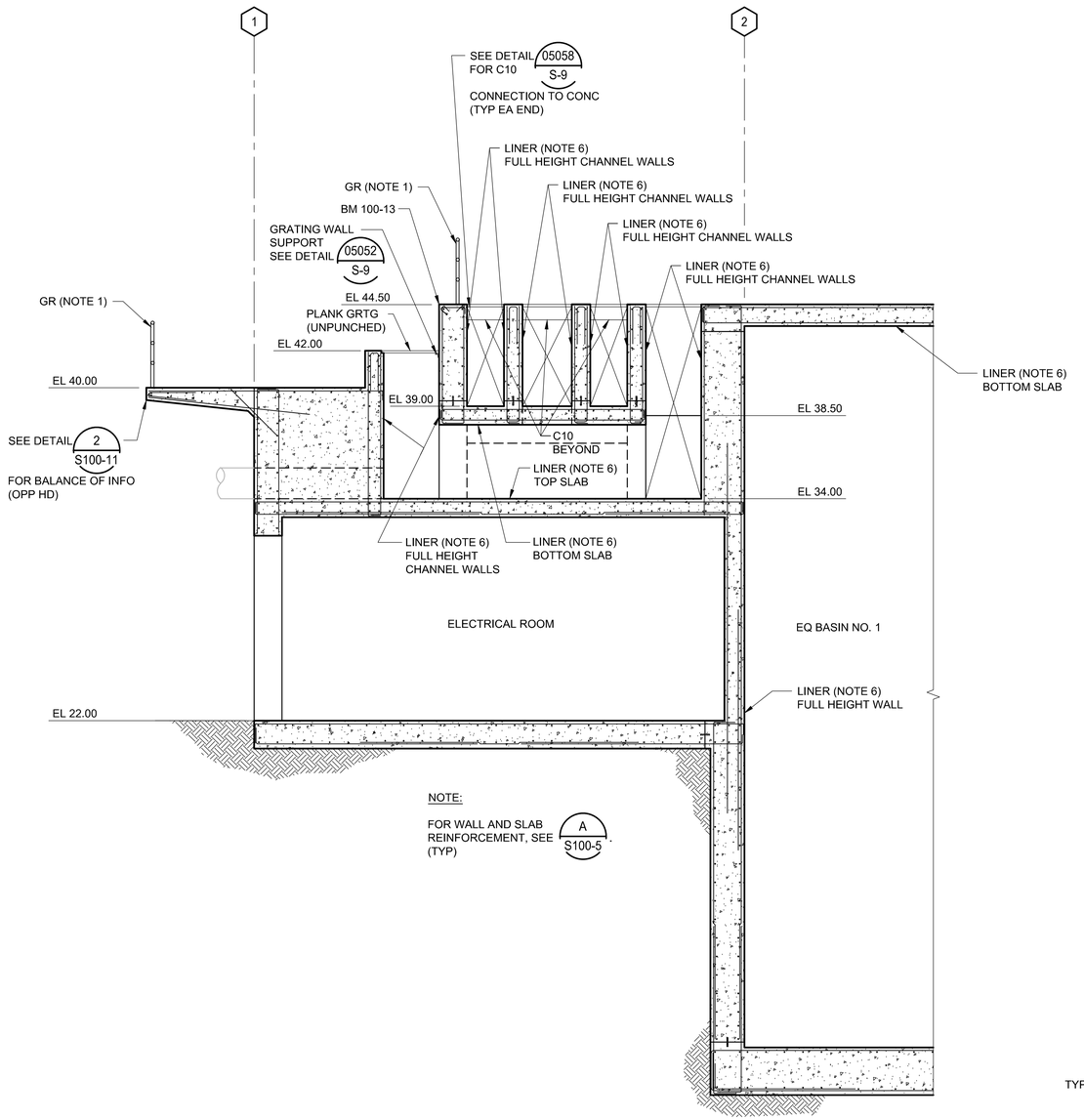

NOTE:

FOR WALL AND SLAB REINFORCEMENT, SEE (A / S100-5) (TYP).

SECTION L

SCALE: 1/4"=1'-0" S100-2,3&4

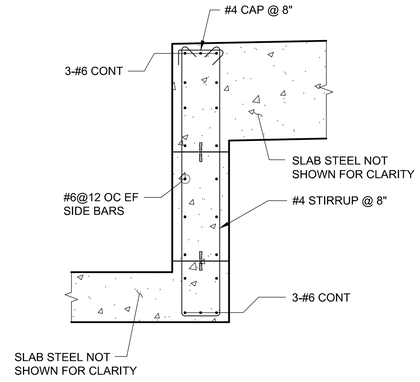

DETAIL 1

SCALE: 1/2"=1'-0" VAR

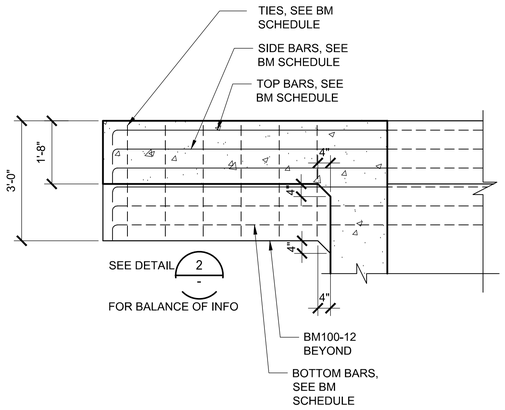

DETAIL M

SCALE: 1/2"=1'-0" VAR

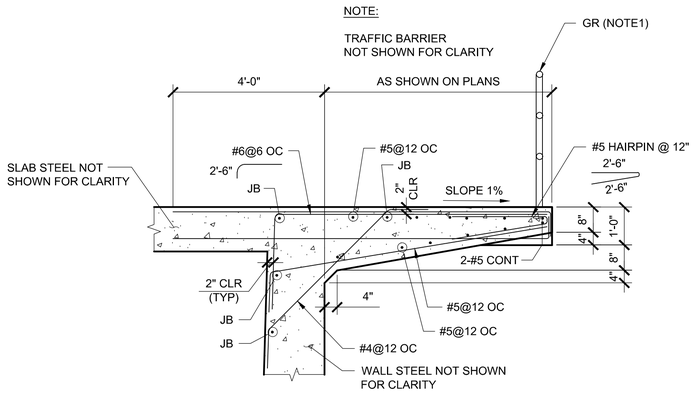

NOTE:

AT CONTRACTOR'S OPTION MAY SUBSTITUTE FORM SAVERS IN LIEU OF DOWELS.

DETAIL 2

SCALE: 1/2"=1'-0" VAR

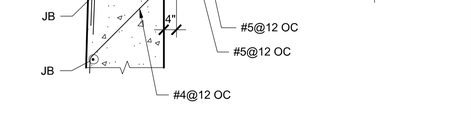

NOTE:

AT CONTRACTOR'S OPTION MAY SUBSTITUTE FORM SAVERS IN LIEU OF DOWELS.

DETAIL 3

SCALE: 1/2"=1'-0" VAR

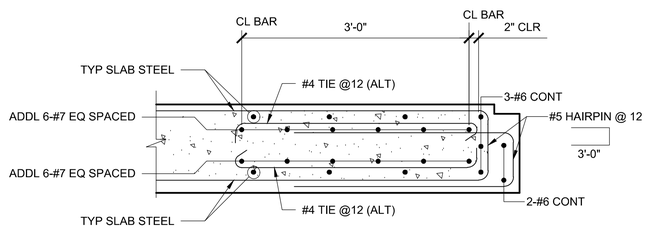

DETAIL 4

SCALE: 1/2"=1'-0" VAR

NOTES:

1. GUARDRAIL AND BRIDGE RAIL ARE DEFERRED SUBMITTALS AND ARE THE RESPONSIBILITY OF THE CONTRACTOR. DEFERRED SUBMITTAL ITEMS ARE NOT DESIGNED BY THE ENGINEER OF RECORD, REFER TO STRUCTURAL NOTES, SHEET GS-1 AND PROJECT SPECIFICATIONS FOR ADDITIONAL INFORMATION.
2. COORDINATE LOCATION OF SLIDE GATES WITH MECHANICAL.
3. ALL CORNERS AND INTERSECTIONS SHALL HAVE "ADDED" WALL REINFORCEMENT AS SHOWN ON STANDARD DETAILS 3001 & 3002.
4. SEE ARCHITECTURAL DRAWINGS FOR EXTENT OF TEXTURED CONCRETE WALL AREAS. COORDINATE WALL REINFORCEMENT WITH STANDARD DETAIL 03040 TO ENSURE PROPER CONCRETE COVER.
5. GRADE ELEVATIONS ARE FOR REFERENCE ONLY. SEE CIVIL DRAWINGS FOR FINISHED ELEVATIONS.
6. APPLY PVC LINING SYSTEM AS INDICATED. REFER TO TECHNICAL SPECIFICATION FOR ADDITIONAL INFORMATION.

RECORD DRAWING

THIS RECORD DRAWING HAS BEEN PREPARED FROM THE ORIGINAL CONTRACT DOCUMENTS SIGNED AND SEALED BY THE RESPONSIBLE ENGINEER OF RECORD. ADDITIONAL INFORMATION HAS BEEN PROVIDED BY OTHERS TO REPRESENT AS-CONSTRUCTED CONDITION AND IS SHOWN ON THESE RECORD DRAWINGS. THE RESPONSIBLE ENGINEER OF RECORD CANNOT VERIFY THE ACCURACY OF THE AS-CONSTRUCTED CONDITION INFORMATION REPRESENTED ON THE RECORD DRAWINGS.

0" — 1" VERIFY SCALES BAR IS ONE INCH LONG ON FULL SIZE DRAWING. IF NOT ONE INCH LONG ON THIS DRAWING, ADJUST SCALES ACCORDINGLY

TJC and ASSOCIATES, INC.

Woodard & Curran

REV	DATE	BY	APVD	DESCRIPTION

DESIGNED	RKT
DRAWN	ADM
CHECKED	DMY

SUBMITTED: MARK TAKEMOTO, RMC PROJECT ENGINEER CE-64369

APPROVED: STEVE CLARY, RMC ENGINEER CE-30318

SAUSALITO · MARIN CITY SANITARY DISTRICT

TREATMENT AND WET WEATHER FLOW UPGRADE

HEADWORKS/EQ BASIN SECTIONS & DETAILS

DWG NO	S100-11
SHEET NO	OF 226
PROJ NO	055-006
DATE	JULY 2022

FILENAME: 0055-006-S100-11 9-19-22 01:15pm BeeVue || XREFS:| X-SMCSD-TBLK | S-HEADWORKS-SECT |<<--

Last Saved By: BeeVue 9-19-22 01:14pm

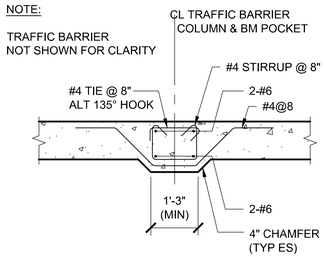

THICKENED SECTION
UNDER BARRIER RAIL POSTS

DETAIL 5
SCALE: 1/2"=1'-0" S100-4

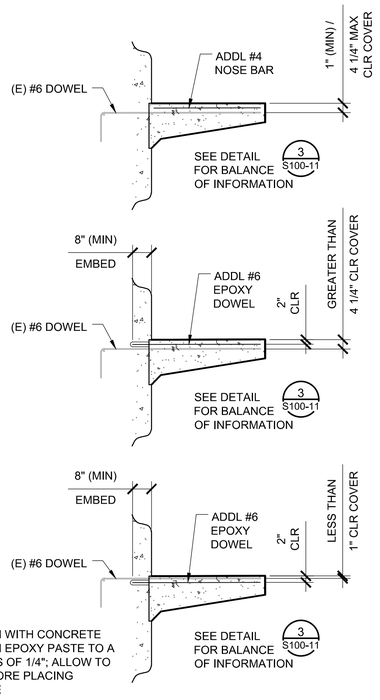

DETAIL 6
SCALE: 3/8"=1'-0" VAR

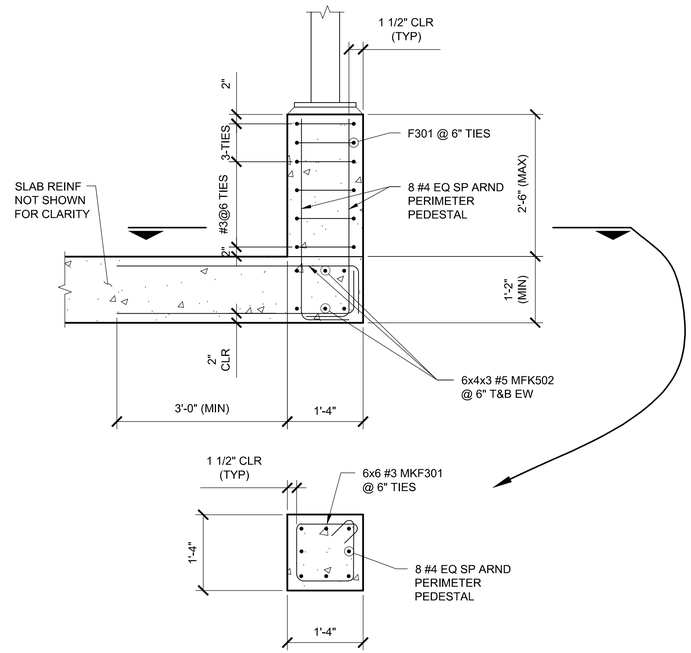

(TYPICAL AT 6 LOCATIONS)

DETAIL 7
SCALE: 3/4"=1'-0" S100-4

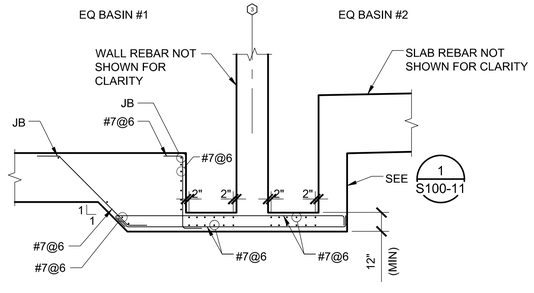

SECTION A
SCALE: NTS S100-1

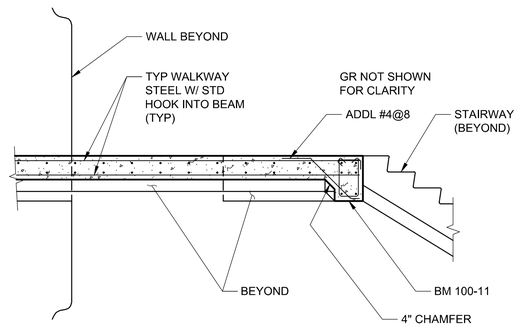

SECTION B
SCALE: 3/8"=1'-0" S100-2

RECORD DRAWING
THIS RECORD DRAWING HAS BEEN PREPARED FROM THE ORIGINAL CONTRACT DOCUMENTS SIGNED AND SEALED BY THE RESPONSIBLE ENGINEER OF RECORD. ADDITIONAL INFORMATION HAS BEEN PROVIDED BY OTHERS TO REPRESENT AS-CONSTRUCTED CONDITION AND IS SHOWN ON THESE RECORD DRAWINGS. THE RESPONSIBLE ENGINEER OF RECORD CANNOT VERIFY THE ACCURACY OF THE AS-CONSTRUCTED CONDITION INFORMATION REPRESENTED ON THE RECORD DRAWINGS.

0" 1"
VERIFY SCALES
BAR IS ONE INCH
LONG ON FULL
SIZE DRAWING.
IF NOT ONE INCH
LONG ON THIS
DRAWING, ADJUST
SCALES ACCORDINGLY

TJC and ASSOCIATES

Woodard & Curran

REV	DATE	BY	APVD	DESCRIPTION

DESIGNED	RKT
DRAWN	ADM
CHECKED	DMY

SUBMITTED: MARK TAKEMOTO
RMC PROJECT ENGINEER CE-64369

APPROVED: STEVE CLARY
RMC ENGINEER CE-30318

SAUSALITO · MARIN CITY SANITARY DISTRICT

TREATMENT AND WET WEATHER FLOW UPGRADE

HEADWORKS/EQ BASIN
SECTIONS & DETAILS

DWG NO	S100-12
SHEET NO	OF 226
PROJ NO	055-006
DATE	JULY 2022

FILENAME: 055-006-S100-12 9-19-22 01:14pm BeeVue || XREFs:| X-SMCSD-TBLK | S-HEADWORKS-SECT |<<--

Last Saved By: BeeVue 9-19-22 01:14pm

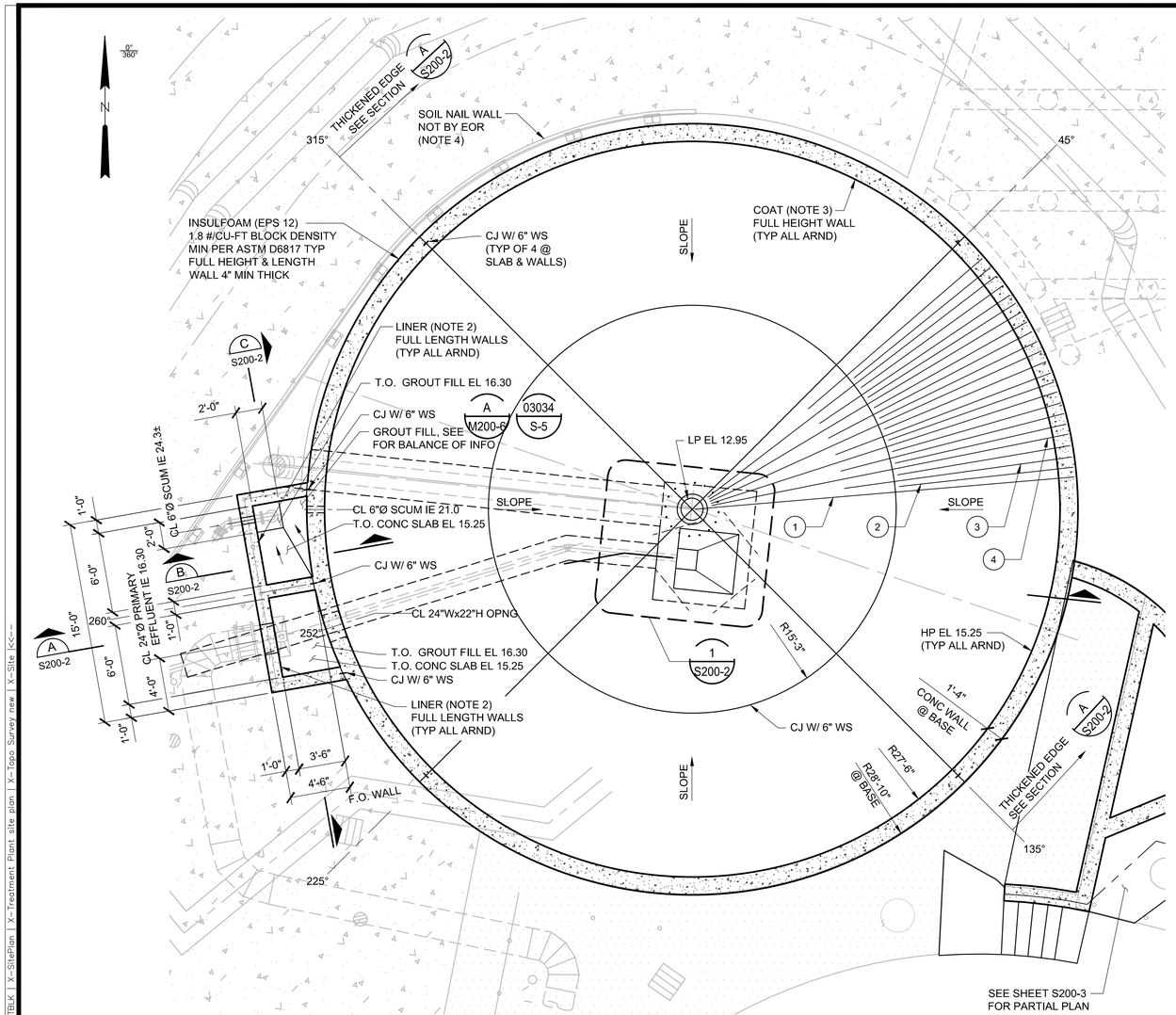

BAR SCHEDULE BOTTOM MAT

MARK	SIZE	COUNT	LENGTH	COMMENT
1	#6	16	30'-7"	NOTES 1 & 2
2	#8	174	15'-2"	NOTES 1 & 2
3	#6	87	19'-4"	NOTES 1 & 2
4	#6	71	29'-4"	NOTES 1 & 2

BAR SCHEDULE TOP MAT

MARK	SIZE	COUNT	LENGTH	COMMENT
1	#6	16	30'-7"	NOTES 1 & 2
2	#6	174	15'-2"	NOTES 1 & 2
3	#6	87	19'-4"	NOTES 1 & 2
4	#6	71	29'-4"	NOTES 1 & 2

BAR SCHEDULE NOTES:

1. LENGTHS SHOWN ARE APPROXIMATE, CONTRACTOR IS RESPONSIBLE FOR VERIFYING BAR LENGTHS PRIOR TO FABRICATION AND DELIVERY TO PROJECT SITE.
2. BARS SHALL BE EQUALLY SPACED AROUND PERIMETER OF THE TANK IN THE PATTERN DETAILED ON THE PLAN.
3. REFER TO STANDARD DETAIL 03003 S-4 FOR REQUIREMENTS AT CONSTRUCTION JOINT.
4. TRIM BARS, AS REQUIRED, AT SLUDGE HOPPER AND PRIMARY INFLUENT PIPE PENETRATION.

PRIMARY CLARIFIER NO.2 FOUNDATION PLAN

SCALE: 3/16"=1'-0"

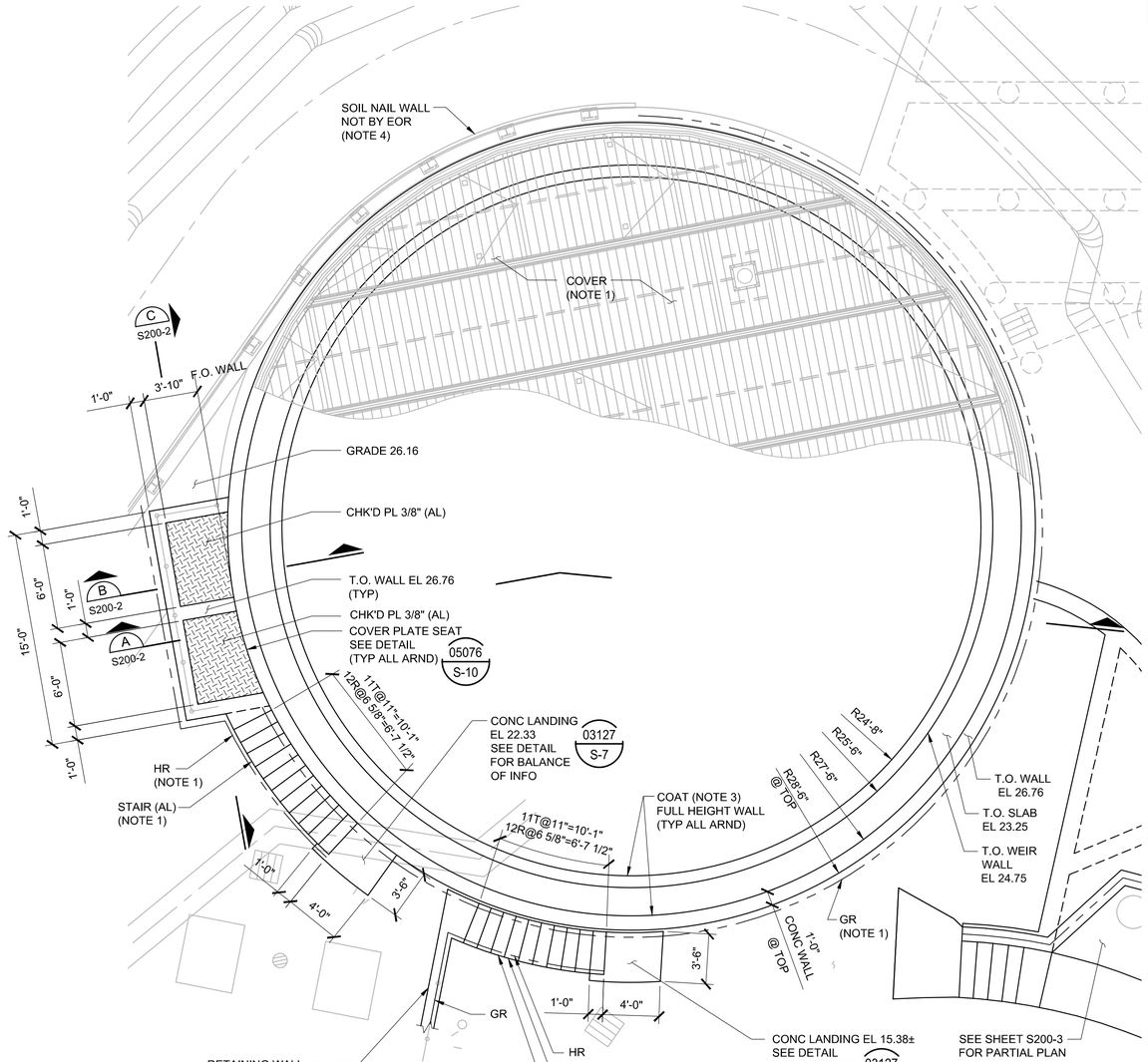

NOTES:

1. CLARIFIER COVER, METAL STAIR, HANDRAIL AND GUARD RAIL ARE DEFERRED SUBMITTAL ITEMS AND ARE THE RESPONSIBILITY OF THE CONTRACTOR. DEFERRED SUBMITTAL ITEMS HAVE NOT BEEN DESIGNED BY THE ENGINEER OF RECORD, REFER TO CONTRACT DOCUMENTS FOR ADDITIONAL INFORMATION.
2. APPLY PVC LINING SYSTEM TO OUTER WALL OF EFFLUENT TROUGH, EFFLUENT AND SCUM BOX, AND ANY EXPOSED CONCRETE ABOVE WATER LINE. REFER TO TECHNICAL SPECIFICATION FOR ADDITIONAL INFORMATION.
3. APPLY COATING SYSTEM (ENDURAFLEX 1988 100 MILS) AS INDICATED. REFER TO TECHNICAL SPECIFICATIONS FOR ADDITIONAL INFORMATION.
4. ANCHOR DOWELS/ANCHORAGE DEVICE SHALL NOT BE EMBEDDED WITHIN THE CONCRETE STRUCTURE.

PRIMARY CLARIFIER NO.2 TOP PLAN

SCALE: 3/16"=1'-0"

RECORD DRAWING
THIS RECORD DRAWING HAS BEEN PREPARED FROM THE ORIGINAL CONTRACT DOCUMENTS SIGNED AND SEALED BY THE RESPONSIBLE ENGINEER OF RECORD. ADDITIONAL INFORMATION HAS BEEN PROVIDED BY OTHERS TO REPRESENT AS-CONSTRUCTED CONDITION AND IS SHOWN ON THESE RECORD DRAWINGS. THE RESPONSIBLE ENGINEER OF RECORD CANNOT VERIFY THE ACCURACY OF THE AS-CONSTRUCTED CONDITION INFORMATION REPRESENTED ON THE RECORD DRAWINGS.

0" 1" VERIFY SCALES BAR IS ONE INCH LONG ON FULL SIZE DRAWING. IF NOT ONE INCH LONG ON THIS DRAWING, ADJUST SCALES ACCORDINGLY

TJC and ASSOCIATES, INC.

Woodard & Curran

REV	DATE	BY	APVD	DESCRIPTION

DESIGNED	RKT
DRAWN	ADM
CHECKED	DMY

SUBMITTED: MARK TAKEMOTO, RMC PROJECT ENGINEER CE-64369

APPROVED: STEVE CLARY, RMC ENGINEER CE-30318

SAUSALITO · MARIN CITY SANITARY DISTRICT

TREATMENT AND WET WEATHER FLOW UPGRADE

PRIMARY CLARIFIER NO.2 FOUNDATION AND TOP PLANS

DWG NO	S200-1
SHEET NO	OF 226
PROJ NO	055-006
DATE	JULY 2022

FILENAME: 0055-006-S200-01 | 9-19-22 01:13pm BeeVue || XREFS: | S-TANK-PLAN | X-SMCSD-TBLK | X-SitePlan | X-Treatment Plant site plan | X-Topo Survey new | X-Site |<<--

Last Saved By: BeeVue 9-19-22 01:13pm

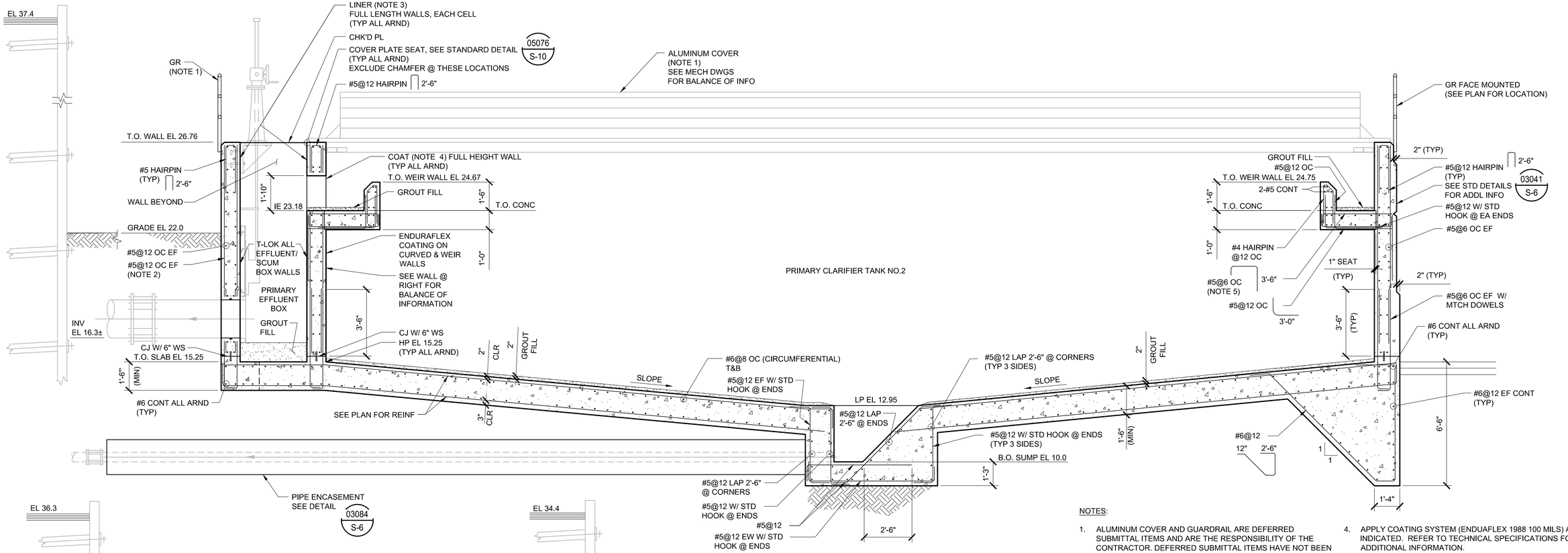

NOTES:

1. ALUMINUM COVER AND GUARDRAIL ARE DEFERRED SUBMITTAL ITEMS AND ARE THE RESPONSIBILITY OF THE CONTRACTOR. DEFERRED SUBMITTAL ITEMS HAVE NOT BEEN DESIGNED BY THE ENGINEER OF RECORD, REFER TO CONTRACT DOCUMENTS FOR ADDITIONAL INFORMATION.
2. JOG IN BARS ARE FOR PICTORIAL REPRESENTATION ONLY. BARS TO BE LAPPED SHALL BE STRAIGHT.
3. APPLY T-LOK LINING SYSTEM TO OUTER WALL OF EFFLUENT TROUGH, EFFLUENT AND SCUM BOX, AND ANY EXPOSED CONCRETE ABOVE WATER LINE. REFER TO TECHNICAL SPECIFICATIONS FOR ADDITIONAL INFORMATION.
4. APPLY COATING SYSTEM (ENDUAFLEX 1988 100 MILS) AS INDICATED. REFER TO TECHNICAL SPECIFICATIONS FOR ADDITIONAL INFORMATION.
5. AT CONTRACTOR'S OPTION MAY SUBSTITUTE FORM SAVERS IN-LIEU OF DOWELS.
6. CONTRACTOR SHALL VERIFY MINIMUM DIMENSION REQUIRED TO SATISFY ANCHORAGE EDGE DISTANCES PRIOR TO LOCATING SLUDGE HOPPER.

RECORD DRAWING
THIS RECORD DRAWING HAS BEEN PREPARED FROM THE ORIGINAL CONTRACT DOCUMENTS SIGNED AND SEALED BY THE RESPONSIBLE ENGINEER OF RECORD. ADDITIONAL INFORMATION HAS BEEN PROVIDED BY OTHERS TO REPRESENT AS-CONSTRUCTED CONDITION AND IS SHOWN ON THESE RECORD DRAWINGS. THE RESPONSIBLE ENGINEER OF RECORD CANNOT VERIFY THE ACCURACY OF THE AS-CONSTRUCTED CONDITION INFORMATION REPRESENTED ON THE RECORD DRAWINGS.

0" 1" VERIFY SCALES BAR IS ONE INCH LONG ON FULL SIZE DRAWING. IF NOT ONE INCH LONG ON THIS DRAWING, ADJUST SCALES ACCORDINGLY

TJC and ASSOCIATES, INC.

Woodard & Curran

REV	DATE	BY	APVD	DESCRIPTION

DESIGNED	RKT
DRAWN	ADM
CHECKED	DMY

SUBMITTED: MARK TAKEMOTO
RMC PROJECT ENGINEER CE-64369

APPROVED: STEVE CLARY
RMC ENGINEER CE-30318

SAUSALITO · MARIN CITY SANITARY DISTRICT

TREATMENT AND WET WEATHER FLOW UPGRADE

PRIMARY CLARIFIER NO. 2
SECTIONS AND DETAIL

DWG NO	S200-2
SHEET NO	OF 226
PROJ NO	055-006
DATE	JULY 2022

FILENAME: 0055-006-S200-02 9-19-22 01:13pm BeeVue || XREFS: X-SMCSD-TBLK | S-TANK-SECT | S-TANK-PLAN |<<--

Last Saved By: BeeVue 9-19-22 01:12pm

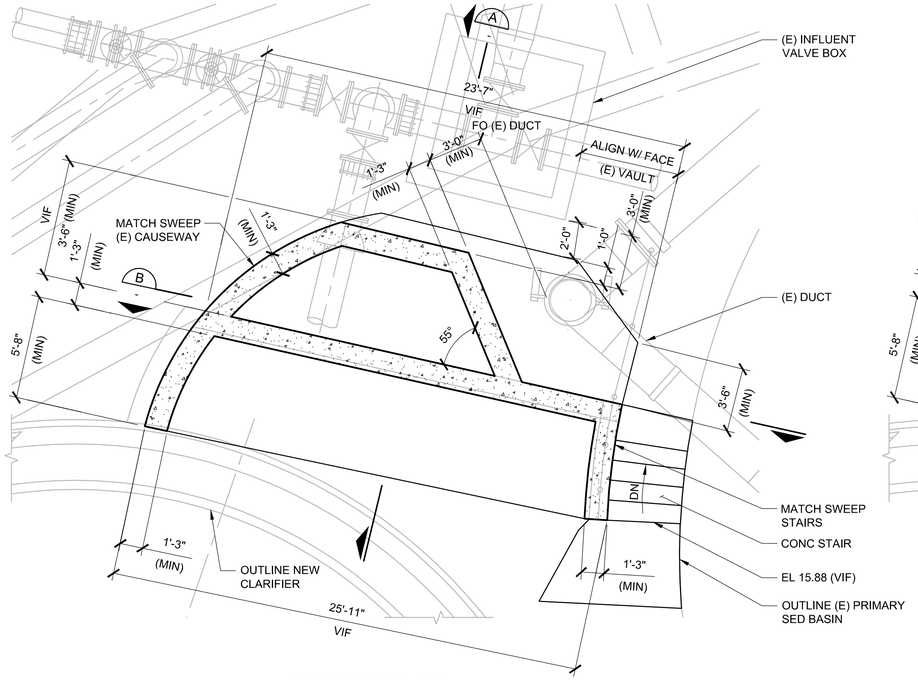

BOTTOM PLAN

SCALE: 1"=50'

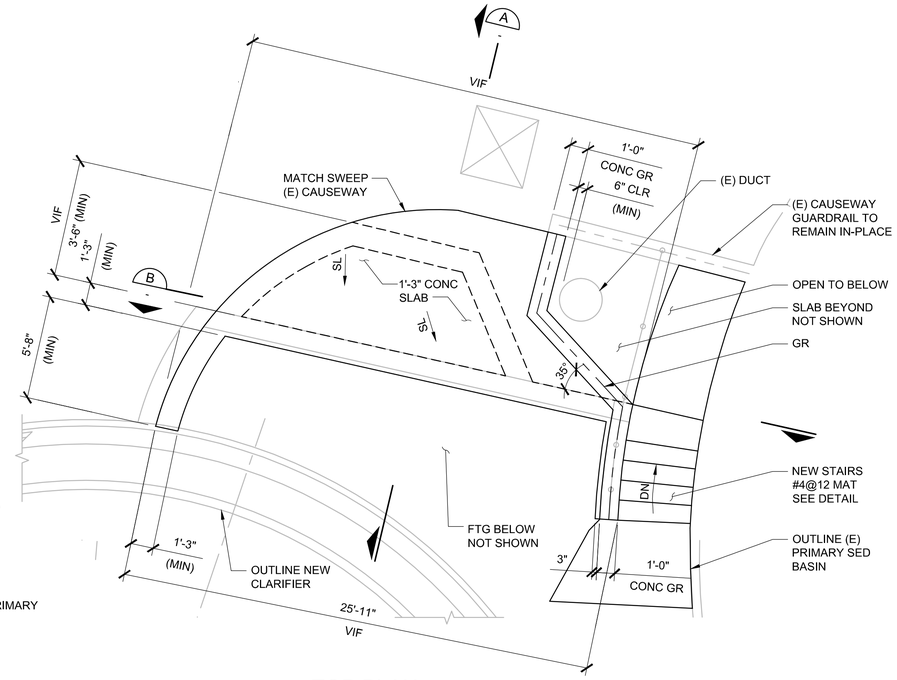

TOP PLAN

SCALE: 1"=50'



PHOTO 1

SCALE: NTS

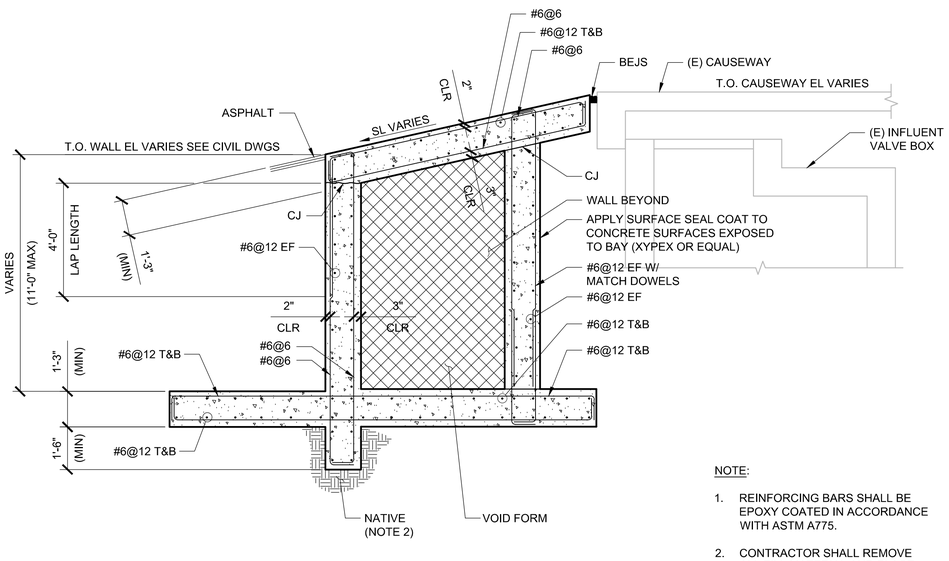

SECTION A

SCALE: 3/8"=1'-0"

NOTE:

1. REINFORCING BARS SHALL BE EPOXY COATED IN ACCORDANCE WITH ASTM A775.
2. CONTRACTOR SHALL REMOVE ALL FILL MATERIAL AND PLACE CONCRETE FOOTING ON NATIVE MATERIAL.

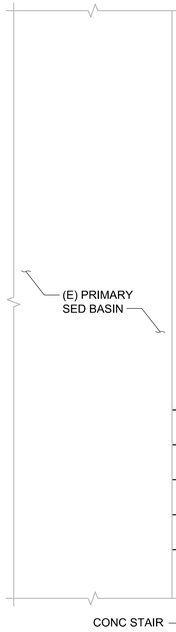

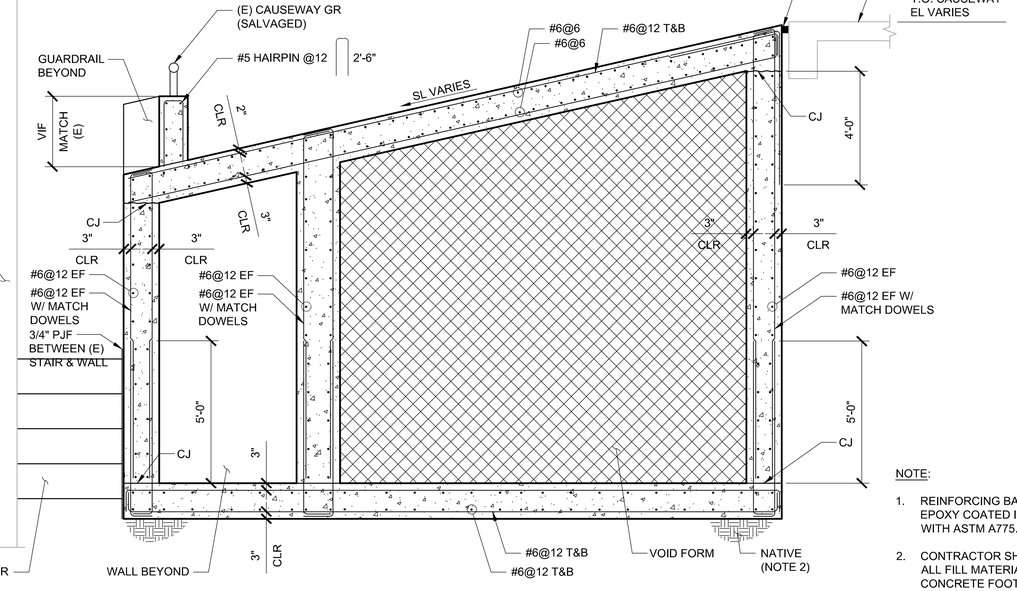

SECTION B

SCALE: 3/8"=1'-0"

NOTE:

1. REINFORCING BARS SHALL BE EPOXY COATED IN ACCORDANCE WITH ASTM A775.
2. CONTRACTOR SHALL REMOVE ALL FILL MATERIAL AND PLACE CONCRETE FOOTING ON NATIVE MATERIAL.

RECORD DRAWING

THIS RECORD DRAWING HAS BEEN PREPARED FROM THE ORIGINAL CONTRACT DOCUMENTS SIGNED AND SEALED BY THE RESPONSIBLE ENGINEER OF RECORD. ADDITIONAL INFORMATION HAS BEEN PROVIDED BY OTHERS TO REPRESENT AS-CONSTRUCTED CONDITION AND IS SHOWN ON THESE RECORD DRAWINGS. THE RESPONSIBLE ENGINEER OF RECORD CANNOT VERIFY THE ACCURACY OF THE AS-CONSTRUCTED CONDITION INFORMATION REPRESENTED ON THE RECORD DRAWINGS.

0" — 1"
VERIFY SCALES
BAR IS ONE INCH
LONG ON FULL
SIZE DRAWING.
IF NOT ONE INCH
LONG ON THIS
DRAWING, ADJUST
SCALES ACCORDINGLY

TJC and ASSOCIATES, INC.

Woodard & Curran

REV	DATE	BY	APVD	DESCRIPTION

DESIGNED	RKT
DRAWN	BV
CHECKED	TJC

SUBMITTED: MARK TAKEMOTO
RMC PROJECT ENGINEER CE-64369

APPROVED: STEVE CLARY
RMC ENGINEER CE-30318

SAUSALITO · MARIN CITY SANITARY DISTRICT

TREATMENT AND WET WEATHER FLOW UPGRADE

RETAINING WALL AT CAUSEWAY PLANS, SECTIONS AND PHOTO

DWG NO	S200-3
SHEET NO	OF 226
PROJ NO	055-006
DATE	JULY 2022

FILENAME: 055-006-S200-03 9-19-22 01:12pm BeeVue || XREFS: | X-Treatment Plant site plan | X-Site | X-Topo Survey | X-SMCSD-TBLK <<--

Last Saved By: BeeVue 9-19-22 01:12pm

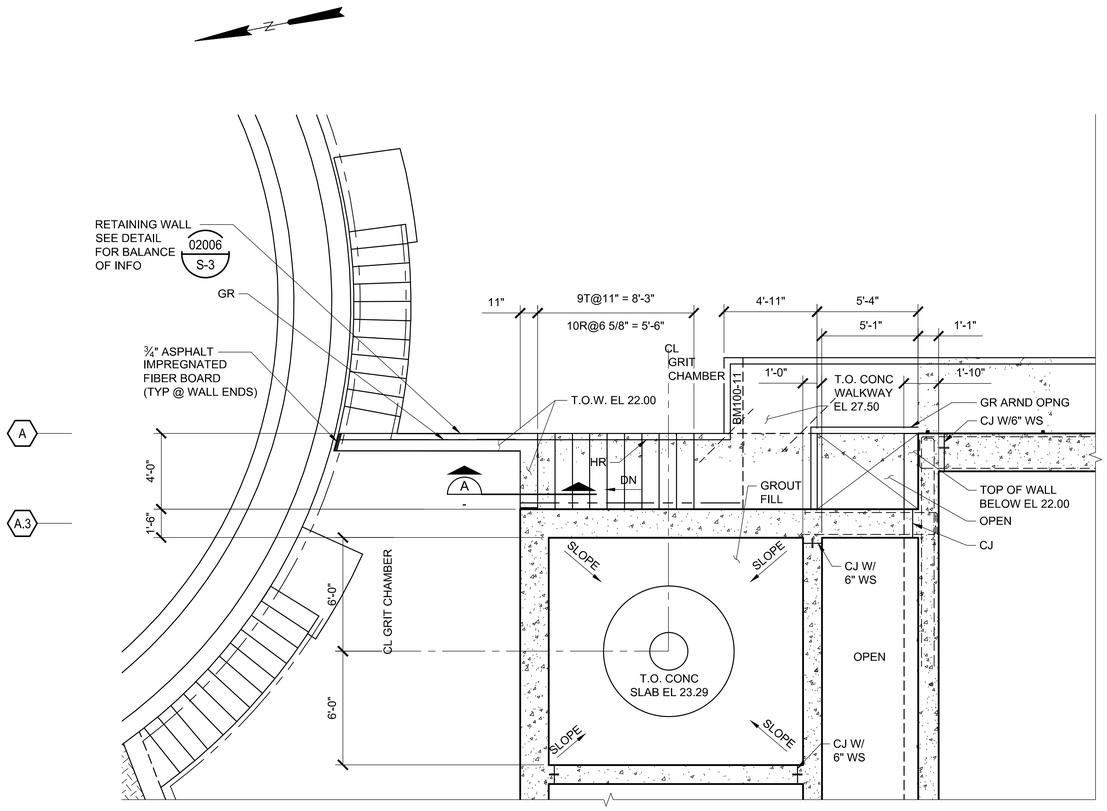

HEADWORKS/EQ BASIN FOUNDATION PLAN EL 29.50

SCALE: 1/4"=1'-0"

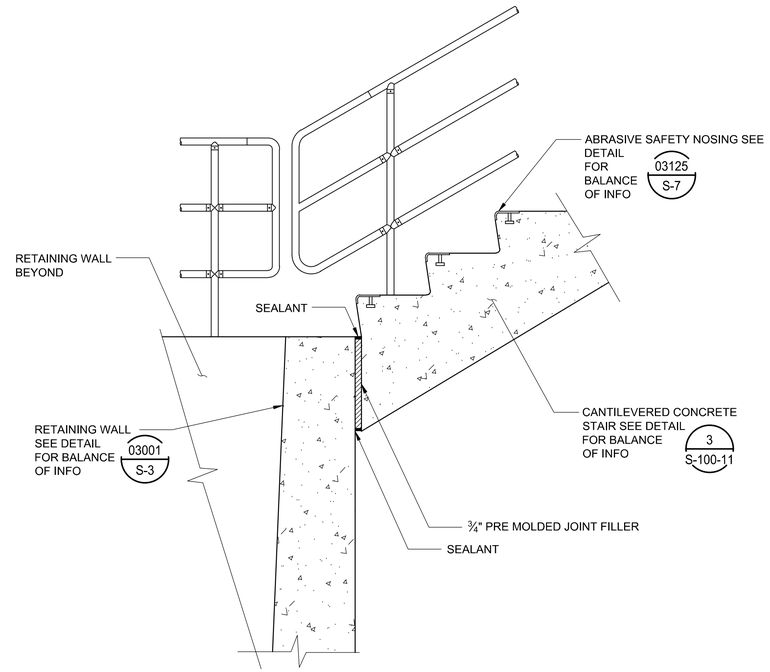

RW-1

DETAIL A

SCALE: 1"=1'-0"

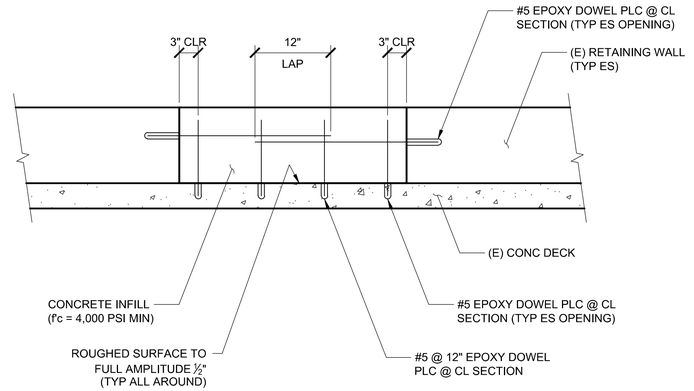

RW-2

DETAIL B

SCALE: 1"=1'-0"

RECORD DRAWING

THIS RECORD DRAWING HAS BEEN PREPARED FROM THE ORIGINAL CONTRACT DOCUMENTS SIGNED AND SEALED BY THE RESPONSIBLE ENGINEER OF RECORD. ADDITIONAL INFORMATION HAS BEEN PROVIDED BY OTHERS TO REPRESENT AS-CONSTRUCTED CONDITION AND IS SHOWN ON THESE RECORD DRAWINGS. THE RESPONSIBLE ENGINEER OF RECORD CANNOT VERIFY THE ACCURACY OF THE AS-CONSTRUCTED CONDITION INFORMATION REPRESENTED ON THE RECORD DRAWINGS.

0" 1" VERIFY SCALES BAR IS ONE INCH LONG ON FULL SIZE DRAWING. IF NOT ONE INCH LONG ON THIS DRAWING, ADJUST SCALES ACCORDINGLY

TJC and ASSOCIATES, Inc.

Woodard & Curran

REV	DATE	BY	APVD	DESCRIPTION

DESIGNED	RKT
DRAWN	ADM
CHECKED	DMY

SUBMITTED: MARK TAKEMOTO, RMC PROJECT ENGINEER CE-64369

APPROVED: STEVE CLARY, RMC ENGINEER CE-30318

SAUSALITO · MARIN CITY SANITARY DISTRICT

TREATMENT AND WET WEATHER FLOW UPGRADE

HEADWORKS FOUNDATION PARTIAL PLAN EL 29.50

DWG NO	S200-4
SHEET NO	OF 226
PROJ NO	055-006
DATE	JULY 2022

FILENAME: 0055-006-S200-04 | 9-19-22 01:12pm BeeVue | XREFS:| X-SMCSD-TBLK | S-HEADWORKS-PLAN | X-SitePlan | X-Treatment Plant site plan | X-Topo Survey new | S-TANK-PLAN |<<--

Last Saved By: BeeVue 9-19-22 01:12pm

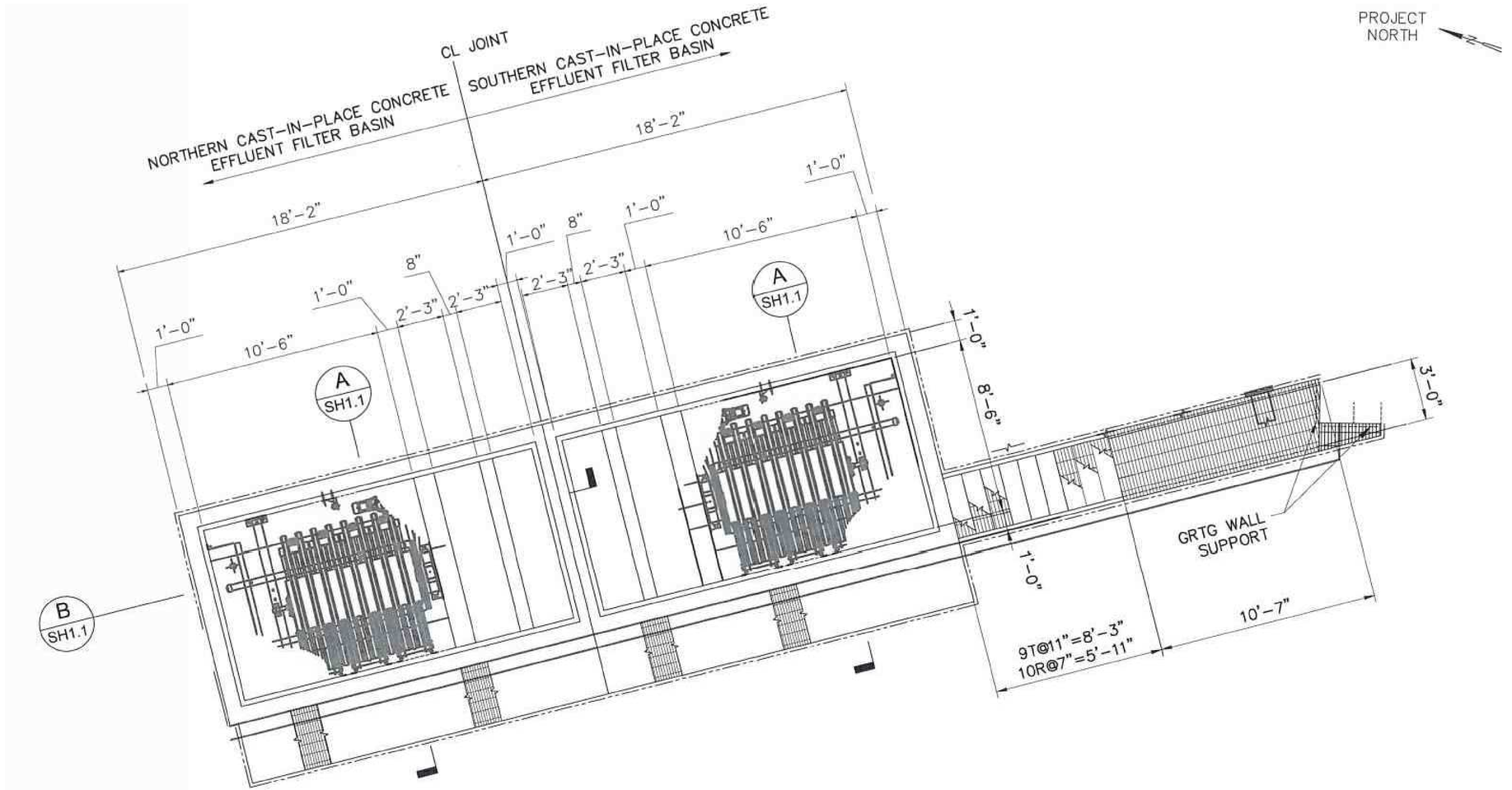

1 PLAN

SCALE: NTS

NOTE:

1. ZENITH HAS PRODUCED CAST-IN-PLACE CONCRETE EFFLUENT FILTER BASIN DRAWINGS USING PROJECT CONTRACT DRAWINGS S400-1 & S400-2 AS BACKGROUND.
2. ZENITH'S SCOPE OF WORK IS RESTRICTED TO ENGINEERING OF NEW CAST-IN-PLACE CONCRETE EFFLUENT FILTER BASINS, WHICH ARE LOCATED ON TOP OF AN EXISTING STRUCTURE. ZENITH HAS NOT VERIFIED THIS EXISTING STRUCTURE'S CAPACITY AND THE CAPACITY OF THE SOIL BENEATH THE EXISTING STRUCTURE.
3. IT IS BROUGHT TO THE ATTENTION OF RMC AND CONTRACTOR THAT NEW STRUCTURE MAY NEED TO BE DOWELED INTO THE EXISTING STRUCTURE TO RESIST SEISMIC INDUCED LATERAL LOADS.

NOTES:

1. PRECAST CONCRETE EFFLUENT BASINS, PLANK GRATING, GUARDRAIL, AND METAL STAIRS ARE DEFERRED SUBMITTAL ITEMS AND ARE THE RESPONSIBILITY OF THE CONTRACTOR. DEFERRED SUBMITTAL ITEMS HAVE NOT BEEN DESIGNED BY THE ENGINEER OF RECORD, REFER TO CONTRACT DOCUMENTS FOR ADDITIONAL INFORMATION.
2. PRECAST EFFLUENT FILTER BASINS:
   a. PRECAST EFFLUENT FILTER BASINS ARE DEFERRED SUBMITTAL ITEMS AND ARE THE RESPONSIBILITY OF THE CONTRACTOR. A DEFERRED SUBMITTAL ITEM HAS NOT BEEN DESIGNED BY THE ENGINEER OF RECORD, REFER TO CONTRACT DOCUMENTS FOR ADDITIONAL INFORMATION.
   b. UNLESS OTHERWISE NOTED, PRECAST EFFLUENT FILTER BASINS SHALL BE STAMPED AND SIGNED BY A PROFESSIONAL CIVIL OR STRUCTURAL ENGINEER REGISTERED IN THE STATE OF CALIFORNIA.
   c. PRECAST EFFLUENT FILTER BASINS WHICH ARE DAMAGED DURING SHIPMENT OR INSTALLATION, IN THE OPINION OF THE ENGINEER, WILL BE REJECTED. IT SHALL BE THE RESPONSIBILITY OF THE CONTRACTOR TO REPLACE DAMAGED ELEMENTS AT HIS/HER EXPENSE.
   d. APPROPRIATE SIZING AND LOCATION OF LIFTING DEVICES SHALL BE THE RESPONSIBILITY OF THE FABRICATOR.
   e. CONTRACTOR SHALL PATCH ALL LIFTING DEVICE HOLES IN ACCORDANCE WITH PROJECT SPECIFICATIONS, WITH A MINIMUM OF 1-INCH OF COVER OVER HARDWARE TO BE LEFT IN-PLACE BOTH TOP AND BOTTOM.
3. ZENITH SHOP DRAWINGS SEALED BY SENTHIL PULIYADI (C71630).

RECORD DRAWING
THIS RECORD DRAWING HAS BEEN PREPARED FROM THE ORIGINAL CONTRACT DOCUMENTS SIGNED AND SEALED BY THE RESPONSIBLE ENGINEER OF RECORD. ADDITIONAL INFORMATION HAS BEEN PROVIDED BY OTHERS TO REPRESENT AS-CONSTRUCTED CONDITION AND IS SHOWN ON THESE RECORD DRAWINGS. THE RESPONSIBLE ENGINEER OF RECORD CANNOT VERIFY THE ACCURACY OF THE AS-CONSTRUCTED CONDITION INFORMATION REPRESENTED ON THE RECORD DRAWINGS.

0" 1" VERIFY SCALES — BAR IS ONE INCH LONG ON FULL SIZE DRAWING. IF NOT ONE INCH LONG ON THIS DRAWING, ADJUST SCALES ACCORDINGLY

Woodard & Curran

REV	DATE	BY	APVD	DESCRIPTION
1				
2				
3				
4				
5				

DESIGNED	WK
DRAWN	PR
CHECKED	SP
ENGINEER OF RECORD: SENTHIL PULIYADI	R.C.E # C71630

SUBMITTED: MARK TAKEMOTO, RMC PROJECT ENGINEER CE-64369

APPROVED: STEVE CLARY, RMC ENGINEER CE-30318

SAUSALITO · MARIN CITY SANITARY DISTRICT

TREATMENT AND WET WEATHER FLOW UPGRADE

EFFLUENT FILTERS PLAN

DWG NO	S400-1
SHEET NO	OF 226
PROJ NO	055-006
DATE	JULY 2022

FILENAME: 055-006-S400-01 9-19-22 01:11pm BeeVue || XREFS:| X-SMCSD-TBLK |<<--

Last Saved By: BeeVue 9-19-22 01:11pm

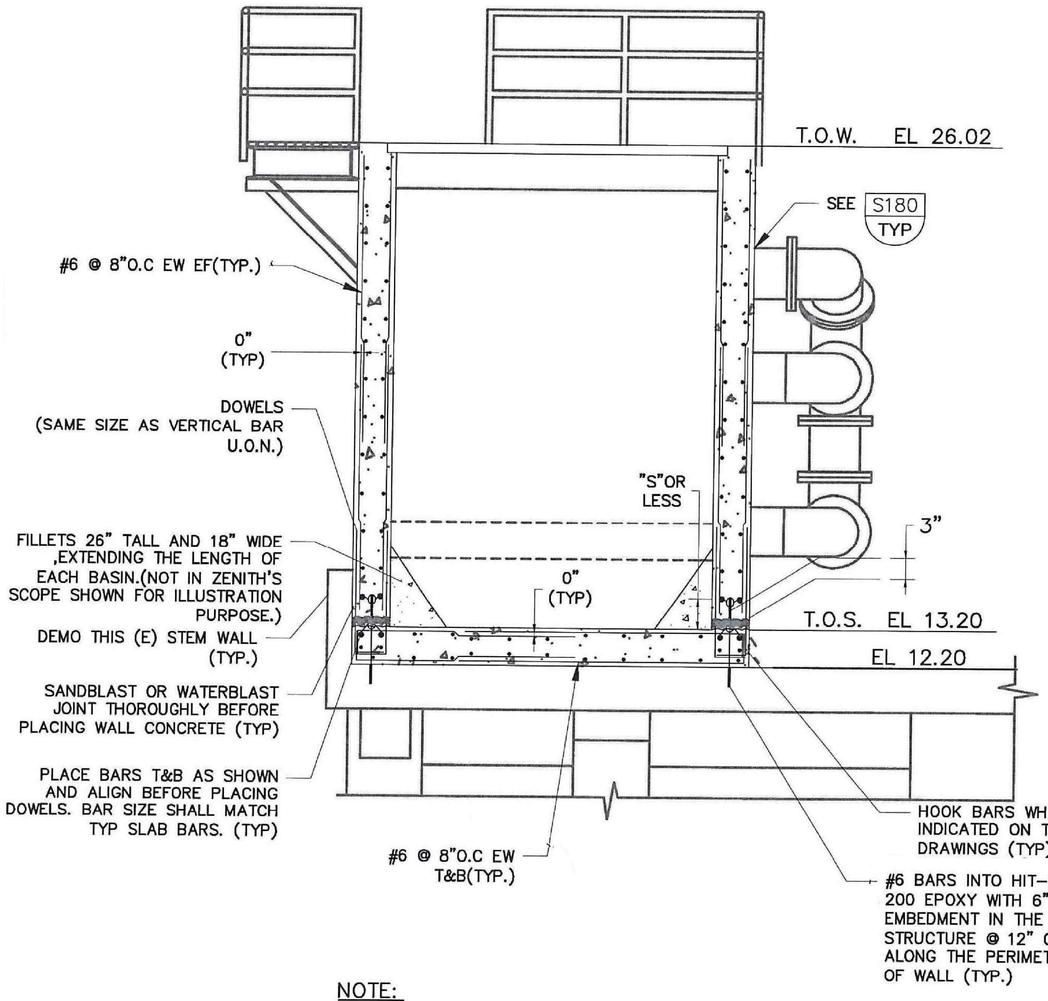

NOTE:

1. "S" = BAR SPACING INDICATED ON THE DRAWINGS.

A / SH1.0 SECTION

SCALE: NTS

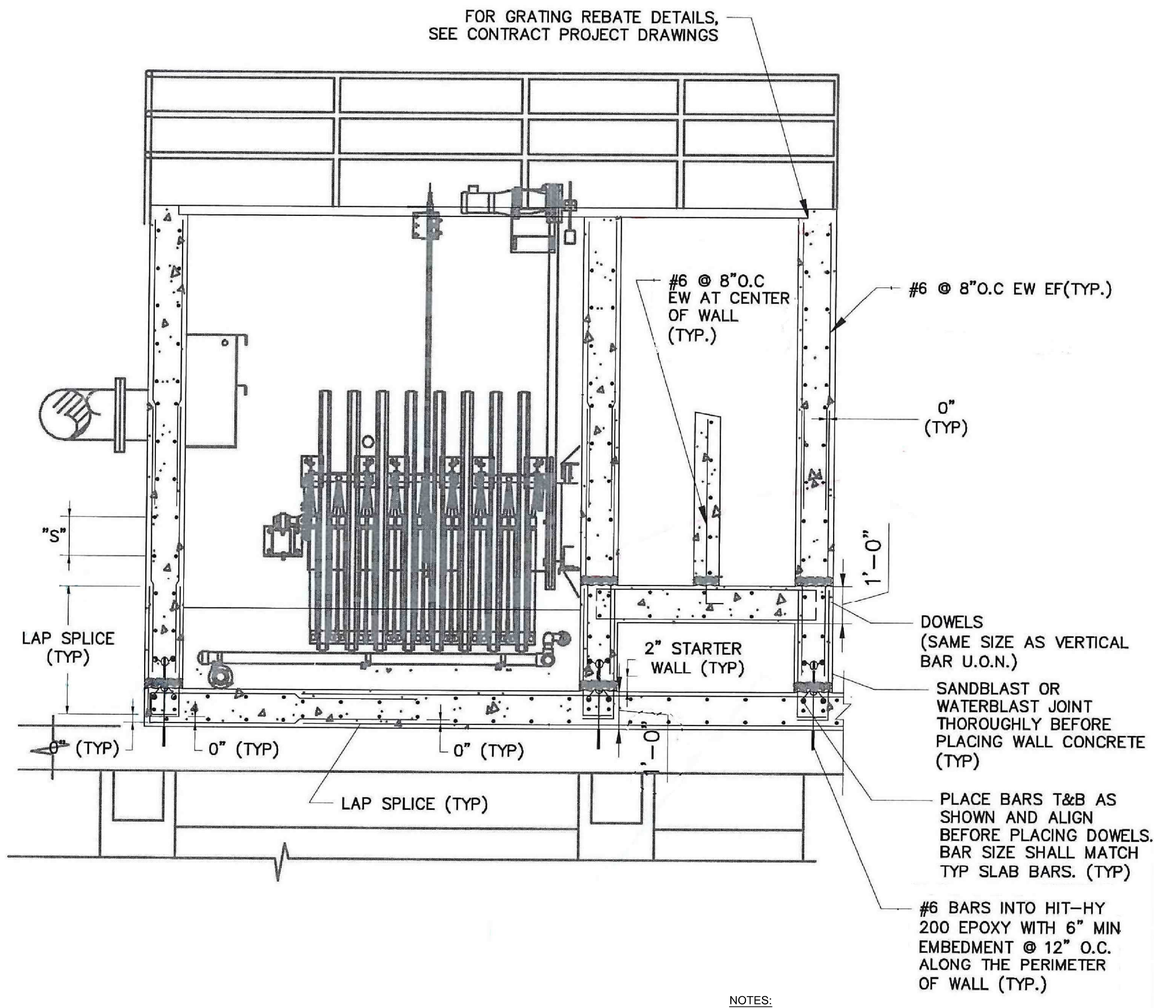

B / SH1.0 SECTION

SCALE: NTS

NOTES:

1. PRECAST CONCRETE EFFLUENT BASINS, PLANK GRATING, GUARDRAIL, AND METAL STAIRS ARE DEFERRED SUBMITTAL ITEMS AND ARE THE RESPONSIBILITY OF THE CONTRACTOR. DEFERRED SUBMITTAL ITEMS HAVE NOT BEEN DESIGNED BY THE ENGINEER OF RECORD, REFER TO CONTRACT DOCUMENTS FOR ADDITIONAL INFORMATION.
2. PRECAST EFFLUENT FILTER BASINS:
   a. PRECAST EFFLUENT FILTER BASINS ARE DEFERRED SUBMITTAL ITEMS AND ARE THE RESPONSIBILITY OF THE CONTRACTOR. A DEFERRED SUBMITTAL ITEM HAS NOT BEEN DESIGNED BY THE ENGINEER OF RECORD, REFER TO CONTRACT DOCUMENTS FOR ADDITIONAL INFORMATION.
   b. UNLESS OTHERWISE NOTED, PRECAST EFFLUENT FILTER BASINS SHALL BE STAMPED AND SIGNED BY A PROFESSIONAL CIVIL OR STRUCTURAL ENGINEER REGISTERED IN THE STATE OF CALIFORNIA.
   c. PRECAST EFFLUENT FILTER BASINS WHICH ARE DAMAGED DURING SHIPMENT OR INSTALLATION, IN THE OPINION OF THE ENGINEER, WILL BE REJECTED. IT SHALL BE THE RESPONSIBILITY OF THE CONTRACTOR TO REPLACE DAMAGED ELEMENTS AT HIS/HER EXPENSE.
   d. APPROPRIATE SIZING AND LOCATION OF LIFTING DEVICES SHALL BE THE RESPONSIBILITY OF THE FABRICATOR.
   e. CONTRACTOR SHALL PATCH ALL LIFTING DEVICE HOLES IN ACCORDANCE WITH PROJECT SPECIFICATIONS, WITH A MINIMUM OF 1-INCH OF COVER OVER HARDWARE TO BE LEFT IN-PLACE BOTH TOP AND BOTTOM.
3. ZENITH SHOP DRAWINGS SEALED BY SENTHIL PULIYADI (C71630).

RECORD DRAWING
THIS RECORD DRAWING HAS BEEN PREPARED FROM THE ORIGINAL CONTRACT DOCUMENTS SIGNED AND SEALED BY THE RESPONSIBLE ENGINEER OF RECORD. ADDITIONAL INFORMATION HAS BEEN PROVIDED BY OTHERS TO REPRESENT AS-CONSTRUCTED CONDITION AND IS SHOWN ON THESE RECORD DRAWINGS. THE RESPONSIBLE ENGINEER OF RECORD CANNOT VERIFY THE ACCURACY OF THE AS-CONSTRUCTED CONDITION INFORMATION REPRESENTED ON THE RECORD DRAWINGS.

0" 1" — VERIFY SCALES BAR IS ONE INCH LONG ON FULL SIZE DRAWING. IF NOT ONE INCH LONG ON THIS DRAWING, ADJUST SCALES ACCORDINGLY

Woodard & Curran

REV	DATE	BY	APVD	DESCRIPTION

DESIGNED	WK
DRAWN	PR
CHECKED	SP
ENGINEER OF RECORD: SENTHIL PULIYADI	R.C.E # C716360

SUBMITTED: MARK TAKEMOTO, RMC PROJECT ENGINEER CE-64369

APPROVED: STEVE CLARY, RMC ENGINEER CE-30318

SAUSALITO · MARIN CITY SANITARY DISTRICT

TREATMENT AND WET WEATHER FLOW UPGRADE

EFFLUENT FILTERS SECTIONS

DWG NO	S400-2
SHEET NO	OF 226
PROJ NO	055-006
DATE	JULY 2022

FILENAME: 0055-006-S400-02 9-19-22 01:11pm BeeVue || XREFS|| X-SMCSD-TBLK ||<<--
Last Saved By: BeeVue 9-19-22 01:10pm

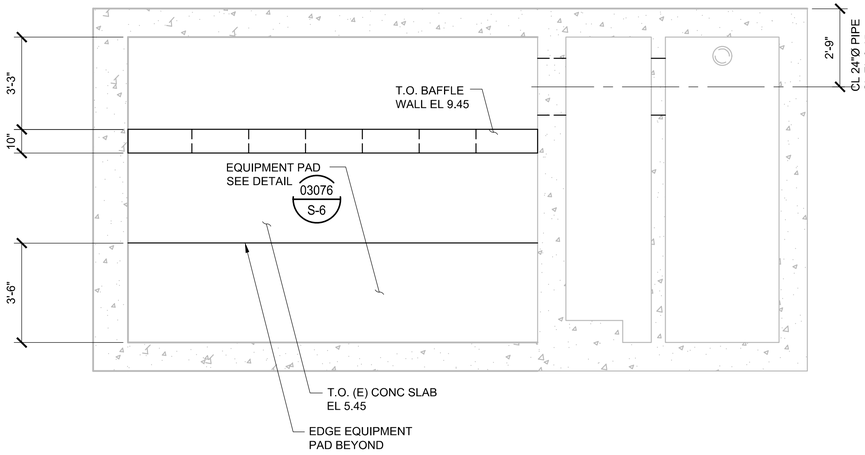

EFFLUENT FILTERS INTERMEDIATE PLAN

SCALE: 3/8"=1'-0"

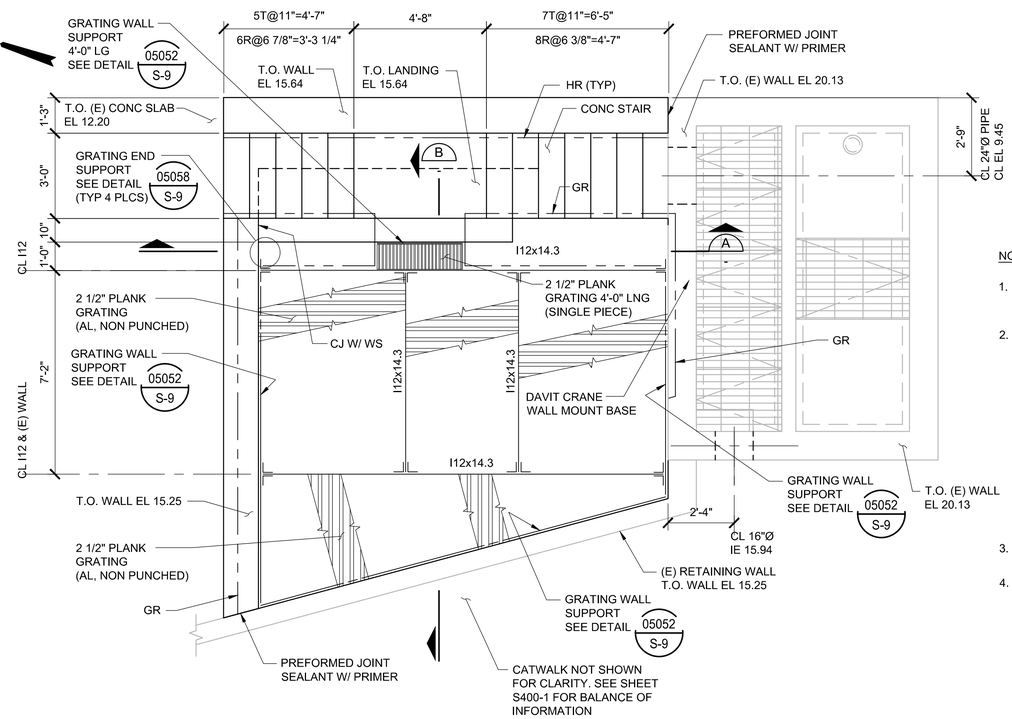

NOTES:

1. ALL MEMBER SIZES SHOWN ON SHEETS ARE MINIMUM SIZES. ACTUAL SIZES SHALL BE DETERMINED BY THE CONTRACTOR.
2. THE DESIGN OF STAIRS IS A DEFERRED SUBMITTAL ITEM AND IS THE RESPONSIBILITY OF THE CONTRACTOR. THE DEFERRED SUBMITTAL DESIGN SHALL BE SUBMITTED TO THE DESIGN PROFESSIONAL IN RESPONSIBLE CHARGE FOR REVIEW FOR GENERAL CONFORMANCE TO THE STRUCTURAL DESIGN CRITERIA. INSTALLATION OF THE STAIRS SHALL NOT BEGIN UNTIL THE SUBMITTAL HAS BEEN REVIEWED BY THE DESIGN PROFESSIONAL IN RESPONSIBLE CHARGE AND HAS BEEN FOUND TO BE IN GENERAL CONFORMANCE WITH THE DESIGN OF THE PROJECT AND THE SUBMITTAL HAS BEEN DEEMED ACCEPTABLE BY THE OWNER.
3. ALL MATERIALS FOR STAIRS SHALL BE ALUMINUM UON.
4. WIDTH OF STAIR SHOWN ON DRAWINGS IS THE DISTANCE BETWEEN STRINGERS.

EFFLUENT FILTERS TOP PLAN

SCALE: 3/8"=1'-0"

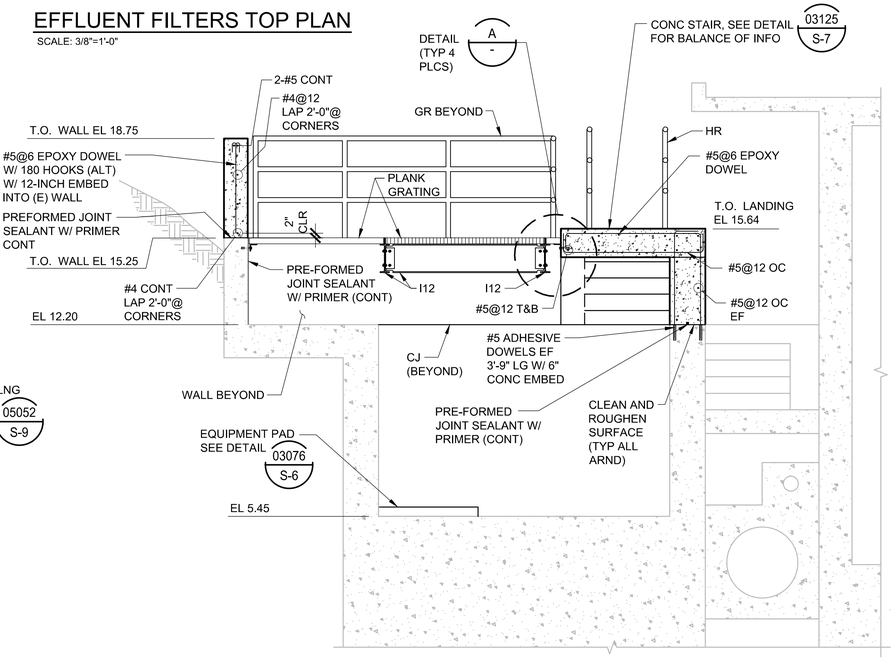

SECTION A

SCALE: 3/8"=1'-0"

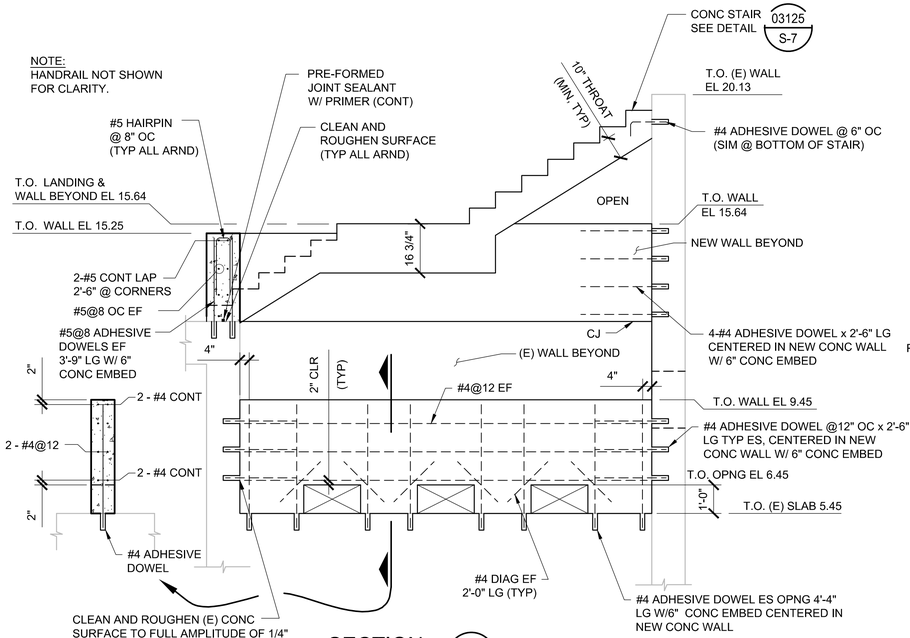

DETAIL A

SCALE: 1 1/2"=1'-0"

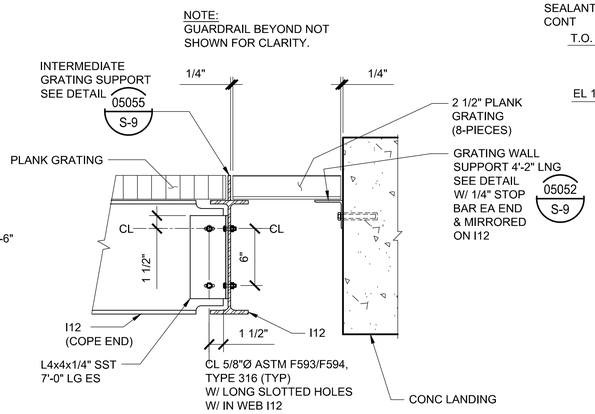

SECTION B

SCALE: 3/8"=1'-0"

RECORD DRAWING
THIS RECORD DRAWING HAS BEEN PREPARED FROM THE ORIGINAL CONTRACT DOCUMENTS SIGNED AND SEALED BY THE RESPONSIBLE ENGINEER OF RECORD. ADDITIONAL INFORMATION HAS BEEN PROVIDED BY OTHERS TO REPRESENT AS-CONSTRUCTED CONDITION AND IS SHOWN ON THESE RECORD DRAWINGS. THE RESPONSIBLE ENGINEER OF RECORD CANNOT VERIFY THE ACCURACY OF THE AS-CONSTRUCTED CONDITION INFORMATION REPRESENTED ON THE RECORD DRAWINGS.

0" 1" VERIFY SCALES
BAR IS ONE INCH
LONG ON FULL
SIZE DRAWING.
IF NOT ONE INCH
LONG ON THIS
DRAWING, ADJUST
SCALES ACCORDINGLY

TJC and ASSOCIATES, INC.

Woodard & Curran

REV	DATE	BY	APVD	DESCRIPTION

DESIGNED	RKT
DRAWN	ADM
CHECKED	DMY

SUBMITTED: MARK TAKEMOTO
RMC PROJECT ENGINEER CE-64369

APPROVED: STEVE CLARY
RMC ENGINEER CE-30318

SAUSALITO · MARIN CITY SANITARY DISTRICT

TREATMENT AND WET WEATHER FLOW UPGRADE

MISCELLANEOUS STAIRS

DWG NO	S400-3
SHEET NO	OF 226
PROJ NO	055-006
DATE	JULY 2022

FILENAME: 055-006-S400-03 9-19-22 01:06pm BeeVue | XREFS: X-SMCSD-TBLK | S-HEADWORKS-PLAN | X-SitePlan | S-EFFLNT_FLTRS-PLAN | S-EFFLNT_FLTRS-SECT | X-Topo Survey new | X-Treatment Plant site plan |<<--

Last Saved By: BeeVue 9-19-22 01:05pm